WIND-TUNNEL STUDY OF 1221 BRICKELL BUILDING, MIAMI

by

J. A. Peterka* and J. E. Cermak**

for

UrbanCore International, Inc.
50 West Mashta Drive
Suite 5
Key Biscayne, Florida 33149

Fluid Mechanics and Wind Engineering Program
Fluid Dynamics and Diffusion Laboratory
Department of Civil Engineering
Colorado State University
Fort Collins, Colorado 80523

Project 2-2 7460

July 1981

*Associate Professor
**Professor-in-Charge, Fluid Mechanics and Wind Engineering Program

CER81-82JAP-JEC2

U18401 0076087

TABLE OF CONTENTS

Chapter		Page
	LIST OF FIGURES	ii
	LIST OF TABLES	iii
	LIST OF SYMBOLS	iv
1	INTRODUCTION	1
	1.1 General	1
	1.2 The Wind-Tunnel Test	2
2	EXPERIMENTAL CONFIGURATION	5
	2.1 Wind Tunnel	5
	2.2 Model	5
3	INSTRUMENTATION AND DATA ACQUISITION	8
	3.1 Flow Visualization	8
	3.2 Pressures	8
	3.3 Velocity	10
4	RESULTS	12
	4.1 Flow Visualization	12
	4.2 Velocity	12
	4.3 Pressures	15
	4.4 Forces and Moments	19
5	DISCUSSION	21
	5.1 Flow Visualization	21
	5.2 Pedestrian Winds	21
	5.3 Pressures	23
	REFERENCES	24
	FIGURES	25
	TABLES	61
	APPENDIX A	116

LIST OF FIGURES

Figure		Page
1	Fluid Dynamics and Diffusion Laboratory	26
2	Wind-Tunnel Configuration	27
3	Pressure Tap Locations	28
4	Building Location and Pedestrian Wind Velocity Measuring Positions	36
5	Completed Model in Wind Tunnel	38
6	Data Sampling Time Verification	40
7	Mean Velocity and Turbulence Profiles approaching the Model	41
8	Mean Velocities and Turbulence Intensities at Pedestrian Locations	42
9	Wind Velocity Probabilities for Pedestrian Locations	51
10	Peak-Pressure Contours on the Building for Cladding Loads	55
11	Load, Shear, and Moment Diagrams for Selected Wind Directions	59

LIST OF TABLES

Table		Page
1	Motion Picture Scene Guide	62
2	Pedestrian Wind Velocities and Turbulence Intensities	63
3	Annual Percentage Frequencies of Wind Direction and Speed	68
4	Summary of Wind Effects on People	69
5	Calculation of Reference Pressure	70
6	Maximum Pressure Coefficients and Loads in PSF . . .	71
7	Loads, Shears, and Moments for each Wind Direction .	78

LIST OF SYMBOLS

Symbol	Definition
U	Local mean velocity
D	Characteristic dimension (building height, width, etc.)
ν, ρ	Kinematic viscosity and density of approach flow
$\frac{UD}{\nu}$	Reynolds number
E	Mean voltage
A, B, n	Constants
U_{rms}	Root-mean-square of fluctuating velocity
E_{rms}	Root-mean-square of fluctuating voltage
U_∞	Reference mean velocity outside the boundary layer
X, Y	Horizontal coordinates
Z	Height above surface
δ	Height of boundary layer
T_u	Turbulence intensity $\frac{U_{rms}}{U_\infty}$ or $\frac{U_{rms}}{U}$
$C_{p_{mean}}$	Mean pressure coefficient, $\frac{(p-p_\infty)_{mean}}{0.5\ \rho\ U_\infty^2}$
$C_{p_{rms}}$	Root-mean-square pressure coefficient, $\frac{\left((p-p_\infty)-(p-p_\infty)_{mean}\right)_{rms}}{0.5\ \rho\ U_\infty^2}$
$C_{p_{max}}$	Peak maximum pressure coefficient, $\frac{(p-p_\infty)_{max}}{0.5\ \rho\ U_\infty^2}$
$C_{p_{min}}$	Peak minimum pressure coefficient, $\frac{(p-p_\infty)_{min}}{0.5\ \rho\ U_\infty^2}$
$(\ )_{min}$	Minimum value during data record
$(\ )_{max}$	Maximum value during data record

Symbol	Definition
p	Fluctuating pressure at a pressure tap on the structure
p_∞	Static pressure in the wind tunnel above the model
F_x, F_y	Forces in X, Y direction
A_R	Reference Area
CF_X	Force coefficient, X direction, $\frac{F_x}{A_R \; 0.5\rho \; U_\infty^2}$
CF_Y	Force coefficient, Y direction, $\frac{F_y}{A_R \; 0.5\rho \; U_\infty^2}$

1. INTRODUCTION

1.1 General

A significant characteristic of modern building design is lighter cladding and more flexible frames. These features produce an increased vulnerability of glass and cladding to wind damage and result in larger deflections of the building frame. In addition, increased use of pedestrian plazas at the base of the buildings has brought about a need to consider the effects of wind and gustiness in the design of these areas.

The building geometry itself may increase or decrease wind loading on the structure. Wind forces may be modified by nearby structures which can produce beneficial shielding or adverse increases in loading. Overestimating loads results in uneconomical design; underestimating may result in cladding or window failures. Tall structures have historically produced unpleasant wind and turbulence conditions at their bases. The intensity and frequency of objectionable winds in pedestrian areas is influenced both by the structure shape and by the shape and position of adjacent structures.

Techniques have been developed for wind tunnel modeling of proposed structures which allow the prediction of wind pressures on cladding and windows, overall structural loading, and also wind velocities and gusts in pedestrian areas adjacent to the building. Information on sidewalk-level gustiness allows plaza areas to be protected by design changes before the structure is constructed. Accurate knowledge of the intensity and distribution of the pressures on the structure permits adequate but economical selection of cladding strength to meet selected maximum design winds and overall wind loads for the design of the frame for flexural control.

Modeling of the aerodynamic loading on a structure requires special consideration of flow conditions in order to guarantee similitude between model and prototype. A detailed discussion of the similarity requirements and their wind-tunnel implementation can be found in references (1), (2), and (3). In general, the requirements are that the model and prototype be geometrically similar, that the approach mean velocity at the building site have a vertical profile shape similar to the full-scale flow, that the turbulence characteristics of the flows be similar, and that the Reynolds number for the model and prototype be equal.

These criteria are satisfied by constructing a scale model of the structure and its surroundings and performing the wind tests in a wind tunnel specifically designed to model atmospheric boundary-layer flows. Reynolds number similarity requires that the quantity UD/ν be similar for model and prototype. Since ν, the kinematic viscosity of air, is identical for both, Reynolds numbers cannot be made precisely equal with reasonable wind velocities. To accomplish this the air velocity in the wind tunnel would have to be as large as the model scale factor times the prototype wind velocity, a velocity which would introduce unacceptable compressibility effects. However, for sufficiently high Reynolds numbers ($>2\times10^4$) the pressure coefficient at any location on the structure will be essentially constant for a large range of Reynolds numbers. Typical values encountered are 10^7-10^8 for the full-scale and 10^5-10^6 for the wind-tunnel model. In this range acceptable flow similarity is achieved without precise Reynolds number equality.

1.2 The Wind-Tunnel Test

The wind-engineering study is performed on a building or building group modeled at scales ranging from 1:150 to 1:400. The building model

is constructed of clear plastic fastened together with screws. The structure is modeled in detail to provide accurate flow patterns in the wind passing over the building surfaces. The building under test is often located in a surrounding where nearby buildings or terrain may provide beneficial shielding or adverse wind loading. To achieve similarity in wind effects the area surrounding the test building is also modeled. A flow visualization study is first made (smoke is used to make the air currents visible) to define overall flow patterns and identify regions where local flow features might cause difficulties in building curtain-wall design or produce pedestrian discomfort.

The test model, equipped with pressure taps (200 to 600 or more), is exposed to an appropriately modeled atmospheric wind in the wind tunnel and the fluctuating pressure at each tap measured electronically. The model, and the modeled area, are rotated 10 or 15 degrees and another set of data recorded for each pressure tap. Normally, 24 or 36 sets of data (360 degrees of turning) are taken; however, when flow visualization or recorded data indicate high pressure regions of small azimuthal extent, data is obtained in smaller azimuthal steps.

Data are recorded, analyzed and processed by an on-line computerized data-acquisition system. Pressure coefficients of several types are calculated by the computer for each reading on each piezometer tap and are printed in tabular form as computer readout. Using wind data applicable to the building site, representative wind velocities are selected for combination with measured pressures on the building model. Integration of test data with wind data results in prediction of peak local wind pressures for design of glass or cladding and may include overall forces and moments on the structure (by floor if desired) for design of

the structural frame. Pressure contours are drawn on the developed building surfaces showing the intensity and distribution of peak wind loads on the building. These results may be used to divide the building into zones where lighter or heavier cladding or glass may be desirable.

Based on the visualization (smoke) tests and on a knowledge of heavy pedestrian use areas, a dozen or more locations may be chosen at the base of the building where wind velocities can be measured to determine the relative comfort or discomfort of pedestrians in plaza areas, near building entrances, near building corners, or on sidewalks. Usually a reference pedestrian position is also tested to determine whether the wind environment in the building area is better or worse than the environment a block or so away in an undisturbed area.

The following pages discuss in greater detail the procedures followed and the equipment and data collecting and processing methods used. In addition, the data presentation format is explained and the implications of the data are discussed.

2. EXPERIMENTAL CONFIGURATION

2.1 Wind Tunnel

Wind-engineering studies are performed in the Fluid Dynamics and Diffusion Laboratory at Colorado State University (Figure 1). Three large wind tunnels are available for wind loading studies depending on the detailed requirements of the study. The wind tunnel used for this investigation is shown in Figure 2. All tunnels have a flexible roof adjustable in height to maintain a zero pressure gradient along the test section. The mean velocity can be adjusted continuously in each tunnel to the maximum velocity available.

2.2 Model

In order to obtain an accurate assessment of local pressures using piezometer taps, models are constructed to the largest scale that does not produce significant blockage in the wind-tunnel test section. The models are constructed of 1/2 in. thick Lucite plastic and fastened together with metal screws. Significant variations in the building surface, such as mullions, are machined into the plastic surface. Piezometer taps (1/16 in. diameter) are drilled normal to the exterior vertical surfaces in rows at several or more elevations between the bottom and top of the building. Similarly, taps are placed in the roof and on any sloping, protruding, or otherwise distinctive features of the building that might need investigation.

Pressure tap locations are chosen so that the entire surface of the building can be investigated for pressure loading and at the same time permit critical examination of areas where experience has shown that maximum wind effects may be expected to occur. Locations of the pressure taps for this study are shown in Figure 3. Dimensions are

given both for full-scale building (in ft) and for model (in in.). The pressure tap numbers are shown adjacent to the taps.

The pressure tests are sometimes made in two stages. In the first stage measurements are made on the initial distribution of pressure taps. If it becomes apparent from the data that the loading on the building is being influenced by some unsuspected geometry of the building or adjacent structures, additional pressure taps are installed in the critical areas. The locations of the taps are selected so that the maximum loading can be detected and the area over which this loading is acting can be defined. Any added taps are also shown in Figure 3.

A circular area 750 to 2000 ft in radius depending on model scale and characteristics of the surrounding buildings and terrain is modeled in detail. Structures within the modeled region are made from styrofoam and cut to the individual building geometries. They are mounted on the turntable in their proper locations. Significant terrain features are included as needed. The model is mounted on a turntable (Figure 2) near the downwind end of the test section. Any buildings or terrain features which do not fit on the turntable are placed on removable pieces which are placed upwind of the turntable for appropriate wind directions. A plan view of the building and its surroundings is shown in Figure 4. The turntable is calibrated to indicate azimuthal orientation to 0.1 degree.

The region upstream from the modeled area is covered with a randomized roughness constructed using various sized cubes placed on the floor of the wind tunnel. Different roughness sizes may be used for different wind directions. Spires are installed at the test-section entrance to provide a thicker boundary layer than would otherwise be

available. The thicker boundary layer permits a somewhat larger scale model than would otherwise be possible. The spires are approximately triangularly shaped pieces of 1/2 in. thick plywood 6 in. wide at the base and 1 in. wide at the top, extending from the floor to the top of the test section. They are placed so that the broad side intercepts the flow. A barrier approximately 8 in. high is placed on the test-section floor downstream of the spires to aid in development of the boundary-layer flow.

The distribution of the roughness cubes and the spires in the roughened area was designed to provide a boundary-layer thickness of approximately 4 ft, a velocity profile power-law exponent similar to that expected to occur in the region approaching the modeled area for each wind direction (a number of wind directions may have the same approach roughness). A photograph of the completed model in the wind tunnel is shown in Figure 5. The wind-tunnel ceiling is adjusted after placement of the model to obtain a zero pressure gradient along the test section.

3. INSTRUMENTATION AND DATA ACQUISITION

3.1 Flow Visualization

Making the air flow visible in the vicinity of the model is helpful (a) in understanding and interpreting mean and fluctuating pressures, (b) in defining zones of separated flow and reattachment and zones of vortex formation where pressure coefficients may be expected to be high and (c) in indicating areas where pedestrian discomfort may be a problem. Titanium tetrachloride smoke is released from sources on and near the model to make the flow lines visible to the eye and to make it possible to obtain motion picture records of the tests. Conclusions obtained from these smoke studies are discussed in Sections 4.1 and 5.1.

3.2 Pressures

Mean and fluctuating pressures are measured at each of the pressure taps on the model structure. Data are obtained for 24 or 36 wind directions, rotating the entire model assembly in a complete circle. Seventy-six pieces of 1/16 in. I.D. plastic tubing are used to connect 76 pressure ports at a time to an 80 tap pressure switch mounted inside the model. The switch was designed and fabricated in the Fluid Dynamics and Diffusion Laboratory to minimize the attenuation of pressure fluctuations across the switch. Each of the 76 measurement ports is directed in turn by the switch to one of four pressure transducers mounted close to the switch. The four pressure input taps not used for transmitting building surface pressures are connected to a common tube leading outside the wind tunnel. This arrangement provides both a means of performing in-place calibration of the transducers and, by connecting this tube to a pitot tube mounted inside the wind tunnel, a means of automatically monitoring the tunnel speed. The switch is operated by means of a shaft projecting through

the floor of the wind tunnel. A computer-controlled stepping motor steps the switch into each of the 20 required positions. The computer keeps track of switch position but a digital readout of position is provided at the wind tunnel.

The pressure transducers used are setra differential transducers (Model 237) with a 0.10 psid range. Reference pressures are obtained by connecting the reference sides of the four transducers, using plastic tubing, to the static side of a pitot-static tube mounted in the wind tunnel free stream above the model building. In this way the transducer measures the instantaneous difference between the local pressures on the surface of the building and the static pressure in the free stream above the model.

Output from the pressure transducers is fed to an on-line data acquisition system consisting of a Hewlett-Packard 21 MX computer, disk unit, card reader, printer, Digi-Data digital tape drive and a Preston Scientific analog-to-digital converter. The data are processed immediately into pressure coefficient form as described in Section 4.3 and stored for printout or further analysis.

All four transducers are recorded simultaneously for 16 seconds at a 250 sample per second rate. The results of an experiment to determine the length of record required to obtain stable mean and rms (root-mean-square) pressures and to determine the overall accuracy of the pressure data acquisition system is shown in Figure 6. A typical pressure port record was integrated for a number of different time periods to obtain the data shown. Examination of a large number of pressure taps showed that the overall accuracy for a 16 second period is, in pressure coefficient form, 0.03 for mean pressures, 0.1 for peak pressures, and 0.01 for rms pressures. Pressure coefficients are defined in Section 4.3.

3.3 Velocity

Mean velocity and turbulence intensity profiles are measured upstream of the model to determine that an approach boundary-layer flow appropriate to the site has been established. Tests are made at one wind velocity in the tunnel. This velocity is well above that required to produce Reynolds number similarity between the model and the prototype as discussed in Section 1.1.

In addition, mean velocity and turbulence intensity measurements are made 5 to 7 ft (prototype) above the surface at a dozen or more locations on and near the building for 16 wind directions. The measurement locations are shown on Figure 4. The surface measurements are indicative of the wind environment to which a pedestrian at the measurement location would be subjected. The locations are chosen to determine the degree of pedestrian comfort or discomfort at the building corners where relatively severe conditions frequently are found, near building entrances and on adjacent sidewalks where pedestrian traffic is heavy, and in open plaza areas. In most studies a reference pedestrian position, located about a block away, is also tested. These data are helpful in evaluating the degree of pedestrian comfort or discomfort in the proposed plaza area in terms of the undisturbed environment in the immediate vicinity.

Measurements are made with a single hot-wire anemometer mounted with its axis vertical. The instrumentation used is a Thermo Systems constant temperature anemometer (Model 1050) with a 0.001 in. diameter platinum film sensing element 0.020 in. long. Output is directed to the on-line data acquisition system for analysis.

Calibration of the hot-wire anemometer is performed by comparing output with the pitot-static tube in the wind tunnel. The calibration

data are fit to a variable exponent King's Law relationship of the form

$$E^2 = A + BU^n$$

where E is the hot-wire output voltage, U the velocity and A, B, and n are coefficients selected to fit the data. The above relationship was used to determine the mean velocity at measurement points using the measured mean voltage. The fluctuating velocity in the form U_{rms} (root-mean-square velocity) was obtained from

$$U_{rms} = \frac{2\ E\ E_{rms}}{B\ n\ U^{n-1}}$$

where E_{rms} is the root-mean-square voltage output from the anemometer. For interpretation all turbulence measurements for pedestrian winds were divided by the mean velocity outside the boundary-layer U_∞. Turbulence intensity in velocity profile measurements used the local mean velocity.

4. RESULTS

4.1 Flow Visualization

A film is included as part of this report showing the characteristics of flow about the structure using smoke to make the flow visible. A listing of the contents of the film is shown in Table 1. Several features can be noted from the visualization. As with all large structures, wind approaching the building is deflected down to the plaza level, up over the structure and around the sides. A description of the smoke test results emphasizing flow patterns of concern relative to possible high-wind load areas and pedestrian comfort is given in Section 5.1.

4.2 Velocity

Velocity and turbulence profiles are shown in Figure 7. Profiles were taken upstream from the model which are characteristic of the boundary layer approaching the model and sometimes at the building site with building removed. The boundary-layer thickness, δ, is shown in Figure 7. The corresponding prototype value of δ for this study is also shown in the figure. This value was established as a reasonable height for this study. The mean velocity profile approaching the modeled area has the form

$$\frac{U}{U_\infty} = \left(\frac{z}{\delta}\right)^n .$$

The exponent n for the approach flow established for this study is shown in Figure 7.

Profiles of longitudinal turbulence intensity in the flow approaching the modeled area are shown in Figure 7. The turbulence intensities are appropriate for the approach mean velocity profile selected. For the velocity profiles, turbulence intensity is defined

as the root-mean-square about the mean of the longitudinal velocity fluctuations divided by the local mean velocity U,

$$Tu = \frac{U_{rms}}{U} .$$

Velocity data obtained at each of the pedestrian measurement locations shown in Figure 4 are listed in Table 2 as mean velocity U/U_∞, turbulence intensity U_{rms}/U_∞, and largest effective gust

$$U_{pk} = \frac{U + 3U_{rms}}{U_\infty} .$$

These data are plotted in polar form in Figure 8. Measurements were taken 5 to 7 ft above the ground surface. A site map is superimposed on the polar plots to aid in visualization of the effects of the nearby structures on the velocity and turbulence magnitudes. An analysis of these wind data is given in Section 5.2.

To enable a quantitative assessment of the wind environment, the wind-tunnel data were combined with wind frequency and direction information obtained at the local airport. Table 3 shows wind frequency by direction and magnitude obtained from summaries published by the National Weather Service. These data, usually obtained at an elevation of about 30-40 ft, were converted to velocities at the reference velocity height for the wind-tunnel measurements and combined with the wind-tunnel data to obtain cumulative probability distributions (percent time a given velocity is exceeded) for wind velocity at each measuring location. The percentage times were summed by wind direction to obtain a percent time exceeded at each measuring position independent of wind direction (but accounting for the fact that the wind blows from different directions with varying frequency). These results are plotted in Figure 9.

Interpretation of Figure 9 is aided by a description of the effects of wind of various magnitudes on people. The earliest quantitative description of wind effects was established by Sir Francis Beaufort in 1806 for use at sea and is still in use today. Several recent investigators have added to the knowledge of wind effects on pedestrians. These investigations along with suggested criteria for acceptance have been summarized by Penwarden and Wise (4) and Melbourne (5). The Beaufort scale (from ref. 4), based on mean velocity only, is reproduced as Table 4 including qualitative descriptions of wind effects. Table 4 suggests that mean wind speeds below 12 mph are of minor concern and that mean speeds above 24 mph are definitely inconvenient. Quantitative criteria for acceptance from reference 5 are superimposed as dashed lines on Figure 9. The peak gust curves shown in Figure 9 are the percent of time during which a short gust of the stated magnitude could occur (say about one of these gusts per hour). Implications of the data plotted in Figure 9 are presented in Section 5.2

Because some pedestrian wind measuring positions are purposely chosen at sites where the smoke tests showed large velocities of small spacial extent, the general wind environment about the structure may be less severe than one might infer from a strict analysis of Table 2 and Figure 9.

4.3 Pressures

For each of the pressure taps examined at each wind direction, the data record is analyzed to obtain four separate pressure coefficients. The first is the mean pressure coefficient

$$C_{p_{mean}} = \frac{(p-p_\infty)_{mean}}{0.5\ \rho\ U_\infty^{\ 2}}$$

where the symbols are as defined in the List of Symbols. It represents the mean of the instantaneous pressure difference between the building pressure tap and the static pressure in the wind tunnel above the building model, nondimensionalized by the dynamic pressure

$$0.5\ \rho\ U_\infty^{\ 2}$$

at the reference velocity position. This relationship produces a dimensionless coefficient which indicates that the mean pressure difference between building and ambient wind at a given point on the structure is some fraction less or some fraction greater than the undisturbed wind dynamic pressure near the upper edge of the boundary layer. Using the measured coefficient, prototype mean pressure values for any wind velocity may be calculated.

The magnitude of the fluctuating pressure is obtained by the rms pressure coefficient

$$C_{p_{rms}} = \frac{\left((p-p_\infty) - (p-p_\infty)_{mean}\right)_{rms}}{0.5\ \rho\ U_\infty^{\ 2}}$$

in which the numerator is the root-mean-square of the instantaneous pressure difference about the mean .

If the pressure fluctuations followed a Gaussian probability distribution, no additional data would be required to predict the

frequency with which any given pressure level would be observed. However, the pressure fluctuations do not, in general, follow a Gaussian probability distribution so that additional information is required to show the extreme values of pressure expected. The peak maximum and peak minimum pressure coefficients are used to determine these values:

$$C_{p_{max}} = \frac{(p-p_\infty)_{max}}{0.5\ \rho\ U_\infty^2}$$

$$C_{p_{min}} = \frac{(p-p_\infty)_{min}}{0.5\ \rho\ U_\infty^2}$$

The values of $p-p_\infty$ which were digitized at 250 samples per second for 16 seconds, representing about one hour of time in the full-scale, are examined individually by the computer to obtain the most positive and most negative values during the 16-second period. These are converted to $C_{p_{max}}$ and $C_{p_{min}}$ by nondimensionalizing with the free stream dynamic pressure.

The four pressure coefficients are calculated by the on-line data acquisition system computer and tabulated along with the approach wind azimuth in degrees from true north. The list of coefficients is included as Appendix A. The pressure tap code numbers used in the appendix are explained in Figure 3.

To determine the largest peak loads acting at any point on the structure for cladding design purposes, the pressure coefficients for all wind directions were searched to obtain, at each pressure tap, the largest absolute value of peak pressure coefficient. Table 6 provides these pressure coefficients and associated wind directions. Included in Section 5.3 is an analysis of the coefficients of Table 6 including the maximum values obtained and where they occurred on the building.

The pressure coefficients of Table 6 can be converted to full-scale loads by multiplication by a suitable reference pressure selected for the field site. This reference pressure is represented in the equations for pressure coefficients by the $0.5\ \rho\ U_\infty^2$ denominator. This value is the dynamic pressure associated with an hourly mean wind at the reference velocity measurement position at the edge of the boundary layer. In general, the method of arriving at a design reference pressure for a particular site involves selection of a design wind velocity, translation of the velocity to an hourly mean wind at the reference velocity location and conversion to a reference pressure. Selection of the design velocity can be made from statistical analysis of extreme wind data or selected from wind maps contained in the proposed wind loading code ANSI A58.1 of the American National Standards Institute (6). The calculation of reference pressure for this study is shown in Table 5. The factor used in Table 5 to reduce gust winds to hourly mean winds is given in reference (7).

The reference pressure associated with the design hourly mean velocity at the reference velocity location can be used directly with the peak-pressure coefficients to obtain peak local design wind loads for cladding design. Local, instantaneous peak loads on the full-scale building suitable for cladding design were computed by multiplying the reference pressure of Table 5 by the peak coefficients of Table 6 and are listed as peak pressures in that table. The maximum psf load given at each tap location is the absolute value of the maximum value found in the tests, irrespective of its algebraic sign. For ease in visualizing the loads on the structure, contours of equal peak pressures for cladding load shown in Table 6 have been plotted on developed elevation

views of the structure, Figure 10. For control of water infiltration from outside to inside, the largest positive (inward-acting) pressure at each tap location is tabulated in Table 6.

For glass design pressures, a glass load factor is used to account for the different duration between measured peak pressures and the one minute loading commonly used in glass design charts. The design pressure used for glass is normally less than the peak pressures used for cladding design because of the static fatigue property of glass which can withstand higher pressures for short duration loads than for long duration loads. Recent research (8) indicates that the period of application of the peak pressures reported herein is about 5-10 seconds or less. If a glass design is based on these peak-pressure values, then a glass strength associated with this duration load should be used. Because glass design charts are normally based on some alternate load duration--usually one minute--then some reduction in peak loads should be made. An estimate of a load reduction factor can be obtained from an empirical relation of glass strength as a function of load duration. Current glass selection charts showing glass strength as a function of load duration (9) and older references (10) indicate the following load reduction factors:

	ref 9	ref 10
annealed float	0.80	0.81
heat strengthened	0.94	
tempered	0.97	0.98

Loadings appropriate for glass design can be computed by multiplying the peak-pressure loads of Table 6 by these load factors.

4.4 Forces and Moments

Force coefficients in the horizontal X and Y directions and moment coefficients about the X, Y, and Z axes with the origin at ground level at the base of the building with Z axis vertical may be computed for all wind directions tested by integration of mean pressures on the building. Overall forces and moments acting on the full-scale building due to wind loading which are useful in designing the structural framing of the proposed building may be obtained from use of these coefficients.

Force coefficients were computed for each floor for each wind direction using the equations shown below.

$$CF_X = \frac{F_X}{A_R \; 0.5 \; \rho \; U_\infty^{\;2}} \qquad CF_Y = \frac{F_Y}{A_R \; 0.5 \; \rho \; U_\infty^{\;2}}$$

Terms and symbols used in the equations are defined in the List of Symbols and the axes are defined for the building in Figure 3. Force coefficients CF_X and CF_Y were computed for the horizontal forces acting along the X and Y axes using the mean pressure coefficient at each pressure tap. A_R represents a constant reference area for nondimensionalization of the forces and moments.

The total forces acting on the full-scale building for each floor and wind direction were computed by multiplying the above coefficients by the appropriate full-scale reference area, by the reference pressure of Table 5, and by a gust load factor selected for an appropriate wind gust duration. The gust load factor, shown in Table 5, was selected to increase the loads from an hourly mean load to that of a gust whose duration would be sufficient for its effect to be fully felt by the structure. A table of gust load factors for various gust durations is

incorporated in Table 5 so that force and moment data of Table 7 may be adjusted to a different load duration if desired.

The forces obtained at each floor were used to obtain load, shear, and moment diagrams for the building for each wind direction. The shear diagram, in kips, was obtained by algebraic sum of all forces in each coordinate direction acting above the floor of interest. The load diagram, in psf, was obtained by dividing the shear values by their contributing areas (listed in Table 7). The moment diagram, in 1000 ft-kips, was obtained by integration of the shear values so that the moment due to forces acting above the floor level of interest was calculated. The sign of the moment was established by the right-hand rule about an X', Y' axis through the floor of interest. Moments about the Z axis were calculated by considering the displacement of forces in the X and Y directions from the Z axis shown in Figure 3. Load, shear, and moment diagrams are shown in Figure 11 for several wind directions.

5. DISCUSSION

5.1 Flow Visualization

Flow patterns identified with smoke showed that vortex flows developed for some wind directions at all corners of the sloping roof--sometimes over the roof surface, sometimes on the adjacent sidewall near the corner and sometimes both places. These vortices typically generate very high negative (outward acting) pressures on the building surface underneath the vortex flow. Additional vortices were observed on the eastern edge of the north and south faces at the elevation of the garage structure to the east. These vortices were directly associated with the presence of the garage structure.

Wind velocities in pedestrian areas at the base of the building appeared to be fairly strong at some locations for a narrow range of approach wind velocities. The strongest of these winds appeared to be in the undercut at the east end of the building for northerly and southerly winds.

5.2 Pedestrian Winds

Figure 4 shows the 18 pedestrian locations selected for investigation of pedestrian wind comfort. Location 1 was selected as a reference location which should be reasonably undisturbed by presence of the 1221 Brickell building. Locations 4, 14 and 16 were located in the plaza area under the building undercut. Table 2 and Figure 8 show that the largest values of mean velocity were measured at locations 4, 14 and 16 under the building overhang with values ranging from 69-79 percent of U_∞, the mean velocity at the boundary layer height. These velocities were measured for three approach wind directions for locations 4 and 16 and two wind directions for location 14. In comparison, the largest mean velocity at

reference location 1 was 61 percent of U_∞, while in an open-country environment a value of about 45 percent might be expected.

The largest values of fluctuating velocity, U_{rms}, were measured at locations 8, 10, 16 and reference location 1 with values ranging from 18-26 percent of U_∞. These compare to a value of about 10-12 percent one might expect in an open-country environment. The largest values of peak gust, represented by the mean plus three rms as discussed in section 4.2, were obtained at location 16 with 4 wind directions having values ranging from 119-138 percent of U_∞. For comparison, the largest peak gust measured at reference location 1 was 114 percent of U_∞; the value expected in an open-country environment might be 75-85 percent.

Velocity data of Table 2 integrated with local wind data are shown in Figure 9. Based on the data in this figure, the windiest locations will be 1, 4, 11, 14 and 16 which will be uncomfortable a significant portion of the time for long-exposure activities but comfortable essentially all the time for short-exposure activities and for walking. The high wind speeds observed during smoke flow tests at locations 4, 14 and 16 occur for wind directions which are sufficiently infrequent that they do not greatly affect the overall comfort rating at those locations.

The results of the pedestrian wind analysis showed that no significant wind problems should occur except infrequent occurrences of high winds under the building undercut when high winds approach the building from the critical wind directions. The wind environment about the base of 1221 Brickell is milder in general than most buildings which have been tested in the Fluid Dynamics and Diffusion Laboratory--in large part due to the favorable orientation of the project to prevailing winds.

5.3 Pressures

Table 6 shows the largest pressure coefficients and corresponding loads measured on the building for each pressure tap location. Data identified as configuration A in Table 6 and Appendix A represent data obtained at all tap locations for 36 wind directions. Configuration B represents data obtained at 28 selected taps at 2° azimuthal increments near azimuths where large pressure peaks were observed in configuration A to ensure that the largest peaks were obtained. The largest peak pressure coefficients measured on the building were -3.76 and -3.67 obtained at taps 225 and 230 on the west face of the building just above the lower sloped roof. Flow visualization confirmed that these large coefficient values were due to vortices which formed at the change in the vertical line of the building corner. Other large pressure coefficients were observed in the regions near taps 337, 407, 171, 371 and 138, all of which showed vortex flow patterns in the flow visualization experiments.

The largest peak pressure coefficients represent, using the 50-year recurrence wind reference pressure of Table 5, peak cladding pressures up to 180 psf. These values are quite high and are due to the combination of high basic wind speed (110 mph fastest mile) and the presence of vortices on the structure. Figure 10 shows that most peak pressures are in the 60-90 psf range.

Figure 11 shows load, shear and moment diagrams for the largest loads in the X and Y directions.

REFERENCES

1. Cermak, J. E., "Laboratory Simulation of the Atmospheric Boundary Layer," AIAA Jl., Vol. 9, September 1971.

2. Cermak, J. E., "Applications of Fluid Mechanics to Wind Engineering," A Freeman Scholar Lecture, ASME Jl. of Fluids Engineering, Vol. 97, No. 1, March 1975.

3. Cermak, J. E., "Aerodynamics of Buildings," Annual Review of Fluid Mechanics, Vol. 8, 1976, pp. 75-106.

4. Penwarden, A. D., and Wise, A. F. E., "Wind Environment Around Buildings," Building Research Establishment Report, HMSO, 1975.

5. Melbourne, W. H., "Criteria for Environmental Wind Conditions," Jl. Industrial Aerodynamics, vol. 3, pp. 241-247, 1978.

6. American National Standards Institute, "American National Standard Building Code Requirements for Minimum Design Loads in Buildings and Other Structures," ANSI Standard A58.1, 1972.

7. Hollister, S. C., "The Engineering Interpretation of Weather Bureau Records for Wind Loading on Structures," Building Science Series 30--Wind Loads on Buildings and Structures, National Bureau of Standards, pp. 151-164, 1970.

8. Peterka, J. A., and Cermak, J. E., "Peak-Pressure Duration in Separated Regions on a Structure," U.S.-Japan Research Seminar on Wind Effects on Structures, Kyoto, Japan, 9-13 September 1974; Report CEP74-75JAP-JEC8, Fluid Mechanics Program, Colroado State University, September 1974.

9. PPG Glass Thickness Recommendations to Meet Architects' Specified 1-Minute Wind Load, Pittsburgh Plate Glass Industries, April 1979.

10. Shand, E. B., "Glass Engineering Handbook," Second Edition, McGraw-Hill, New York, p. 51, 1958.

FIGURES

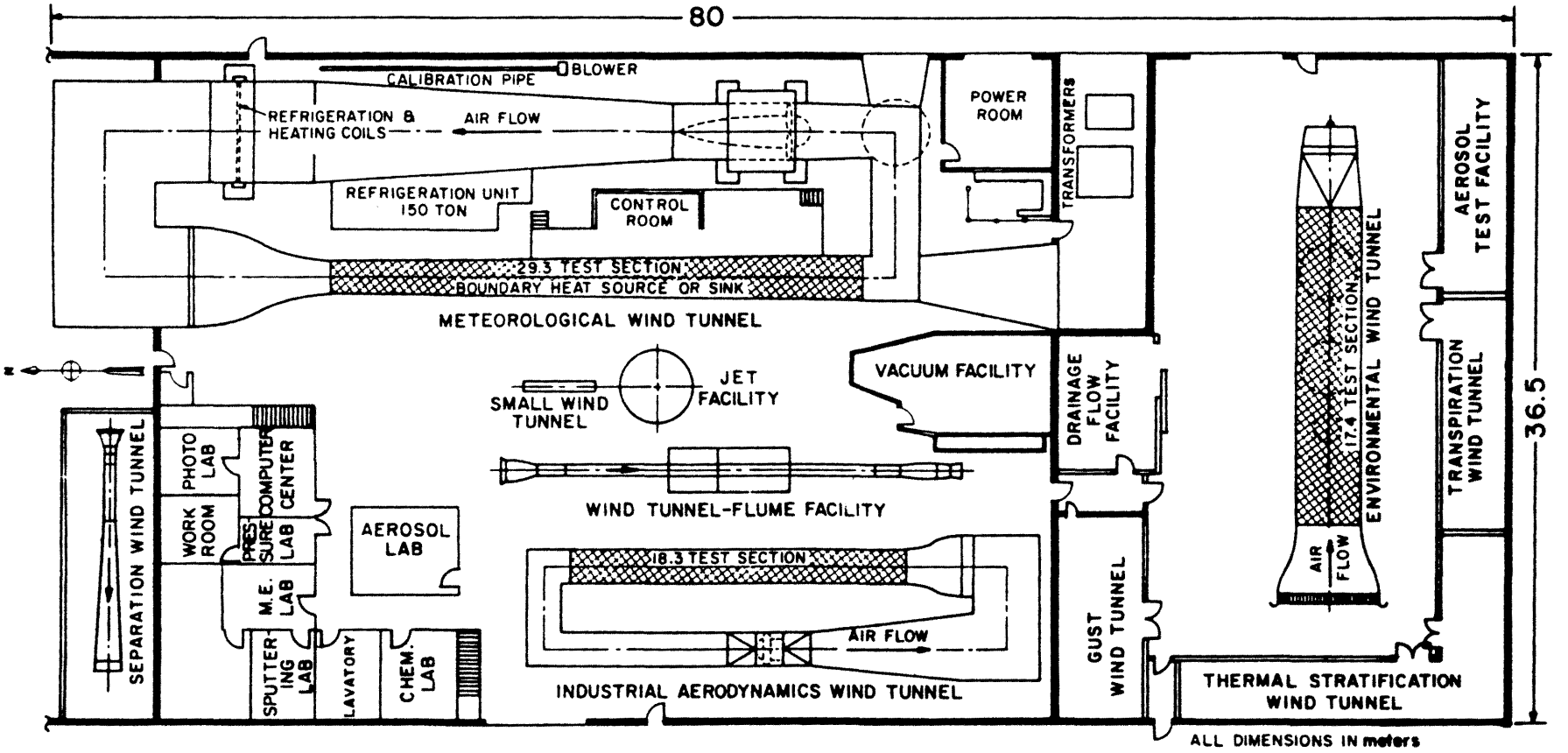

Fig. 1. **FLUID DYNAMICS AND DIFFUSION LABORATORY COLORADO STATE UNIVERSITY**

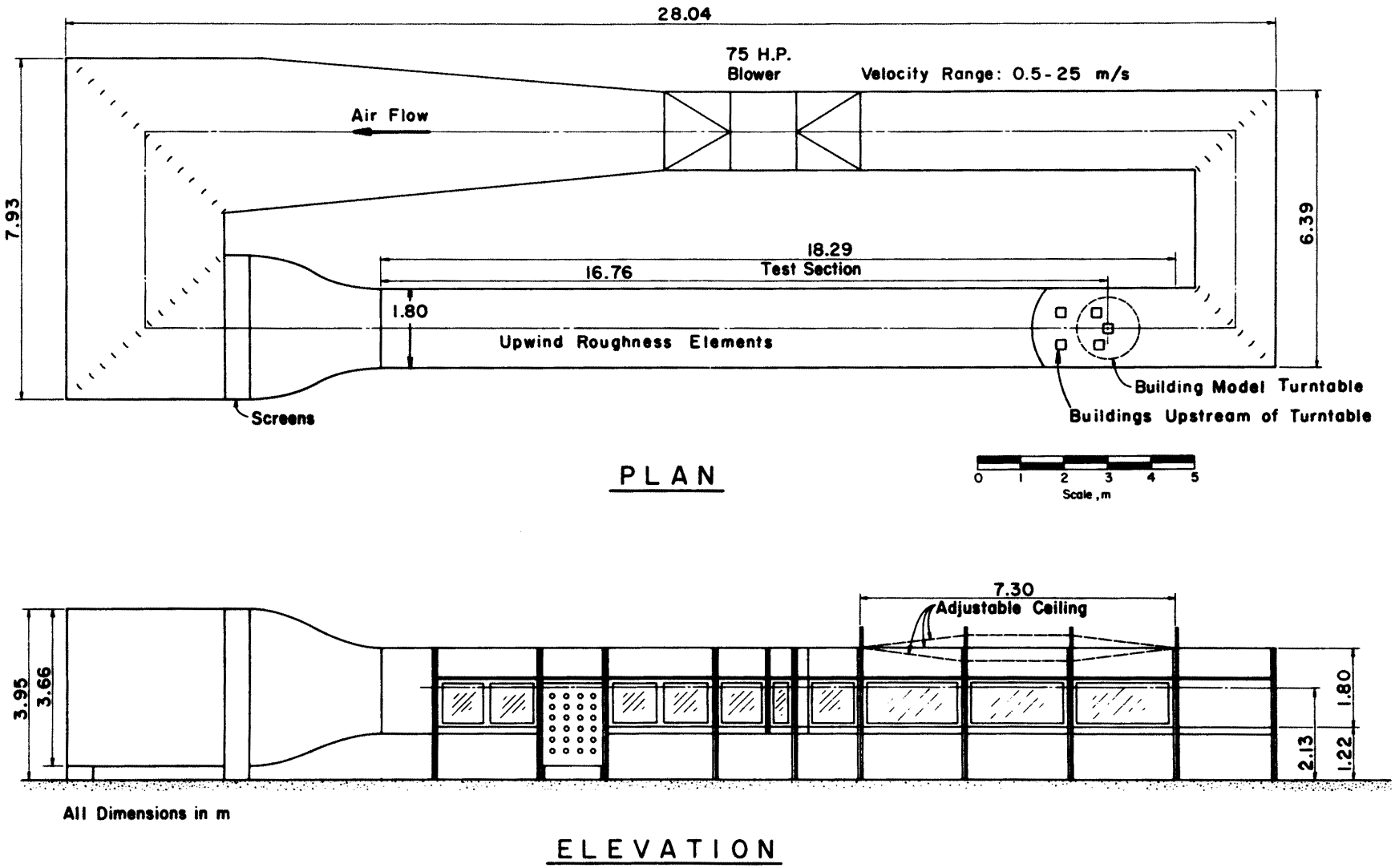

INDUSTRIAL AERODYNAMICS WIND TUNNEL

Figure 2 - Wind Tunnel Configuration

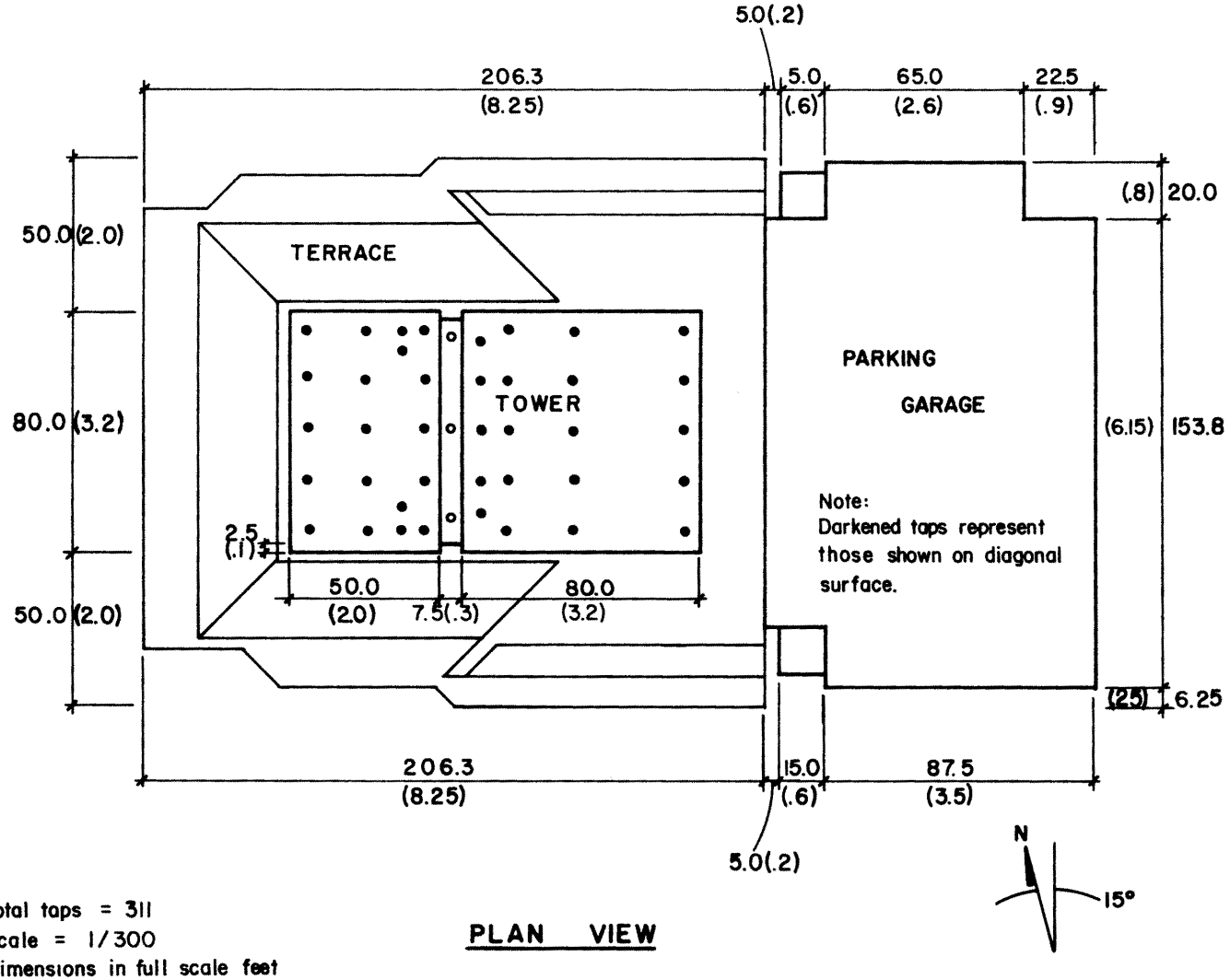

Total taps = 311
Scale = 1/300
Dimensions in full scale feet
and model inches.

PLAN VIEW

Figure 3a. Pressure Tap Locations

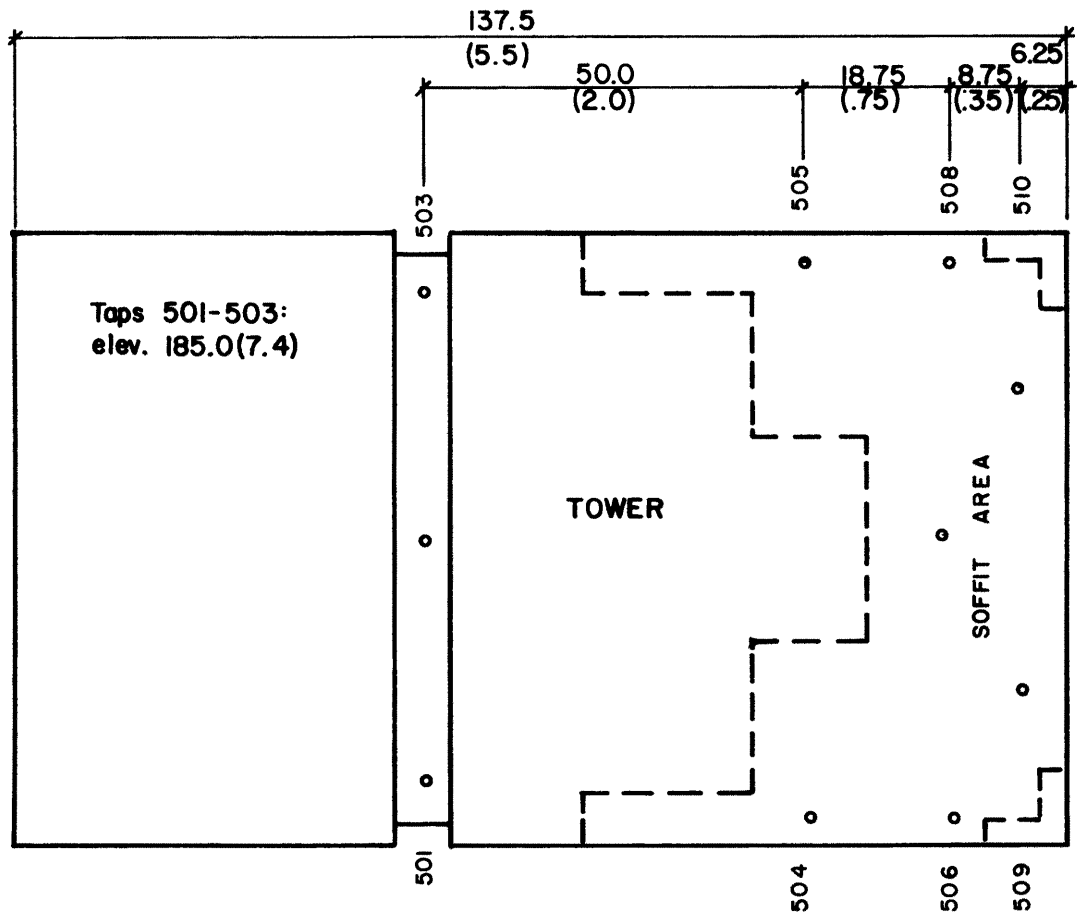

PLAZA LEVEL PLAN

Note:
Vertical tap dimensions not shown here can be found on the East elevation.

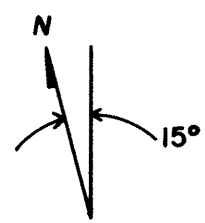

Figure 3b. Pressure Tap Locations

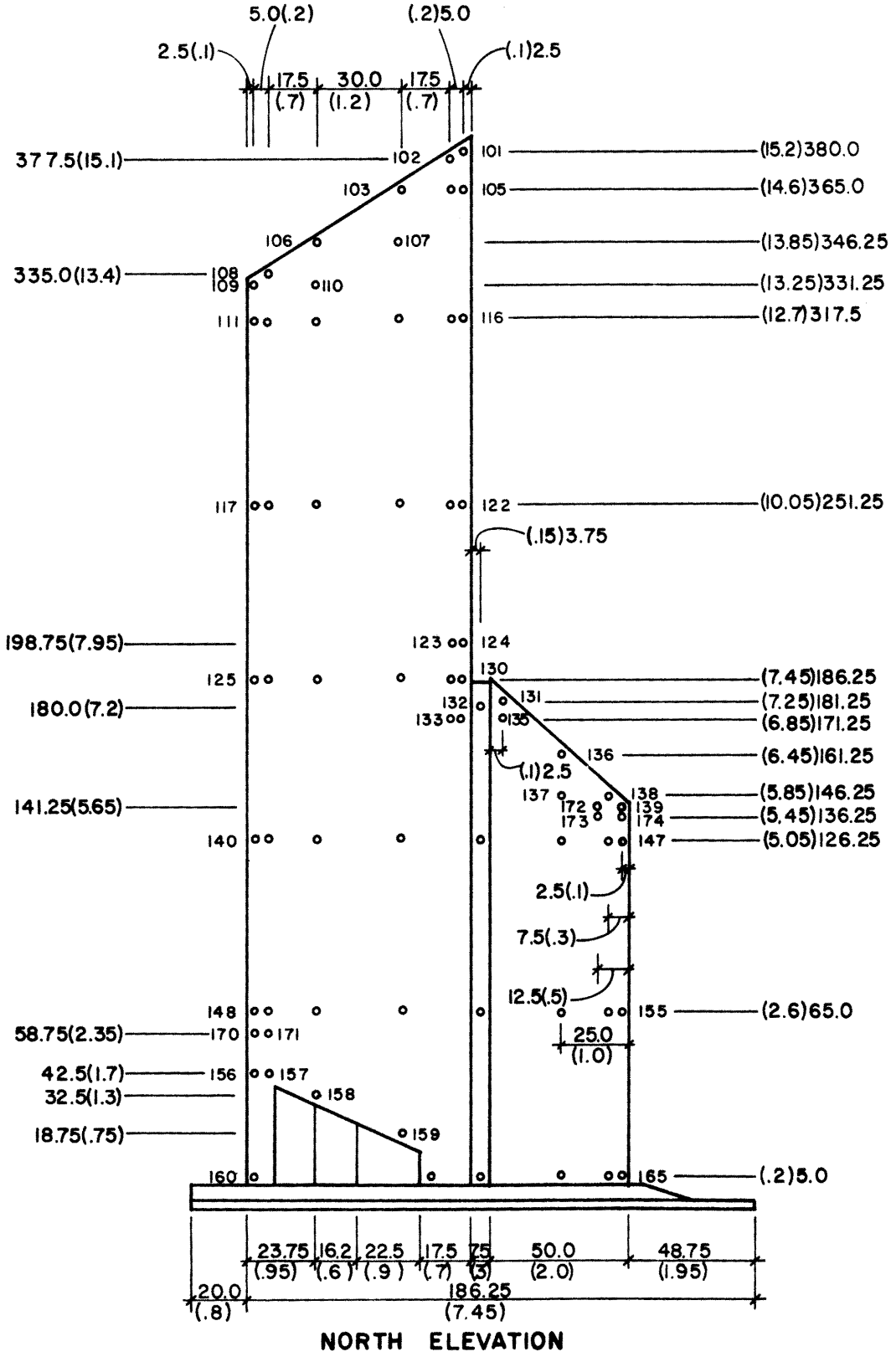

Figure 3c. Pressure Tap Locations

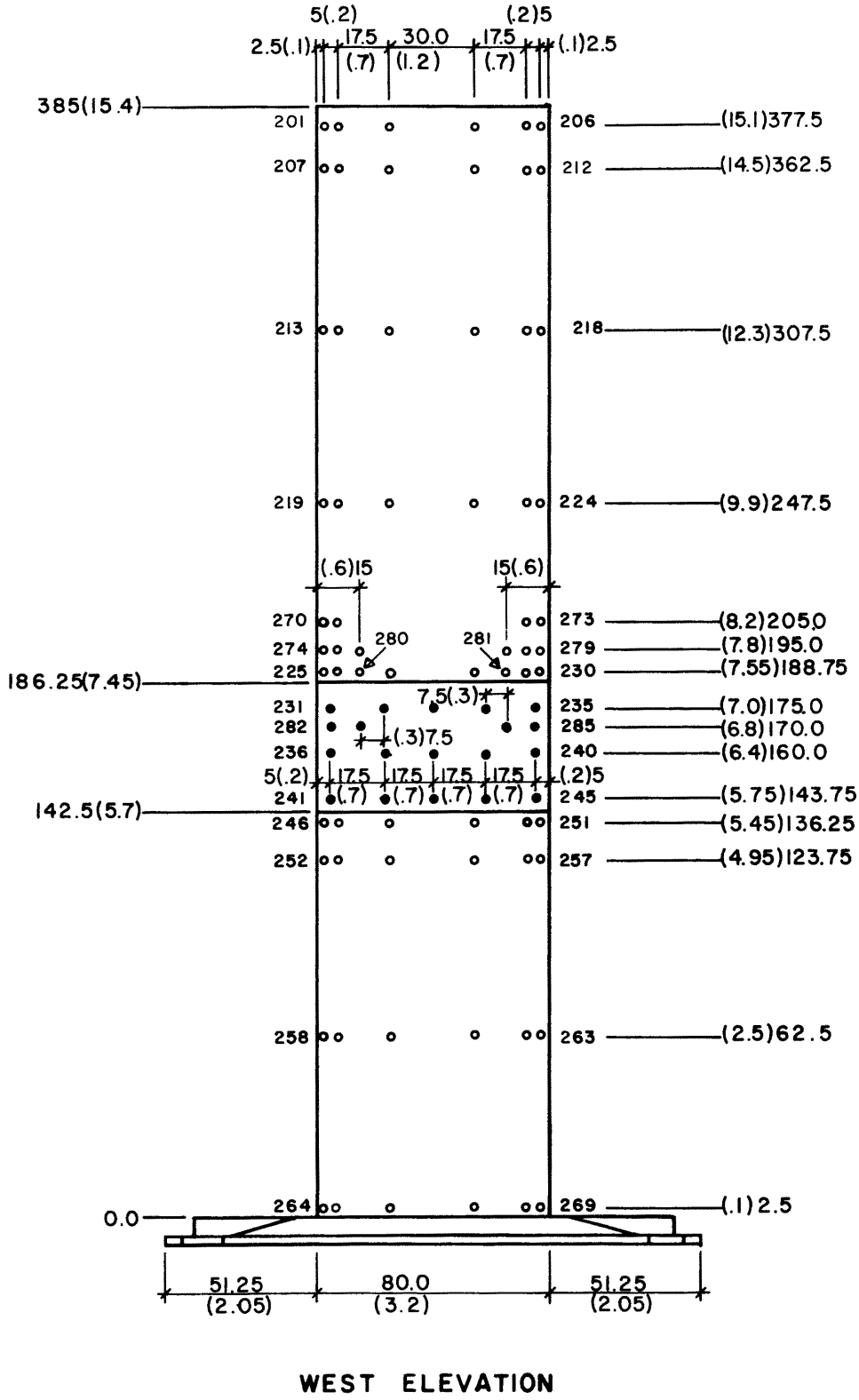

WEST ELEVATION

Figure 3d. Pressure Tap Locations

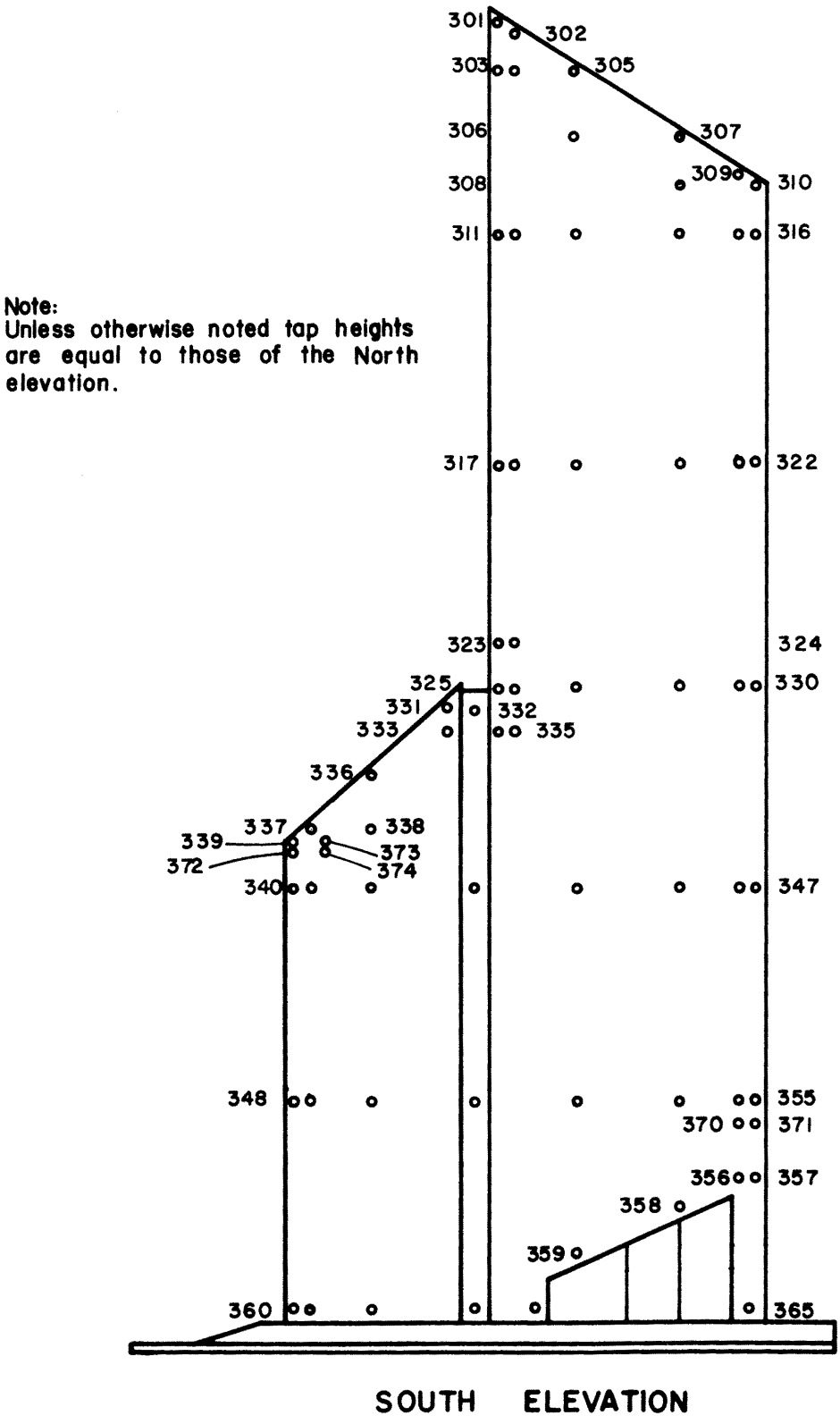

Figure 3e. Pressure Tap Locations

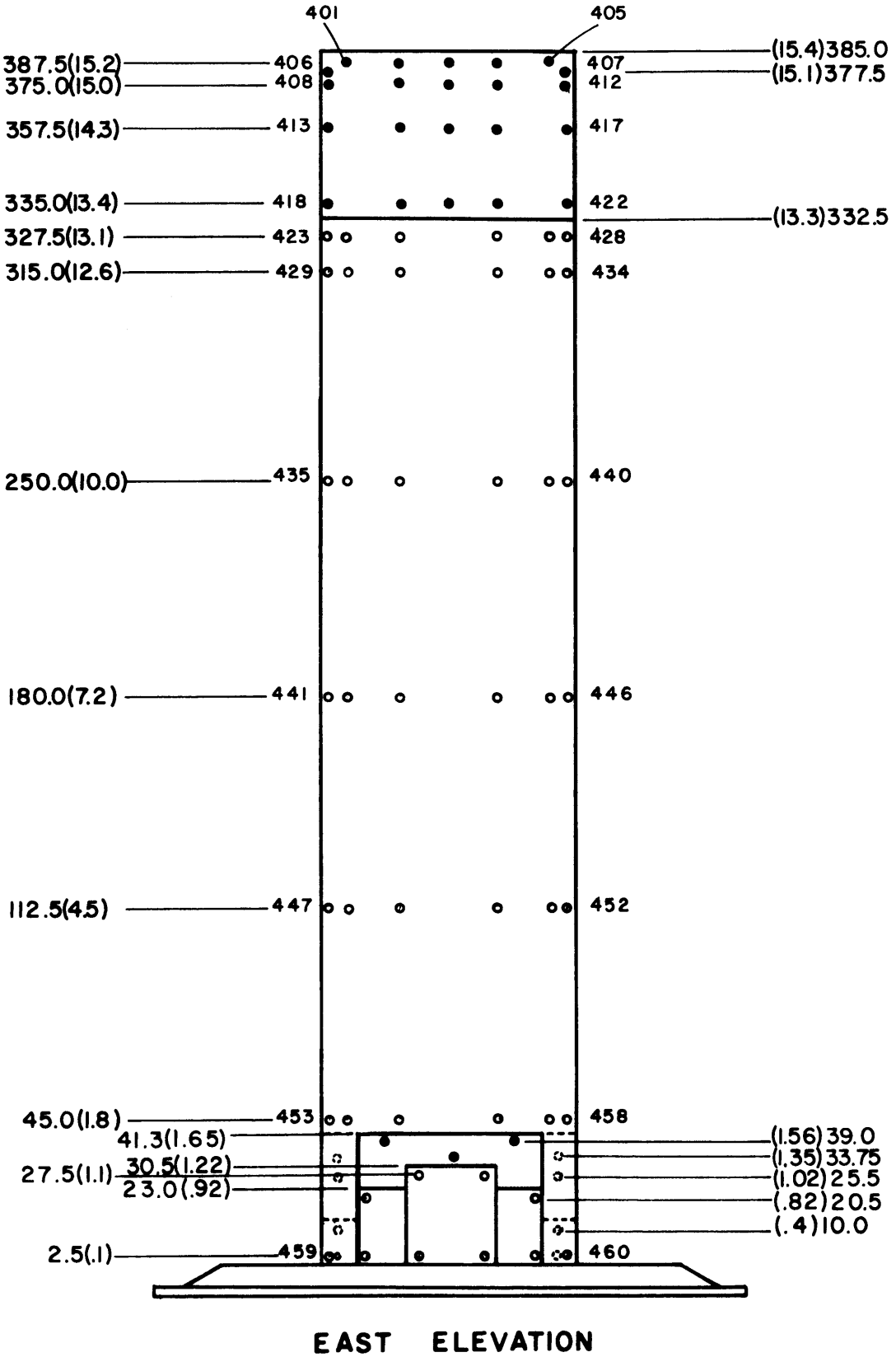

Figure 3f. Pressure Tap Locations

Note:
Tap and structural dimensions not noted on this drawing are located on their respective elevation drawings.

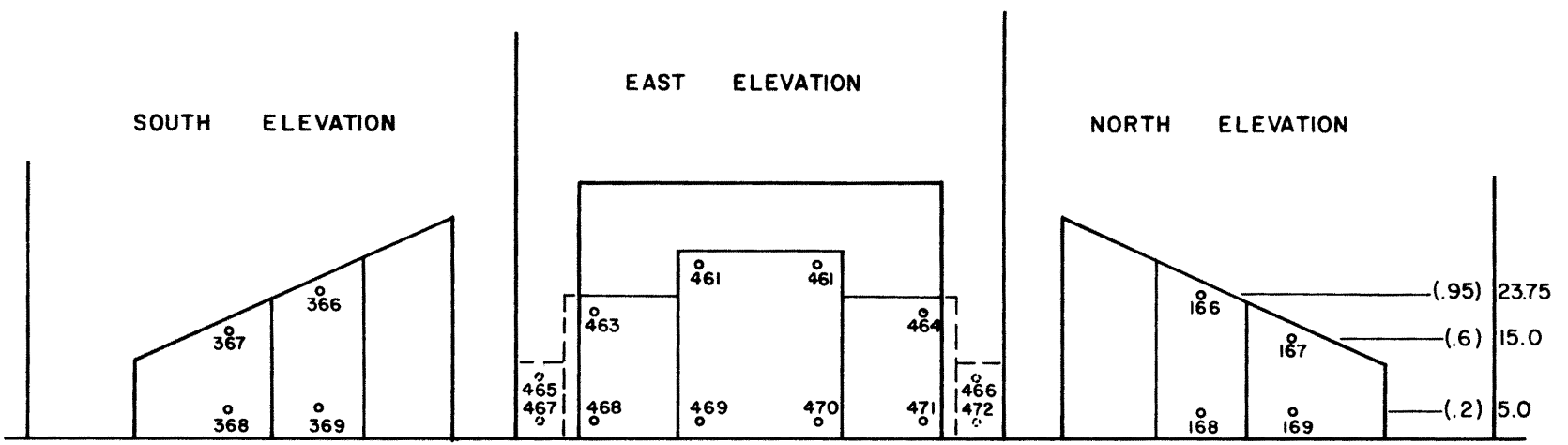

UNDERCUT WALLS - DEVELOPMENT

Figure 3g. Pressure Tap Locations

COORDINATE SYSTEM for FORCES and MOMENTS

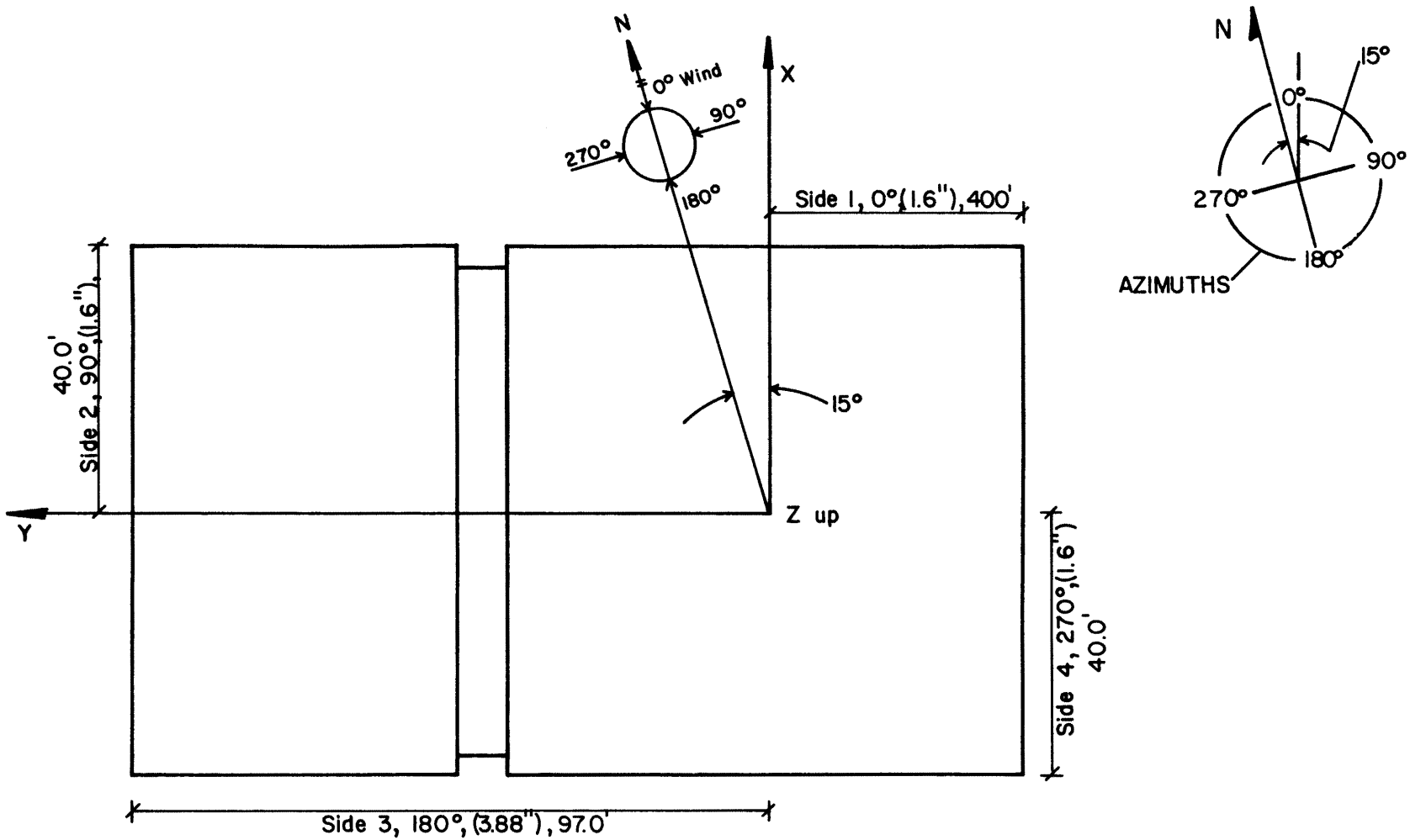

Figure 3h. Force and Moment Coordinate System

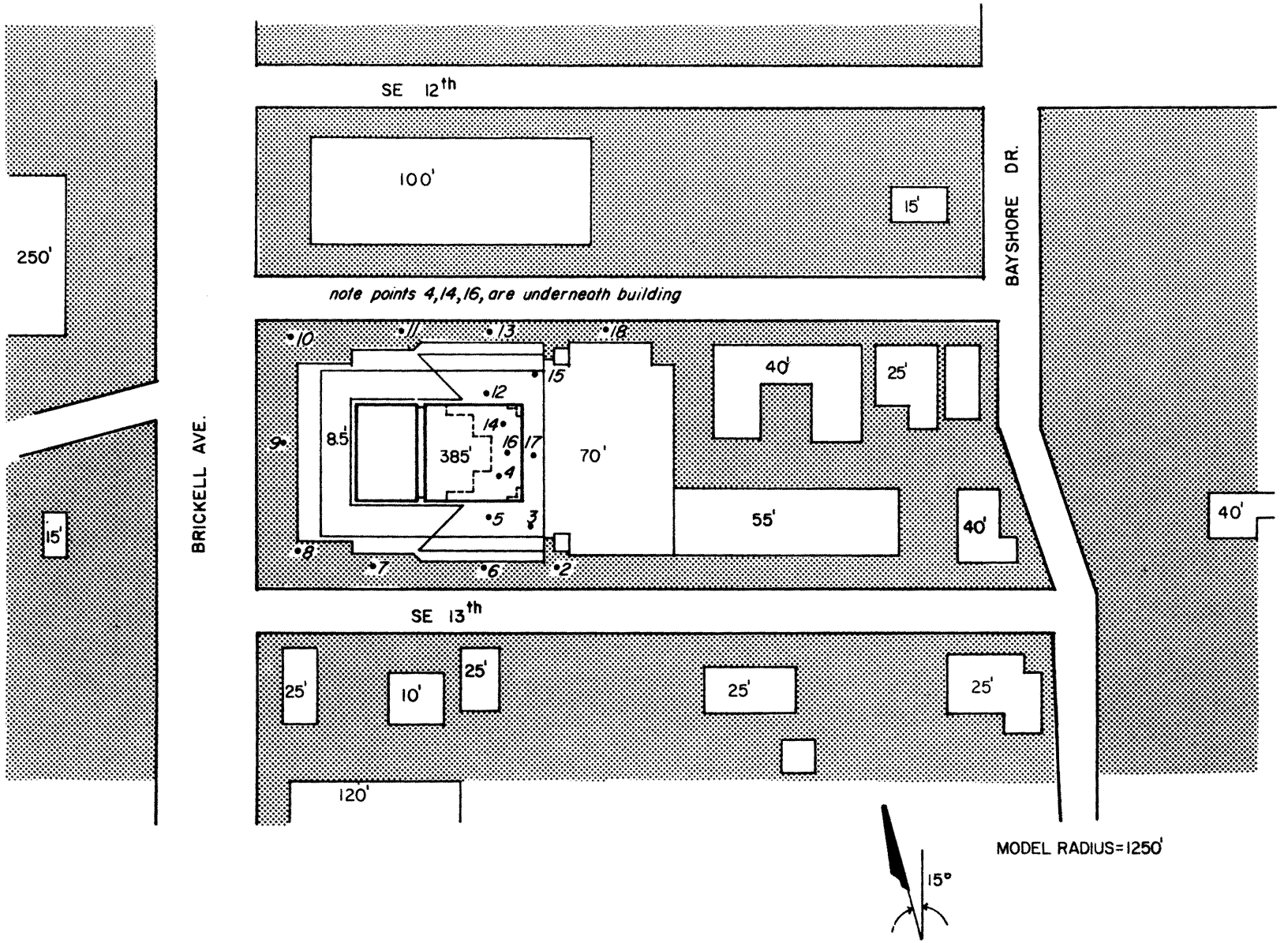

Figure 4a. Building Location and Pedestrian Wind Velocity Measuring Positions

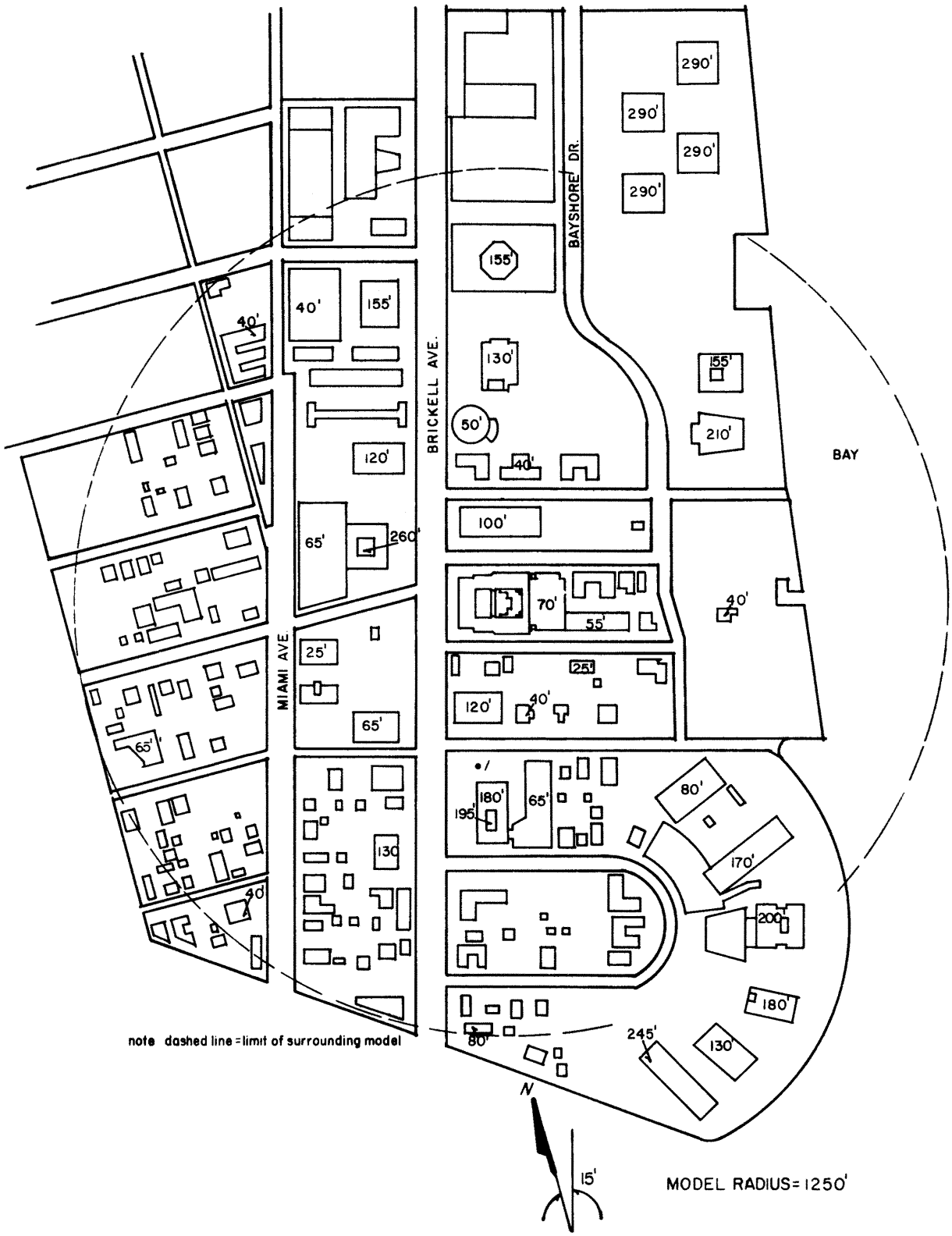

Figure 4b. Building Location and Pedestrian Wind Velocity Measuring Positions

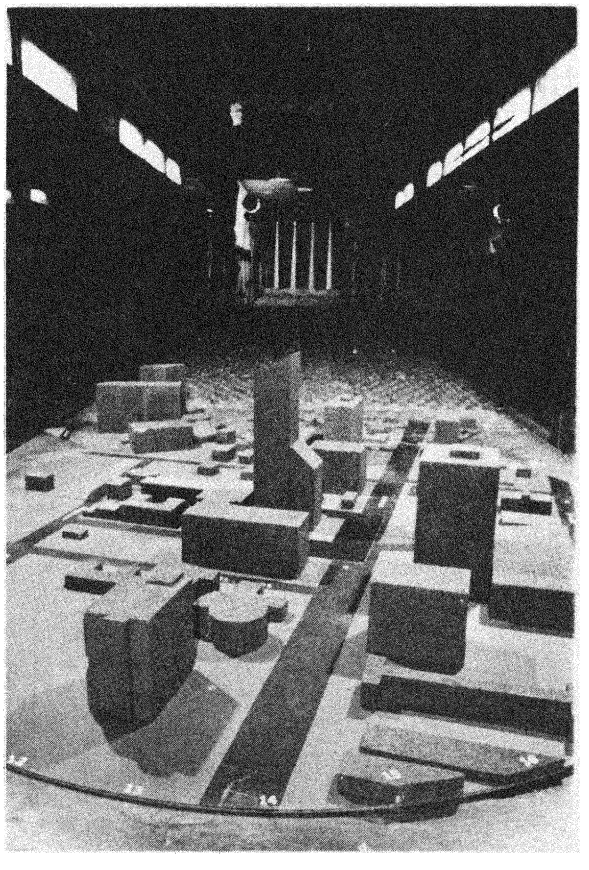

Figure 5. Completed Model in Wind Tunnel

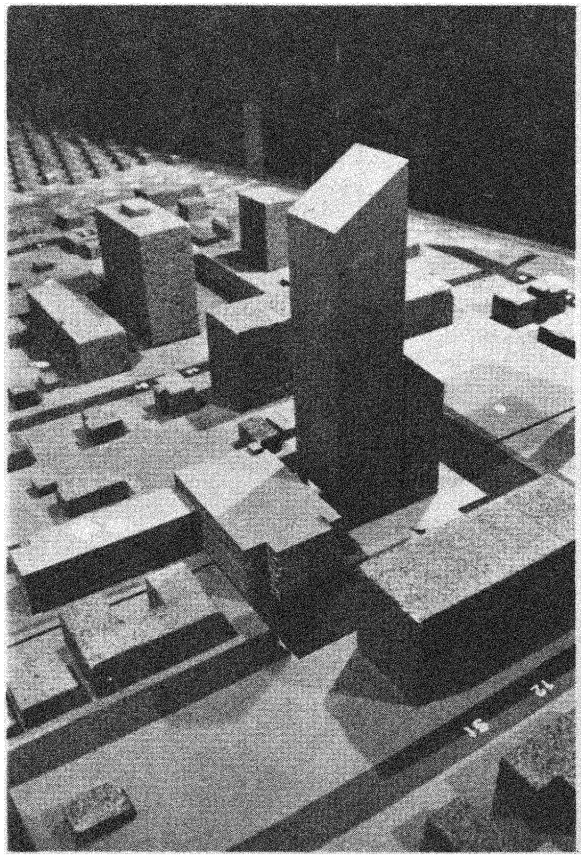

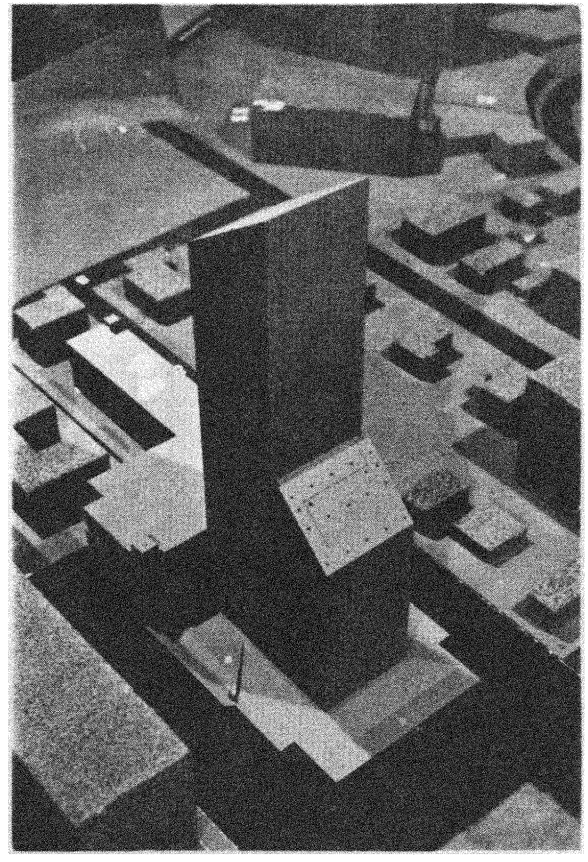

Figure 5. Completed Model in Wind Tunnel

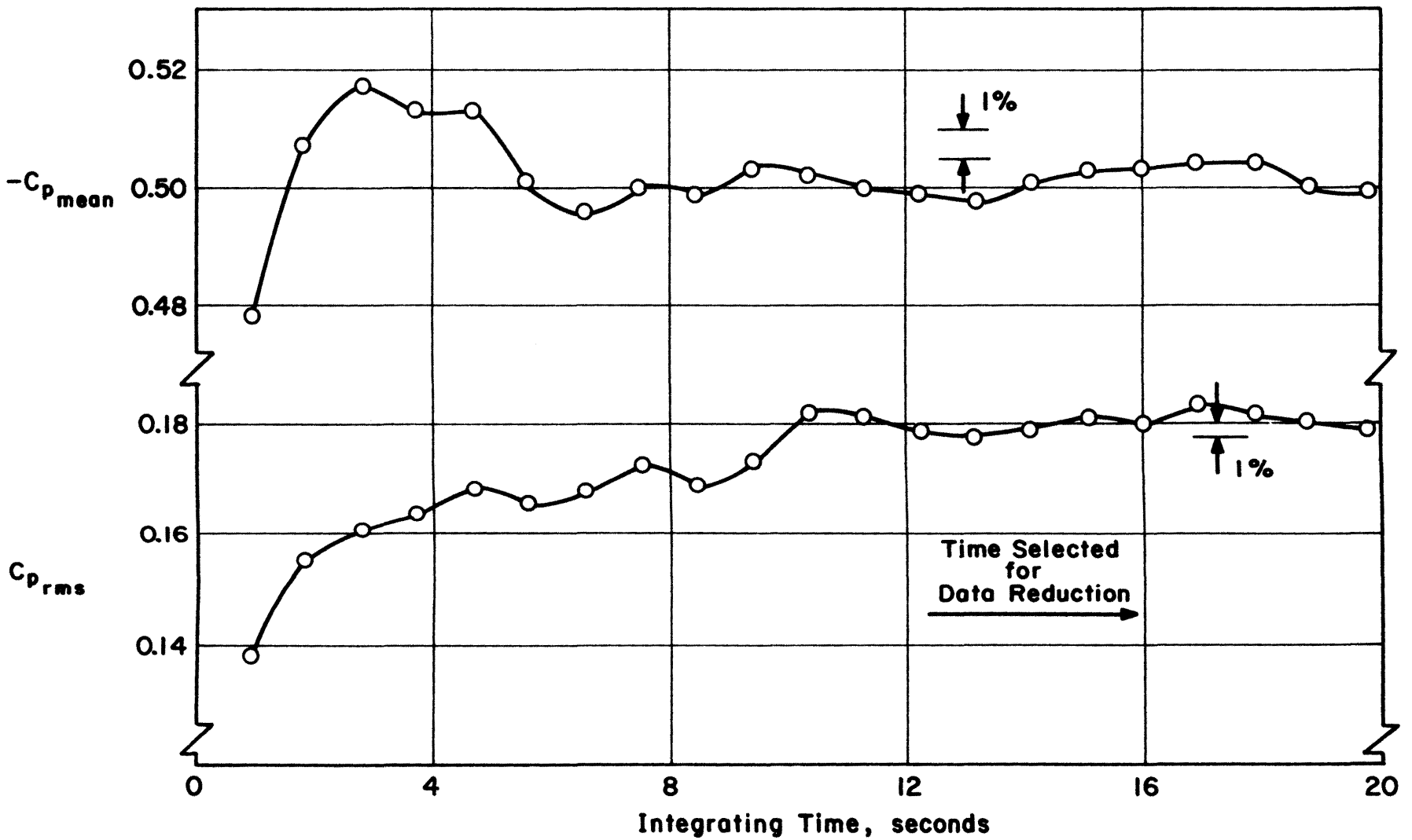

Figure 6 - Data Sampling Time Verification

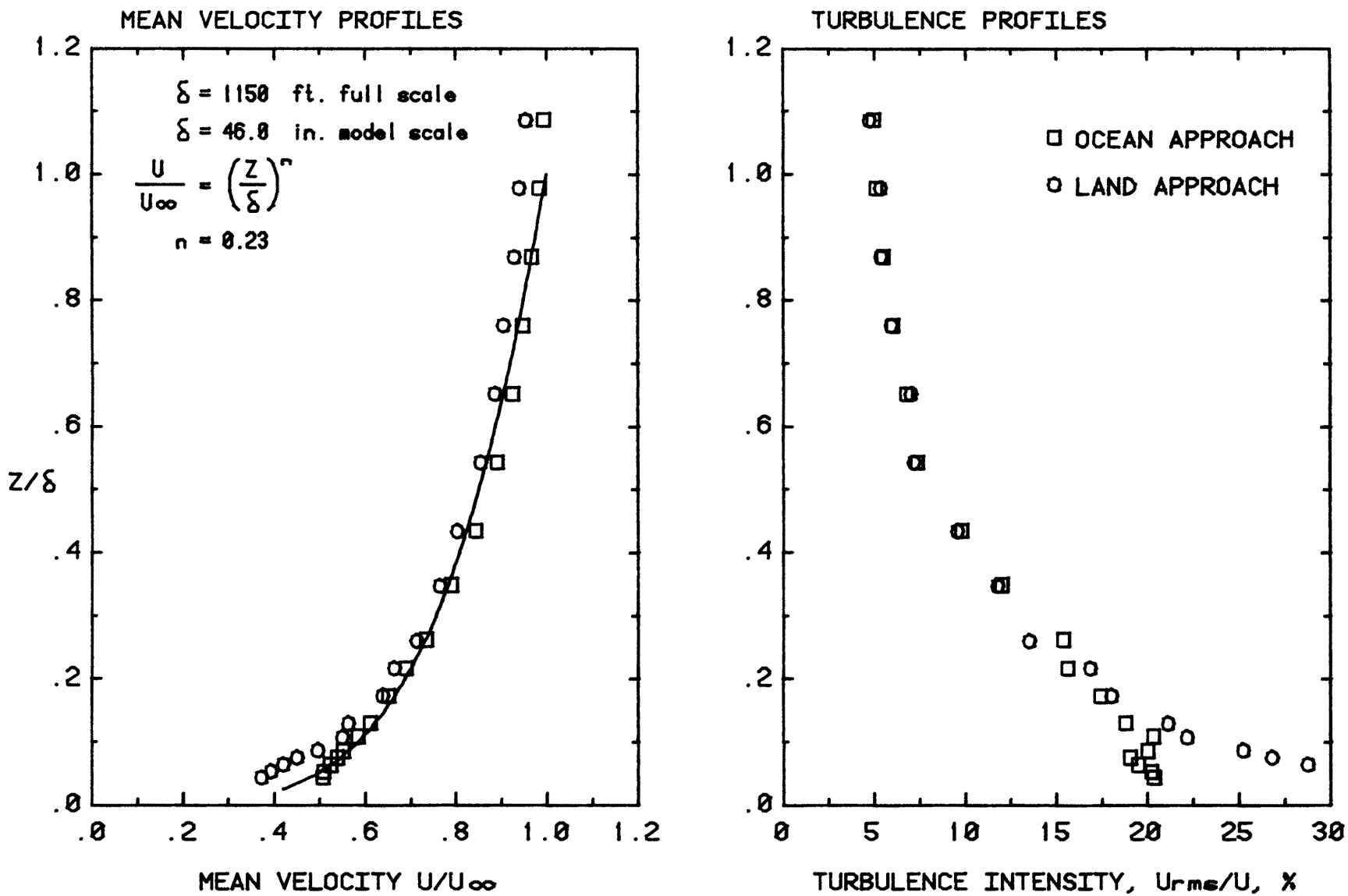

Figure 7. Mean Velocity and Turbulence Profiles Approaching the Model.

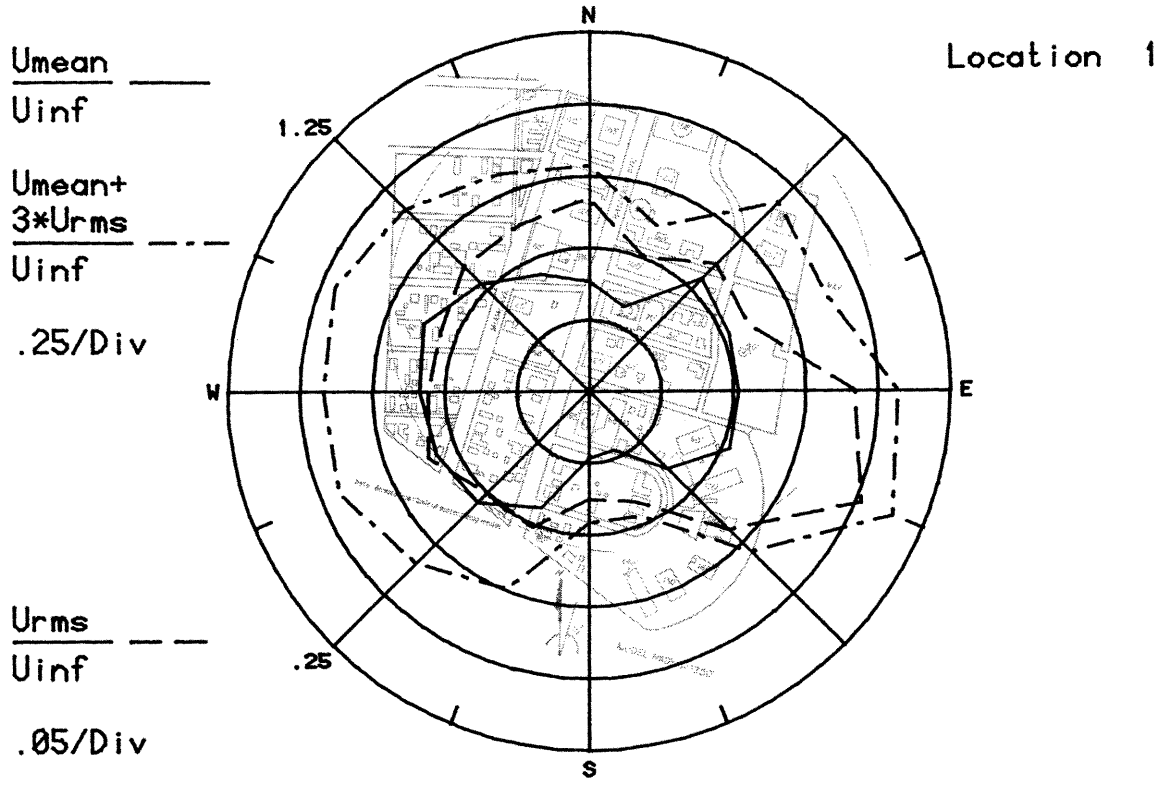

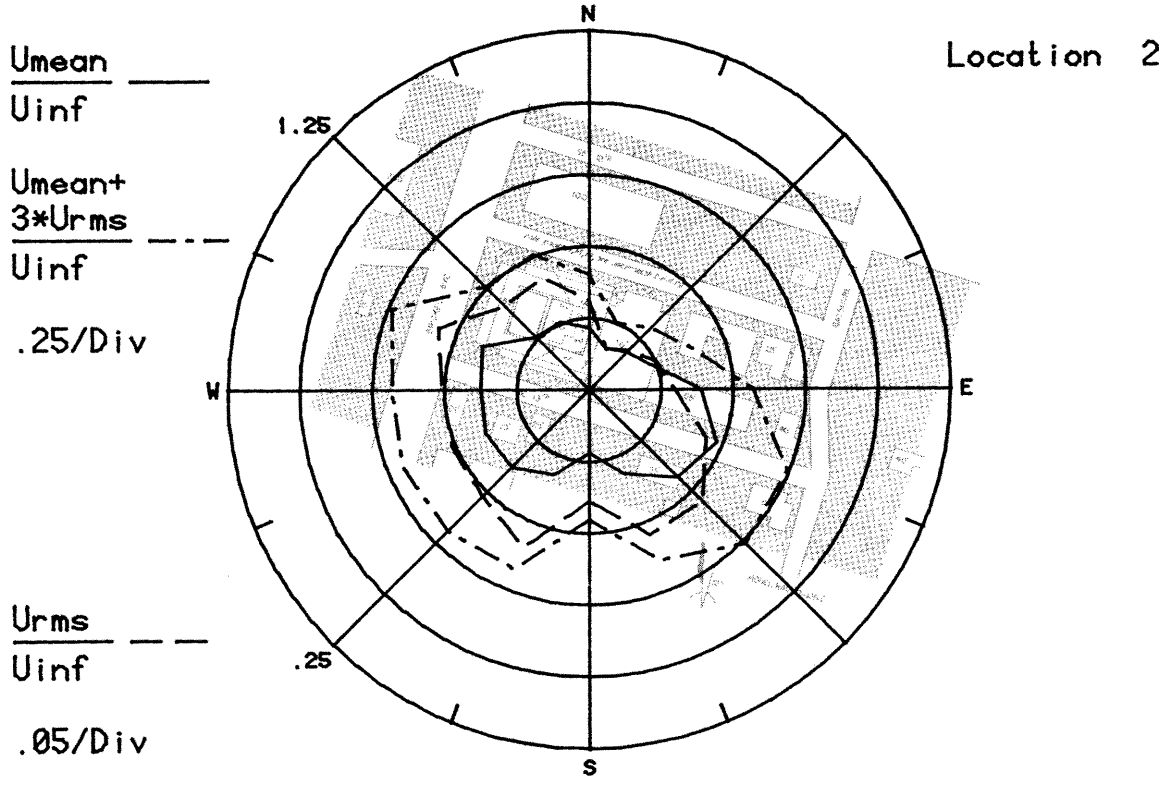

Figure 8a. Mean Velocities and Turbulence Intensities at Pedestrian Locations 1 and 2

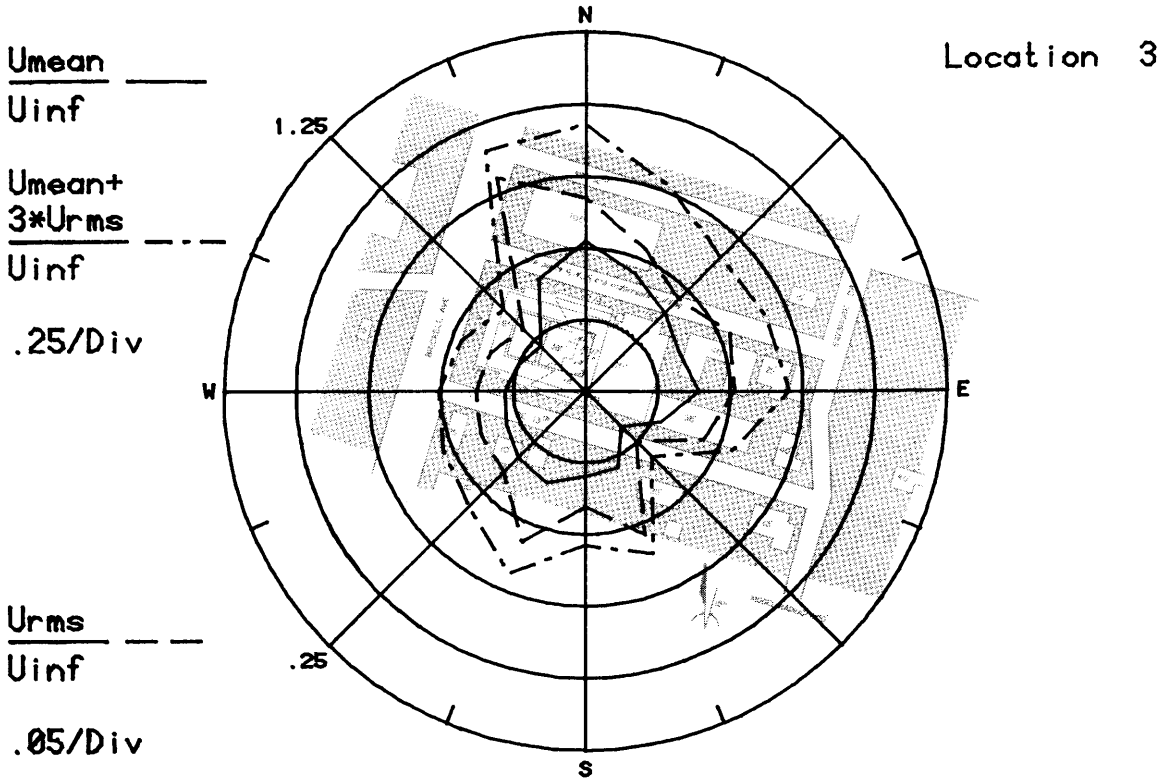

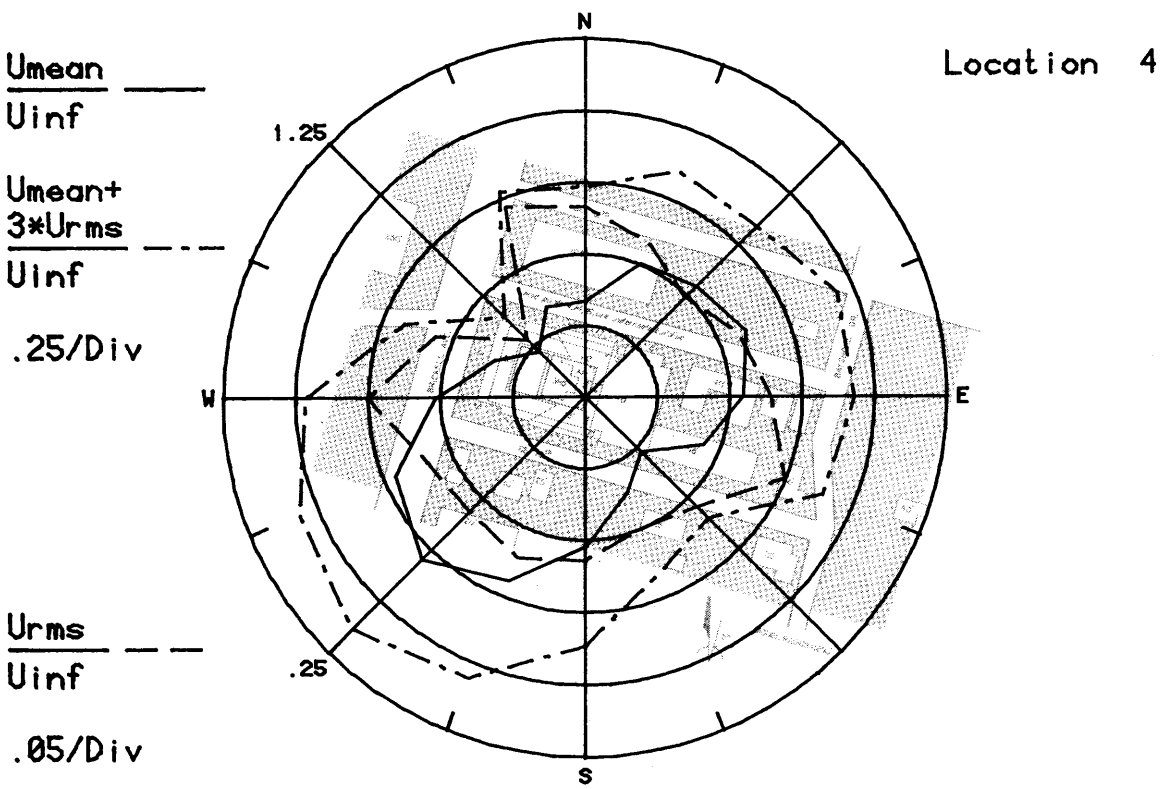

Figure 8b. Mean Velocities and Turbulence Intensities at Pedestrian Locations 3 and 4

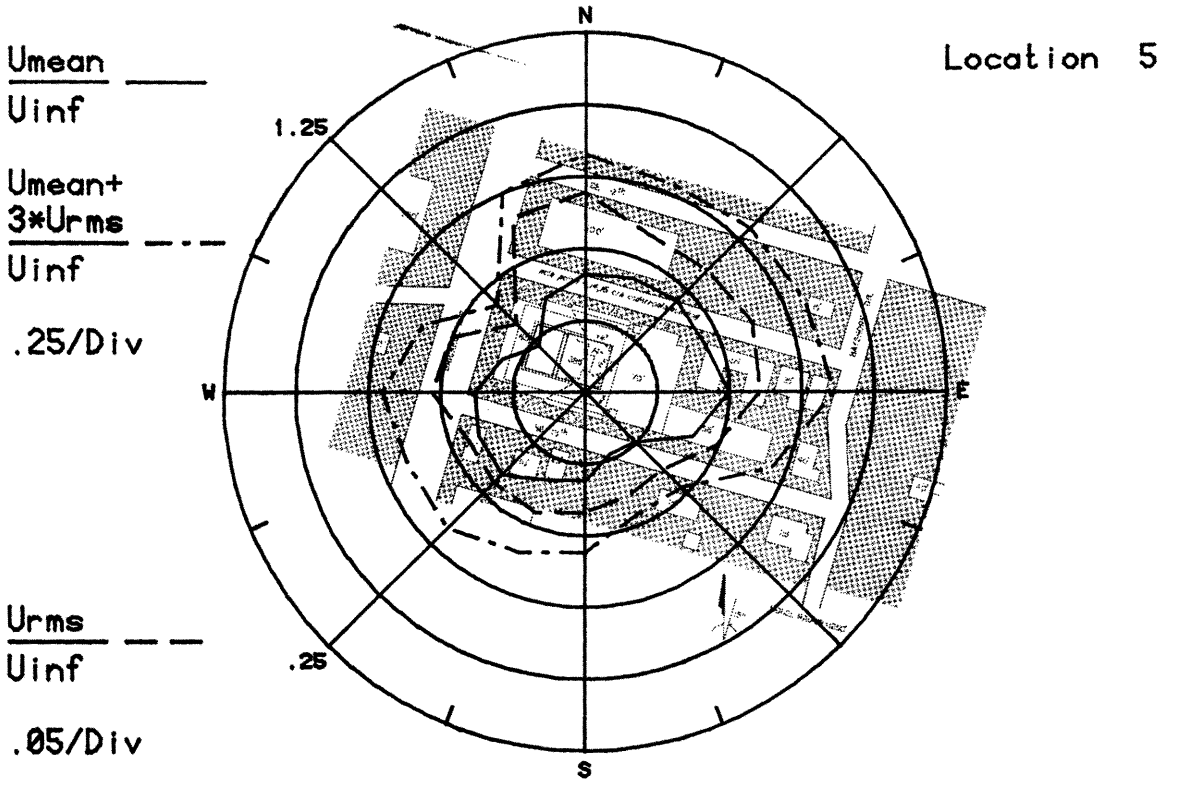

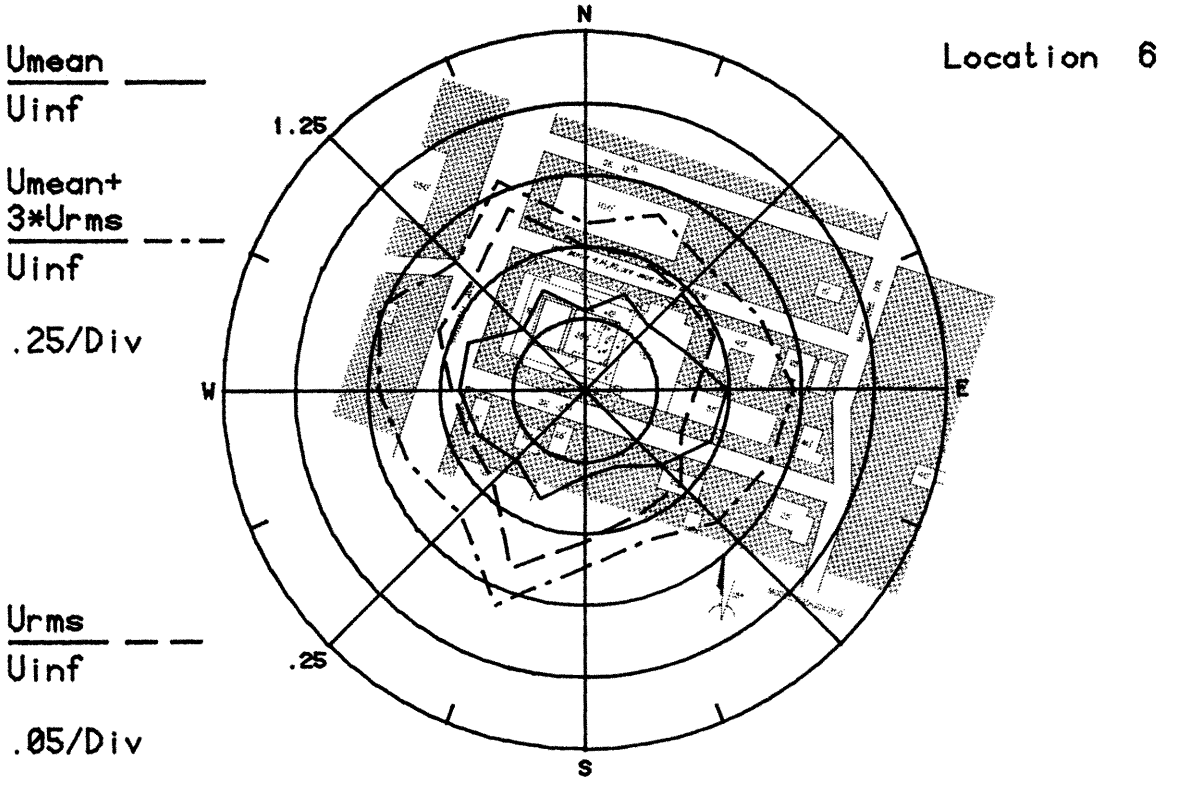

Figure 8c. Mean Velocities and Turbulence Intensities at Pedestrian Locations 5 and 6

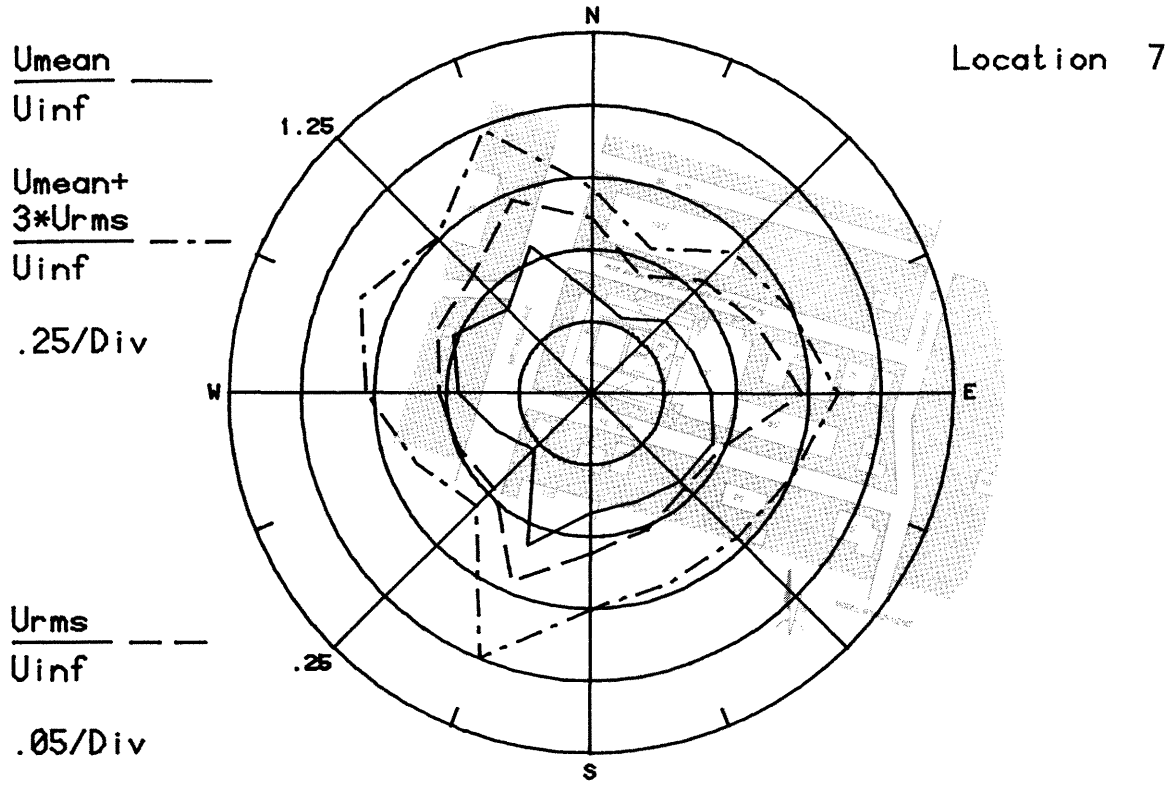

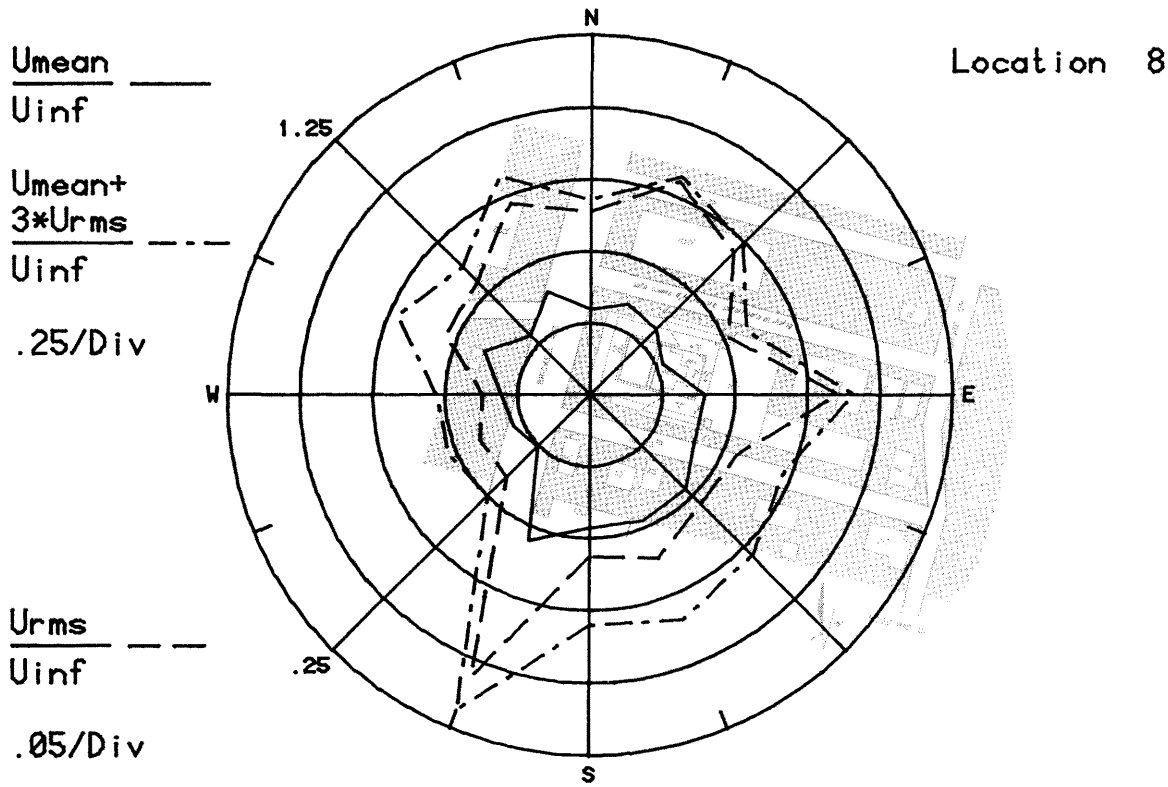

Figure 8d. Mean Velocities and Turbulence Intensities at Pedestrian Locations 7 and 8

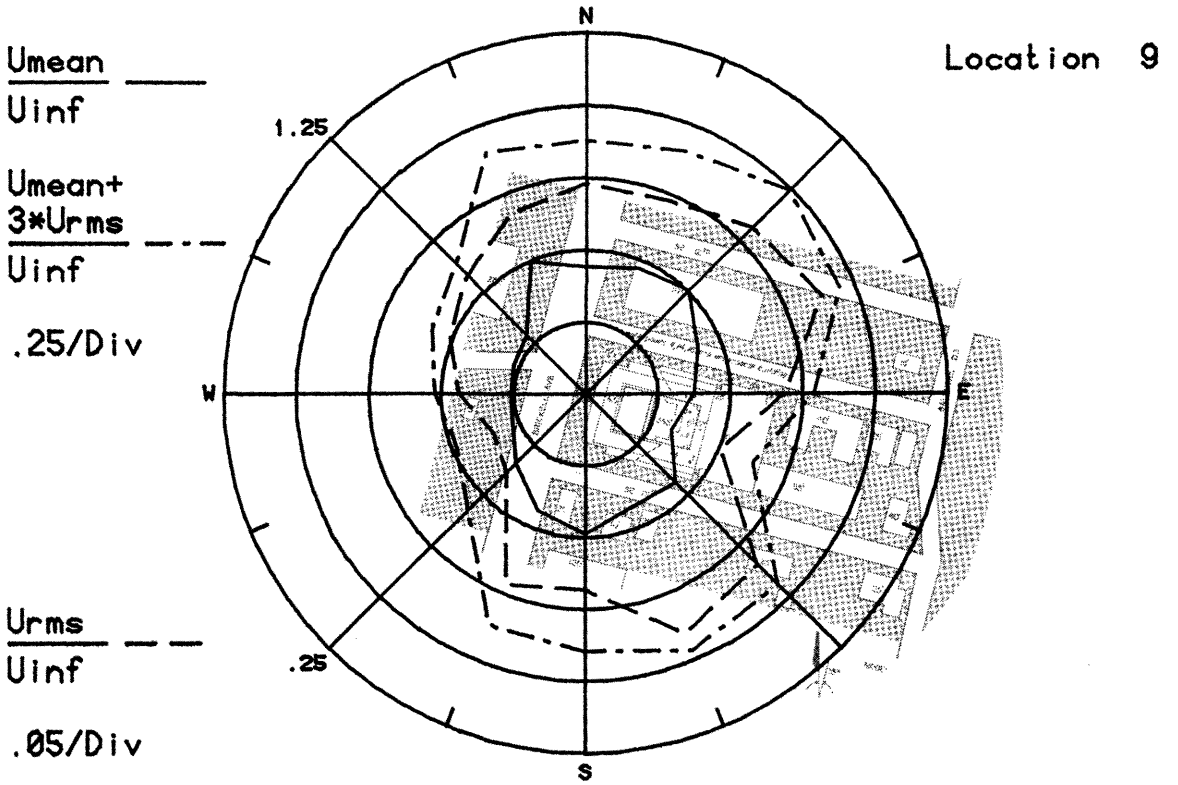

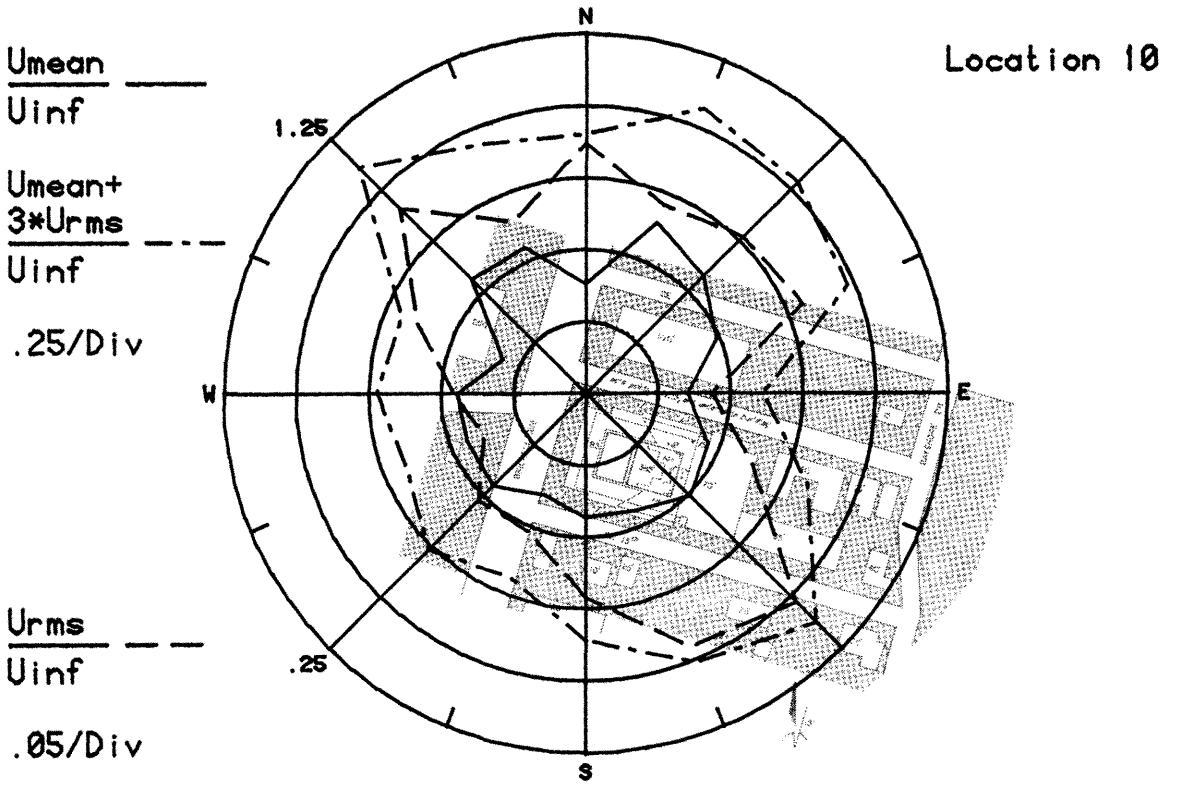

Figure 8e. Mean Velocities and Turbulence Intensities at Pedestrian Locations 9 and 10

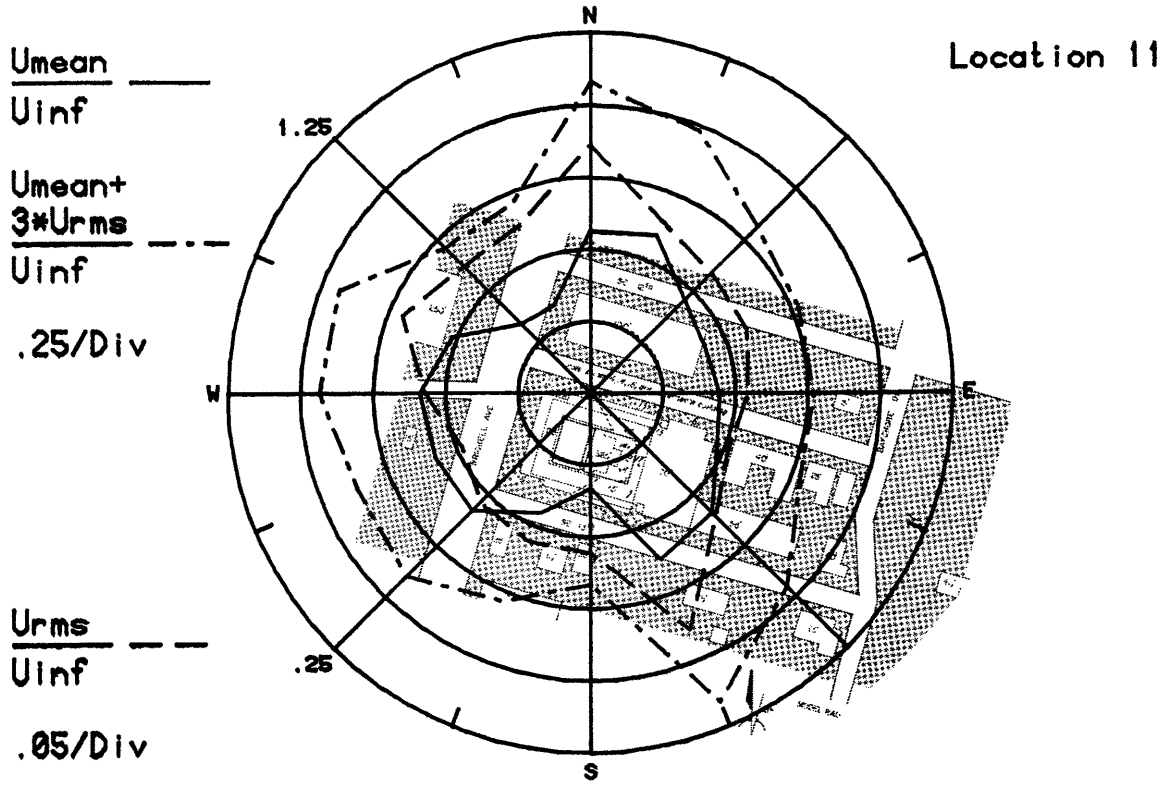

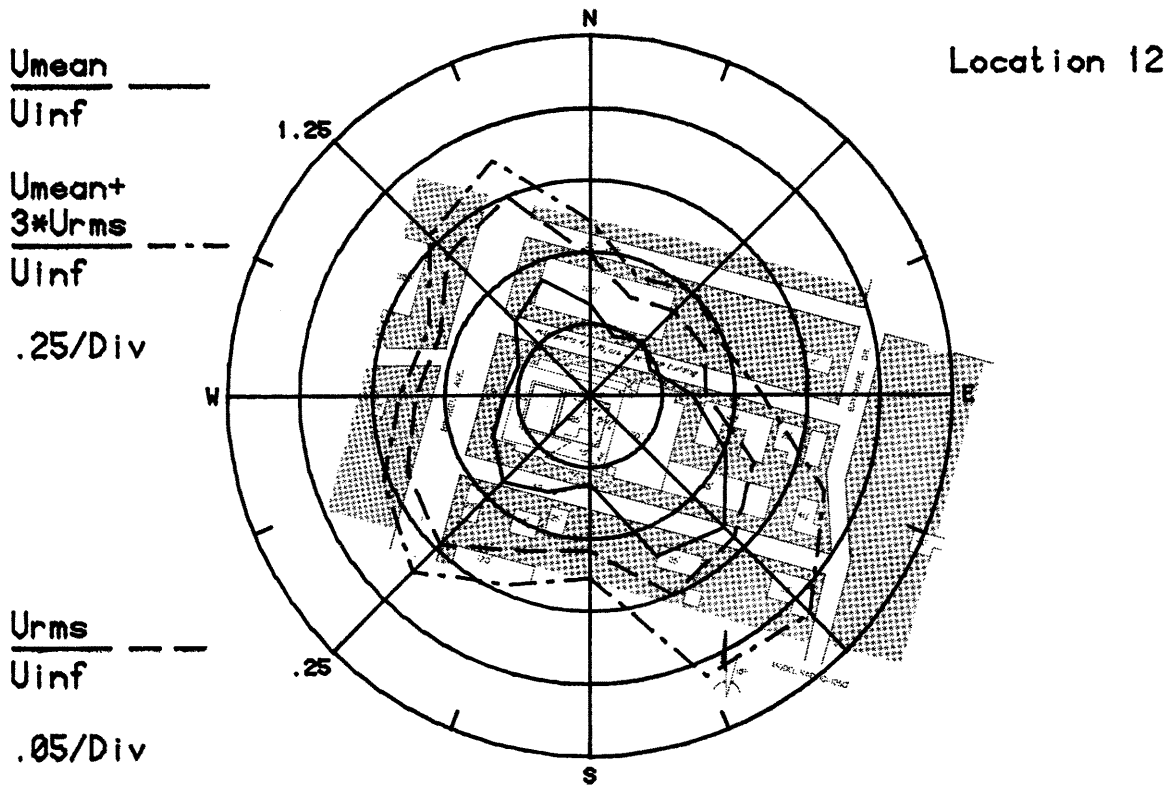

Figure 8f. Mean Velocities and Turbulence Intensities at Pedestrian Locations 11 and 12

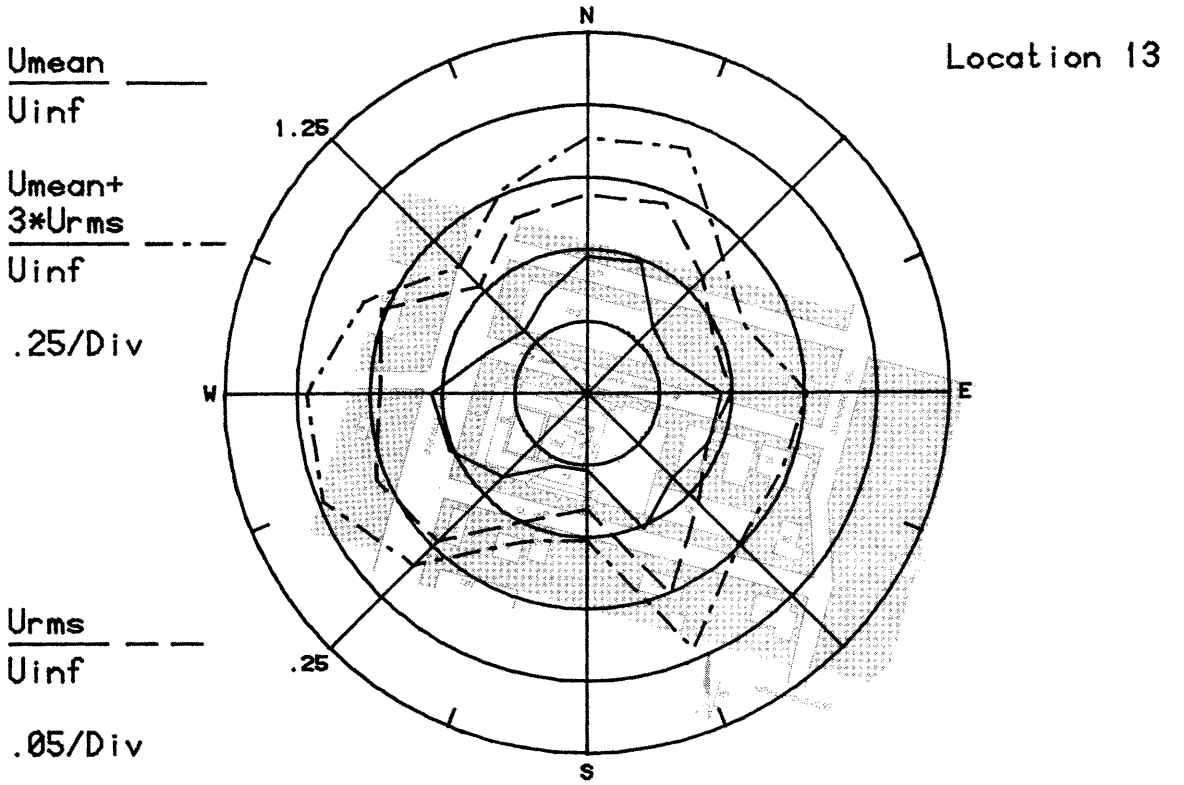

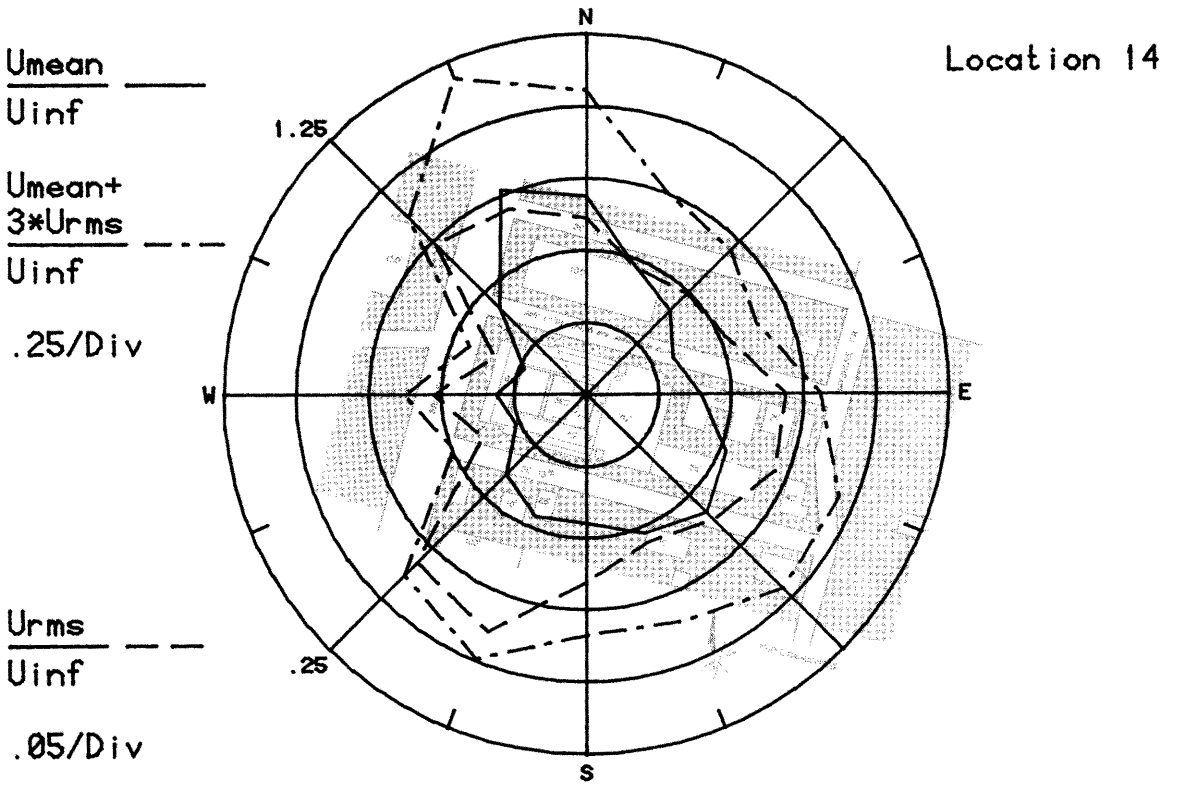

Figure 8g. Mean Velocities and Turbulence Intensities at Pedestrian Locations 13 and 14

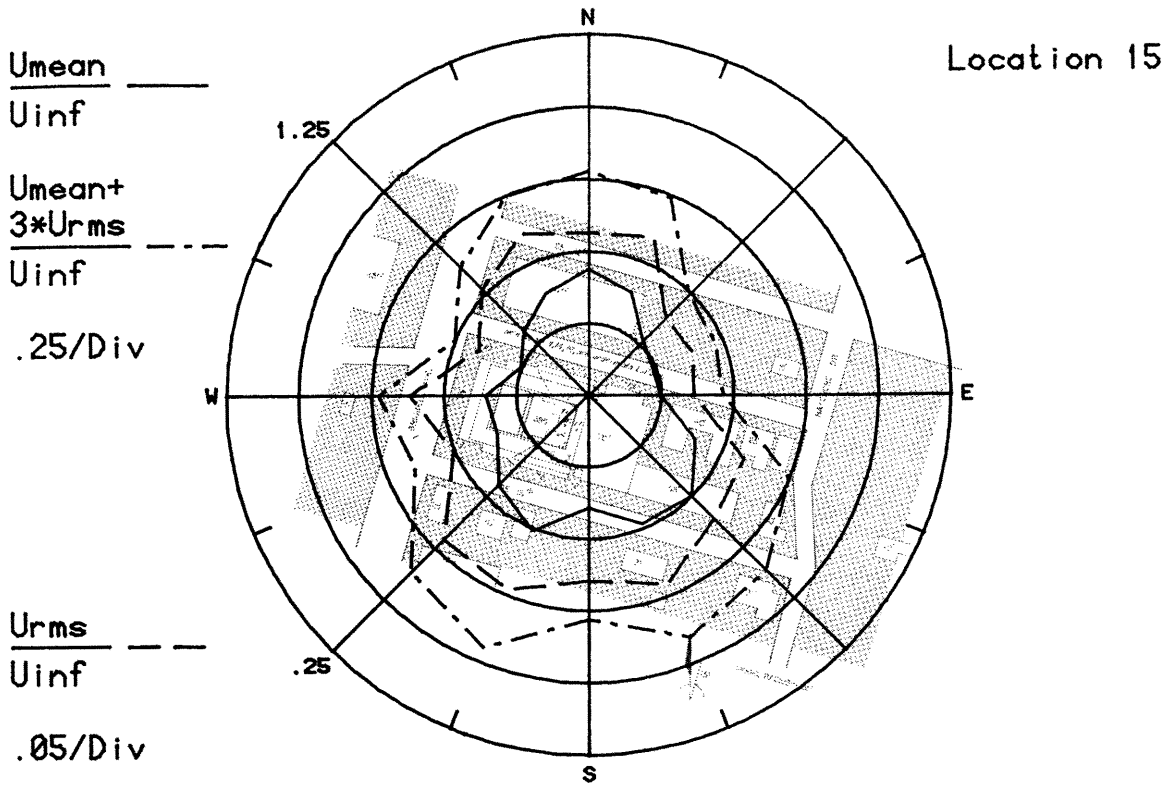

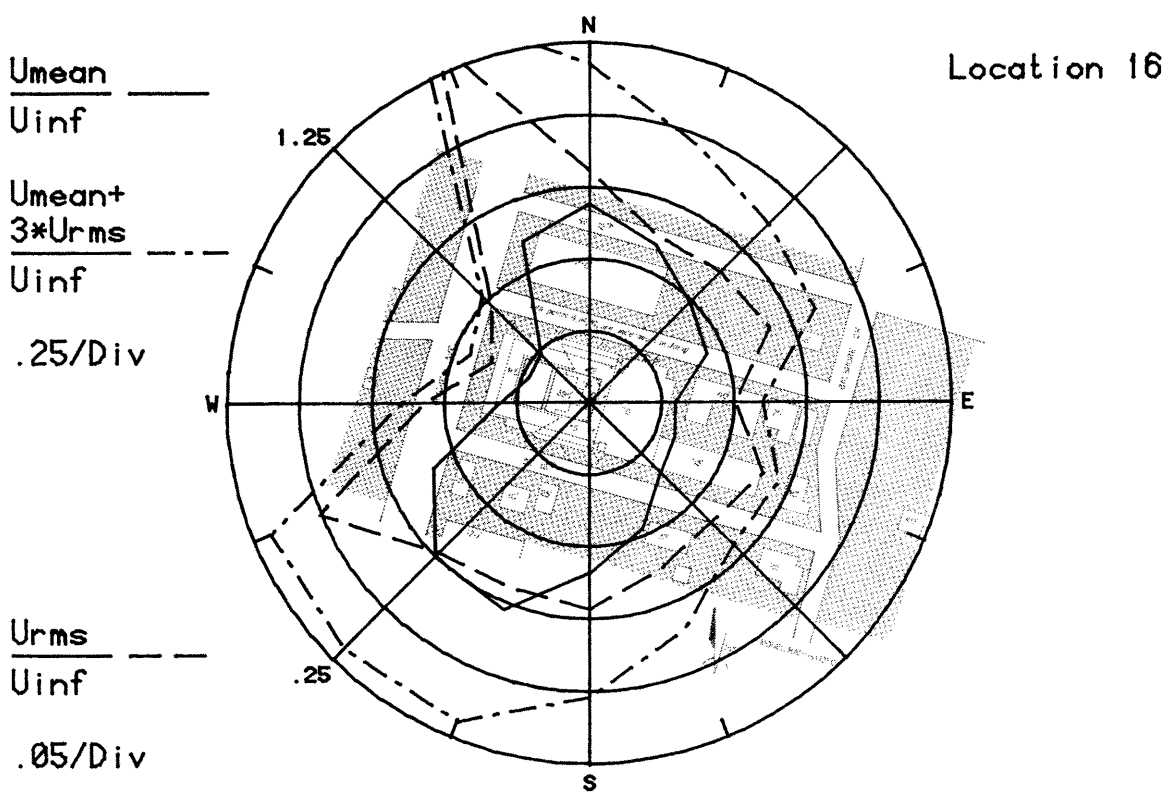

Figure 8h. Mean Velocities and Turbulence Intensities at Pedestrian Locations 15 and 16

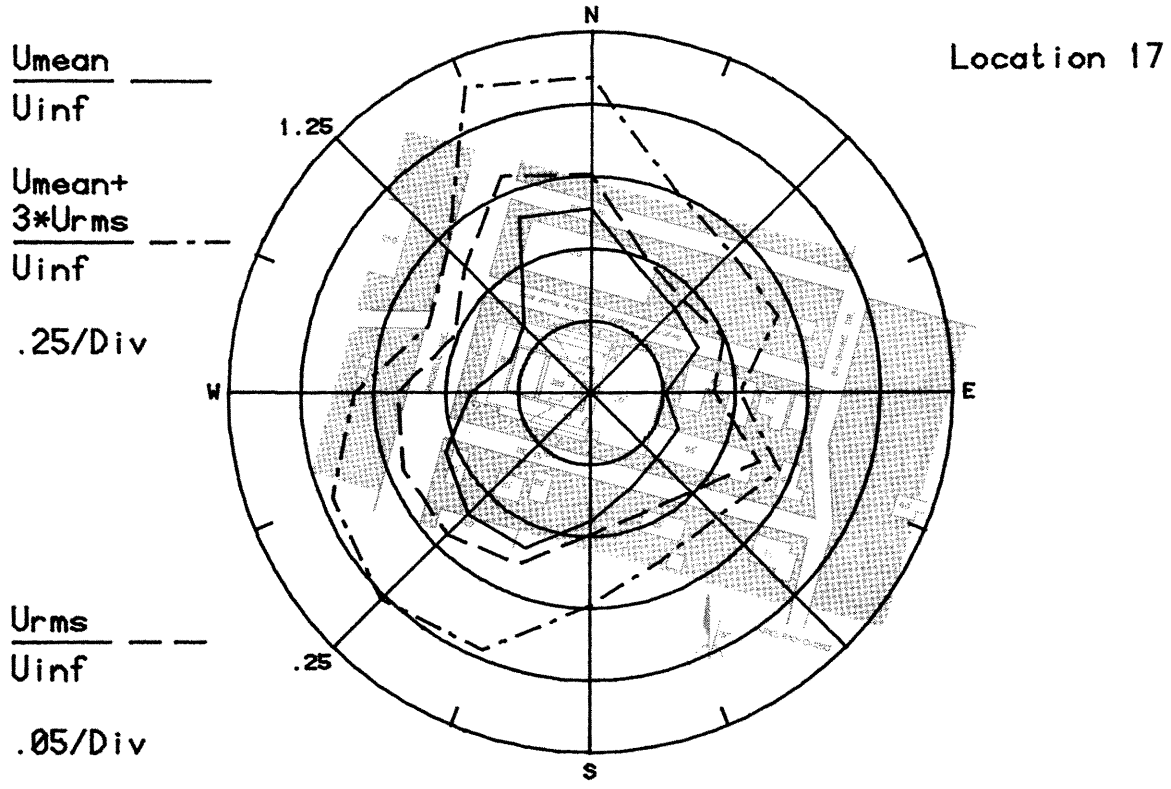

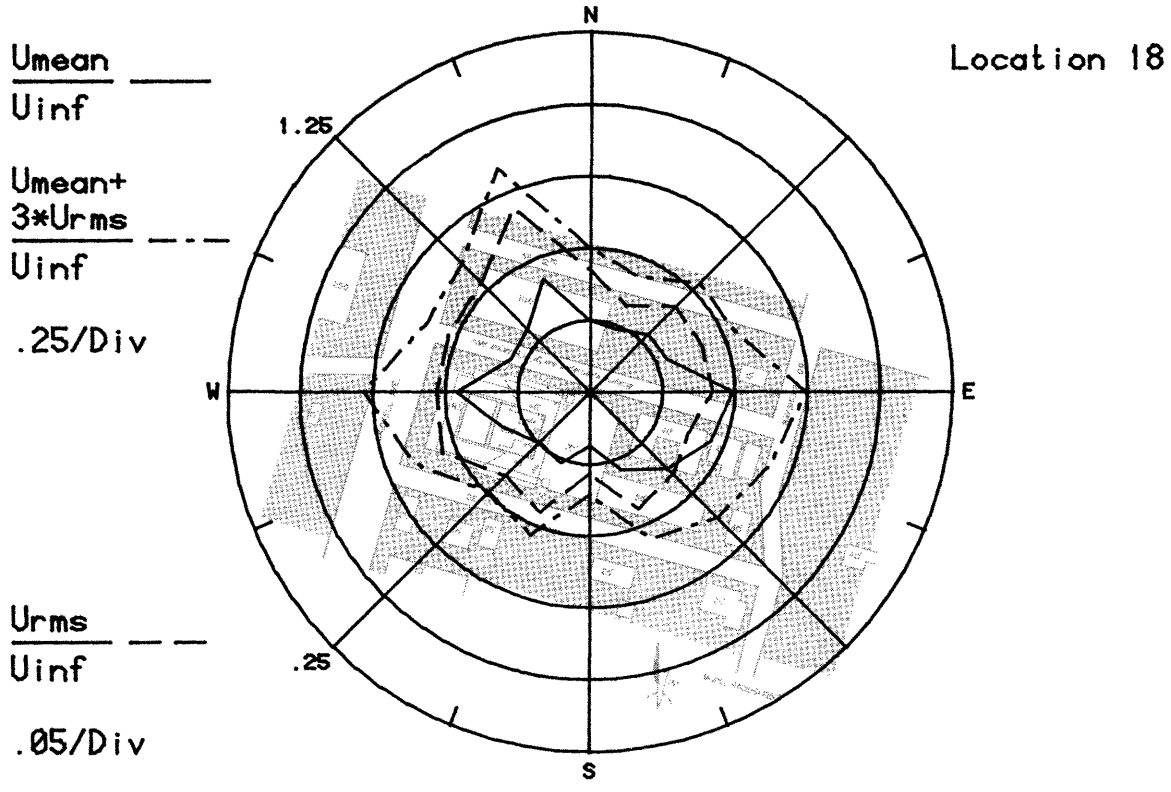

Figure 8i. Mean Velocities and Turbulence Intensities at Pedestrian Locations 17 and 18

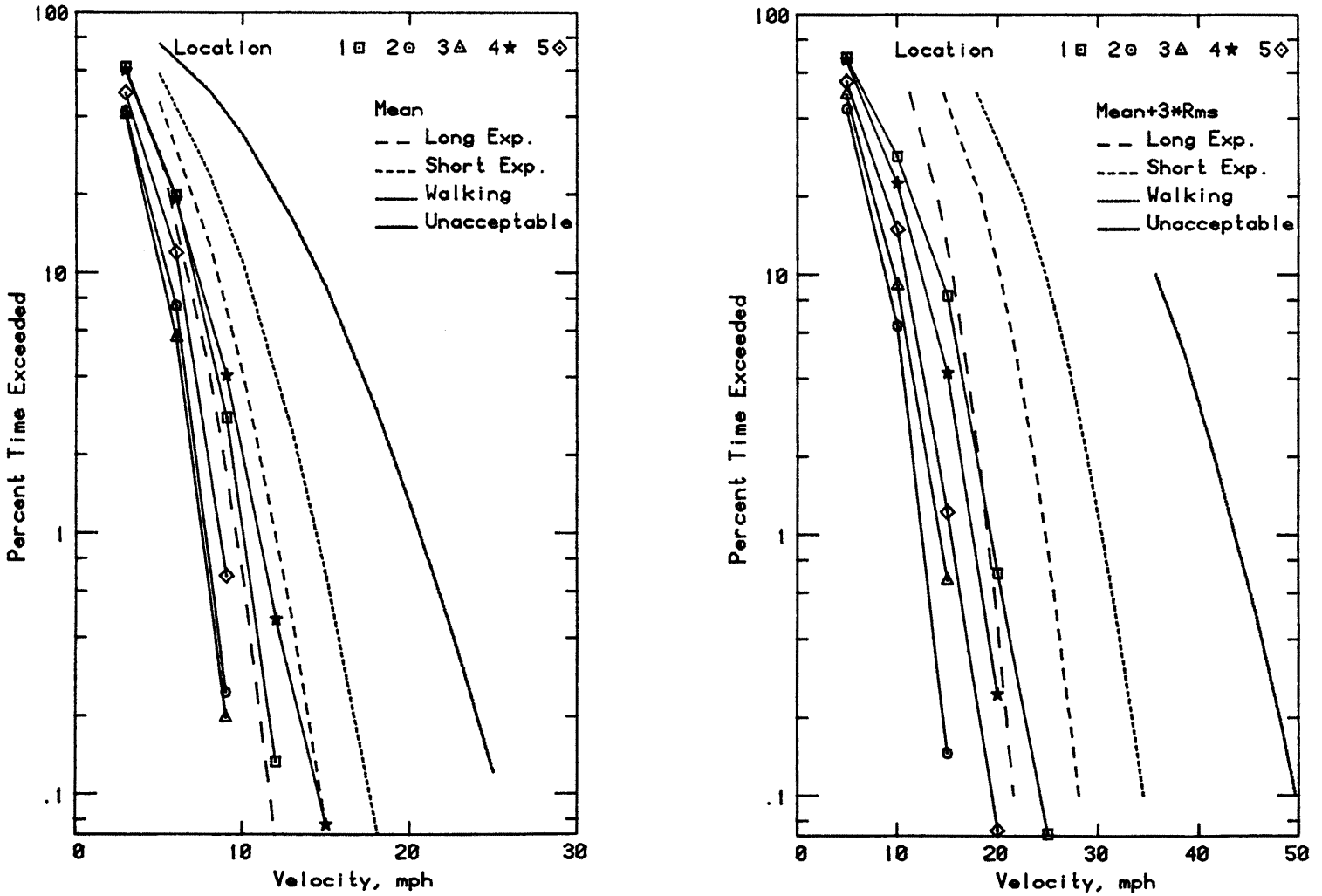

Figure 9a. Wind Velocity Probabilities for Pedestrian Locations

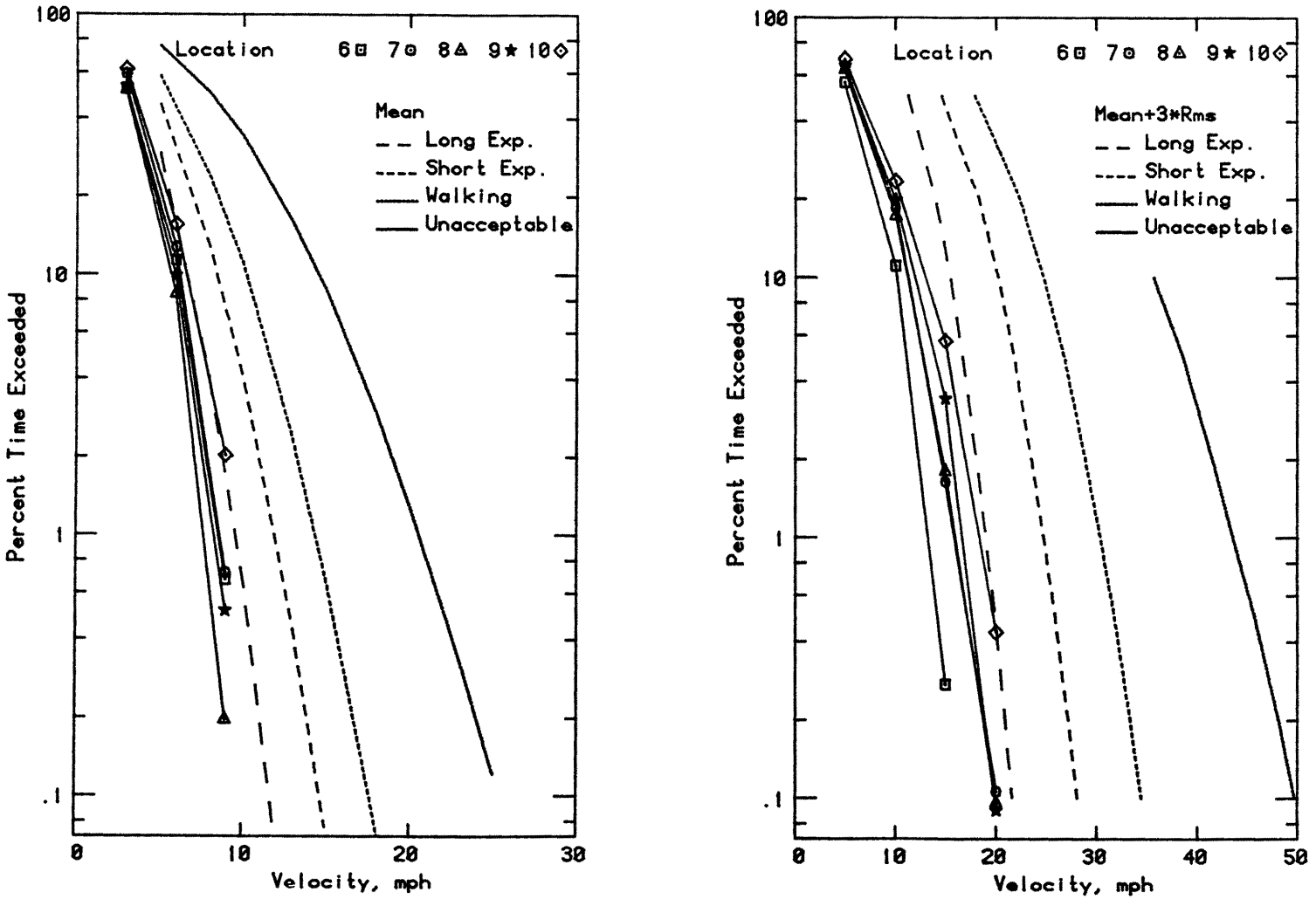

Figure 9b. Wind Velocity Probabilities for Pedestrian Locations

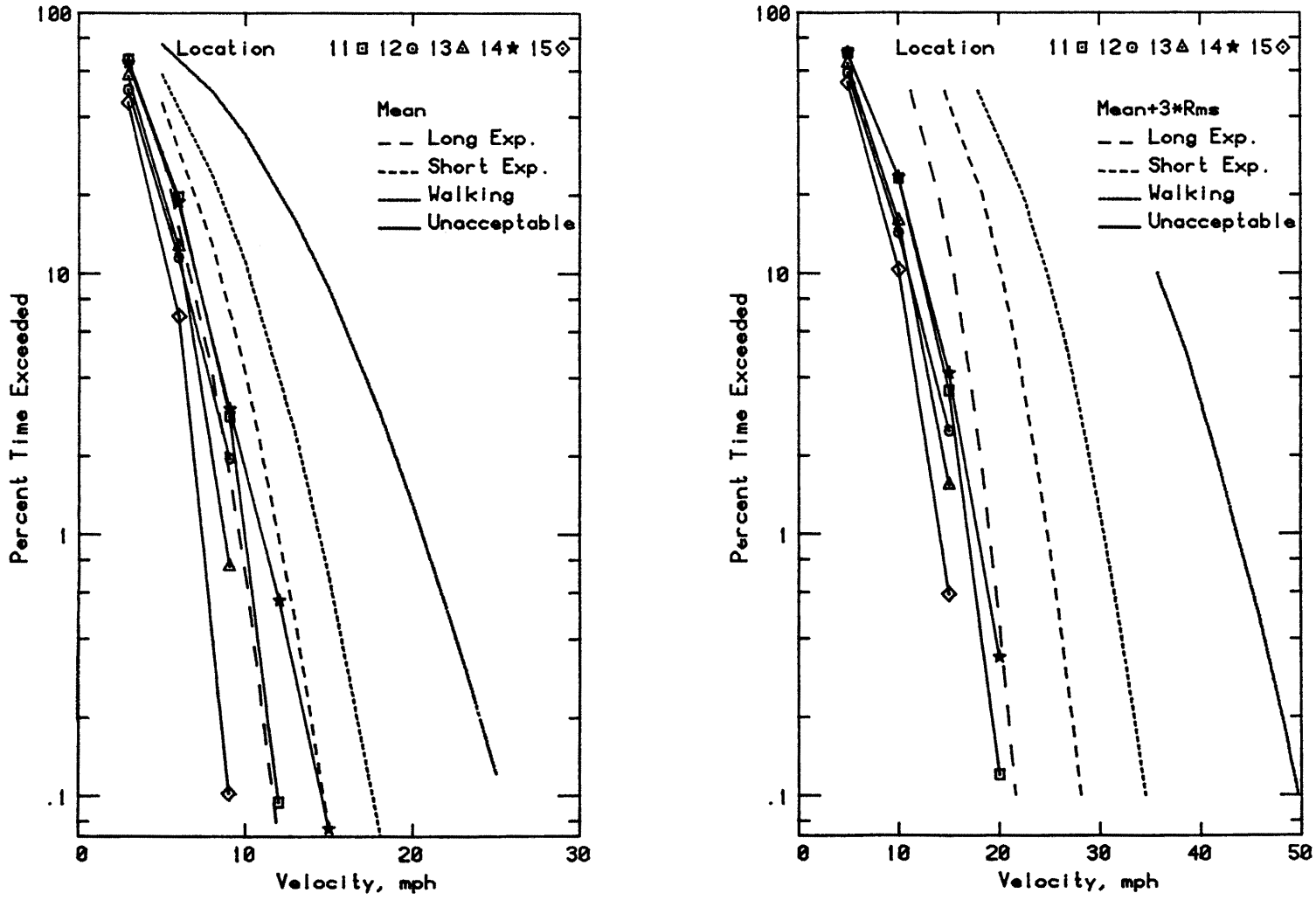

Figure 9c. Wind Velocity Probabilities for Pedestrian Locations

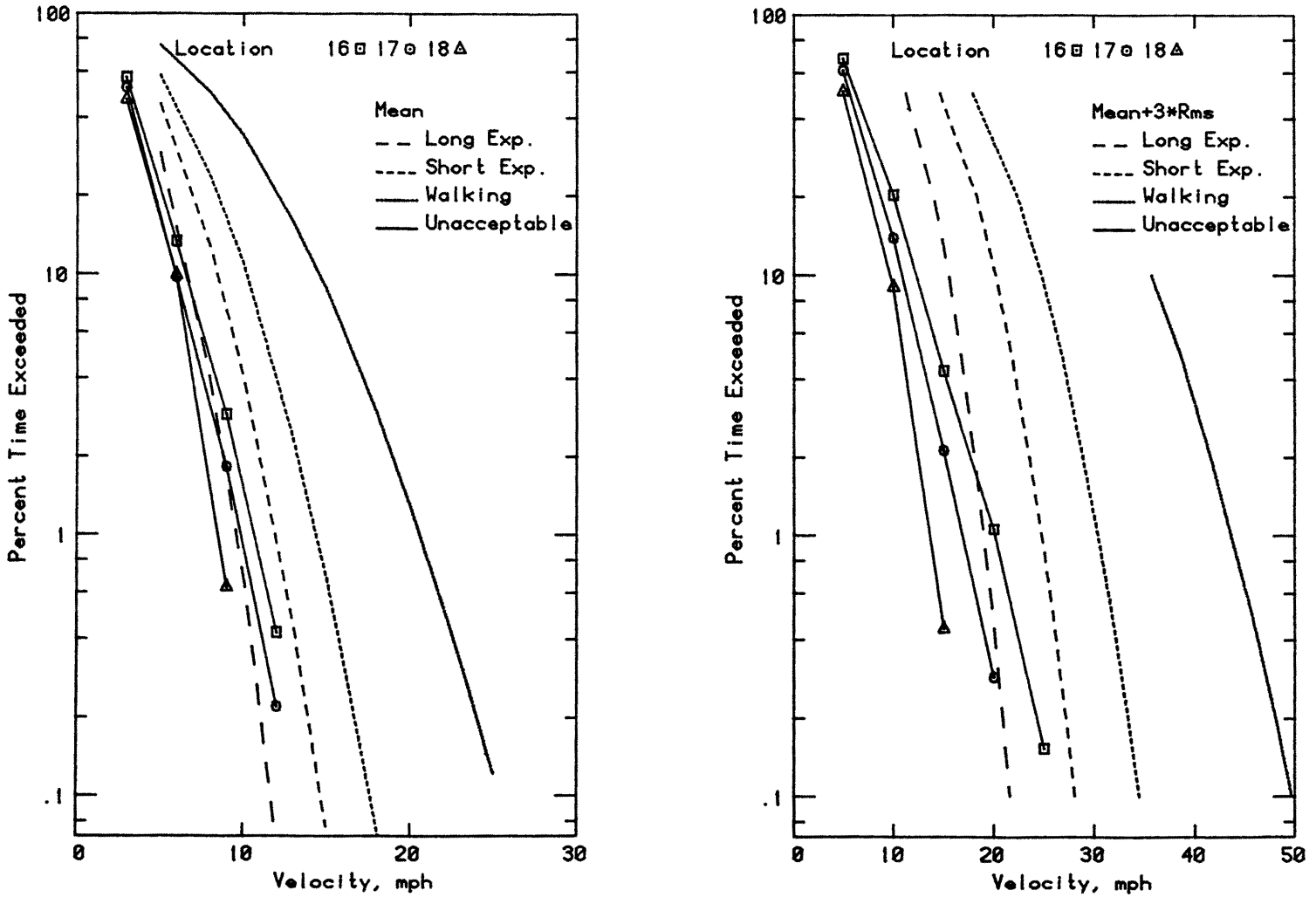

Figure 9d. Wind Velocity Probabilities for Pedestrian Locations

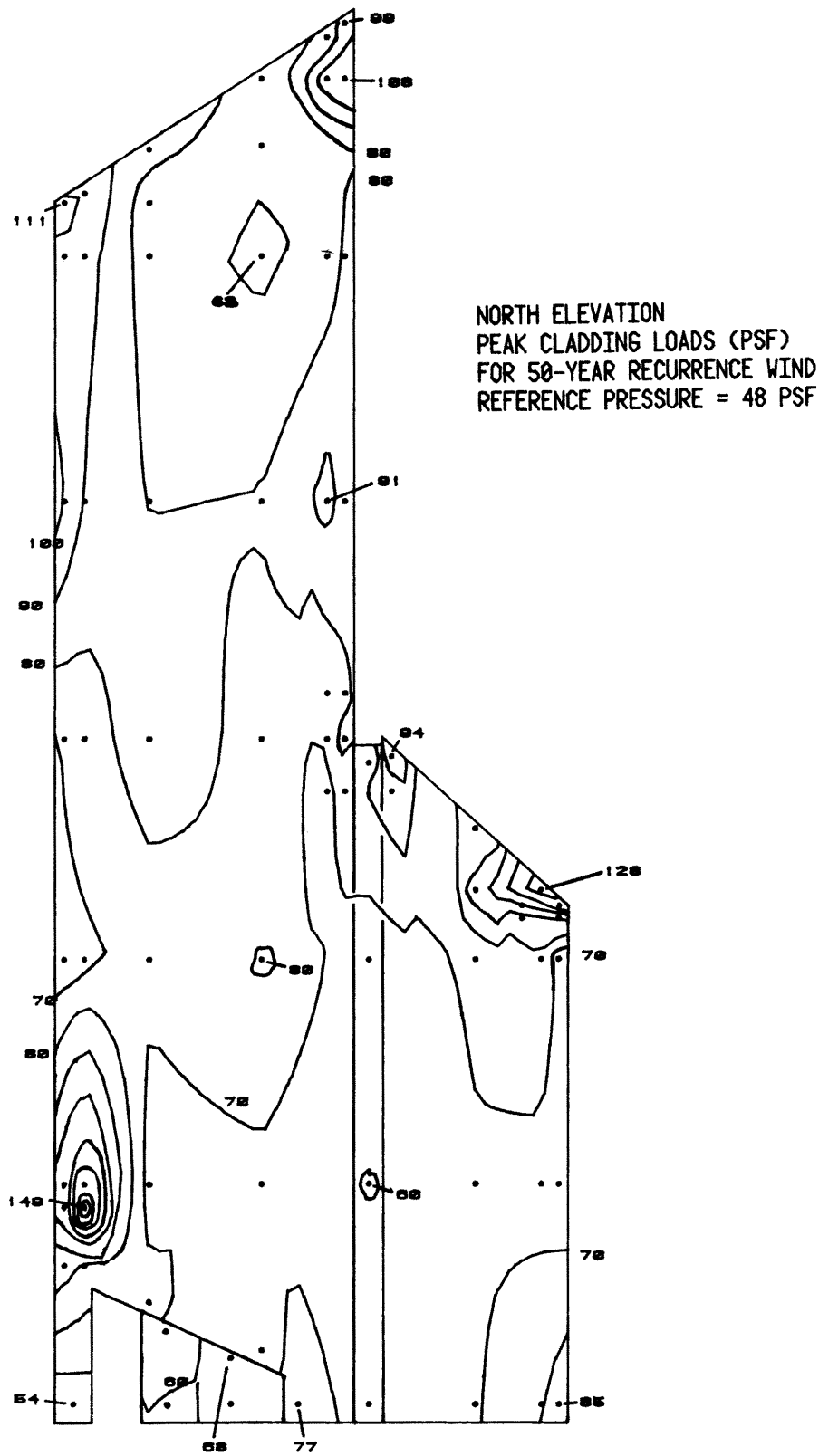

Figure 10a. Peak Pressure Contours on the Building for Cladding Loads

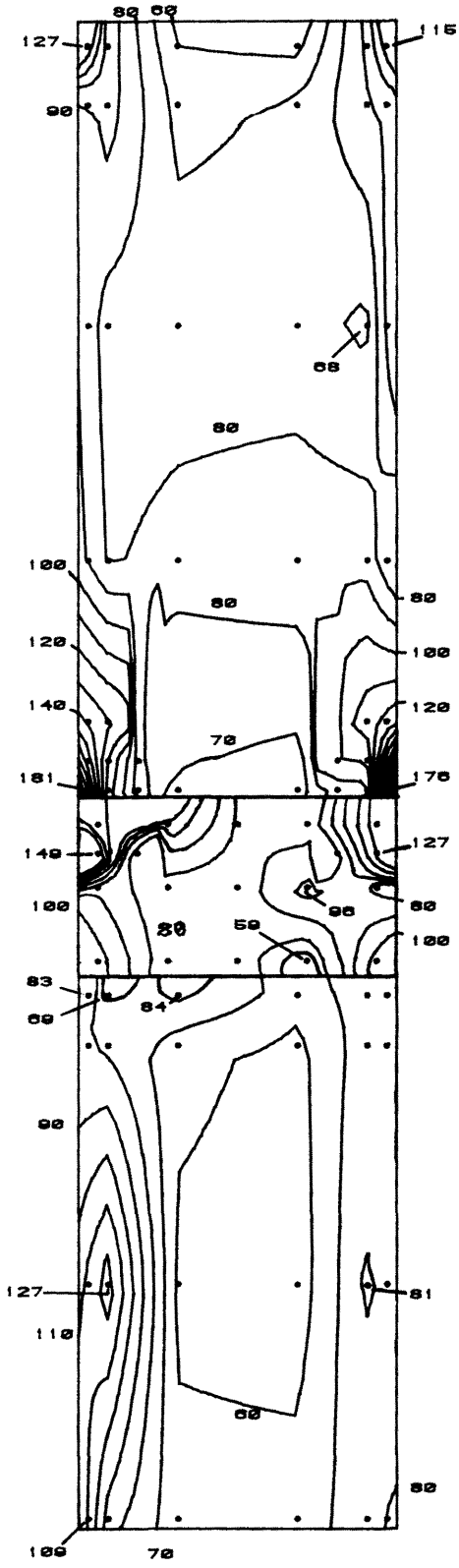

WEST ELEVATION
PEAK CLADDING LOADS (PSF)
FOR 50-YEAR RECURRENCE WIND
REFERENCE PRESSURE = 48 PSF

Figure 10b. Peak Pressure Contours on the Building for Cladding Loads

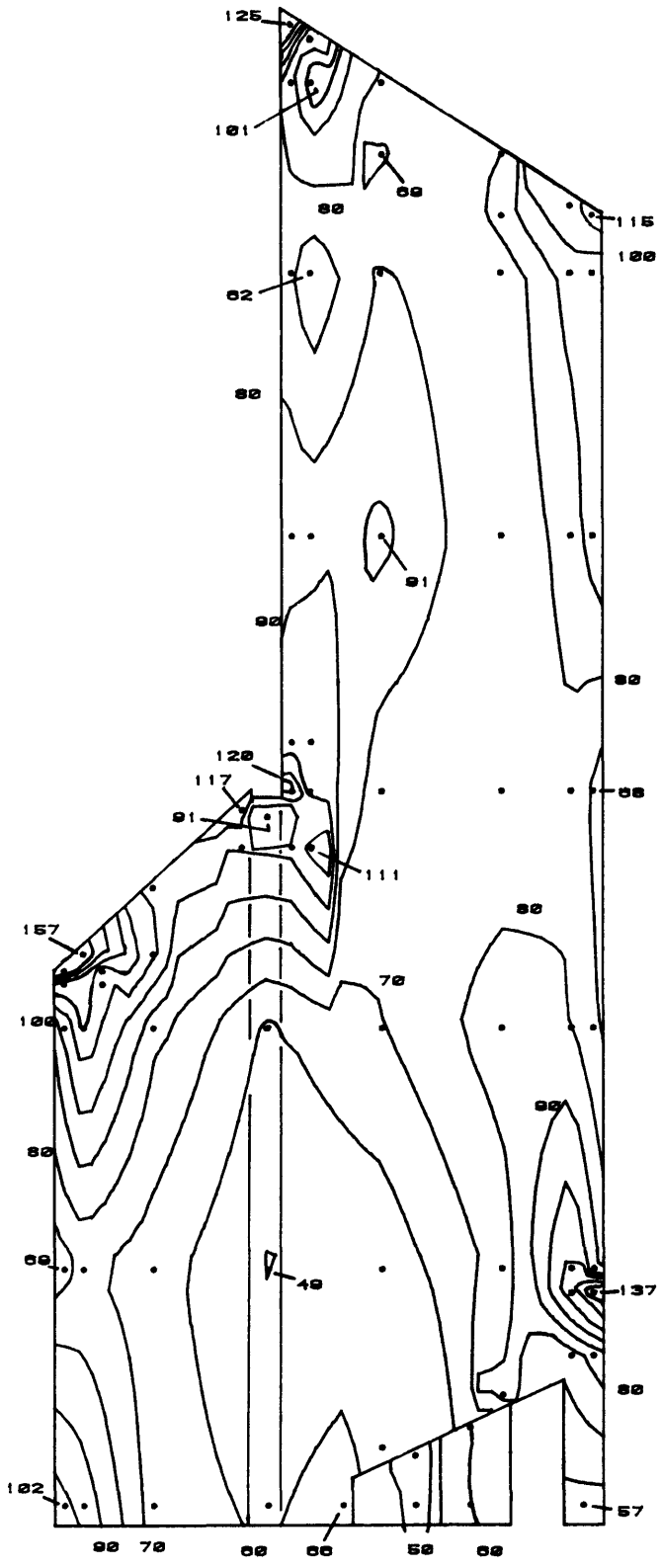

SOUTH ELEVATION
PEAK CLADDING LOADS (PSF)
FOR 50-YEAR RECURRENCE WIND
REFERENCE PRESSURE = 48 PSF

Figure 10c. Peak Pressure Contours on the Building for Cladding Loads

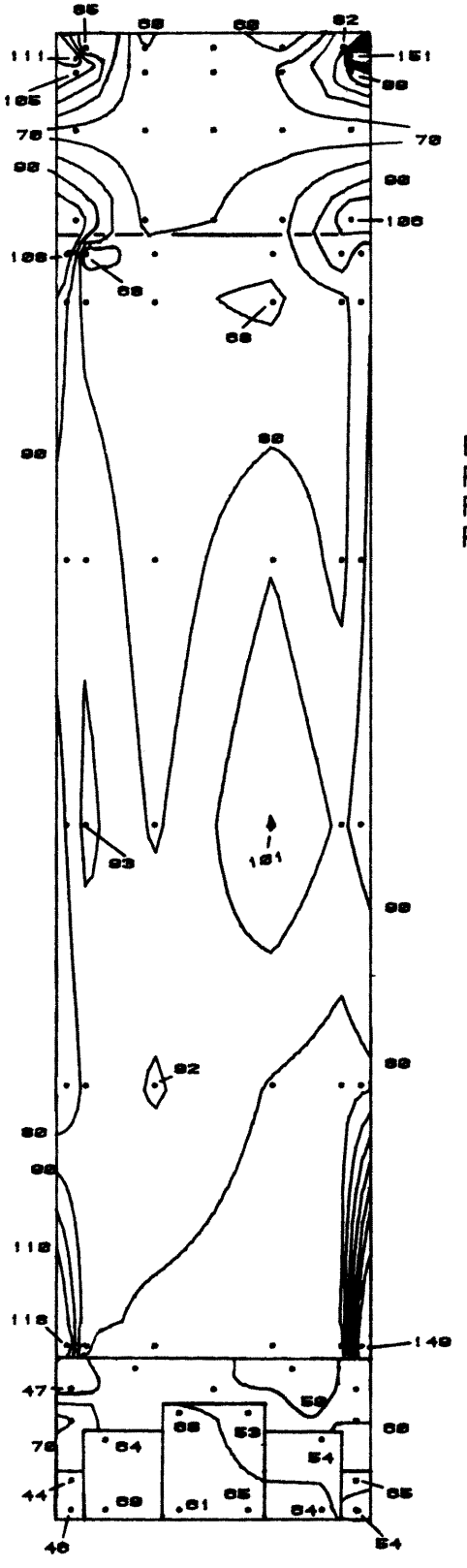

Figure 10d. Peak Pressure Contours on the Building for Cladding Loads

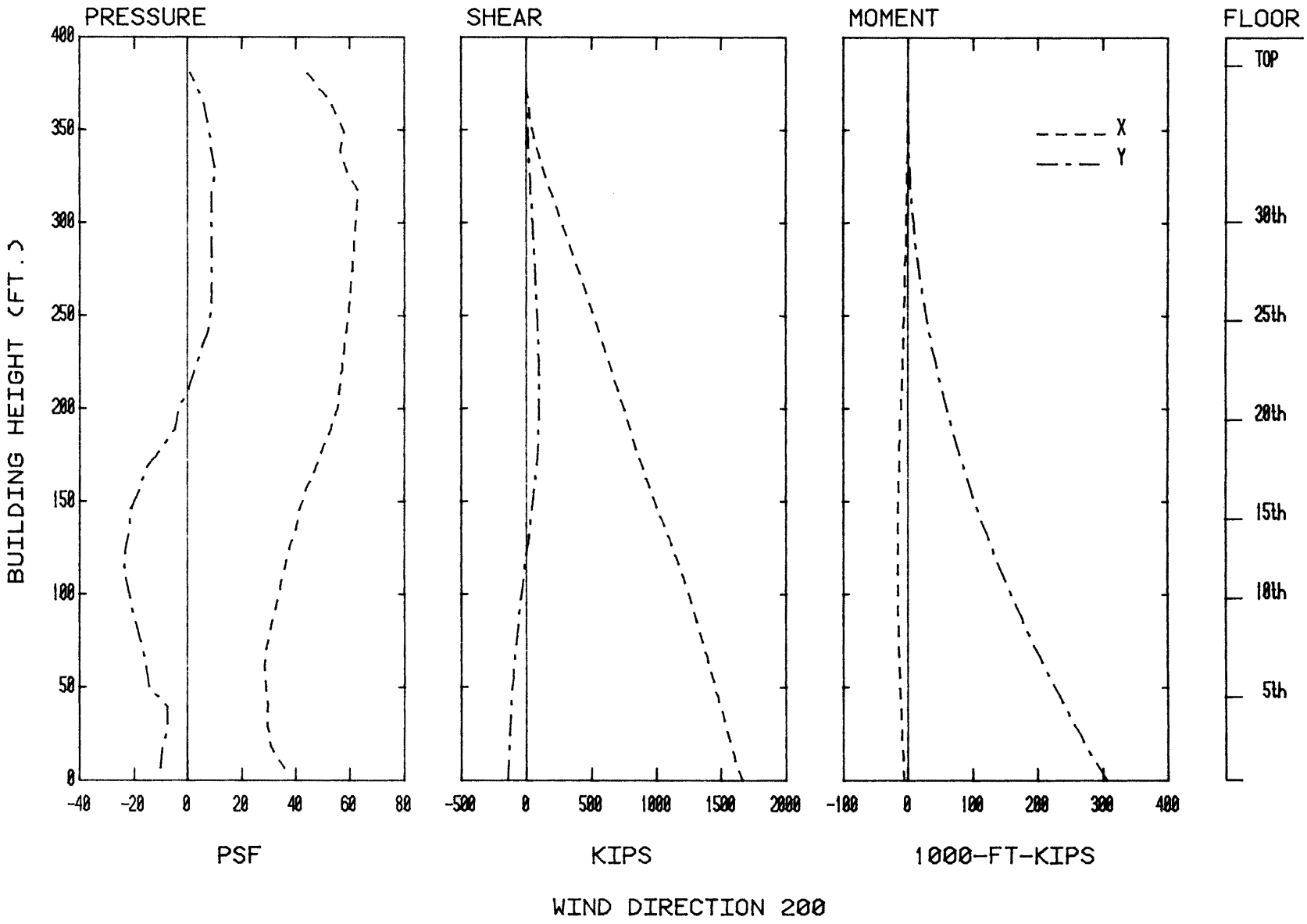

Figure 11. Load, Shear, and Moment Diagrams for Selected Wind Directions

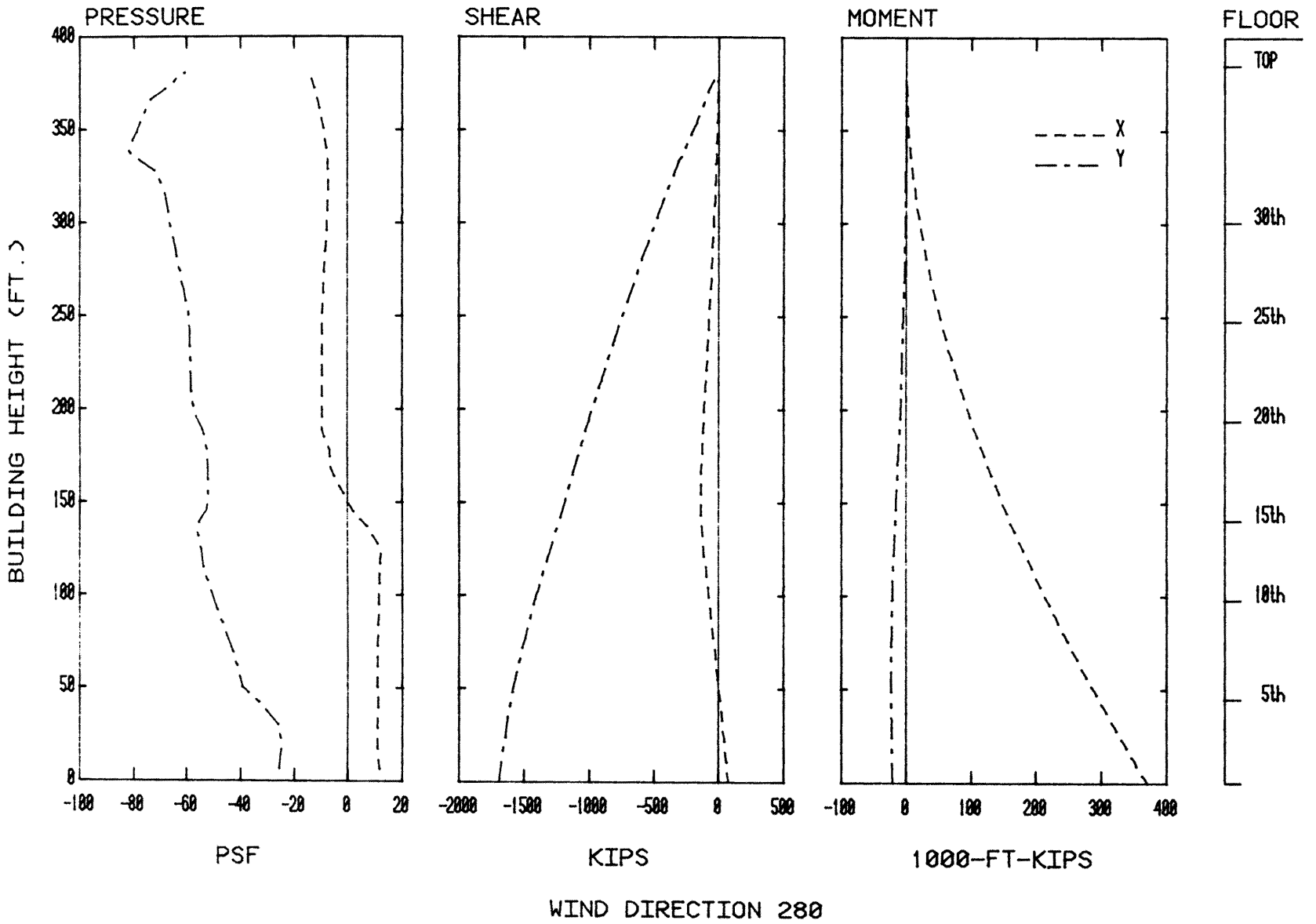

Figure 11. Load, Shear, and Moment Diagrams for Selected Wind Directions

TABLES

TABLE 1

MOTION PICTURE SCENE GUIDE

Run #	Approach Wind Azimuth, degrees
1	0
2	45
3	90
4	135
5	180
6	225
7	270
8	315

TABLE 2--PEDESTRIAN WIND VELOCITIES AND TURBULENCE INTENSITIES

1221 BRICKELL BUILDING

LOCATION 1

WIND AZIMUTH	UMEAN/UINF (PERCENT)	URMS/UINF (PERCENT)	UMEAN+3*URMS/UINF (PERCENT)
0.00	38.3	13.4	78.5
22.50	31.9	10.0	62.0
45.00	55.3	12.5	92.7
67.50	52.5	12.0	88.4
90.00	51.8	18.4	107.0
112.50	52.6	20.4	113.6
135.00	38.3	13.7	79.3
157.50	22.0	8.3	47.0
180.00	23.2	7.5	45.8
202.50	43.7	10.2	74.4
225.00	54.6	9.9	84.4
247.50	57.3	12.0	93.4
270.00	58.7	11.1	92.1
292.50	61.9	11.1	95.1
315.00	53.2	12.3	90.0
337.50	44.1	12.6	81.8

LOCATION 2

WIND AZIMUTH	UMEAN/UINF (PERCENT)	URMS/UINF (PERCENT)	UMEAN+3*URMS/UINF (PERCENT)
0.00	21.6	6.2	40.2
22.50	15.8	3.1	25.1
45.00	18.5	3.9	30.1
67.50	22.9	5.1	38.1
90.00	38.9	5.9	56.6
112.50	47.9	8.8	74.1
135.00	43.0	11.1	76.3
157.50	31.4	10.9	64.3
180.00	22.1	7.7	45.3
202.50	31.8	11.9	67.3
225.00	37.8	10.5	69.2
247.50	39.0	10.3	69.8
270.00	37.6	10.2	68.2
292.50	39.9	11.3	73.8
315.00	26.1	8.2	50.8
337.50	25.7	8.4	50.8

LOCATION 3

WIND AZIMUTH	UMEAN/UINF (PERCENT)	URMS/UINF (PERCENT)	UMEAN+3*URMS/UINF (PERCENT)
0.00	52.5	13.5	92.9
22.50	44.6	10.8	76.9
45.00	38.9	9.1	66.1
67.50	35.3	10.8	67.6
90.00	39.4	10.3	70.3
112.50	28.1	8.8	54.6
135.00	17.4	5.0	32.5
157.50	28.8	10.8	61.3
180.00	29.7	8.1	54.0
202.50	34.7	11.4	68.8
225.00	32.9	8.0	56.9
247.50	29.9	7.8	53.4
270.00	28.0	7.6	50.7
292.50	25.0	7.1	46.3
315.00	21.9	6.1	40.2
337.50	42.3	16.1	90.5

LOCATION 4

WIND AZIMUTH	UMEAN/UINF (PERCENT)	URMS/UINF (PERCENT)	UMEAN+3*URMS/UINF (PERCENT)
0.00	33.4	13.3	73.3
22.50	50.2	11.6	85.0
45.00	54.4	9.8	83.7
67.50	59.9	11.5	94.4
90.00	54.6	12.8	93.1
112.50	44.0	14.9	88.8
135.00	27.3	10.9	59.9
157.50	36.7	10.0	66.7
180.00	52.4	11.4	86.7
202.50	69.2	12.1	105.6
225.00	79.8	11.3	113.7
247.50	71.0	11.8	106.4
270.00	51.3	15.0	96.4
292.50	33.6	11.2	67.1
315.00	22.4	5.6	39.3
337.50	34.3	14.4	77.3

TABLE 2--PEDESTRIAN WIND VELOCITIES AND TURBULENCE INTENSITIES

1221 BRICKELL BUILDING

LOCATION 5

WIND AZIMUTH	UMEAN/UINF (PERCENT)	URMS/UINF (PERCENT)	UMEAN+3*URMS/UINF (PERCENT)
0.00	41.1	13.9	82.6
22.50	42.9	11.8	78.3
45.00	44.8	11.9	80.5
67.50	44.6	12.6	82.4
90.00	49.9	12.1	86.3
112.50	40.3	9.8	69.6
135.00	24.4	7.7	47.3
157.50	23.1	7.8	46.6
180.00	30.6	8.4	55.8
202.50	33.1	9.0	60.2
225.00	40.4	8.9	67.1
247.50	39.9	8.7	66.1
270.00	38.3	10.6	70.2
292.50	30.9	10.0	60.7
315.00	22.8	6.7	43.0
337.50	35.6	13.1	74.9

LOCATION 6

WIND AZIMUTH	UMEAN/UINF (PERCENT)	URMS/UINF (PERCENT)	UMEAN+3*URMS/UINF (PERCENT)
0.00	27.9	10.0	57.9
22.50	36.0	10.0	66.0
45.00	31.5	9.5	60.0
67.50	36.6	9.7	65.5
90.00	49.1	7.7	72.2
112.50	47.3	7.3	69.0
135.00	36.9	9.4	65.2
157.50	28.4	9.4	56.7
180.00	30.0	10.6	61.7
202.50	40.7	13.4	81.0
225.00	33.8	8.9	60.6
247.50	39.9	8.7	65.9
270.00	43.5	9.2	71.1
292.50	43.5	10.9	76.3
315.00	30.2	10.9	62.8
337.50	37.5	13.7	78.5

LOCATION 7

WIND AZIMUTH	UMEAN/UINF (PERCENT)	URMS/UINF (PERCENT)	UMEAN+3*URMS/UINF (PERCENT)
0.00	34.7	12.2	71.2
22.50	27.9	8.8	54.3
45.00	35.9	11.0	68.9
67.50	37.6	12.3	74.6
90.00	41.4	14.6	85.2
112.50	45.6	9.8	75.1
135.00	43.4	9.2	71.1
157.50	40.8	10.2	71.5
180.00	41.9	11.2	75.5
202.50	57.3	14.2	99.9
225.00	27.5	9.4	55.7
247.50	35.1	9.9	64.8
270.00	46.2	10.5	77.7
292.50	51.8	11.4	86.1
315.00	40.9	11.5	75.6
337.50	55.0	14.5	98.4

LOCATION 8

WIND AZIMUTH	UMEAN/UINF (PERCENT)	URMS/UINF (PERCENT)	UMEAN+3*URMS/UINF (PERCENT)
0.00	29.6	12.7	67.7
22.50	34.0	16.0	82.0
45.00	32.4	13.9	74.2
67.50	27.3	10.3	58.2
90.00	39.6	17.1	90.8
112.50	39.1	11.0	72.0
135.00	46.7	10.8	79.2
157.50	47.5	12.3	84.5
180.00	46.3	11.3	80.1
202.50	54.9	21.2	118.5
225.00	25.4	8.1	49.7
247.50	28.3	8.2	53.0
270.00	30.7	7.4	52.9
292.50	39.6	10.7	71.8
315.00	29.3	11.1	62.5
337.50	38.8	14.4	82.0

TABLE 2--PEDESTRIAN WIND VELOCITIES AND TURBULENCE INTENSITIES

1221 BRICKELL BUILDING

LOCATION 9

WIND AZIMUTH	UMEAN/UINF (PERCENT)	URMS/UINF (PERCENT)	UMEAN+3*URMS/UINF (PERCENT)
0.00	44.1	14.5	87.7
22.50	47.1	14.5	90.5
45.00	50.5	16.2	99.2
67.50	42.0	17.7	95.0
90.00	37.5	13.7	78.7
112.50	32.2	10.1	62.4
135.00	43.7	16.9	94.3
157.50	42.3	18.1	96.6
180.00	48.7	13.6	89.6
202.50	43.8	14.4	87.0
225.00	34.4	7.7	57.5
247.50	27.4	7.0	48.2
270.00	25.8	8.8	52.2
292.50	27.1	10.2	57.6
315.00	28.7	11.6	63.5
337.50	49.7	13.5	90.4

LOCATION 10

WIND AZIMUTH	UMEAN/UINF (PERCENT)	URMS/UINF (PERCENT)	UMEAN+3*URMS/UINF (PERCENT)
0.00	37.9	17.3	89.9
22.50	64.2	14.1	106.7
45.00	57.5	15.4	103.5
67.50	49.1	16.2	97.8
90.00	35.2	8.7	61.3
112.50	45.8	12.4	83.0
135.00	51.0	20.5	112.6
157.50	44.2	19.1	101.3
180.00	43.2	14.2	85.9
202.50	37.8	10.3	68.9
225.00	45.2	10.5	76.7
247.50	44.1	7.6	66.9
270.00	44.7	9.2	72.1
292.50	31.1	12.6	68.8
315.00	56.1	18.1	110.5
337.50	54.9	12.9	93.6

LOCATION 11

WIND AZIMUTH	UMEAN/UINF (PERCENT)	URMS/UINF (PERCENT)	UMEAN+3*URMS/UINF (PERCENT)
0.00	56.1	17.2	107.7
22.50	59.3	13.0	98.2
45.00	46.1	11.8	81.4
67.50	42.5	11.7	77.5
90.00	44.4	10.9	77.0
112.50	47.2	10.3	78.0
135.00	58.9	12.2	95.4
157.50	62.7	17.8	116.2
180.00	33.3	11.1	66.7
202.50	44.9	11.2	78.4
225.00	57.6	10.7	89.8
247.50	58.0	9.6	86.9
270.00	59.1	11.5	93.4
292.50	51.4	14.0	93.6
315.00	33.9	12.4	71.0
337.50	32.8	12.6	70.7

LOCATION 12

WIND AZIMUTH	UMEAN/UINF (PERCENT)	URMS/UINF (PERCENT)	UMEAN+3*URMS/UINF (PERCENT)
0.00	31.6	9.8	60.9
22.50	22.0	7.3	44.0
45.00	26.3	8.2	50.9
67.50	22.8	8.6	48.5
90.00	35.3	8.1	59.4
112.50	50.7	12.2	87.4
135.00	65.2	14.0	107.3
157.50	60.3	15.0	105.3
180.00	31.2	10.8	63.6
202.50	36.5	11.7	71.5
225.00	42.4	14.6	86.3
247.50	35.9	13.6	76.8
270.00	29.5	12.0	65.4
292.50	26.8	11.1	60.2
315.00	36.6	13.8	78.2
337.50	43.5	14.9	88.1

TABLE 2--PEDESTRIAN WIND VELOCITIES AND TURBULENCE INTENSITIES

1221 BRICKELL BUILDING

LOCATION 13

WIND AZIMUTH	UMEAN/UINF (PERCENT)	URMS/UINF (PERCENT)	UMEAN+3*URMS/UINF (PERCENT)
0.00	47.4	13.7	88.5
22.50	48.8	14.2	91.3
45.00	32.3	11.3	66.1
67.50	30.8	9.5	59.3
90.00	46.3	10.0	76.2
112.50	45.4	9.0	72.4
135.00	41.7	10.9	74.3
157.50	50.9	15.1	96.2
180.00	26.9	8.1	51.2
202.50	27.2	9.5	55.7
225.00	40.7	14.5	84.3
247.50	51.3	15.7	98.4
270.00	53.9	14.3	96.7
292.50	37.1	15.3	83.0
315.00	30.8	10.5	62.2
337.50	37.2	13.1	76.5

LOCATION 14

WIND AZIMUTH	UMEAN/UINF (PERCENT)	URMS/UINF (PERCENT)	UMEAN+3*URMS/UINF (PERCENT)
0.00	68.7	12.2	105.3
22.50	46.8	9.4	74.9
45.00	41.0	9.8	70.4
67.50	32.6	10.4	63.8
90.00	39.6	13.7	80.8
112.50	52.1	14.1	94.3
135.00	58.4	12.4	95.7
157.50	52.4	11.1	85.8
180.00	44.7	13.1	84.0
202.50	45.7	17.8	99.2
225.00	39.2	16.5	88.6
247.50	26.3	7.7	49.4
270.00	31.2	10.5	62.8
292.50	23.1	6.8	43.5
315.00	42.3	14.7	86.3
337.50	76.7	13.9	118.5

LOCATION 15

WIND AZIMUTH	UMEAN/UINF (PERCENT)	URMS/UINF (PERCENT)	UMEAN+3*URMS/UINF (PERCENT)
0.00	43.6	11.3	77.4
22.50	38.4	11.8	73.9
45.00	26.5	7.6	49.2
67.50	24.0	7.7	47.2
90.00	24.6	7.3	46.5
112.50	39.8	11.6	74.6
135.00	49.9	12.2	86.4
157.50	48.2	14.2	90.9
180.00	39.3	12.9	78.1
202.50	50.8	14.6	94.8
225.00	44.2	14.1	86.6
247.50	34.4	10.1	64.7
270.00	35.7	12.4	72.8
292.50	25.4	8.2	50.0
315.00	31.6	10.4	62.7
337.50	38.4	12.1	74.7

LOCATION 16

WIND AZIMUTH	UMEAN/UINF (PERCENT)	URMS/UINF (PERCENT)	UMEAN+3*URMS/UINF (PERCENT)
0.00	69.0	16.1	117.4
22.50	59.4	12.5	96.9
45.00	49.1	12.8	87.5
67.50	43.9	13.5	84.3
90.00	29.5	10.1	59.8
112.50	31.9	13.0	70.8
135.00	34.7	11.8	70.1
157.50	47.7	12.6	85.6
180.00	59.0	14.3	102.0
202.50	77.5	13.9	119.2
225.00	75.6	14.7	119.6
247.50	58.4	20.1	118.9
270.00	30.8	11.3	64.7
292.50	22.5	7.3	44.3
315.00	23.8	9.5	52.3
337.50	60.6	25.9	138.4

TABLE 2--PEDESTRIAN WIND VELOCITIES AND TURBULENCE INTENSITIES

1221 BRICKELL BUILDING

LOCATION 17

WIND AZIMUTH	UMEAN/UINF (PERCENT)	URMS/UINF (PERCENT)	UMEAN+3*URMS/UINF (PERCENT)
0.00	63.8	15.1	109.1
22.50	45.8	10.0	75.9
45.00	41.2	9.0	68.4
67.50	40.2	9.9	70.0
90.00	25.9	8.6	51.5
112.50	33.0	12.6	70.7
135.00	32.2	9.8	61.7
157.50	36.2	9.1	63.6
180.00	44.5	9.9	74.1
202.50	58.2	12.9	96.7
225.00	60.0	13.9	101.7
247.50	54.3	14.0	96.2
270.00	41.4	13.3	81.3
292.50	29.9	10.2	60.5
315.00	32.8	12.3	69.7
337.50	65.7	16.2	114.3

LOCATION 18

WIND AZIMUTH	UMEAN/UINF (PERCENT)	URMS/UINF (PERCENT)	UMEAN+3*URMS/UINF (PERCENT)
0.00	24.8	8.4	50.1
22.50	23.5	6.5	43.0
45.00	28.3	8.3	53.3
67.50	29.2	8.4	54.3
90.00	49.0	8.5	74.5
112.50	45.2	7.4	67.3
135.00	37.7	8.1	62.1
157.50	29.1	8.7	55.4
180.00	18.7	5.7	35.7
202.50	26.5	9.0	53.5
225.00	24.5	8.2	49.1
247.50	32.2	11.0	65.1
270.00	46.3	10.6	78.1
292.50	29.7	10.5	61.4
315.00	30.8	10.7	62.8
337.50	42.4	13.8	83.8

TABLE 3

PERCENTAGE FREQUENCY OF WIND DIRECTION AND SPEED

MIAMI, FLORIDA INT. ARPRT (1965-1974)

SEASON : ANNUAL NO. OF OBS.= 29214 HT. OF MEAS.= 23. FT.

VELOCITY LEVELS IN MPH

DIRECTION	0- 3	4- 6	7-11	12-18	19-24	25-30	31 +	TOTAL
N	.90	3.20	2.50	1.00	.10	0.00	0.00	7.70
NNE	.30	1.10	.70	.40	.10	0.00	0.00	2.70
NE	.10	.50	1.10	1.30	.20	0.00	0.00	3.30
ENE	.10	1.00	2.30	2.70	.40	0.00	0.00	6.60
E	.50	3.90	7.10	5.80	.60	.10	0.00	18.00
ESE	.50	3.20	5.60	3.90	.30	0.00	0.00	13.60
SE	.50	2.10	3.50	2.10	.10	0.00	0.00	8.40
SSE	.50	1.60	2.10	1.20	0.00	0.00	0.00	5.50
S	.70	2.30	1.70	.90	.10	0.00	0.00	5.80
SSW	.50	1.40	.70	.30	0.00	0.00	0.00	2.80
SW	.40	1.00	.70	.20	.10	0.00	0.00	2.40
WSW	.40	1.10	.80	.40	.10	0.00	0.00	2.70
W	.60	1.60	.90	.40	.10	0.00	0.00	3.60
WNW	.70	1.30	1.00	.50	.10	0.00	0.00	3.50
NW	.80	1.90	1.40	.80	.20	0.00	0.00	5.20
NNW	.80	2.70	2.00	1.10	.20	0.00	0.00	6.80
CALM	1.40	0.00	0.00	0.00	0.00	0.00	0.00	1.40
TOT	9.80	30.10	34.10	23.00	2.80	.30	0.00	100.00

TABLE 4

SUMMARY OF WIND EFFECTS ON PEOPLE

	Beaufort number	Speed (mph)	Effects
Calm, light air	0, 1	0- 3	Calm, no noticeable wind
Light breeze	2	4- 7	Wind felt on face
Gentle breeze	3	8-12	Wind extends light flag Hair is disturbed Clothing flaps
Moderate breeze	4	13-18	Raises dust, dry soil and loose paper Hair disarranged
Fresh breeze	5	19-24	Force of wind felt on body Drifting snow becomes airborne Limit of agreeable wind on land
Strong breeze	6	25-31	Umbrellas used with difficulty Hair blown straight Difficult to walk steadily Wind noise on ears unpleasant Windborne snow above head height (blizzard)
Near gale	7	32-38	Inconvenience felt when walking
Gale	8	39-46	Generally impedes progress Great difficulty with balance in gusts
Strong gale	9	47-54	People blown over by gusts

Note: Table from Reference 4, p. 40.

TABLE 5

CALCULATION OF REFERENCE PRESSURE

1. Basic wind speed from ANSI A58.1 (Ref. 6):

   50-yr fastest mile at 30 ft = 110 mph

   Mean hourly wind speed = $\frac{110}{1.31}$ = 84.0 mph

   Mean hourly gradient wind speed = $84.0 \left(\frac{1000}{30}\right)^{.14}$ = 137 mph

   Mean hourly wind at wind tunnel velocity reference location at 1150 ft = U_∞ = gradient wind

   Reference pressure = $0.5 \ \rho U_\infty^2 = (0.00256)\ (137)^2$ = 48 psf

   Use <u>48 psf</u>

2. Loads for 100-yr recurrence wind:

   100-yr fastest mile at 30 ft = 125 mph (ref. 6):

   Multiply 50-yr load by $\left(\frac{125}{110}\right)^2$ = 1.29

3. Gust load factors to convert hourly mean integrated loads to various gust durations (see Sect. 4.4):

Gust Duration, sec	Gust Load Factor
10 - 15	$(1.4)^2$ = 1.96
30	$(1.32)^2$ = 1.74
45	$(1.26)^2$ = 1.59

The 30 second gust load factor was used in Table 7.

TABLE 6A. PEAK LOADS FOR CONFIGURATION A : 1221 BRICKELL BUILDING
LARGEST VALUES OF CLADDING LOAD REFERENCE PRESSURE = 48.0 PSF

TAP	AZI-MUTH	PRESS COEFF	ABSOLUTE PEAK ---- PSF	POSITIVE PEAK ----	TAP	AZI-MUTH	PRESS COEFF	ABSOLUTE PEAK ---- PSF	POSITIVE PEAK ----	TAP	AZI-MUTH	PRESS COEFF	ABSOLUTE PEAK ---- PSF	POSITIVE PEAK ----
101	300	2.05	98.5	42.5	149	100	2.61	125.5	24.0	223	200	1.80	86.6	48.0
102	300	1.82	87.6	35.5	150	110	1.36	65.1	20.2	224	20	1.52	72.9	49.7
103	290	1.51	72.3	37.7	151	150	1.40	67.1	14.7	225	0	3.76	180.7	36.6
104	300	2.22	106.5	46.9	152	230	1.24	59.7	18.9	226	10	2.37	113.6	42.9
105	300	2.24	107.7	46.6	153	290	1.43	68.8	30.5	227	10	1.44	69.2	51.0
106	290	1.75	84.2	40.0	154	280	1.38	66.1	39.3	228	10	1.35	64.7	57.0
107	300	1.49	71.7	54.8	155	280	1.32	63.5	37.9	229	200	1.71	82.3	44.3
108	90	1.99	95.4	40.3	156	140	1.76	84.3	15.4	230	200	3.67	176.3	44.5
109	90	2.30	110.6	42.9	157	110	1.63	78.5	16.7	231	0	2.52	121.1	38.2
110	290	1.49	71.6	47.5	158	240	1.53	73.6	14.5	232	90	2.29	109.7	42.5
111	90	1.90	91.4	49.1	159	230	1.30	62.6	27.2	233	150	1.65	79.0	42.5
112	90	1.96	94.1	51.1	160	240	1.12	53.7	34.9	234	20	1.51	72.3	42.3
113	100	1.57	75.1	48.5	161	240	1.60	76.7	35.4	235	190	2.62	126.0	37.5
114	290	1.41	67.5	50.0	162	230	1.34	64.2	32.0	236	10	1.84	88.3	35.2
115	300	1.57	75.2	49.4	163	270	1.43	68.9	29.6	237	10	1.48	70.8	44.6
116	300	1.70	81.5	48.3	164	290	1.64	78.6	32.7	238	50	1.53	73.4	49.3
117	280	2.08	100.1	46.7	165	290	1.77	85.0	45.3	239	150	1.99	95.6	48.1
118	280	1.84	88.5	49.3	166	340	1.13	54.0	26.4	240	200	1.62	77.6	37.4
119	100	1.66	79.6	45.4	167	340	1.42	68.4	49.8	241	70	2.18	104.6	28.7
120	290	1.68	80.9	52.5	168	150	1.29	61.9	23.8	242	150	1.53	73.3	43.2
121	300	1.89	90.9	51.3	169	150	1.36	65.1	43.4	243	150	1.56	74.9	43.8
122	300	1.79	85.8	49.3	170	100	2.13	102.5	22.9	244	200	1.23	58.8	38.4
123	110	1.54	74.0	51.6	171	100	3.10	148.8	22.7	245	200	2.16	103.8	38.2
124	110	1.63	78.2	49.6	172	290	2.07	99.2	43.2	246	350	1.74	83.4	23.6
125	270	1.47	70.7	50.9	173	290	1.76	84.6	45.8	247	320	1.45	69.4	33.3
126	100	1.55	74.3	47.6	174	290	1.88	90.3	42.3	248	160	1.74	83.7	43.6
127	100	1.82	87.1	41.6	201	0	2.64	126.9	43.5	249	320	1.35	64.8	44.6
128	110	1.58	76.1	43.3	202	10	2.00	96.0	44.4	250	200	1.54	73.7	41.2
129	300	1.48	71.1	45.4	203	20	1.25	60.0	43.2	251	200	1.49	71.5	39.3
130	290	1.71	81.9	50.0	204	190	1.19	57.1	40.5	252	350	1.66	79.9	18.1
131	300	1.95	93.8	46.2	205	200	1.91	91.6	43.2	253	350	1.62	77.5	31.0
132	280	1.48	70.9	54.0	206	200	2.40	115.0	46.9	254	10	1.32	63.4	39.5
133	290	1.39	66.8	46.2	207	10	1.79	85.8	49.9	255	200	1.18	56.8	53.4
134	300	1.57	75.2	46.4	208	10	1.98	95.2	50.1	256	100	1.58	75.7	44.0
135	300	1.79	85.8	44.2	209	10	1.40	67.2	49.2	257	100	1.47	70.8	39.9
136	290	1.72	82.6	40.9	210	190	1.49	71.5	50.1	258	10	2.36	113.4	20.1
137	290	1.93	92.8	45.5	211	210	1.85	88.8	49.0	259	10	2.64	126.5	26.2
138	290	2.66	127.7	42.2	212	200	1.90	91.2	48.6	260	170	1.19	57.1	40.3
139	290	2.41	115.9	41.1	213	190	1.76	84.5	46.7	261	130	1.12	53.9	38.0
140	90	1.42	68.1	40.4	214	0	1.57	75.3	47.3	262	110	1.69	81.2	38.0
141	80	1.42	68.4	36.1	215	0	1.57	75.3	51.7	263	110	1.46	70.3	31.8
142	90	1.51	72.4	32.4	216	190	1.56	74.7	53.3	264	160	2.27	108.9	19.5
143	100	1.67	80.0	33.2	217	210	1.41	67.6	46.7	265	160	1.77	85.0	20.9
144	280	1.32	63.4	38.5	218	20	1.92	92.1	43.9	266	90	1.33	64.0	37.3
145	290	1.50	71.8	45.1	219	190	1.85	88.8	39.2	267	140	1.35	64.7	46.9
146	280	1.65	79.1	51.4	220	10	1.65	79.0	45.0	268	130	1.57	75.4	31.1
147	280	1.41	67.9	43.2	221	20	1.73	83.1	43.3	269	50	1.67	80.1	24.7
148	100	2.11	101.2	30.2	222	200	1.80	86.2	50.0	270	10	2.89	138.7	42.1

TABLE 6A. PEAK LOADS FOR CONFIGURATION A : 1221 BRICKELL BUILDING
LARGEST VALUES OF CLADDING LOAD REFERENCE PRESSURE = 48.0 PSF

TAP	AZI-MUTH	PRESS COEFF	ABSOLUTE PEAK (PSF)	POSITIVE PEAK (PSF)	TAP	AZI-MUTH	PRESS COEFF	ABSOLUTE PEAK (PSF)	POSITIVE PEAK (PSF)	TAP	AZI-MUTH	PRESS COEFF	ABSOLUTE PEAK (PSF)	POSITIVE PEAK (PSF)
271	0	2.76	132.7	40.3	334	280	2.14	102.6	44.7	408	190	2.19	105.0	14.1
272	200	2.40	115.3	43.8	335	300	2.31	111.0	47.4	409	190	1.29	62.0	14.8
273	200	2.53	121.6	44.3	336	290	2.26	108.7	47.4	410	200	1.40	67.3	8.5
274	0	3.22	154.3	41.9	337	310	3.28	157.4	46.6	411	30	1.49	71.4	11.1
275	10	2.48	118.8	42.4	338	300	2.35	113.0	47.4	412	20	2.06	98.8	15.3
276	20	1.82	87.5	45.5	339	300	3.22	154.5	41.7	413	290	1.34	64.3	20.7
277	170	2.08	99.7	45.7	340	320	2.11	101.4	40.1	414	190	1.29	62.0	16.3
278	200	2.11	101.1	44.9	341	320	2.50	119.8	41.2	415	20	1.38	66.3	13.5
279	200	3.22	154.7	44.9	342	310	1.72	82.7	36.3	416	20	1.36	65.4	16.7
280	10	1.75	84.1	52.9	343	310	1.21	58.2	34.0	417	20	1.30	62.2	22.9
281	170	1.75	84.2	66.3	344	60	1.45	69.6	33.0	418	170	2.18	104.6	29.0
282	20	3.09	148.5	46.1	345	100	1.78	85.7	38.1	419	290	1.42	68.1	25.2
283	0	1.63	78.4	42.9	346	110	1.68	80.5	40.7	420	20	1.45	69.6	21.5
284	30	1.52	72.7	40.9	347	100	1.51	72.4	45.2	421	20	1.64	78.8	25.0
285	180	2.65	127.2	39.0	348	290	1.44	69.2	33.9	422	40	2.20	105.5	30.9
301	270	2.60	124.7	36.8	349	290	1.48	71.1	32.3	423	160	2.25	107.8	44.6
302	270	1.80	86.5	40.0	350	280	1.34	64.1	27.8	424	170	1.43	68.4	42.7
303	280	1.84	88.1	50.2	351	290	1.02	49.2	20.7	425	190	1.52	72.8	39.3
304	280	2.11	101.3	47.8	352	70	1.10	52.6	26.0	426	20	1.51	72.5	40.0
305	270	1.63	78.0	31.6	353	100	1.53	73.3	31.6	427	30	2.06	98.8	48.1
306	270	1.43	68.8	48.5	354	110	2.37	113.6	35.9	428	30	1.77	84.9	53.5
307	110	1.67	80.1	36.9	355	110	1.98	95.3	33.8	429	10	1.87	89.9	50.3
308	290	1.78	85.4	47.3	356	70	1.57	75.3	29.3	430	170	1.59	76.2	46.7
309	110	2.19	105.1	37.8	357	120	1.73	83.2	29.1	431	200	1.49	71.8	47.1
310	120	2.40	115.1	43.6	358	70	1.71	82.1	23.7	432	20	1.42	68.0	48.1
311	90	1.49	71.6	46.1	359	90	1.21	58.2	29.3	433	190	1.58	75.7	46.5
312	260	1.28	61.5	47.6	360	290	2.13	102.2	28.3	434	190	1.77	84.9	47.5
313	100	1.69	81.0	47.4	361	320	2.01	96.3	23.2	435	10	1.80	86.5	44.3
314	290	1.50	72.1	48.9	362	290	1.36	65.2	27.8	436	20	1.83	88.0	44.0
315	120	1.97	94.3	47.6	363	340	1.20	57.8	31.8	437	200	1.52	72.8	46.3
316	120	1.89	90.9	47.6	364	340	1.37	65.8	40.5	438	20	1.86	89.5	48.1
317	100	1.83	87.8	45.9	365	100	1.18	56.7	29.3	439	30	1.60	76.6	46.8
318	290	1.80	86.5	45.7	366	230	1.25	60.1	26.9	440	200	1.83	87.7	48.0
319	300	1.89	90.9	48.6	367	80	1.01	48.6	31.4	441	20	1.68	80.7	39.8
320	290	1.48	71.2	48.0	368	80	.97	46.5	43.9	442	190	1.94	93.0	44.4
321	280	1.76	84.3	48.2	369	240	1.25	60.1	44.8	443	190	1.63	78.3	45.6
322	290	1.98	95.1	45.4	370	100	2.49	119.4	32.8	444	10	2.10	100.8	47.9
323	280	1.97	94.4	48.0	371	110	2.86	137.2	31.6	445	10	1.84	88.3	41.8
324	280	2.05	98.3	45.9	372	310	2.60	124.6	45.0	446	300	1.94	93.3	38.3
325	290	2.49	119.7	48.6	373	300	2.49	119.4	40.2	447	0	1.50	72.0	40.4
326	290	2.06	99.0	45.8	374	310	2.37	113.7	43.2	448	180	1.72	82.5	37.4
327	270	1.54	74.0	49.6	401	190	1.76	84.5	8.6	449	200	1.91	91.6	43.2
328	120	1.50	72.0	43.0	402	220	1.24	59.5	4.6	450	30	1.65	79.0	40.7
329	110	1.63	78.2	43.3	403	220	1.43	68.5	7.3	451	10	1.57	75.5	41.4
330	110	1.43	68.4	43.9	404	20	1.20	57.8	2.5	452	210	1.61	77.2	35.9
331	290	2.44	117.0	41.8	405	20	1.72	82.3	5.7	453	200	2.47	118.4	15.2
332	320	1.90	91.3	53.0	406	190	2.32	111.3	14.7	454	210	1.73	83.2	7.8
333	310	2.10	100.8	42.8	407	40	3.14	150.8	10.5	455	240	1.58	75.7	10.4

TABLE 6A. PEAK LOADS FOR CONFIGURATION A : 1221 BRICKELL BUILDING
LARGEST VALUES OF CLADDING LOAD REFERENCE PRESSURE = 48.0 PSF

TAP	AZI-MUTH	PRESS COEFF	ABSOLUTE PEAK (PSF)	POSITIVE PEAK (PSF)	TAP	AZI-MUTH	PRESS COEFF	ABSOLUTE PEAK (PSF)	POSITIVE PEAK (PSF)	TAP	AZI-MUTH	PRESS COEFF	ABSOLUTE PEAK (PSF)	POSITIVE PEAK (PSF)
456	340	1.53	73.3	8.7	468	220	1.43	68.5	29.0	508	340	1.06	50.7	11.2
457	0	1.63	78.2	10.9	469	230	1.37	65.8	32.5	509	230	1.17	56.1	5.0
458	330	3.10	148.8	12.3	470	340	1.35	64.7	36.4	510	340	.92	44.2	3.7
459	220	1.57	75.5	12.2	471	340	1.33	63.9	28.2	9124	110	1.76	84.6	48.6
460	340	1.65	79.2	13.9	472	160	1.12	53.9	42.0	9140	90	1.55	74.3	44.6
461	220	1.43	68.4	8.6	501	200	1.95	93.4	51.0	9213	0	1.42	68.0	54.1
462	340	1.10	52.8	12.4	502	20	1.45	69.4	62.4	9218	20	1.42	68.3	50.9
463	220	1.34	64.4	22.6	503	10	2.20	105.4	54.5	9317	90	1.89	90.7	46.6
464	330	1.12	53.6	17.1	504	230	1.46	69.9	14.8	9322	290	1.69	81.2	46.3
465	60	.92	44.1	36.3	505	340	1.25	59.9	17.7	9348	290	1.48	71.1	36.6
466	340	1.35	65.0	39.6	506	220	.98	47.2	7.7	9355	110	1.99	95.5	28.6
467	210	.95	45.7	45.7	507	240	1.08	51.8	5.1					

TABLE 6A. PEAK LOADS FOR CONFIGURATION A : 1221 BRICKELL BUILDING
LARGEST VALUES OF CLADDING LOAD REFERENCE PRESSURE = 48.0 PSF

* * 15 GREATEST PRESSURE COEFFICIENTS * *

TAP	AZI-MUTH	PRESS COEFF	ABSOLUTE PEAK ---- PSF	POSITIVE PEAK ----
225	0	3.76	180.7	36.6
230	200	3.67	176.3	44.5
337	310	3.28	157.4	46.6
279	200	3.22	154.7	44.9
339	300	3.22	154.5	41.7
274	0	3.22	154.3	41 9
407	40	3.14	150.8	10.5
458	330	3.10	148.8	12.3
171	100	3.10	148.8	22.7
282	20	3.09	148.5	46.1
270	10	2.89	138.7	42.1
371	110	2 86	137.2	31.6
271	0	2.76	132.7	40.3
138	290	2.66	127.7	42.2
285	180	2.65	127.2	39.0

TABLE 6A. PEAK LOADS FOR CONFIGURATION B : 1221 BRICKELL BUILDING
LARGEST VALUES OF CLADDING LOAD REFERENCE PRESSURE = 48.0 PSF

TAP	AZI-MUTH	PRESS COEFF	ABSOLUTE PEAK ---- PSF ----	POSITIVE PEAK ---- PSF ----	TAP	AZI-MUTH	PRESS COEFF	ABSOLUTE PEAK ---- PSF ----	POSITIVE PEAK ---- PSF ----	TAP	AZI-MUTH	PRESS COEFF	ABSOLUTE PEAK ---- PSF ----	POSITIVE PEAK ---- PSF ----
138	296	2.67	128.1	48.6	273	198	3.17	152.1	28.8	371	112	2.48	119.0	20.0
139	296	3.10	148.7	43.9	274	4	3.56	170.9	37.1	372	308	3.76	180.5	40.1
149	102	2.84	136.1	25.6	279	204	3.85	184.8	31.4	373	308	3.42	163.9	44.3
170	110	2.50	119.9	30.3	282	20	2.98	142.8	45.7	406	186	2.24	107.3	7.3
171	114	3.03	145.2	31.4	285	180	2.80	134.4	35.5	407	24	2.57	123.6	9.7
201	12	2.64	126.8	50.2	337	300	3.07	147.5	34.2	408	196	1.74	83.5	11.2
206	196	2.88	138.4	32.1	339	296	3.66	175.9	39.6	412	30	2.16	103.6	11.9
225	14	3.83	183.7	40.9	354	100	2.34	112.3	27.5	453	202	2.85	136.8	5.4
230	198	3.89	186.6	22.4	370	112	3.08	148.0	24.1	458	14	2.36	113.1	10.3
270	12	2.74	131.4	36.6										

TABLE 6A. PEAK LOADS FOR CONFIGURATION B : 1221 BRICKELL BUILDING
LARGEST VALUES OF CLADDING LOAD REFERENCE PRESSURE = 48.0 PSF

* * 15 GREATEST PRESSURE COEFFICIENTS * *

TAP	AZI-MUTH	PRESS COEFF	ABSOLUTE PEAK ---- PSF	POSITIVE PEAK ----
230	198	3.89	186.6	22.4
279	204	3.85	184.8	31.4
225	14	3.83	183.7	40.9
372	308	3.76	180.5	40.1
339	296	3.66	175.9	39.6
274	4	3.56	170.9	37 1
373	308	3.42	163.9	44.3
273	198	3.17	152.1	28.8
139	296	3.10	148.7	43.9
370	112	3.08	148.0	24.1
337	300	3.07	147.5	34.2
171	114	3.03	145.2	31.4
282	20	2.98	142.8	45.7
206	196	2.88	138.4	32.1
453	202	2.85	136.8	5.4

TABLE 6B. COMPARISON OF CONFIGURATIONS A AND B : 1221 BRICKELL BUILDING
TAPS WHERE ABSOLUTE PEAK LOAD FOR CONFIG. B EXCEEDED THAT FOR CONFIG. A BY 5 PSF
REF. PRESSURE = 48.0 PSF

TAP	AZIMUTH	A CONFIG. PSF LOAD	AZIMUTH	B CONFIG. PSF LOAD
139	290	115.9	296	148.7
149	100	125.5	102	136.1
170	100	102.5	110	119.9
206	200	115.0	196	138.4
230	200	176.3	198	186.6
273	200	121.6	198	152.1
274	0	154.3	4	170.9
279	200	154.7	204	184.8
285	180	127.2	180	134.4
339	300	154.5	296	175.9
370	100	119.4	112	148.0
372	310	124.6	308	180.5
373	300	119.4	308	163.9
453	200	118.4	202	136.8

TABLE 7. BASE SHEAR AND MOMENT SUMMARY : 1221 BRICKELL BUILDING
CONFIGURATION A REFERENCE PRESSURE 48.0 GUST FACTOR 1.32

AZIMUTH DEGREES	X-SHEAR KIPS	Y-SHEAR KIPS	X-MOMENT	Y-MOMENT 1000-FT-KIPS	Z-MOMENT
0	-1456.2	-38.1	-6.2	-275.4	30.3
10	-1265.2	62.3	-24.4	-252.1	20.8
20	-1181.9	-22.1	12.4	-234.4	8.9
30	-1045.3	163.7	-26.0	-193.0	7.6
40	-1401.2	425.7	-90.3	-246.5	12.7
50	-1480.9	655.7	-143.9	-250.2	17.0
60	-1480.8	944.2	-208.1	-246.0	18.9
70	-1317.6	1164.0	-256.6	-209.6	20.4
80	-828.4	1399.8	-286.1	-118.8	20.4
90	-330.6	1399.8	-283.5	-27.5	17.3
100	-43.0	1372.7	-281.0	8.5	6.5
110	89.8	1328.3	-272.7	-2.0	-9.0
120	346.2	1314.0	-264.5	31.9	-19.3
130	790.1	1300.8	-258.0	112.1	-22.9
140	1243.8	1215.9	-248.6	197.9	-23.3
150	1521.0	970.5	-211.5	253.2	-21.5
160	1602.9	729.5	-154.5	272.5	-19.6
170	1540.9	513.3	-91.7	269.9	-12.6
180	1290.3	-115.9	27.6	244.0	-7.0
190	1327.6	-176.0	26.1	255.4	-15.8
200	1658.9	-140.4	-5.2	305.4	-29.4
210	1709.0	-511.6	71.6	305.0	-35.4
220	1709.7	-900.3	164.2	296.5	-34.7
230	1576.3	-1236.7	242.8	269.5	-31.7
240	1359.9	-1409.8	287.9	223.6	-26.8
250	983.0	-1546.8	319.2	153.0	-16.6
260	505.2	-1659.5	344.1	57.4	-4.4
270	149.6	-1684.1	360.8	-20.0	1.0
280	74.0	-1691.1	370.6	-20.6	-1.1
290	66.4	-1567.2	354.5	7.4	-.8
300	-256.3	-1184.7	292.1	-37.6	2.7
310	-702.0	-1077.4	273.9	-127.3	10.2
320	-1212.4	-1035.6	256.7	-218.5	23.1
330	-1612.5	-937.4	215.9	-277.4	35.6
340	-1517.3	-793.8	167.1	-271.2	30.7
350	-1386.0	-466.3	91.3	-257.5	27.1

TABLE 7. SHEAR AND MOMENT DIAGRAMS : 1221 BRICKELL BUILDING

WIND DIRECTION 0 CONFIGURATION A REFERENCE PRESSURE 48.0 PSF GUST FACTOR 1.32

FLOOR	HEIGHT FT	X-FORCE KIPS	Y-FORCE KIPS	X-AREA SQ FT	Y-AREA SQ FT	X-PRESS PSF	Y-PRESS PSF	X-SHEAR KIPS	Y-SHEAR KIPS	X-MOMENT	Y-MOMENT 1000-FT-KIPS	Z-MOMENT
1ST	0.00	-45.8	-3.1	1598	1033	-28.7	-3.0	-1456.2	-38.1	-6.2	-275.4	30.3
2ND	12.92	-31.5	-1.2	1320	853	-23.9	-1.4	-1410.4	-35.0	-6.7	-256.9	28.7
3RD	23.58	-31.2	.3	1391	853	-22.4	.4	-1378.9	-33.8	-7.1	-242.0	27.5
4TH	34.25	-32.1	-.5	1461	853	-22.0	-.6	-1347.7	-34.1	-7.4	-227.4	26.3
5TH	44.92	-31.8	-5.0	1461	853	-21.8	-5.9	-1315.6	-33.6	-7.8	-213.2	25.2
6TH	55.58	-31.7	-5.5	1461	853	-21.7	-6.4	-1283.8	-28.6	-8.1	-199.4	24.2
7TH	66.25	-33.8	-6.5	1461	853	-23.1	-7.6	-1252.1	-23.1	-8.4	-185.9	23.3
8TH	76.92	-37.6	-7.5	1461	853	-25.7	-8.8	-1218.3	-16.6	-8.6	-172.7	22.2
9TH	87.59	-41.4	-8.5	1461	853	-28.3	-10.0	-1180.7	-9.1	-8.7	-159.9	21.0
10TH	98.25	-45.2	-9.6	1461	853	-30.9	-11.2	-1139.4	-.6	-8.8	-147.5	19.7
11TH	108.92	-48.9	-10.2	1461	853	-33.5	-12.0	-1094.2	9.0	-8.7	-135.6	18.3
12TH	119.59	-52.7	-9.1	1461	853	-36.1	-10.6	-1045.3	19.3	-8.6	-124.2	16.7
14TH	130.25	-54.8	-8.5	1461	853	-37.5	-9.9	-992.5	28.4	-8.3	-113.3	15.1
15TH	140.92	-54.9	-8.8	1396	853	-39.3	-10.4	-937.7	36.8	-8.0	-103.0	13.3
16TH	151.59	-51.0	-7.8	1264	853	-40.4	-9.1	-882.8	45.7	-7.6	-93.3	11.7
17TH	162.26	-48.4	-6.4	1131	853	-42.8	-7.5	-831.8	53.4	-7.0	-84.2	10.4
18TH	172.92	-42.7	-3.7	999	853	-42.8	-4.4	-783.4	59.9	-6.4	-75.6	9.3
19TH	183.59	-38.1	-.9	853	853	-44.7	-1.0	-740.6	63.6	-5.8	-67.4	8.6
20TH	194.26	-40.1	.7	853	853	-47.0	.8	-702.5	64.4	-5.1	-59.7	8.2
21ST	204.92	-41.4	2.1	853	853	-48.5	2.4	-662.4	63.7	-4.4	-52.4	7.8
22ND	215.59	-42.6	3.1	853	853	-49.9	3.6	-621.0	61.6	-3.7	-45.6	7.4
23RD	226.26	-43.9	4.1	853	853	-51.4	4.8	-578.4	58.5	-3.1	-39.2	7.0
24TH	236.92	-45.1	5.2	853	853	-52.9	6.0	-534.5	54.4	-2.5	-33.3	6.7
25TH	247.59	-46.3	5.8	853	853	-54.2	6.8	-489.4	49.3	-1.9	-27.8	6.3
26TH	258.26	-46.6	6.1	853	853	-54.6	7.1	-443.1	43.4	-1.4	-22.8	5.9
27TH	268.92	-46.9	6.3	853	853	-55.0	7.4	-396.5	37.4	-1.0	-18.4	5.6
28TH	279.59	-47.3	6.6	853	853	-55.4	7.7	-349.6	31.1	-.6	-14.4	5.2
29TH	290.26	-47.6	6.8	853	853	-55.8	8.0	-302.3	24.5	-.3	-10.9	4.8
30TH	300.93	-48.0	7.1	853	853	-56.2	8.3	-254.7	17.7	-.1	-7.9	4.4
31ST	311.59	-48.3	6.3	853	853	-56.6	7.4	-206.8	10.6	.0	-5.5	4.0
32ND	322.26	-46.6	5.3	853	853	-54.6	6.2	-158.5	4.3	.1	-3.5	3.6
33RD	332.93	-40.0	2.4	767	853	-52.1	2.8	-111.9	-1.0	.1	-2.1	3.2
34TH	343.59	-31.5	.7	592	853	-53.1	.9	-71.9	-3.4	.1	-1.1	2.6
35TH	354.26	-38.0	-3.0	678	1820	-56.0	-1.7	-40.4	-4.1	.1	-.5	1.9
PARA	377.01	-2.4	-1.1	49	639	-49.8	-1.7	-2.4	-1.1	.0	-.0	.3

TABLE 7. SHEAR AND MOMENT DIAGRAMS : 1221 BRICKELL BUILDING
WIND DIRECTION 10 CONFIGURATION A REFERENCE PRESSURE 48.0 PSF GUST FACTOR 1.32

FLOOR	HEIGHT FT	X-FORCE KIPS	Y-FORCE KIPS	X-AREA SQ FT	Y-AREA SQ FT	X-PRESS PSF	Y-PRESS PSF	X-SHEAR KIPS	Y-SHEAR KIPS	X-MOMENT 1000-FT-KIPS	Y-MOMENT 1000-FT-KIPS	Z-MOMENT 1000-FT-KIPS
1ST	0.00	-38.2	-.7	1598	1033	-23.9	-.6	-1265.2	62.3	-24.4	-252.1	20.8
2ND	12.92	-27.2	1.0	1320	853	-20.6	1.2	-1227.0	63.0	-23.6	-236.0	19.5
3RD	23.58	-26.1	2.3	1391	853	-18.7	2.7	-1199.9	62.0	-22.9	-223.1	18.5
4TH	34.25	-25.4	3.0	1461	853	-17.4	3.5	-1173.8	59.7	-22.2	-210.4	17.6
5TH	44.92	-23.7	.5	1461	853	-16.2	.6	-1148.4	56.7	-21.6	-198.0	16.8
6TH	55.58	-22.3	-.6	1461	853	-15.3	-.7	-1124.8	56.2	-21.0	-185.9	16.1
7TH	66.25	-24.0	-1.8	1461	853	-16.4	-2.1	-1102.5	56.8	-20.4	-174.0	15.5
8TH	76.92	-27.3	-3.1	1461	853	-18.7	-3.7	-1078.5	58.6	-19.8	-162.4	14.8
9TH	87.59	-30.7	-4.4	1461	853	-21.0	-5.2	-1051.2	61.8	-19.2	-151.0	14.0
10TH	98.25	-34.1	-5.7	1461	853	-23.3	-6.7	-1020.5	66.2	-18.5	-140.0	13.2
11TH	108.92	-37.4	-6.7	1461	853	-25.6	-7.9	-986.4	71.9	-17.7	-129.3	12.2
12TH	119.59	-40.8	-6.3	1461	853	-27.9	-7.4	-949.0	78.7	-16.9	-118.9	11.1
14TH	130.25	-42.6	-7.0	1461	853	-29.1	-8.2	-908.2	85.0	-16.1	-109.0	9.9
15TH	140.92	-42.9	-6.2	1396	853	-30.7	-7.2	-865.7	92.0	-15.1	-99.6	8.7
16TH	151.59	-40.9	-5.5	1264	853	-32.4	-6.4	-822.8	98.2	-14.1	-90.6	7.5
17TH	162.26	-40.0	-3.6	1131	853	-35.3	-4.3	-781.9	103.7	-13.0	-82.0	6.6
18TH	172.92	-36.8	-.0	999	853	-36.8	-.0	-741.9	107.3	-11.9	-73.9	5.8
19TH	183.59	-33.6	2.7	853	853	-39.3	3.1	-705.1	107.3	-10.8	-66.2	5.3
20TH	194.26	-34.9	4.6	853	853	-40.9	5.4	-671.6	104.6	-9.6	-58.8	5.0
21ST	204.92	-36.4	5.2	853	853	-42.6	6.1	-636.7	100.0	-8.5	-51.8	4.8
22ND	215.59	-37.9	5.5	853	853	-44.4	6.4	-600.3	94.9	-7.5	-45.3	4.6
23RD	226.26	-39.4	5.7	853	853	-46.1	6.7	-562.5	89.4	-6.5	-39.0	4.4
24TH	236.92	-40.8	6.0	853	853	-47.9	7.1	-523.1	83.6	-5.6	-33.3	4.2
25TH	247.59	-42.3	6.3	853	853	-49.6	7.4	-482.3	77.6	-4.7	-27.9	4.0
26TH	258.26	-43.5	6.5	853	853	-51.0	7.7	-440.0	71.3	-3.9	-23.0	3.8
27TH	268.92	-44.7	6.8	853	853	-52.4	8.0	-396.5	64.8	-3.2	-18.5	3.6
28TH	279.59	-45.9	7.1	853	853	-53.8	8.3	-351.8	58.0	-2.6	-14.5	3.4
29TH	290.26	-47.1	7.3	853	853	-55.2	8.6	-305.9	50.9	-2.0	-11.0	3.3
30TH	300.93	-48.3	7.6	853	853	-56.6	8.9	-258.8	43.6	-1.5	-8.0	3.1
31ST	311.59	-49.5	7.6	853	853	-58.0	8.9	-210.6	36.0	-1.0	-5.5	3.0
32ND	322.26	-48.4	7.5	853	853	-56.7	8.8	-161.1	28.4	-.7	-3.5	2.8
33RD	332.93	-41.4	6.2	767	853	-54.0	7.3	-112.7	20.9	-.4	-2.1	2.5
34TH	343.59	-31.6	5.4	592	853	-53.4	6.3	-71.3	14.7	-.2	-1.1	2.1
35TH	354.26	-37.5	8.5	678	1820	-55.3	4.7	-39.7	9.3	-.1	-.5	1.5
PARA	377.01	-2.3	.8	49	639	-46.0	1.3	-2.3	.8	-.0	-.0	.2

TABLE 7. SHEAR AND MOMENT DIAGRAMS : 1221 BRICKELL BUILDING
WIND DIRECTION 20 CONFIGURATION A REFERENCE PRESSURE 48.0 PSF GUST FACTOR 1.32

FLOOR	HEIGHT FT	X-FORCE KIPS	Y-FORCE KIPS	X-AREA SQ FT	Y-AREA SQ FT	X-PRESS PSF	Y-PRESS PSF	X-SHEAR KIPS	Y-SHEAR KIPS	X-MOMENT	Y-MOMENT	Z-MOMENT
										1000-FT-KIPS		
1ST	0.00	-38.1	4.9	1598	1033	-23.8	4.8	-1181.9	-22.1	12.4	-234.4	8.9
2ND	12.92	-28.5	4.2	1329	853	-21.6	4.9	-1143.8	-27.0	12.1	-219.4	7.8
3RD	23.58	-27.5	4.4	1391	853	-19.8	5.2	-1115.3	-31.2	11.8	-207.3	7.0
4TH	34.25	-26.3	6.6	1461	853	-18.0	7.8	-1087.8	-35.6	11.4	-195.6	6.4
5TH	44.92	-23.8	5.9	1461	853	-16.3	7.0	-1061.5	-42.3	11.0	-184.1	5.9
6TH	55.58	-21.6	4.3	1461	853	-14.8	5.0	-1037.7	-48.2	10.5	-172.9	5.5
7TH	66.25	-22.6	2.5	1461	853	-15.5	3.0	-1016.0	-52.5	10.0	-161.9	5.3
8TH	76.92	-25.2	.7	1461	853	-17.2	.9	-993.4	-55.1	9.4	-151.2	5.1
9TH	87.59	-27.7	-1.0	1461	853	-19.0	-1.2	-968.3	-55.8	8.8	-140.8	4.8
10TH	98.25	-30.3	-2.8	1461	853	-20.7	-3.3	-940.6	-54.8	8.2	-130.6	4.4
11TH	108.92	-32.8	-4.4	1461	853	-22.5	-5.2	-910.3	-51.9	7.7	-120.7	3.9
12TH	119.59	-35.4	-4.8	1461	853	-24.2	-5.7	-877.5	-47.5	7.1	-111.2	3.3
14TH	130.25	-37.9	-4.4	1461	853	-25.9	-5.2	-842.1	-42.7	6.6	-102.0	2.6
15TH	140.92	-38.5	-5.2	1396	853	-27.6	-6.1	-804.2	-38.2	6.2	-93.2	1.9
16TH	151.59	-37.2	-3.9	1264	853	-29.5	-4.6	-765.7	-33.1	5.8	-84.9	1.1
17TH	162.26	-36.9	-1.5	1131	853	-32.6	-1.8	-728.4	-29.2	5.5	-76.9	.4
18TH	172.92	-34.6	2.3	999	853	-34.6	2.7	-691.6	-27.7	5.2	-69.3	-.0
19TH	183.59	-31.4	1.0	853	853	-36.8	1.2	-657.0	-29.9	4.9	-62.1	-.3
20TH	194.26	-32.0	1.6	853	853	-37.5	1.9	-625.6	-30.9	4.6	-55.3	-.3
21ST	204.92	-33.4	1.5	853	853	-39.1	1.8	-593.6	-32.6	4.2	-48.8	-.2
22ND	215.59	-34.7	1.0	853	853	-40.7	1.2	-560.2	-34.1	3.9	-42.6	-.2
23RD	226.26	-36.0	.5	853	853	-42.2	.6	-525.5	-35.1	3.5	-36.8	-.1
24TH	236.92	-37.4	-.0	853	853	-43.8	-.0	-489.5	-35.6	3.1	-31.4	-.0
25TH	247.59	-38.7	-.7	853	853	-45.3	-.8	-452.1	-35.5	2.7	-26.4	.0
26TH	258.26	-40.0	-1.3	853	853	-46.9	-1.5	-413.4	-34.9	2.4	-21.8	.1
27TH	268.92	-41.3	-1.9	853	853	-48.4	-2.3	-373.4	-33.6	2.0	-17.6	.2
28TH	279.59	-42.6	-2.6	853	853	-50.0	-3.0	-332.1	-31.7	1.7	-13.8	.3
29TH	290.26	-43.9	-3.2	853	853	-51.5	-3.8	-289.5	-29.1	1.3	-10.5	.4
30TH	300.93	-45.3	-3.9	853	853	-53.0	-4.5	-245.5	-25.9	1.0	-7.6	.5
31ST	311.59	-46.6	-3.7	853	853	-54.6	-4.4	-200.3	-22.0	.8	-5.3	.6
32ND	322.26	-45.8	-1.8	853	853	-53.7	-2.1	-153.7	-18.3	.6	-3.4	.7
33RD	332.93	-39.3	-3.9	767	853	-51.2	-4.6	-107.9	-16.5	.4	-2.0	.8
34TH	343.59	-30.0	-4.0	592	853	-50.6	-4.7	-68.6	-12.6	.2	-1.0	.8
35TH	354.26	-36.5	-7.6	678	1820	-53.8	-4.2	-38.6	-8.6	.1	-.5	.5
PARA	377.01	-2.2	-.9	49	639	-44.5	-1.5	-2.2	-.9	.0	-.0	-.0

TABLE 7. SHEAR AND MOMENT DIAGRAMS : 1221 BRICKELL BUILDING
WIND DIRECTION 30 CONFIGURATION A REFERENCE PRESSURE 48.0 PSF GUST FACTOR 1.32

FLOOR	HEIGHT FT	X-FORCE KIPS	Y-FORCE KIPS	X-AREA SQ FT	Y-AREA SQ FT	X-PRESS PSF	Y-PRESS PSF	X-SHEAR KIPS	Y-SHEAR KIPS	X-MOMENT	Y-MOMENT	Z-MOMENT
										1000-FT-KIPS		
1ST	0.00	-37.5	5.5	1598	1033	-23.5	5.3	-1045.3	163.7	-26.0	-193.0	7.6
2ND	12.92	-28.5	4.9	1320	853	-21.6	5.8	-1007.8	158.2	-23.9	-179.8	6.4
3RD	23.58	-28.4	4.7	1391	853	-20.4	5.5	-979.3	153.3	-22.2	-169.2	5.5
4TH	34.25	-28.2	7.1	1461	853	-19.3	8.3	-950.9	148.5	-20.6	-158.9	4.8
5TH	44.92	-27.2	7.0	1461	853	-18.6	8.3	-922.8	141.5	-19.1	-148.9	4.2
6TH	55.58	-26.3	6.6	1461	853	-18.0	7.8	-895.5	134.4	-17.6	-139.2	3.7
7TH	66.25	-26.6	6.1	1461	853	-18.2	7.1	-869.3	127.8	-16.2	-129.8	3.3
8TH	76.92	-28.3	5.5	1461	853	-19.4	6.4	-842.7	121.7	-14.9	-120.6	2.9
9TH	87.59	-30.1	4.9	1461	853	-20.6	5.7	-814.4	116.2	-13.6	-111.8	2.4
10TH	98.25	-31.9	4.3	1461	853	-21.8	5.0	-784.3	111.3	-12.4	-103.3	1.9
11TH	108.92	-33.7	3.8	1461	853	-23.0	4.4	-752.4	107.0	-11.2	-95.1	1.3
12TH	119.59	-35.5	3.4	1461	853	-24.3	4.0	-718.7	103.2	-10.1	-87.2	.7
14TH	130.25	-36.6	2.9	1461	853	-25.0	3.4	-683.2	99.8	-9.0	-79.7	.0
15TH	140.92	-35.9	4.1	1396	853	-25.7	4.8	-646.6	96.9	-8.0	-72.7	-.8
16TH	151.59	-33.7	4.9	1264	853	-26.7	5.8	-610.7	92.8	-7.0	-65.9	-1.5
17TH	162.26	-32.0	7.5	1131	853	-28.3	8.8	-577.0	87.9	-6.0	-59.6	-2.0
18TH	172.92	-28.9	8.4	999	853	-28.9	9.8	-545.0	80.4	-5.1	-53.6	-2.4
19TH	183.59	-25.5	8.2	853	853	-29.8	9.6	-516.1	72.0	-4.3	-48.0	-2.5
20TH	194.26	-25.8	9.3	853	853	-30.3	10.9	-490.7	63.8	-3.6	-42.6	-2.5
21ST	204.92	-27.0	8.7	853	853	-31.6	10.1	-464.8	54.4	-2.9	-37.5	-2.3
22ND	215.59	-28.1	7.4	853	853	-32.9	8.7	-437.9	45.8	-2.4	-32.7	-2.2
23RD	226.26	-29.2	6.2	853	853	-34.2	7.3	-409.8	38.3	-1.9	-28.2	-2.0
24TH	236.92	-30.3	5.0	853	853	-35.5	5.9	-380.6	32.1	-1.6	-24.0	-1.9
25TH	247.59	-31.4	4.1	853	853	-36.8	4.8	-350.3	27.1	-1.2	-20.1	-1.7
26TH	258.26	-32.1	3.7	853	853	-37.6	4.4	-318.9	23.0	-1.0	-16.5	-1.5
27TH	268.92	-32.8	3.3	853	853	-38.5	3.9	-286.8	19.3	-.8	-13.3	-1.3
28TH	279.59	-33.6	2.9	853	853	-39.3	3.4	-253.9	15.9	-.6	-10.4	-1.1
29TH	290.26	-34.3	2.5	853	853	-40.2	3.0	-220.4	13.0	-.4	-7.8	-.9
30TH	300.93	-35.0	2.1	853	853	-41.0	2.5	-186.1	10.5	-.3	-5.7	-.7
31ST	311.59	-35.7	2.4	853	853	-41.9	2.8	-151.1	8.3	-.2	-3.9	-.5
32ND	322.26	-36.2	3.0	853	853	-42.5	3.5	-115.3	6.0	-.1	-2.5	-.2
33RD	332.93	-30.2	1.2	767	853	-39.4	1.5	-79.1	3.0	-.1	-1.4	.0
34TH	343.59	-21.9	.5	592	853	-37.0	.6	-48.9	1.7	-.0	-.7	.2
35TH	354.26	-25.5	.6	678	1820	-37.6	.3	-27.0	1.2	-.0	-.3	.1
PARA	377.01	-1.5	.6	49	639	-30.2	.9	-1.5	.6	-.0	-.0	-.1

TABLE 7. SHEAR AND MOMENT DIAGRAMS : 1221 BRICKELL BUILDING
WIND DIRECTION 40 CONFIGURATION A REFERENCE PRESSURE 48.0 PSF GUST FACTOR 1.32

FLOOR	HEIGHT FT	X-FORCE KIPS	Y-FORCE KIPS	X-AREA SQ FT	Y-AREA SQ FT	X-PRESS PSF	Y-PRESS PSF	X-SHEAR KIPS	Y-SHEAR KIPS	X-MOMENT	Y-MOMENT	Z-MOMENT
										1000-FT-KIPS		
1ST	0.00	-52.8	5.6	1598	1033	-33.0	5.4	-1401.2	425.7	-90.3	-246.5	12.7
2ND	12.92	-41.1	4.5	1320	853	-31.1	5.2	-1348.5	420.1	-84.8	-228.7	11.1
3RD	23.58	-41.9	2.6	1391	853	-30.1	3.0	-1307.4	415.6	-80.4	-214.6	10.0
4TH	34.25	-42.5	6.1	1461	853	-29.1	7.1	-1265.5	413.1	-76.0	-200.9	8.9
5TH	44.92	-42.1	7.3	1461	853	-28.8	8.5	-1223.0	407.0	-71.6	-187.6	7.9
6TH	55.58	-42.0	7.3	1461	853	-28.7	8.5	-1180.9	399.7	-67.3	-174.8	7.0
7TH	66.25	-42.7	7.5	1461	853	-29.2	8.8	-1138.9	392.4	-63.1	-162.4	6.2
8TH	76.92	-44.0	7.8	1461	853	-30.1	9.1	-1096.3	385.0	-58.9	-150.5	5.3
9TH	87.59	-45.3	8.0	1461	853	-31.0	9.4	-1052.3	377.2	-54.8	-139.0	4.5
10TH	98.25	-46.6	8.3	1461	853	-31.9	9.7	-1007.0	369.2	-50.9	-128.0	3.6
11TH	108.92	-47.9	8.5	1461	853	-32.8	10.0	-960.5	360.9	-47.0	-117.5	2.6
12TH	119.59	-49.2	8.6	1461	853	-33.6	10.1	-912.6	352.3	-43.2	-107.5	1.7
14TH	130.25	-49.3	8.3	1461	853	-33.7	9.7	-863.4	343.7	-39.5	-98.1	.7
15TH	140.92	-48.9	11.7	1396	853	-35.1	13.7	-814.1	335.4	-35.8	-89.1	-.3
16TH	151.59	-45.5	13.7	1264	853	-36.0	16.0	-765.2	323.8	-32.3	-80.7	-1.3
17TH	162.26	-42.7	16.6	1131	853	-37.8	19.5	-719.6	310.1	-28.9	-72.8	-1.9
18TH	172.92	-38.3	18.4	999	853	-38.3	21.5	-676.9	293.4	-25.7	-65.3	-2.4
19TH	183.59	-34.1	18.5	853	853	-39.9	21.7	-638.6	275.0	-22.7	-58.3	-2.5
20TH	194.26	-34.2	19.1	853	853	-40.1	22.4	-604.6	256.6	-19.9	-51.7	-2.5
21ST	204.92	-35.0	19.1	853	853	-41.1	22.3	-570.4	237.4	-17.2	-45.4	-2.4
22ND	215.59	-35.9	18.8	853	853	-42.1	22.0	-535.3	218.4	-14.8	-39.5	-2.2
23RD	226.26	-36.7	18.4	853	853	-43.0	21.6	-499.4	199.6	-12.6	-34.0	-2.1
24TH	236.92	-37.6	18.1	853	853	-44.0	21.3	-462.7	181.2	-10.5	-28.9	-1.9
25TH	247.59	-38.4	17.8	853	853	-45.0	20.9	-425.1	163.0	-8.7	-24.1	-1.7
26TH	258.26	-39.3	17.6	853	853	-46.1	20.6	-386.7	145.2	-7.0	-19.8	-1.5
27TH	268.92	-40.2	17.3	853	853	-47.2	20.3	-347.4	127.7	-5.6	-15.9	-1.3
28TH	279.59	-41.2	17.0	853	853	-48.2	20.0	-307.1	110.4	-4.3	-12.4	-1.1
29TH	290.26	-42.1	16.8	853	853	-49.3	19.7	-266.0	93.3	-3.2	-9.3	-.8
30TH	300.93	-43.0	16.5	853	853	-50.4	19.3	-223.9	76.6	-2.3	-6.7	-.6
31ST	311.59	-43.9	16.5	853	853	-51.4	19.3	-180.9	60.1	-1.6	-4.6	-.3
32ND	322.26	-43.1	15.9	853	853	-50.5	18.6	-137.0	43.6	-1.0	-2.9	-.1
33RD	332.93	-36.6	6.6	767	853	-47.8	7.7	-93.9	27.6	-.7	-1.6	.2
34TH	343.59	-26.9	6.4	592	853	-45.4	7.5	-57.3	21.0	-.4	-.8	.3
35TH	354.26	-29.0	11.4	678	1820	-42.7	6.3	-30.4	14.7	-.2	-.4	.3
PARA	377.01	-1.4	3.2	49	639	-29.1	5.1	-1.4	3.2	-.0	-.0	-.0

TABLE 7. SHEAR AND MOMENT DIAGRAMS : 1221 BRICKELL BUILDING
WIND DIRECTION 50 CONFIGURATION A REFERENCE PRESSURE 48.0 PSF GUST FACTOR 1.32

FLOOR	HEIGHT FT	X-FORCE KIPS	Y-FORCE KIPS	X-AREA SQ FT	Y-AREA SQ FT	X-PRESS PSF	Y-PRESS PSF	X-SHEAR KIPS	Y-SHEAR KIPS	X-MOMENT	Y-MOMENT	Z-MOMENT
										1000-FT-KIPS		
1ST	0.00	-55.7	5.2	1598	1033	-34.8	5.1	-1480.9	655.7	-143.9	-250.2	17.0
2ND	12.92	-44.4	3.8	1320	853	-33.6	4.5	-1425.2	650.4	-135.4	-231.4	15.2
3RD	23.58	-45.4	.9	1391	853	-32.6	1.1	-1380.8	646.6	-128.5	-216.5	13.9
4TH	34.25	-46.5	5.4	1461	853	-31.8	6.3	-1335.4	645.7	-121.6	-202.0	12.6
5TH	44.92	-46.7	8.6	1461	853	-31.9	10.1	-1289.0	640.3	-114.8	-188.0	11.5
6TH	55.58	-46.8	9.4	1461	853	-32.0	11.0	-1242.3	631.7	-108.0	-174.5	10.4
7TH	66.25	-47.3	10.5	1461	853	-32.4	12.3	-1195.5	622.3	-101.3	-161.5	9.4
8TH	76.92	-49.3	11.6	1461	853	-33.7	13.6	-1148.2	611.8	-94.7	-149.0	8.4
9TH	87.59	-51.3	12.7	1461	853	-35.1	14.8	-1098.9	600.3	-88.2	-137.0	7.3
10TH	98.25	-53.3	13.8	1461	853	-36.5	16.1	-1047.6	587.6	-81.9	-125.5	6.2
11TH	108.92	-55.3	14.8	1461	853	-37.9	17.3	-994.2	573.9	-75.7	-114.7	5.0
12TH	119.59	-57.4	15.4	1461	853	-39.2	18.1	-938.9	559.1	-69.7	-104.3	3.8
14TH	130.25	-57.2	15.9	1461	853	-39.2	18.6	-881.5	543.6	-63.8	-94.6	2.6
15TH	140.92	-54.9	22.7	1396	853	-39.3	26.6	-824.3	527.8	-58.1	-85.5	1.3
16TH	151.59	-50.9	23.8	1264	853	-40.3	27.9	-769.4	505.1	-52.6	-77.0	.3
17TH	162.26	-47.6	25.5	1131	853	-42.1	29.9	-718.6	481.2	-47.3	-69.1	-.5
18TH	172.92	-42.2	26.4	999	853	-42.2	31.0	-671.0	455.7	-42.3	-61.7	-.9
19TH	183.59	-38.2	26.8	853	853	-44.8	31.4	-628.8	429.3	-37.6	-54.8	-1.1
20TH	194.26	-37.6	26.8	853	853	-44.1	31.4	-590.5	402.5	-33.1	-48.3	-1.1
21ST	204.92	-37.9	26.9	853	853	-44.4	31.5	-553.0	375.7	-29.0	-42.2	-1.0
22ND	215.59	-38.2	26.8	853	853	-44.8	31.4	-515.0	348.8	-25.1	-36.5	-1.0
23RD	226.26	-38.5	26.8	853	853	-45.1	31.4	-476.8	322.0	-21.5	-31.2	-.9
24TH	236.92	-38.8	26.8	853	853	-45.5	31.3	-438.3	295.2	-18.3	-26.3	-.8
25TH	247.59	-39.1	26.7	853	853	-45.9	31.3	-399.5	268.4	-15.3	-21.8	-.6
26TH	258.26	-39.4	26.7	853	853	-46.2	31.2	-360.3	241.7	-12.5	-17.8	-.5
27TH	268.92	-39.7	26.6	853	853	-46.6	31.2	-320.9	215.1	-10.1	-14.1	-.3
28TH	279.59	-40.0	26.5	853	853	-46.9	31.1	-281.1	188.5	-7.9	-10.9	-.2
29TH	290.26	-40.3	26.5	853	853	-47.3	31.0	-241.1	161.9	-6.1	-8.1	-.0
30TH	300.93	-40.6	26.4	853	853	-47.6	31.0	-200.8	135.4	-4.5	-5.8	.1
31ST	311.59	-40.9	26.3	853	853	-48.0	30.8	-160.1	109.0	-3.2	-3.9	.3
32ND	322.26	-40.2	24.3	853	853	-47.1	28.5	-119.2	82.7	-2.2	-2.4	.5
33RD	332.93	-32.4	13.6	767	853	-42.3	15.9	-79.0	58.4	-1.4	-1.3	.6
34TH	343.59	-23.7	13.3	592	853	-40.0	15.6	-46.6	44.8	-.9	-.6	.6
35TH	354.26	-22.1	25.5	678	1820	-32.6	14.0	-22.9	31.5	-.4	-.3	.4
PARA	377.01	-.8	6.0	49	639	-16.3	9.3	-.8	6.0	-.0	-.0	-.0

TABLE 7. SHEAR AND MOMENT DIAGRAMS : 1221 BRICKELL BUILDING
WIND DIRECTION 60 CONFIGURATION A REFERENCE PRESSURE 48.0 PSF GUST FACTOR 1.32

FLOOR	HEIGHT FT	X-FORCE KIPS	Y-FORCE KIPS	X-AREA SQ FT	Y-AREA SQ FT	X-PRESS PSF	Y-PRESS PSF	X-SHEAR KIPS	Y-SHEAR KIPS	X-MOMENT 1000-FT-KIPS	Y-MOMENT 1000-FT-KIPS	Z-MOMENT 1000-FT-KIPS
1ST	0.00	-55.4	9.0	1598	1033	-34.7	8.7	-1480.8	944.2	-208.1	-246.0	18.9
2ND	12.92	-44.2	6.0	1320	853	-33.5	7.0	-1425.3	935.1	-196.0	-227.3	17.3
3RD	23.58	-46.3	1.6	1391	853	-33.2	1.9	-1381.1	929.1	-186.0	-212.3	16.1
4TH	34.25	-48.5	6.7	1461	853	-33.2	7.9	-1334.9	927.5	-176.1	-197.8	15.0
5TH	44.92	-48.9	11.8	1461	853	-33.5	13.9	-1286.4	920.8	-166.3	-183.8	14.0
6TH	55.58	-49.4	13.3	1461	853	-33.8	15.6	-1237.4	908.9	-156.5	-170.4	13.0
7TH	66.25	-50.6	14.8	1461	853	-34.6	17.3	-1188.0	895.7	-146.9	-157.4	12.0
8TH	76.92	-52.4	16.3	1461	853	-35.8	19.1	-1137.4	880.9	-137.4	-145.0	11.0
9TH	87.59	-54.1	17.8	1461	853	-37.0	20.9	-1085.1	864.6	-128.1	-133.2	9.9
10TH	98.25	-55.9	19.3	1461	853	-38.3	22.6	-1031.0	846.8	-119.0	-121.9	8.7
11TH	108.92	-57.7	20.7	1461	853	-39.5	24.3	-975.0	827.5	-110.0	-111.2	7.5
12TH	119.59	-59.5	21.9	1461	853	-40.7	25.6	-917.4	806.8	-101.3	-101.1	6.3
14TH	130.25	-58.3	23.8	1461	853	-39.9	27.8	-857.9	784.9	-92.8	-91.6	4.9
15TH	140.92	-55.0	32.9	1396	853	-39.4	38.5	-799.6	761.1	-84.6	-82.8	3.6
16TH	151.59	-50.6	33.8	1264	853	-40.1	39.6	-744.5	728.3	-76.6	-74.6	2.5
17TH	162.26	-46.8	35.4	1131	853	-41.4	41.5	-693.9	694.5	-69.1	-66.9	1.7
18TH	172.92	-40.6	36.9	999	853	-40.7	43.2	-647.1	659.1	-61.8	-59.7	1.2
19TH	183.59	-36.4	36.6	853	853	-42.7	42.9	-606.5	622.2	-55.0	-53.1	.9
20TH	194.26	-36.1	36.8	853	853	-42.3	43.1	-570.1	585.5	-48.6	-46.8	.9
21ST	204.92	-36.4	37.5	853	853	-42.7	43.9	-534.0	548.7	-42.5	-40.9	.8
22ND	215.59	-36.8	38.0	853	853	-43.1	44.6	-497.5	511.2	-36.9	-35.4	.8
23RD	226.26	-37.1	38.5	853	853	-43.4	45.2	-460.8	473.2	-31.6	-30.3	.8
24TH	236.92	-37.4	39.0	853	853	-43.8	45.8	-423.7	434.7	-26.8	-25.6	.8
25TH	247.59	-37.7	39.4	853	853	-44.2	46.1	-386.3	395.6	-22.3	-21.2	.8
26TH	258.26	-37.9	39.4	853	853	-44.4	46.2	-348.6	356.3	-18.3	-17.3	.8
27TH	268.92	-38.1	39.5	853	853	-44.6	46.3	-310.7	316.8	-14.7	-13.8	.8
28TH	279.59	-38.3	39.6	853	853	-44.9	46.4	-272.6	277.3	-11.6	-10.7	.9
29TH	290.26	-38.5	39.7	853	853	-45.1	46.5	-234.3	237.7	-8.8	-8.0	.9
30TH	300.93	-38.7	39.7	853	853	-45.4	46.6	-195.8	198.0	-6.5	-5.7	.9
31ST	311.59	-38.9	39.5	853	853	-45.6	46.3	-157.1	158.3	-4.6	-3.8	.9
32ND	322.26	-39.2	35.7	853	853	-46.0	41.8	-118.2	118.8	-3.1	-2.3	1.0
33RD	332.93	-33.5	17.9	767	853	-43.6	20.9	-79.0	83.1	-2.0	-1.3	1.1
34TH	343.59	-23.1	18.6	592	853	-39.1	21.9	-45.5	65.2	-1.3	-.6	.9
35TH	354.26	-21.4	38.2	678	1820	-31.6	21.0	-22.4	46.6	-.7	-.3	.6
PARA	377.01	-.9	8.4	49	639	-19.1	13.1	-.9	8.4	-.0	-.0	.1

TABLE 7. SHEAR AND MOMENT DIAGRAMS : 1221 BRICKELL BUILDING
WIND DIRECTION 70 CONFIGURATION A REFERENCE PRESSURE 48.0 PSF GUST FACTOR 1.32

FLOOR	HEIGHT FT	X-FORCE KIPS	Y-FORCE KIPS	X-AREA SQ FT	Y-AREA SQ FT	X-PRESS PSF	Y-PRESS PSF	X-SHEAR KIPS	Y-SHEAR KIPS	X-MOMENT 1000-FT-KIPS	Y-MOMENT 1000-FT-KIPS	Z-MOMENT 1000-FT-KIPS
1ST	0.00	-50.6	12.7	1598	1033	-31.7	12.3	-1317.6	1164.0	-256.6	-209.6	20.4
2ND	12.92	-41.3	8.9	1320	853	-31.3	10.5	-1267.0	1151.3	-241.6	-192.9	19.1
3RD	23.58	-44.7	4.0	1391	853	-32.1	4.7	-1225.7	1142.4	-229.4	-179.6	18.0
4TH	34.25	-48.5	8.1	1461	853	-33.2	9.5	-1181.0	1138.4	-217.2	-166.8	17.0
5TH	44.92	-49.5	14.6	1461	853	-33.9	17.1	-1132.4	1130.3	-205.1	-154.5	16.1
6TH	55.58	-50.5	16.3	1461	853	-34.6	19.1	-1083.0	1115.7	-193.1	-142.6	15.2
7TH	66.25	-51.5	18.1	1461	853	-35.2	21.2	-1032.5	1099.4	-181.3	-131.4	14.2
8TH	76.92	-52.1	19.9	1461	853	-35.6	23.3	-981.0	1081.3	-169.7	-120.6	13.2
9TH	87.59	-52.6	21.7	1461	853	-36.0	25.5	-928.9	1061.4	-158.3	-110.4	12.2
10TH	98.25	-53.2	23.6	1461	853	-36.4	27.6	-876.3	1039.6	-147.0	-100.8	11.0
11TH	108.92	-53.8	25.3	1461	853	-36.8	29.7	-823.1	1016.1	-136.1	-91.7	9.8
12TH	119.59	-54.4	27.1	1461	853	-37.2	31.7	-769.3	990.7	-125.4	-83.3	8.5
14TH	130.25	-52.4	30.6	1461	853	-35.9	35.9	-714.9	963.6	-115.0	-75.3	7.2
15TH	140.92	-49.6	42.2	1396	853	-35.6	49.4	-662.5	933.0	-104.8	-68.0	5.9
16TH	151.59	-44.9	42.2	1264	853	-35.5	49.4	-612.8	890.8	-95.1	-61.2	4.7
17TH	162.26	-40.7	42.2	1131	853	-36.0	49.5	-568.0	848.6	-85.8	-54.9	3.9
18TH	172.92	-34.6	43.7	999	853	-34.7	51.3	-527.3	806.4	-77.0	-49.1	3.3
19TH	183.59	-30.6	43.0	853	853	-35.8	50.4	-492.6	762.7	-68.6	-43.6	3.0
20TH	194.26	-29.6	42.6	853	853	-34.7	49.9	-462.1	719.7	-60.7	-38.5	2.8
21ST	204.92	-29.4	43.7	853	853	-34.4	51.3	-432.5	677.1	-53.3	-33.8	2.6
22ND	215.59	-29.2	45.0	853	853	-34.2	52.7	-403.1	633.4	-46.3	-29.3	2.5
23RD	226.26	-29.0	46.2	853	853	-33.9	54.1	-374.0	588.4	-39.8	-25.1	2.3
24TH	236.92	-28.8	47.4	853	853	-33.7	55.5	-345.0	542.2	-33.7	-21.3	2.2
25TH	247.59	-28.7	48.2	853	853	-33.6	56.5	-316.2	494.8	-28.2	-17.8	2.0
26TH	258.26	-29.4	48.6	853	853	-34.4	56.9	-287.5	446.6	-23.2	-14.6	1.9
27TH	268.92	-30.0	48.9	853	853	-35.2	57.3	-258.2	398.1	-18.7	-11.7	1.8
28TH	279.59	-30.7	49.2	853	853	-35.9	57.7	-228.2	349.2	-14.7	-9.1	1.6
29TH	290.26	-31.3	49.5	853	853	-36.7	58.1	-197.5	300.0	-11.2	-6.8	1.5
30TH	300.93	-32.0	49.9	853	853	-37.5	58.4	-166.2	250.4	-8.3	-4.9	1.4
31ST	311.59	-32.6	49.7	853	853	-38.2	58.2	-134.2	200.6	-5.9	-3.3	1.3
32ND	322.26	-33.1	45.4	853	853	-38.8	53.2	-101.6	150.9	-4.0	-2.0	1.2
33RD	332.93	-30.2	20.5	767	853	-39.3	24.1	-68.5	105.5	-2.7	-1.1	1.2
34TH	343.59	-20.4	23.3	592	853	-34.4	27.3	-38.3	85.0	-1.6	-.5	1.1
35TH	354.26	-17.3	51.2	678	1820	-25.5	28.1	-18.0	61.7	-.9	-.2	.7
PARA	377.01	-.7	10.5	49	639	-14.3	16.4	-.7	10.5	-.0	-.0	.1

TABLE 7. SHEAR AND MOMENT DIAGRAMS : 1221 BRICKELL BUILDING
WIND DIRECTION 80 CONFIGURATION A REFERENCE PRESSURE 48.0 PSF GUST FACTOR 1.32

FLOOR	HEIGHT FT	X-FORCE KIPS	Y-FORCE KIPS	X-AREA SQ FT	Y-AREA SQ FT	X-PRESS PSF	Y-PRESS PSF	X-SHEAR KIPS	Y-SHEAR KIPS	X-MOMENT 1000-FT-KIPS	Y-MOMENT 1000-FT-KIPS	Z-MOMENT 1000-FT-KIPS
1ST	0.00	-40.0	25.1	1598	1033	-25.0	24.2	-828.4	1399.8	-286.1	-118.8	20.4
2ND	12.92	-32.7	16.0	1320	853	-24.7	18.7	-788.4	1374.7	-268.2	-108.4	19.5
3RD	23.58	-35.1	8.9	1391	853	-25.2	10.4	-755.7	1358.7	-253.6	-100.1	18.6
4TH	34.25	-38.3	12.7	1461	853	-26.2	14.8	-720.6	1349.9	-239.2	-92.3	17.8
5TH	44.92	-37.2	22.7	1461	853	-25.5	26.6	-682.3	1337.2	-224.8	-84.8	17.1
6TH	55.58	-36.2	25.7	1461	853	-24.7	30.2	-645.1	1314.5	-210.7	-77.7	16.3
7TH	66.25	-36.8	28.9	1461	853	-25.2	33.8	-608.9	1288.7	-196.8	-71.0	15.4
8TH	76.92	-37.0	32.0	1461	853	-25.3	37.5	-572.2	1259.9	-183.2	-64.7	14.5
9TH	87.59	-37.2	35.2	1461	853	-25.5	41.2	-535.2	1227.8	-170.0	-58.8	13.6
10TH	98.25	-37.4	38.3	1461	853	-25.6	44.9	-498.0	1192.7	-157.0	-53.3	12.5
11TH	108.92	-37.6	41.1	1461	853	-25.8	48.2	-460.6	1154.4	-144.5	-48.2	11.4
12TH	119.59	-37.8	42.6	1461	853	-25.9	49.9	-422.9	1113.3	-132.4	-43.5	10.2
14TH	130.25	-36.2	46.1	1461	853	-24.8	54.0	-385.1	1070.7	-120.8	-39.2	9.0
15TH	140.92	-32.3	56.2	1396	853	-23.1	65.9	-348.9	1024.6	-109.6	-35.2	7.8
16TH	151.59	-28.2	53.3	1264	853	-22.3	62.5	-316.6	968.4	-99.0	-31.7	6.7
17TH	162.26	-24.5	51.3	1131	853	-21.6	60.1	-288.4	915.1	-88.9	-28.5	5.9
18TH	172.92	-19.5	50.7	999	853	-19.6	59.4	-264.0	863.8	-79.4	-25.5	5.3
19TH	183.59	-16.2	50.6	853	853	-18.9	59.3	-244.4	813.1	-70.5	-22.8	4.9
20TH	194.26	-14.5	50.0	853	853	-17.0	58.6	-228.3	762.5	-62.1	-20.3	4.6
21ST	204.92	-13.9	50.4	853	853	-16.2	59.1	-213.8	712.5	-54.2	-17.9	4.3
22ND	215.59	-13.2	51.0	853	853	-15.5	59.7	-199.9	662.1	-46.9	-15.7	4.1
23RD	226.26	-12.6	51.5	853	853	-14.7	60.4	-186.7	611.1	-40.1	-13.7	3.8
24TH	236.92	-11.9	52.0	853	853	-14.0	61.0	-174.2	559.6	-33.9	-11.7	3.5
25TH	247.59	-11.5	52.3	853	853	-13.5	61.3	-162.2	507.6	-28.2	-9.9	3.2
26TH	258.26	-12.4	52.3	853	853	-14.5	61.3	-150.7	455.2	-23.0	-8.3	2.9
27TH	268.92	-13.3	52.3	853	853	-15.6	61.2	-138.3	402.9	-18.5	-6.7	2.6
28TH	279.59	-14.2	52.2	853	853	-16.6	61.2	-125.0	350.7	-14.4	-5.3	2.3
29TH	290.26	-15.1	52.2	853	853	-17.7	61.1	-110.9	298.4	-11.0	-4.1	2.0
30TH	300.93	-16.0	52.1	853	853	-18.7	61.1	-95.8	246.3	-8.1	-3.0	1.7
31ST	311.59	-16.9	51.3	853	853	-19.7	60.2	-79.8	194.2	-5.7	-2.0	1.4
32ND	322.26	-17.9	45.8	853	853	-21.0	53.7	-63.0	142.8	-3.9	-1.3	1.2
33RD	332.93	-21.2	13.1	767	853	-27.7	15.3	-45.0	97.0	-2.7	-.7	1.0
34TH	343.59	-12.6	19.9	592	853	-21.3	23.3	-23.8	84.0	-1.7	-.3	.9
35TH	354.26	-10.7	53.0	678	1820	-15.7	29.1	-11.2	64.1	-.9	-.1	.6
PARA	377.01	-.5	11.1	49	639	-10.8	17.3	-.5	11.1	-.0	-.0	.1

TABLE 7. SHEAR AND MOMENT DIAGRAMS : 1221 BRICKELL BUILDING
WIND DIRECTION 90 CONFIGURATION A REFERENCE PRESSURE 48.0 PSF GUST FACTOR 1.32

FLOOR	HEIGHT FT	X-FORCE KIPS	Y-FORCE KIPS	X-AREA SQ FT	Y-AREA SQ FT	X-PRESS PSF	Y-PRESS PSF	X-SHEAR KIPS	Y-SHEAR KIPS	X-MOMENT 1000-FT-KIPS	Y-MOMENT 1000-FT-KIPS	Z-MOMENT 1000-FT-KIPS
1ST	0.00	-23.8	26.7	1598	1033	-14.9	25.8	-330.6	1399.8	-283.5	-27.5	17.3
2ND	12.92	-20.5	16.4	1320	853	-15.5	19.2	-306.8	1373.1	-265.6	-23.4	16.8
3RD	23.58	-22.9	8.3	1391	853	-16.5	9.7	-286.3	1356.7	-251.0	-20.2	16.3
4TH	34.25	-26.2	12.3	1461	853	-17.9	14.4	-263.4	1348.4	-236.6	-17.3	15.8
5TH	44.92	-24.4	22.8	1461	853	-16.7	26.8	-237.2	1336.2	-222.3	-14.6	15.4
6TH	55.58	-22.9	26.2	1461	853	-15.7	30.7	-212.8	1313.3	-208.1	-12.2	14.8
7TH	66.25	-23.9	29.6	1461	853	-16.3	34.7	-189.9	1287.1	-194.3	-10.1	14.2
8TH	76.92	-23.5	33.0	1461	853	-16.1	38.7	-166.0	1257.4	-180.7	-8.2	13.5
9TH	87.59	-23.1	36.4	1461	853	-15.8	42.6	-142.5	1224.5	-167.4	-6.5	12.8
10TH	98.25	-22.8	39.7	1461	853	-15.6	46.6	-119.4	1188.1	-154.6	-5.1	11.9
11TH	108.92	-22.4	42.7	1461	853	-15.3	50.1	-96.6	1148.3	-142.1	-4.0	11.0
12TH	119.59	-22.0	43.9	1461	853	-15.1	51.5	-74.3	1105.6	-130.1	-3.1	10.1
14TH	130.25	-19.9	47.3	1461	853	-13.6	55.4	-52.2	1061.7	-118.5	-2.4	9.0
15TH	140.92	-16.1	56.2	1396	853	-11.5	65.8	-32.4	1014.4	-107.5	-1.9	8.0
16TH	151.59	-12.1	53.8	1264	853	-9.6	63.0	-16.3	958.2	-96.9	-1.7	7.0
17TH	162.26	-8.2	51.8	1131	853	-7.2	60.8	-4.2	904.4	-87.0	-1.6	6.3
18TH	172.92	-3.5	50.8	999	853	-3.5	59.6	4.0	852.6	-77.6	-1.6	5.7
19TH	183.59	-.2	50.1	853	853	-.2	58.7	7.5	801.7	-68.8	-1.6	5.3
20TH	194.26	1.4	49.8	853	853	1.6	58.4	7.7	751.6	-60.5	-1.7	5.0
21ST	204.92	2.2	50.2	853	853	2.5	58.9	6.3	701.8	-52.8	-1.8	4.8
22ND	215.59	2.9	50.8	853	853	3.4	59.5	4.1	651.5	-45.6	-1.8	4.5
23RD	226.26	3.7	51.3	853	853	4.3	60.1	1.2	600.8	-38.9	-1.9	4.2
24TH	236.92	4.4	51.8	853	853	5.2	60.7	-2.5	549.5	-32.7	-1.9	3.9
25TH	247.59	4.9	52.2	853	853	5.8	61.1	-7.0	497.7	-27.2	-1.8	3.6
26TH	258.26	3.8	52.3	853	853	4.5	61.3	-11.9	445.5	-22.1	-1.7	3.3
27TH	268.92	2.8	52.4	853	853	3.2	61.4	-15.7	393.2	-17.7	-1.6	3.0
28TH	279.59	1.7	52.5	853	853	2.0	61.6	-18.5	340.8	-13.7	-1.4	2.6
29TH	290.26	.6	52.7	853	853	.7	61.7	-20.2	288.3	-10.4	-1.2	2.3
30TH	300.93	-.5	52.8	853	853	-.6	61.9	-20.8	235.6	-7.6	-1.0	1.9
31ST	311.59	-1.6	52.0	853	853	-1.8	61.0	-20.3	182.8	-5.4	-.7	1.5
32ND	322.26	-3.7	45.7	853	853	-4.3	53.5	-18.7	130.8	-3.7	-.5	1.2
33RD	332.93	-3.5	5.7	767	853	-4.6	6.7	-15.0	85.1	-2.5	-.3	.8
34TH	343.59	-3.7	15.8	592	853	-6.3	18.5	-11.5	79.4	-1.7	-.2	.6
35TH	354.26	-7.2	52.2	678	1820	-10.6	28.7	-7.8	63.6	-.9	-.1	.4
PARA	377.01	-.6	11.4	49	639	-13.1	17.9	-.6	11.4	-.0	-.0	.1

TABLE 7. SHEAR AND MOMENT DIAGRAMS : 1221 BRICKELL BUILDING
WIND DIRECTION 100 CONFIGURATION A REFERENCE PRESSURE 48.0 PSF GUST FACTOR 1.32

FLOOR	HEIGHT FT	X-FORCE KIPS	Y-FORCE KIPS	X-AREA SQ FT	Y-AREA SQ FT	X-PRESS PSF	Y-PRESS PSF	X-SHEAR KIPS	Y-SHEAR KIPS	X-MOMENT	Y-MOMENT	Z-MOMENT
										1000-FT-KIPS		
1ST	0.00	-7.1	23.8	1598	1033	-4.4	23.0	-43.0	1372.7	-281.0	8.5	6.5
2ND	12.92	-6.6	13.7	1320	853	-5.0	16.1	-36.0	1348.9	-263.5	9.0	6.4
3RD	23.58	-7.7	6.1	1391	853	-5.6	7.2	-29.3	1335.2	-249.1	9.4	6.4
4TH	34.25	-9.2	9.5	1461	853	-6.3	11.1	-21.6	1329.1	-234.9	9.7	6.3
5TH	44.92	-8.3	19.9	1461	853	-5.7	23.3	-12.4	1319.6	-220.8	9.8	6.2
6TH	55.58	-8.0	23.7	1461	853	-5.5	27.7	-4.0	1299.7	-206.8	9.9	6.0
7TH	66.25	-9.6	27.3	1461	853	-6.6	32.0	3.9	1276.1	-193.1	9.9	5.8
8TH	76.92	-9.1	30.9	1461	853	-6.2	36.2	13.6	1248.8	-179.6	9.8	5.6
9TH	87.59	-8.6	34.4	1461	853	-5.9	40.4	22.7	1217.9	-166.5	9.6	5.3
10TH	98.25	-8.1	38.0	1461	853	-5.6	44.6	31.3	1183.5	-153.7	9.4	4.9
11TH	108.92	-7.6	41.2	1461	853	-5.2	48.3	39.4	1145.4	-141.2	9.0	4.6
12TH	119.59	-7.1	42.8	1461	853	-4.9	50.2	47.0	1104.2	-129.2	8.5	4.1
14TH	130.25	-5.5	47.9	1461	853	-3.8	56.2	54.2	1061.4	-117.7	8.0	3.7
15TH	140.92	-4.6	56.1	1396	853	-3.3	65.8	59.7	1013.5	-106.6	7.4	3.2
16TH	151.59	-1.8	53.6	1264	853	-1.4	62.8	64.3	957.4	-96.1	6.7	2.7
17TH	162.26	-.3	51.1	1131	853	-.3	59.9	66.1	903.8	-86.2	6.0	2.4
18TH	172.92	2.8	50.8	999	853	2.8	59.6	66.4	852.7	-76.8	5.3	2.1
19TH	183.59	3.4	50.1	853	853	4.0	58.7	63.6	801.9	-68.0	4.6	2.0
20TH	194.26	5.0	49.2	853	853	5.9	57.6	60.2	751.8	-59.7	4.0	1.9
21ST	204.92	4.9	50.1	853	853	5.8	58.7	55.2	702.6	-52.0	3.3	1.9
22ND	215.59	4.9	51.1	853	853	5.7	59.9	50.3	652.5	-44.7	2.8	1.8
23RD	226.26	4.8	52.2	853	853	5.6	61.2	45.4	601.4	-38.0	2.3	1.8
24TH	236.92	4.7	53.2	853	853	5.5	62.4	40.6	549.2	-31.9	1.8	1.7
25TH	247.59	4.6	53.9	853	853	5.4	63.1	35.9	496.0	-26.3	1.4	1.6
26TH	258.26	4.6	53.9	853	853	5.4	63.1	31.3	442.1	-21.3	1.0	1.5
27TH	268.92	4.6	53.9	853	853	5.4	63.1	26.7	388.2	-16.9	.7	1.3
28TH	279.59	4.6	53.9	853	853	5.4	63.2	22.0	334.4	-13.0	.5	1.2
29TH	290.26	4.6	53.9	853	853	5.4	63.2	17.4	280.4	-9.8	.3	1.0
30TH	300.93	4.7	53.9	853	853	5.5	63.2	12.7	226.5	-7.1	.1	.8
31ST	311.59	4.7	52.8	853	853	5.5	61.9	8.1	172.6	-4.9	-.0	.6
32ND	322.26	3.0	45.9	853	853	3.5	53.8	3.4	119.7	-3.4	-.1	.4
33RD	332.93	2.5	1.3	767	853	3.3	1.6	.5	73.8	-2.3	-.1	.3
34TH	343.59	1.8	12.8	592	853	3.0	15.0	-2.1	72.5	-1.6	-.1	.2
35TH	354.26	-3.1	48.3	678	1820	-4.6	26.6	-3.8	59.7	-.9	-.1	.1
PARA	377.01	-.8	11.4	49	639	-15.5	17.8	-.8	11.4	-.0	-.0	.0

TABLE 7. SHEAR AND MOMENT DIAGRAMS : 1221 BRICKELL BUILDING
WIND DIRECTION 110 CONFIGURATION A REFERENCE PRESSURE 48.0 PSF GUST FACTOR 1.32

FLOOR	HEIGHT FT	X-FORCE KIPS	Y-FORCE KIPS	X-AREA SQ FT	Y-AREA SQ FT	X-PRESS PSF	Y-PRESS PSF	X-SHEAR KIPS	Y-SHEAR KIPS	X-MOMENT	Y-MOMENT	Z-MOMENT
										1000-FT-KIPS		
1ST	0.00	8.7	23.3	1598	1033	5.5	22.6	89.8	1328.3	-272.7	-2.0	-9.0
2ND	12.92	6.6	13.3	1320	853	5.0	15.6	81.0	1305.0	-255.7	-3.1	-8.7
3RD	23.58	8.8	5.9	1391	853	6.3	6.9	74.4	1291.7	-241.8	-3.9	-8.5
4TH	34.25	12.3	9.2	1461	853	8.4	10.7	65.6	1285.8	-228.1	-4.7	-8.2
5TH	44.92	11.3	18.6	1461	853	7.7	21.8	53.3	1276.7	-214.4	-5.3	-8.1
6TH	55.58	10.0	22.3	1461	853	6.8	26.1	42.0	1258.1	-200.9	-5.8	-7.9
7TH	66.25	10.0	25.8	1461	853	6.8	30.2	32.0	1235.8	-187.6	-6.2	-7.7
8TH	76.92	9.7	29.3	1461	853	6.6	34.3	22.0	1210.0	-174.6	-6.5	-7.4
9TH	87.59	9.3	32.7	1461	853	6.4	38.4	12.4	1180.8	-161.8	-6.7	-7.0
10TH	98.25	9.0	36.2	1461	853	6.1	42.4	3.1	1148.0	-149.4	-6.8	-6.6
11TH	108.92	8.6	39.4	1461	853	5.9	46.1	-5.9	1111.8	-137.3	-6.8	-6.1
12TH	119.59	8.3	41.2	1461	853	5.7	48.2	-14.5	1072.5	-125.7	-6.7	-5.6
14TH	130.25	8.0	46.1	1461	853	5.5	54.0	-22.8	1031.3	-114.5	-6.5	-5.0
15TH	140.92	5.6	53.6	1396	853	4.0	62.8	-30.8	985.2	-103.7	-6.2	-4.5
16TH	151.59	4.1	52.2	1264	853	3.2	61.2	-36.4	931.7	-93.5	-5.8	-4.0
17TH	162.26	2.1	50.6	1131	853	1.9	59.3	-40.5	879.4	-83.8	-5.4	-3.7
18TH	172.92	1.2	50.2	999	853	1.2	58.8	-42.7	828.8	-74.7	-5.0	-3.4
19TH	183.59	-.5	49.8	853	853	-.6	58.3	-43.9	778.6	-66.2	-4.5	-3.2
20TH	194.26	.7	48.2	853	853	.8	56.5	-43.4	728.9	-58.1	-4.0	-3.0
21ST	204.92	-.3	48.8	853	853	-.3	57.2	-44.1	680.6	-50.6	-3.6	-2.8
22ND	215.59	-1.2	49.5	853	853	-1.4	58.0	-43.8	631.8	-43.6	-3.1	-2.6
23RD	226.26	-2.1	50.3	853	853	-2.5	58.9	-42.7	582.3	-37.1	-2.6	-2.4
24TH	236.92	-3.0	51.0	853	853	-3.5	59.8	-40.6	532.1	-31.2	-2.2	-2.2
25TH	247.59	-3.8	51.4	853	853	-4.5	60.3	-37.5	481.1	-25.8	-1.8	-2.1
26TH	258.26	-4.0	51.6	853	853	-4.7	60.5	-33.7	429.6	-20.9	-1.4	-1.9
27TH	268.92	-4.1	51.8	853	853	-4.9	60.6	-29.7	378.0	-16.6	-1.1	-1.8
28TH	279.59	-4.3	51.9	853	853	-5.0	60.8	-25.6	326.3	-12.8	-.8	-1.6
29TH	290.26	-4.5	52.1	853	853	-5.2	61.0	-21.3	274.4	-9.6	-.5	-1.4
30TH	300.93	-4.6	52.2	853	853	-5.4	61.2	-16.8	222.3	-7.0	-.3	-1.2
31ST	311.59	-4.8	51.5	853	853	-5.6	60.4	-12.2	170.1	-4.9	-.2	-.9
32ND	322.26	-4.4	45.4	853	853	-5.2	53.3	-7.4	118.6	-3.4	-.1	-.7
33RD	332.93	-3.7	.8	767	853	-4.9	.9	-3.0	73.2	-2.3	.0	-.5
34TH	343.59	.2	12.4	592	853	.3	14.5	.8	72.4	-1.6	.0	-.2
35TH	354.26	.7	48.5	678	1820	1.1	26.6	.6	60.0	-.9	.0	-.1
PAPA	377.01	-.1	11.5	49	639	-2.6	18.0	-.1	11.5	-.0	-.0	-.0

TABLE 7. SHEAR AND MOMENT DIAGRAMS : 1221 BRICKELL BUILDING
WIND DIRECTION 120 CONFIGURATION A REFERENCE PRESSURE 48.0 PSF GUST FACTOR 1.32

FLOOR	HEIGHT FT	X-FORCE KIPS	Y-FORCE KIPS	X-AREA SQ FT	Y-AREA SQ FT	X-PRESS PSF	Y-PRESS PSF	X-SHEAR KIPS	Y-SHEAR KIPS	X-MOMENT	Y-MOMENT	Z-MOMENT
										1000-FT-KIPS		
1ST	0.00	28.2	28.3	1598	1033	17.6	27.3	346.2	1314.0	-264.5	31.9	-19.3
2ND	12.92	21.8	17.0	1320	853	16.5	19.9	318.1	1285.7	-247.7	27.6	-18.5
3RD	23.58	24.1	9.2	1391	853	17.4	10.8	296.3	1268.7	-234.0	24.3	-17.9
4TH	34.25	27.6	13.4	1461	853	18.9	15.7	272.2	1259.5	-220.6	21.3	-17.2
5TH	44.92	26.3	21.9	1461	853	18.0	25.7	244.5	1246.1	-207.2	18.5	-16.5
6TH	55.58	24.8	25.1	1461	853	17.0	29.4	218.2	1224.2	-194.0	16.0	-15.8
7TH	66.25	24.0	28.1	1461	853	16.4	33.0	193.4	1199.2	-181.1	13.8	-15.0
8TH	76.92	22.7	31.2	1461	853	15.5	36.6	169.4	1171.0	-168.4	11.9	-14.2
9TH	87.59	21.3	34.2	1461	853	14.6	40.1	146.7	1139.8	-156.1	10.2	-13.3
10TH	98.25	19.9	37.3	1461	853	13.6	43.7	125.4	1105.6	-144.1	8.8	-12.4
11TH	108.92	18.6	39.9	1461	853	12.7	46.8	105.5	1068.3	-132.6	7.5	-11.4
12TH	119.59	17.2	41.0	1461	853	11.8	48.0	86.9	1028.4	-121.4	6.5	-10.3
14TH	130.25	15.9	44.3	1461	853	10.9	51.9	69.7	987.4	-110.6	5.7	-9.3
15TH	140.92	12.4	49.3	1396	853	8.9	57.8	53.8	943.1	-100.3	5.0	-8.2
16TH	151.59	10.0	48.6	1264	853	7.9	57.0	41.4	893.8	-90.5	4.5	-7.4
17TH	162.26	6.9	47.4	1131	853	6.1	55.6	31.4	845.2	-81.3	4.1	-6.7
18TH	172.92	3.7	47.1	999	853	3.7	55.2	24.5	797.8	-72.5	3.8	-6.1
19TH	183.59	.6	46.8	853	853	.7	54.8	20.8	750.7	-64.2	3.6	-5.7
20TH	194.26	1.4	45.7	853	853	1.6	53.6	20.2	703.9	-56.5	3.4	-5.4
21ST	204.92	.6	46.3	853	853	.7	54.3	18.8	658.2	-49.2	3.2	-5.0
22ND	215.59	-.2	47.2	853	853	-.3	55.3	18.2	611.9	-42.4	3.0	-4.7
23RD	226.26	-1.0	48.1	853	853	-1.2	56.4	18.4	564.6	-36.2	2.8	-4.3
24TH	236.92	-1.9	49.1	853	853	-2.2	57.5	19.5	516.5	-30.4	2.6	-4.0
25TH	247.59	-2.4	49.6	853	853	-2.8	58.2	21.3	467.4	-25.1	2.4	-3.7
26TH	258.26	-1.6	49.8	853	853	-1.9	58.4	23.8	417.8	-20.4	2.1	-3.4
27TH	268.92	-.8	50.0	853	853	-.9	58.5	25.4	368.0	-16.2	1.8	-3.0
28TH	279.59	.1	50.1	853	853	.1	58.7	26.1	318.1	-12.6	1.6	-2.7
29TH	290.26	.9	50.3	853	853	1.0	58.9	26.1	267.9	-9.4	1.3	-2.4
30TH	300.93	1.7	50.4	853	853	2.0	59.1	25.2	217.7	-6.9	1.0	-2.0
31ST	311.59	2.5	49.7	853	853	3.0	58.2	23.5	167.2	-4.8	.8	-1.6
32ND	322.26	3.3	43.3	853	853	3.9	50.8	21.0	117.5	-3.3	.5	-1.3
33RD	332.93	5.5	3.6	767	853	7.2	4.2	17.7	74.2	-2.3	.3	-.9
34TH	343.59	6.6	13.6	592	853	11.1	15.9	12.2	70.6	-1.5	.2	-.6
35TH	354.26	5.5	46.6	678	1820	8.1	25.6	5.6	57.1	-.8	.1	-.4
PARA	377.01	.1	10.5	49	639	1.9	16.4	.1	10.5	-.0	.0	-.0

TABLE 7. SHEAR AND MOMENT DIAGRAMS : 1221 BRICKELL BUILDING
WIND DIRECTION 130 CONFIGURATION A REFERENCE PRESSURE 48.0 PSF GUST FACTOR 1.32

FLOOR	HEIGHT FT	X-FORCE KIPS	Y-FORCE KIPS	X-AREA SQ FT	Y-AREA SQ FT	X-PRESS PSF	Y-PRESS PSF	X-SHEAR KIPS	Y-SHEAR KIPS	X-MOMENT 1000-FT-KIPS	Y-MOMENT 1000-FT-KIPS	Z-MOMENT 1000-FT-KIPS
1ST	0.00	45.1	29.5	1598	1033	28.2	28.6	790.1	1300.8	-258.0	112.1	-22.9
2ND	12.92	34.0	19.0	1320	853	25.7	22.2	745.0	1271.2	-241.3	102.2	-21.6
3RD	23.58	35.2	12.0	1391	853	25.3	14.1	711.1	1252.3	-227.9	94.4	-20.5
4TH	34.25	37.7	16.5	1461	853	25.8	19.4	675.8	1240.2	-214.6	87.0	-19.4
5TH	44.92	36.7	24.7	1461	853	25.1	29.0	638.1	1223.7	-201.4	80.0	-18.4
6TH	55.58	35.5	27.7	1461	853	24.3	32.5	601.5	1199.0	-188.5	73.4	-17.5
7TH	66.25	35.1	30.3	1461	853	24.0	35.5	565.9	1171.3	-175.9	67.2	-16.4
8TH	76.92	34.7	32.9	1461	853	23.8	38.5	530.8	1140.9	-163.6	61.3	-15.3
9TH	87.59	34.3	35.4	1461	853	23.5	41.5	496.1	1108.1	-151.6	55.8	-14.2
10TH	98.25	33.9	38.0	1461	853	23.2	44.5	461.8	1072.6	-139.9	50.7	-13.1
11TH	108.92	33.5	40.1	1461	853	22.9	47.0	427.9	1034.7	-128.7	46.0	-11.9
12TH	119.59	33.1	40.8	1461	853	22.7	47.8	394.3	994.6	-117.9	41.6	-10.7
14TH	130.25	32.0	43.4	1461	853	21.9	50.8	361.2	953.7	-107.5	37.6	-9.5
15TH	140.92	28.5	47.9	1396	853	20.4	56.1	329.2	910.4	-97.5	33.9	-8.2
16TH	151.59	25.4	46.9	1264	853	20.1	54.9	300.7	862.5	-88.1	30.5	-7.3
17TH	162.26	22.1	45.5	1131	853	19.6	53.3	275.3	815.6	-79.1	27.5	-6.5
18TH	172.92	18.3	45.5	999	853	18.3	53.4	253.2	770.1	-70.7	24.6	-5.9
19TH	183.59	14.7	45.2	853	853	17.2	52.9	234.9	724.6	-62.7	22.0	-5.4
20TH	194.26	15.1	43.8	853	853	17.7	51.4	220.2	679.4	-55.2	19.6	-5.1
21ST	204.92	14.2	44.4	853	853	16.6	52.0	205.1	635.6	-48.2	17.3	-4.8
22ND	215.59	13.3	45.1	853	853	15.6	52.8	190.9	591.3	-41.6	15.2	-4.4
23RD	226.26	12.4	45.8	853	853	14.5	53.7	177.6	546.2	-35.6	13.3	-4.1
24TH	236.92	11.5	46.6	853	853	13.5	54.6	165.1	500.3	-30.0	11.4	-3.8
25TH	247.59	10.9	47.0	853	853	12.7	55.1	153.6	453.8	-24.9	9.7	-3.4
26TH	258.26	11.5	47.1	853	853	13.5	55.2	142.8	406.8	-20.3	8.2	-3.1
27TH	268.92	12.2	47.2	853	853	14.3	55.4	131.2	359.7	-16.2	6.7	-2.8
28TH	279.59	12.9	47.4	853	853	15.1	55.5	119.0	312.4	-12.6	5.4	-2.6
29TH	290.26	13.5	47.5	853	853	15.9	55.6	106.2	265.0	-9.6	4.2	-2.3
30TH	300.93	14.2	47.6	853	853	16.6	55.8	92.6	217.6	-7.0	3.1	-2.0
31ST	311.59	14.9	47.0	853	853	17.4	55.1	78.4	169.9	-4.9	2.2	-1.7
32ND	322.26	15.4	41.5	853	853	18.1	48.6	63.5	122.9	-3.4	1.4	-1.5
33RD	332.93	18.2	9.6	767	853	23.8	11.3	48.1	81.5	-2.3	.8	-1.2
34TH	343.59	14.5	16.5	592	853	24.5	19.3	29.9	71.9	-1.5	.4	-1.0
35TH	354.26	15.0	45.7	678	1820	22.2	25.1	15.4	55.4	-.8	.2	-.7
PARA	377.61	.4	9.8	49	639	7.5	15.3	.4	9.8	-.0	.0	-.1

TABLE 7. SHEAR AND MOMENT DIAGRAMS : 1221 BRICKELL BUILDING
WIND DIRECTION 140 CONFIGURATION A REFERENCE PRESSURE 48.0 PSF GUST FACTOR 1.32

FLOOR	HEIGHT FT	X-FORCE KIPS	Y-FORCE KIPS	X-AREA SQ FT	Y-AREA SQ FT	X-PRESS PSF	Y-PRESS PSF	X-SHEAR KIPS	Y-SHEAR KIPS	X-MOMENT 1000-FT-KIPS	Y-MOMENT 1000-FT-KIPS	Z-MOMENT 1000-FT-KIPS
1ST	0.00	54.2	22.6	1598	1033	33.9	21.8	1243.8	1215.9	-248.6	197.9	-23.3
2ND	12.92	42.4	14.4	1320	853	32.1	16.8	1189.6	1193.4	-233.0	182.1	-21.7
3RD	23.58	44.4	8.9	1391	853	31.9	10.4	1147.2	1179.0	-220.4	169.7	-20.3
4TH	34.25	47.3	13.5	1461	853	32.4	15.9	1102.9	1170.1	-207.8	157.7	-19.1
5TH	44.92	47.7	20.0	1461	853	32.7	23.5	1055.5	1156.6	-195.4	146.2	-17.9
6TH	55.58	47.9	22.5	1461	853	32.8	26.4	1007.8	1136.6	-183.2	135.2	-16.7
7TH	66.25	47.7	25.0	1461	853	32.7	29.3	959.9	1114.0	-171.2	124.7	-15.6
8TH	76.92	48.0	27.4	1461	853	32.8	32.2	912.2	1089.1	-159.4	114.7	-14.3
9TH	87.59	48.2	29.9	1461	853	33.0	35.1	864.2	1061.6	-148.0	105.2	-13.1
10TH	98.25	48.5	32.4	1461	853	33.2	37.9	815.9	1031.7	-136.8	96.2	-11.8
11TH	108.92	48.8	34.6	1461	853	33.4	40.5	767.4	999.3	-126.0	87.8	-10.4
12TH	119.59	49.0	35.8	1461	853	33.5	41.9	718.7	964.7	-115.5	79.9	-9.1
14TH	130.25	47.6	39.2	1461	853	32.6	45.9	669.7	929.0	-105.4	72.5	-7.7
15TH	140.92	43.6	46.7	1396	853	31.3	54.7	622.0	889.8	-95.7	65.6	-6.3
16TH	151.59	39.9	46.0	1264	853	31.6	53.9	578.4	843.0	-86.5	59.2	-5.3
17TH	162.26	36.3	44.7	1131	853	32.1	52.3	538.5	797.0	-77.7	53.2	-4.5
18TH	172.92	31.3	44.8	999	853	31.3	52.5	502.2	752.4	-69.4	47.7	-3.9
19TH	183.59	27.4	43.5	853	853	32.2	51.0	470.9	707.5	-61.7	42.5	-3.5
20TH	194.26	28.4	42.1	853	853	33.3	49.3	443.5	664.0	-54.3	37.6	-3.3
21ST	204.92	28.1	42.8	853	853	33.0	50.2	415.1	621.9	-47.5	33.0	-3.1
22ND	215.59	27.9	43.8	853	853	32.7	51.4	387.0	579.1	-41.1	28.7	-2.9
23RD	226.26	27.6	44.8	853	853	32.4	52.5	359.1	535.3	-35.1	24.8	-2.7
24TH	236.92	27.4	45.9	853	853	32.1	53.7	331.5	490.4	-29.7	21.1	-2.5
25TH	247.59	27.2	46.3	853	853	31.9	54.3	304.1	444.6	-24.7	17.7	-2.4
26TH	258.26	27.6	46.0	853	853	32.3	53.9	276.9	398.3	-20.2	14.6	-2.2
27TH	268.92	28.0	45.7	853	853	32.8	53.6	249.3	352.2	-16.2	11.8	-2.1
28TH	279.59	28.3	45.5	853	853	33.2	53.3	221.3	306.5	-12.7	9.3	-2.0
29TH	290.26	28.7	45.2	853	853	33.7	52.9	193.0	261.0	-9.6	7.1	-1.8
30TH	300.93	29.1	44.9	853	853	34.1	52.6	164.3	215.9	-7.1	5.2	-1.7
31ST	311.59	29.5	44.2	853	853	34.6	51.8	135.1	171.0	-5.0	3.6	-1.6
32ND	322.26	30.6	40.5	853	853	35.9	47.4	105.7	126.8	-3.4	2.3	-1.6
33RD	332.93	28.6	13.5	767	853	37.3	15.8	75.1	86.3	-2.3	1.3	-1.5
34TH	343.59	22.1	18.1	592	853	37.3	21.2	46.4	72.8	-1.5	.7	-1.3
35TH	354.26	23.4	44.5	678	1820	34.6	24.5	24.4	54.7	-.8	.3	-.9
PARA	377.01	.9	10.2	49	639	19.3	15.9	.9	10.2	-.0	.0	-.1

TABLE 7. SHEAR AND MOMENT DIAGRAMS : 1221 BRICKELL BUILDING
WIND DIRECTION 150 CONFIGURATION A REFERENCE PRESSURE 48.0 PSF GUST FACTOR 1.32

FLOOR	HEIGHT FT	X-FORCE KIPS	Y-FORCE KIPS	X-AREA SQ FT	Y-AREA SQ FT	X-PRESS PSF	Y-PRESS PSF	X-SHEAR KIPS	Y-SHEAR KIPS	X-MOMENT 1000-FT-KIPS	Y-MOMENT 1000-FT-KIPS	Z-MOMENT 1000-FT-KIPS
1ST	0.00	59.2	10.7	1598	1033	37.1	10.4	1521.0	970.5	-211.5	253.2	-21.5
2ND	12.92	47.3	8.2	1320	853	35.8	9.6	1461.8	959.8	-199.0	233.9	-19.7
3RD	23.58	49.9	4.2	1391	853	35.8	5.0	1414.5	951.6	-188.8	218.6	-18.3
4TH	34.25	53.3	8.9	1461	853	36.5	10.5	1364.6	947.3	-178.7	203.8	-17.1
5TH	44.92	53.6	12.9	1461	853	36.7	15.1	1311.3	938.4	-168.7	189.5	-15.9
6TH	55.58	53.8	14.6	1461	853	36.8	17.2	1257.8	925.5	-158.7	175.8	-14.8
7TH	66.25	54.1	15.9	1461	853	37.0	18.6	1204.0	910.8	-148.9	162.7	-13.6
8TH	76.92	54.7	17.1	1461	853	37.5	20.0	1149.9	895.0	-139.3	150.1	-12.5
9TH	87.59	55.4	18.2	1461	853	37.9	21.4	1095.2	877.9	-129.8	138.1	-11.2
10TH	98.25	56.1	19.4	1461	853	38.4	22.7	1039.8	859.7	-120.6	126.8	-10.0
11TH	108.92	56.8	20.5	1461	853	38.8	24.0	983.7	840.3	-111.5	116.0	-8.6
12TH	119.59	57.4	21.8	1461	853	39.3	25.6	926.9	819.7	-102.7	105.8	-7.3
14TH	130.25	56.4	26.0	1461	853	38.6	30.5	869.5	797.9	-94.0	96.2	-5.9
15TH	140.92	52.4	35.7	1396	853	37.6	41.8	813.1	771.9	-85.7	87.2	-4.5
16TH	151.59	48.5	36.1	1264	853	38.4	42.3	760.6	736.2	-77.6	78.8	-3.5
17TH	162.26	44.9	36.0	1131	853	39.7	42.2	712.1	700.1	-69.9	71.0	-2.7
18TH	172.92	39.2	38.1	999	853	39.3	44.6	667.3	664.1	-62.7	63.6	-2.2
19TH	183.59	35.5	36.7	853	853	41.6	43.0	628.0	626.0	-55.8	56.7	-1.9
20TH	194.26	36.6	35.2	853	853	42.9	41.3	592.6	589.3	-49.3	50.2	-1.8
21ST	204.92	36.6	36.3	853	853	42.9	42.6	556.0	554.1	-43.2	44.1	-1.7
22ND	215.59	36.7	37.5	853	853	43.0	43.9	519.3	517.7	-37.5	38.3	-1.6
23RD	226.26	36.7	38.6	853	853	43.0	45.2	482.7	480.3	-32.2	33.0	-1.5
24TH	236.92	36.8	39.8	853	853	43.1	46.6	445.9	441.7	-27.3	28.0	-1.5
25TH	247.59	36.9	40.3	853	853	43.3	47.2	409.2	401.9	-22.8	23.5	-1.4
26TH	258.26	37.6	40.2	853	853	44.1	47.1	372.3	361.6	-18.7	19.3	-1.4
27TH	268.92	38.3	40.2	853	853	44.9	47.1	334.7	321.4	-15.0	15.5	-1.4
28TH	279.59	39.0	40.1	853	853	45.7	47.0	296.4	281.2	-11.8	12.2	-1.4
29TH	290.26	39.7	40.0	853	853	46.5	46.9	257.4	241.2	-9.0	9.2	-1.5
30TH	300.93	40.4	39.9	853	853	47.3	46.8	217.7	201.1	-6.7	6.7	-1.5
31ST	311.59	41.1	39.6	853	853	48.1	46.4	177.3	161.2	-4.7	4.6	-1.5
32ND	322.26	41.2	35.9	853	853	48.3	42.1	136.3	121.6	-3.2	2.9	-1.5
33RD	332.93	36.2	18.3	767	853	47.2	21.4	95.0	85.7	-2.1	1.7	-1.6
34TH	343.59	27.7	19.1	592	853	46.7	22.3	58.9	67.4	-1.3	.9	-1.3
35TH	354.26	29.8	38.7	678	1820	43.9	21.3	31.2	48.4	-.7	.4	-.9
PARA	377.01	1.4	9.7	49	639	29.4	15.1	1.4	9.7	-.0	.0	-.1

TABLE 7. SHEAR AND MOMENT DIAGRAMS : 1221 BRICKELL BUILDING
WIND DIRECTION 160 CONFIGURATION A REFERENCE PRESSURE 48.0 PSF GUST FACTOR 1.32

FLOOR	HEIGHT FT	X-FORCE KIPS	Y-FORCE KIPS	X-AREA SQ FT	Y-AREA SQ FT	X-PRESS PSF	Y-PRESS PSF	X-SHEAR KIPS	Y-SHEAR KIPS	X-MOMENT	Y-MOMENT	Z-MOMENT
										1000-FT-KIPS		
1ST	0.00	58.4	9.7	1598	1033	36.5	9.4	1602.9	729.5	-154.5	272.5	-19.6
2ND	12.92	46.6	8.1	1320	853	35.3	9.5	1544.5	719.8	-145.2	252.2	-17.7
3RD	23.58	49.5	4.9	1391	853	35.5	5.7	1497.9	711.7	-137.6	236.0	-16.3
4TH	34.25	53.0	9.3	1461	853	36.3	10.9	1448.5	706.8	-130.0	220.2	-15.0
5TH	44.92	53.9	11.8	1461	853	36.9	13.8	1395.5	697.5	-122.5	205.1	-13.8
6TH	55.58	54.6	12.9	1461	853	37.4	15.1	1341.6	685.7	-115.1	190.5	-12.6
7TH	66.25	55.2	13.5	1461	853	37.7	15.8	1286.9	672.8	-107.9	176.5	-11.5
8TH	76.92	55.9	14.1	1461	853	38.2	16.6	1231.8	659.3	-100.8	163.0	-10.3
9TH	87.59	56.6	14.7	1461	853	38.7	17.3	1175.9	645.2	-93.8	150.2	-9.0
10TH	98.25	57.3	15.3	1461	853	39.2	18.0	1119.3	630.5	-87.0	137.9	-7.7
11TH	108.92	58.0	15.8	1461	853	39.7	18.6	1062.1	615.1	-80.4	126.3	-6.4
12TH	119.59	58.7	16.3	1461	853	40.2	19.1	1004.1	599.3	-73.9	115.3	-5.0
14TH	130.25	57.9	19.3	1461	853	39.6	22.6	945.4	583.0	-67.6	104.9	-3.6
15TH	140.92	55.4	25.9	1396	853	39.7	30.3	887.5	563.7	-61.5	95.1	-2.3
16TH	151.59	51.4	27.3	1264	853	40.7	31.9	832.1	537.8	-55.6	85.9	-1.2
17TH	162.26	48.0	27.8	1131	853	42.4	32.6	780.6	510.6	-50.0	77.3	-.4
18TH	172.92	42.2	29.4	999	853	42.3	34.4	732.6	482.7	-44.7	69.3	.1
19TH	183.59	38.2	28.5	853	853	44.7	33.4	690.4	453.4	-39.7	61.7	.3
20TH	194.26	39.8	26.8	853	853	46.6	31.5	652.3	424.9	-35.0	54.5	.4
21ST	204.92	40.3	27.6	853	853	47.2	32.3	612.5	398.0	-30.6	47.8	.4
22ND	215.59	40.9	28.2	853	853	47.9	33.0	572.2	370.5	-26.5	41.4	.4
23RD	226.26	41.4	28.8	853	853	48.5	33.7	531.3	342.3	-22.7	35.6	.4
24TH	236.92	42.0	29.4	853	853	49.2	34.5	489.9	313.5	-19.2	30.1	.3
25TH	247.59	42.5	29.5	853	853	49.8	34.5	447.9	284.1	-16.1	25.1	.2
26TH	258.26	42.9	29.0	853	853	50.3	34.0	405.5	254.6	-13.2	20.6	.1
27TH	268.92	43.4	28.5	853	853	50.8	33.4	362.5	225.6	-10.6	16.5	.0
28TH	279.59	43.8	28.0	853	853	51.3	32.8	319.2	197.1	-8.4	12.8	-.1
29TH	290.26	44.3	27.5	853	853	51.9	32.3	275.3	169.1	-6.4	9.7	-.3
30TH	300.93	44.7	27.0	853	853	52.4	31.7	231.1	141.6	-4.8	7.0	-.4
31ST	311.59	45.2	26.7	853	853	52.9	31.3	186.4	114.5	-3.4	4.7	-.6
32ND	322.26	43.9	25.5	853	853	51.4	29.9	141.2	87.8	-2.3	3.0	-.8
33RD	332.93	37.3	14.7	767	853	48.7	17.2	97.3	62.3	-1.5	1.7	-.9
34TH	343.59	28.2	14.2	592	853	47.7	16.6	60.0	47.6	-.9	.9	-.8
35TH	354.26	30.2	26.6	678	1820	44.5	14.6	31.8	33.4	-.5	.4	-.6
PARA	377.01	1.6	6.9	49	639	32.2	10.7	1.6	6.9	-.0	0	-.0

TABLE 7. SHEAR AND MOMENT DIAGRAMS : 1221 BRICKELL BUILDING
WIND DIRECTION 170 CONFIGURATION A REFERENCE PRESSURE 48.0 PSF GUST FACTOR 1.32

FLOOR	HEIGHT FT	X-FORCE KIPS	Y-FORCE KIPS	X-AREA SQ FT	Y-AREA SQ FT	X-PRESS PSF	Y-PRESS PSF	X-SHEAR KIPS	Y-SHEAR KIPS	X-MOMENT 1000-FT-KIPS	Y-MOMENT 1000-FT-KIPS	Z-MOMENT 1000-FT-KIPS
1ST	0.00	49.3	13.1	1598	1033	30.9	12.7	1540.9	513.3	-91.7	269.9	-12.6
2ND	12.92	39.6	11.3	1320	853	30.0	13.2	1491.6	500.3	-85.1	250.3	-11.3
3RD	23.58	42.4	9.1	1391	853	30.5	10.6	1451.9	489.0	-79.8	234.6	-10.2
4TH	34.25	46.1	11.9	1461	853	31.5	13.9	1409.5	479.9	-74.7	219.4	-9.3
5TH	44.92	47.1	13.8	1461	853	32.2	16.2	1363.5	468.0	-69.6	204.6	-8.4
6TH	55.58	48.1	14.4	1461	853	32.9	16.8	1316.4	454.2	-64.7	190.3	-7.6
7TH	66.25	49.2	14.3	1461	853	33.7	16.8	1268.3	439.9	-59.9	176.5	-6.7
8TH	76.92	50.7	14.2	1461	853	34.7	16.7	1219.1	425.5	-55.3	163.2	-5.9
9TH	87.59	52.2	14.1	1461	853	35.7	16.5	1168.4	411.3	-50.9	150.5	-5.0
10TH	98.25	53.7	14.0	1461	853	36.8	16.4	1116.1	397.2	-46.5	138.3	-4.0
11TH	108.92	55.2	13.8	1461	853	37.8	16.1	1062.4	383.2	-42.4	126.7	-2.9
12TH	119.59	56.7	13.7	1461	853	38.8	16.0	1007.2	369.5	-38.4	115.7	-1.8
14TH	130.25	56.3	16.7	1461	853	38.5	19.5	950.4	355.8	-34.5	105.2	-.7
15TH	140.92	54.4	21.6	1396	853	39.0	25.3	894.2	339.1	-30.8	95.4	.4
16TH	151.59	51.3	22.0	1264	853	40.6	25.7	839.8	317.5	-27.3	86.1	1.3
17TH	162.26	49.0	21.7	1131	853	43.3	25.5	788.5	295.6	-24.0	77.5	2.0
18TH	172.92	43.6	22.9	999	853	43.7	26.9	739.5	273.9	-21.0	69.3	2.4
19TH	183.59	39.8	22.0	853	853	46.6	25.8	695.9	250.9	-18.2	61.7	2.6
20TH	194.26	41.1	19.6	853	853	48.2	23.0	656.1	228.9	-15.6	54.4	2.5
21ST	204.92	41.5	19.4	853	853	48.6	22.7	615.0	209.3	-13.3	47.7	2.4
22ND	215.59	41.8	19.1	853	853	49.0	22.4	573.5	189.9	-11.2	41.3	2.3
23RD	226.26	42.1	18.8	853	853	49.4	22.0	531.8	170.7	-9.2	35.4	2.2
24TH	236.92	42.5	18.5	853	853	49.8	21.7	489.6	151.9	-7.5	30.0	2.0
25TH	247.59	42.8	18.0	853	853	50.2	21.1	447.2	133.4	-6.0	25.0	1.8
26TH	258.26	43.2	17.3	853	853	50.6	20.3	404.4	115.4	-4.7	20.4	1.6
27TH	268.92	43.6	16.6	853	853	51.1	19.4	361.2	98.1	-3.5	16.4	1.3
28TH	279.59	44.0	15.9	853	853	51.5	18.6	317.6	81.5	-2.6	12.7	1.1
29TH	290.26	44.3	15.2	853	853	52.0	17.8	273.7	65.6	-1.8	9.6	.8
30TH	300.93	44.7	14.5	853	853	52.4	17.0	229.3	50.5	-1.2	6.9	.6
31ST	311.59	45.1	13.9	853	853	52.9	16.3	184.6	36.0	-.7	4.7	.3
32ND	322.26	43.1	12.2	853	853	50.5	14.3	139.5	22.1	-.4	3.0	-.0
33RD	332.93	36.4	2.6	767	853	47.5	3.0	96.4	9.8	-.2	1.7	-.3
34TH	343.59	28.2	2.4	592	853	47.6	2.8	60.0	7.3	-.1	.9	-.4
35TH	354.26	30.3	3.9	678	1820	44.7	2.1	31.9	4.8	-.1	.4	-.3
PARA	377.01	1.6	1.0	49	639	32.3	1.5	1.6	1.0	-.0	.0	.0

TABLE 7. SHEAR AND MOMENT DIAGRAMS : 1221 BRICKELL BUILDING
WIND DIRECTION 180 CONFIGURATION A REFERENCE PRESSURE 48.0 PSF GUST FACTOR 1.32

FLOOR	HEIGHT FT	X-FORCE KIPS	Y-FORCE KIPS	X-AREA SQ FT	Y-AREA SQ FT	X-PRESS PSF	Y-PRESS PSF	X-SHEAR KIPS	Y-SHEAR KIPS	X-MOMENT 1000-FT-KIPS	Y-MOMENT 1000-FT-KIPS	Z-MOMENT 1000-FT-KIPS
1ST	0.00	36.8	2.9	1598	1033	23.0	2.8	1290.3	-115.9	27.6	244.0	-7.0
2ND	12.92	27.9	1.2	1320	853	21.1	1.4	1253.5	-118.8	26.1	227.6	-5.8
3RD	23.58	30.0	1.2	1391	853	21.6	1.4	1225.6	-120.0	24.8	214.4	-5.0
4TH	34.25	33.1	1.5	1461	853	22.7	1.7	1195.6	-121.3	23.6	201.5	-4.2
5TH	44.92	33.6	-1.7	1461	853	23.0	-2.0	1162.4	-122.7	22.3	188.9	-3.6
6TH	55.58	33.7	-2.2	1461	853	23.0	-2.6	1128.8	-121.0	21.0	176.7	-3.1
7TH	66.25	34.0	-3.0	1461	853	23.3	-3.5	1095.2	-118.7	19.7	164.8	-2.6
8TH	76.92	35.5	-3.8	1461	853	24.3	-4.4	1061.1	-115.8	18.4	153.3	-2.1
9TH	87.59	37.0	-4.5	1461	853	25.3	-5.3	1025.6	-112.0	17.2	142.2	-1.5
10TH	98.25	38.5	-5.3	1461	853	26.3	-6.2	988.6	-107.5	16.0	131.4	-.9
11TH	108.92	40.0	-6.0	1461	853	27.4	-7.1	950.1	-102.2	14.9	121.1	-.2
12TH	119.59	41.5	-6.2	1461	853	28.4	-7.3	910.2	-96.1	13.9	111.2	.5
14TH	130.25	43.6	-5.3	1461	853	29.8	-6.2	868.7	-89.9	12.9	101.7	1.2
15TH	140.92	41.8	-6.1	1396	853	30.0	-7.2	825.1	-84.6	11.9	92.6	2.1
16TH	151.59	40.9	-4.4	1264	853	32.4	-5.2	783.3	-78.5	11.1	84.1	2.7
17TH	162.26	40.0	-1.7	1131	853	35.4	-2.0	742.4	-74.1	10.3	75.9	3.2
18TH	172.92	37.6	1.8	999	853	37.7	2.1	702.4	-72.3	9.5	68.2	3.5
19TH	183.59	33.7	-.3	853	853	39.5	-.4	664.8	-74.1	8.7	60.9	3.7
20TH	194.26	35.3	-.9	853	853	41.4	-1.0	631.1	-73.8	7.9	54.0	3.5
21ST	204.92	36.3	-1.2	853	853	42.5	-1.4	595.8	-72.9	7.1	47.5	3.3
22ND	215.59	37.2	-1.9	853	853	43.6	-2.2	559.5	-71.7	6.4	41.3	3.1
23RD	226.26	38.2	-2.5	853	853	44.8	-3.0	522.3	-69.8	5.6	35.5	2.9
24TH	236.92	39.2	-3.2	853	853	45.9	-3.7	484.1	-67.3	4.9	30.2	2.6
25TH	247.59	40.1	-3.9	853	853	47.0	-4.6	444.9	-64.1	4.2	25.2	2.4
26TH	258.26	41.2	-4.6	853	853	48.3	-5.4	404.7	-60.2	3.5	20.7	2.1
27TH	268.92	42.3	-5.4	853	853	49.5	-6.3	363.5	-55.5	2.9	16.6	1.8
28TH	279.59	43.3	-6.1	853	853	50.8	-7.1	321.3	-50.2	2.3	12.9	1.5
29TH	290.26	44.4	-6.8	853	853	52.0	-7.9	277.9	-44.1	1.8	9.7	1.1
30TH	300.93	45.5	-7.5	853	853	53.3	-8.8	233.5	-37.3	1.4	7.0	.8
31ST	311.59	46.5	-6.9	853	853	54.5	-8.1	188.0	-29.8	1.0	4.8	.5
32ND	322.26	43.6	-2.0	853	853	51.1	-2.4	141.5	-22.9	.7	3.0	.1
33RD	332.93	37.0	-4.0	767	853	48.2	-4.7	97.9	-20.9	.5	1.7	-.1
34TH	343.59	28.6	-4.7	592	853	48.3	-5.5	60.9	-16.9	.3	.9	-.2
35TH	354.26	30.5	-10.9	678	1820	45.1	-6.0	32.3	-12.2	.2	.4	-.1
PARA	377.01	1.8	-1.3	49	639	36.4	-2.0	1.8	-1.3	.0	.0	.1

TABLE 7. SHEAR AND MOMENT DIAGRAMS : 1221 BRICKELL BUILDING
WIND DIRECTION 190 CONFIGURATION A REFERENCE PRESSURE 48.0 PSF GUST FACTOR 1.32

FLOOR	HEIGHT FT	X-FORCE KIPS	Y-FORCE KIPS	X-AREA SQ FT	Y-AREA SQ FT	X-PRESS PSF	Y-PRESS PSF	X-SHEAR KIPS	Y-SHEAR KIPS	X-MOMENT	Y-MOMENT 1000-FT-KIPS	Z-MOMENT
1ST	0.00	41.7	-6.4	1598	1033	26.1	-6.2	1327.6	-176.0	26.1	255.4	-15.8
2ND	12.92	30.0	-3.9	1320	853	22.8	-4.6	1285.9	-169.6	23.8	238.6	-14.3
3RD	23.58	30.6	-3.2	1391	853	22.0	-3.7	1255.9	-165.7	22.1	225.0	-13.2
4TH	34.25	32.4	-2.6	1461	853	22.2	-3.0	1225.2	-162.5	20.3	211.8	-12.2
5TH	44.92	31.8	-5.1	1461	853	21.8	-6.0	1192.8	-159.9	18.6	198.9	-11.4
6TH	55.58	30.9	-6.1	1461	853	21.1	-7.1	1161.0	-154.8	16.9	186.3	-10.7
7TH	66.25	31.3	-7.1	1461	853	21.4	-8.4	1130.1	-148.7	15.3	174.1	-10.1
8TH	76.92	33.2	-8.2	1461	853	22.7	-9.6	1098.8	-141.5	13.7	162.2	-9.4
9TH	87.59	35.1	-9.2	1461	853	24.0	-10.8	1065.6	-133.4	12.3	150.7	-8.7
10TH	98.25	37.0	-10.3	1461	853	25.3	-12.0	1030.4	-124.1	10.9	139.5	-7.9
11TH	108.92	38.9	-11.2	1461	853	26.7	-13.1	993.4	-113.9	9.6	128.7	-7.0
12TH	119.59	40.9	-11.3	1461	853	28.0	-13.3	954.5	-102.7	8.5	118.3	-6.1
14TH	130.25	43.8	-11.6	1461	853	30.0	-13.5	913.6	-91.4	7.4	108.3	-5.1
15TH	140.92	43.0	-12.2	1396	853	30.8	-14.2	869.8	-79.8	6.5	98.8	-3.9
16TH	151.59	41.7	-11.1	1264	853	33.0	-13.1	826.8	-67.7	5.7	89.8	-3.0
17TH	162.26	40.9	-9.3	1131	853	36.2	-10.9	785.1	-56.5	5.1	81.2	-2.2
18TH	172.92	38.6	-5.1	999	853	38.7	-6.0	744.1	-47.3	4.5	73.0	-1.7
19TH	183.59	34.5	-3.3	853	853	40.4	-3.9	705.5	-42.2	4.0	65.3	-1.3
20TH	194.26	36.5	-2.8	853	853	42.8	-3.3	671.1	-38.9	3.6	58.0	-1.2
21ST	204.92	37.7	-2.2	853	853	44.2	-2.5	634.5	-36.1	3.2	51.0	-1.1
22ND	215.59	38.8	-2.1	853	853	45.5	-2.4	596.8	-33.9	2.8	44.4	-1.0
23RD	226.26	40.0	-2.0	853	853	46.8	-2.3	558.0	-31.9	2.5	38.3	-1.0
24TH	236.92	41.1	-1.9	853	853	48.2	-2.2	518.0	-29.9	2.2	32.5	-.9
25TH	247.59	42.3	-2.0	853	853	49.6	-2.3	476.9	-28.1	1.9	27.2	-.9
26TH	258.26	43.6	-2.2	853	853	51.1	-2.6	434.6	-26.1	1.6	22.4	-.9
27TH	268.92	44.9	-2.4	853	853	52.6	-2.8	391.0	-23.9	1.3	18.0	-1.0
28TH	279.59	46.2	-2.6	853	853	54.1	-3.1	346.1	-21.4	1.1	14.0	-1.0
29TH	290.26	47.5	-2.8	853	853	55.6	-3.3	299.9	-18.8	.8	10.6	-1.0
30TH	300.93	48.8	-3.0	853	853	57.2	-3.6	252.5	-16.0	.7	7.6	-1.1
31ST	311.59	50.1	-2.6	853	853	58.7	-3.1	203.7	-13.0	.5	5.2	-1.2
32ND	322.26	46.8	-.6	853	853	54.9	-.7	153.6	-10.3	.4	3.3	-1.2
33RD	332.93	40.0	-1.3	767	853	52.1	-1.6	106.8	-9.7	.3	1.9	-1.2
34TH	343.59	31.4	-1.9	592	853	53.1	-2.2	66.8	-8.4	.2	1.0	-1.1
35TH	354.26	33.3	-5.3	678	1820	49.2	-2.9	35.3	-6.5	.1	.4	-.7
PARA	377.01	2.0	-1.2	49	639	41.0	-1.9	2.0	-1.2	.0	.0	.0

TABLE 7. SHEAR AND MOMENT DIAGRAMS : 1221 BRICKELL BUILDING
WIND DIRECTION 200 CONFIGURATION A REFERENCE PRESSURE 48.0 PSF GUST FACTOR 1.32

FLOOR	HEIGHT FT	X-FORCE KIPS	Y-FORCE KIPS	X-AREA SQ FT	Y-AREA SQ FT	X-PRESS PSF	Y-PRESS PSF	X-SHEAR KIPS	Y-SHEAR KIPS	X-MOMENT	Y-MOMENT 1000-FT-KIPS	Z-MOMENT
1ST	0.00	57.3	-10.5	1598	1033	35.8	-10.2	1658.9	-140.4	-5.2	305.4	-29.4
2ND	12.92	40.6	-7.7	1320	853	30.8	-9.0	1601.6	-129.9	-6.9	284.3	-27.5
3RD	23.58	41.4	-6.2	1391	853	29.7	-7.3	1560.9	-122.2	-8.3	267.5	-26.1
4TH	34.25	43.5	-6.4	1461	853	29.8	-7.5	1519.6	-116.0	-9.5	251.0	-24.8
5TH	44.92	42.5	-12.0	1461	853	29.1	-14.1	1476.0	-109.5	-10.7	235.1	-23.7
6TH	55.58	41.5	-13.0	1461	853	28.4	-15.2	1433.5	-97.5	-11.8	219.6	-22.7
7TH	66.25	42.8	-14.4	1461	853	29.3	-16.9	1392.0	-84.6	-12.8	204.5	-21.8
8TH	76.92	45.2	-15.9	1461	853	30.9	-18.7	1349.2	-70.2	-13.6	189.9	-20.8
9TH	87.59	47.7	-17.4	1461	853	32.6	-20.4	1304.0	-54.2	-14.3	175.7	-19.7
10TH	98.25	50.1	-19.0	1461	853	34.3	-22.2	1256.3	-36.8	-14.8	162.1	-18.5
11TH	108.92	52.6	-20.1	1461	853	36.0	-23.6	1206.2	-17.9	-15.1	148.9	-17.1
12TH	119.59	55.1	-19.4	1461	853	37.7	-22.8	1153.6	2.3	-15.2	136.3	-15.7
14TH	130.25	58.9	-18.3	1461	853	40.3	-21.5	1098.5	21.7	-15.0	124.3	-14.1
15TH	140.92	58.0	-17.8	1396	853	41.5	-20.9	1039.6	40.1	-14.7	112.9	-12.3
16TH	151.59	55.6	-15.2	1264	853	44.0	-17.8	981.6	57.9	-14.2	102.1	-10.8
17TH	162.26	53.6	-13.1	1131	853	47.4	-15.4	926.0	73.1	-13.5	92.0	-9.5
18TH	172.92	50.0	-8.4	999	853	50.1	-9.8	872.4	86.2	-12.6	82.4	-8.6
19TH	183.59	45.3	-3.9	853	853	53.1	-4.6	822.4	94.6	-11.7	73.3	-7.9
20TH	194.26	47.4	-2.8	853	853	55.5	-3.3	777.1	98.5	-10.6	64.8	-7.5
21ST	204.92	48.1	.2	853	853	56.4	.3	729.7	101.3	-9.6	56.8	-7.1
22ND	215.59	48.8	2.3	853	853	57.2	2.8	681.6	101.1	-8.5	49.2	-6.7
23RD	226.26	49.5	4.5	853	853	58.1	5.2	632.8	98.7	-7.4	42.2	-6.3
24TH	236.92	50.3	6.6	853	853	58.9	7.7	583.2	94.3	-6.4	35.7	-5.9
25TH	247.59	50.9	7.6	853	853	59.7	8.9	532.9	87.7	-5.4	29.8	-5.5
26TH	258.26	51.4	7.6	853	853	60.3	8.9	482.0	80.1	-4.5	24.4	-5.2
27TH	268.92	51.9	7.5	853	853	60.9	8.8	430.5	72.5	-3.7	19.5	-4.9
28TH	279.59	52.4	7.5	853	853	61.4	8.8	378.6	65.0	-3.0	15.2	-4.6
29TH	290.26	52.9	7.5	853	853	62.0	8.8	326.2	57.5	-2.3	11.4	-4.3
30TH	300.93	53.4	7.4	853	853	62.6	8.7	273.2	50.0	-1.8	8.2	-4.0
31ST	311.59	53.9	7.6	853	853	63.2	9.0	219.8	42.6	-1.3	5.6	-3.8
32ND	322.26	50.3	8.8	853	853	58.9	10.4	165.9	34.9	-.9	3.6	-3.5
33RD	332.93	43.4	7.7	767	853	56.5	9.0	115.6	26.1	-.5	2.1	-3.1
34TH	343.59	34.3	6.9	592	853	57.9	8.1	72.3	18.4	-.3	1.1	-2.6
35TH	354.26	35.8	10.9	678	1820	52.8	6.0	38.0	11.5	-.1	.5	-1.8
PARA	377.01	2.2	.5	49	639	44.3	.9	2.2	.5	-.0	.0	-.2

TABLE 7. SHEAR AND MOMENT DIAGRAMS : 1221 BRICKELL BUILDING
WIND DIRECTION 210 CONFIGURATION A REFERENCE PRESSURE 48.0 PSF GUST FACTOR 1.32

FLOOR	HEIGHT FT	X-FORCE KIPS	Y-FORCE KIPS	X-AREA SQ FT	Y-AREA SQ FT	X-PRESS PSF	Y-PRESS PSF	X-SHEAR KIPS	Y-SHEAR KIPS	X-MOMENT	Y-MOMENT	Z-MOMENT
										1000-FT-KIPS		
1ST	0.00	61.5	-20.3	1598	1033	38.5	-19.6	1709.0	-511.6	71.6	305.0	-35.4
2ND	12.92	43.4	-15.6	1320	853	32.9	-18.2	1647.5	-491.3	65.1	283.3	-33.1
3RD	23.58	44.5	-14.8	1391	853	32.0	-17.3	1604.1	-475.7	60.0	266.0	-31.5
4TH	34.25	47.3	-15.5	1461	853	32.4	-18.1	1559.6	-460.9	55.0	249.1	-29.9
5TH	44.92	47.5	-22.1	1461	853	32.5	-25.9	1512.2	-445.5	50.1	232.8	-28.5
6TH	55.58	47.5	-23.2	1461	853	32.5	-27.1	1464.7	-423.4	45.5	216.9	-27.1
7TH	66.25	48.4	-24.2	1461	853	33.1	-28.3	1417.2	-400.3	41.1	201.5	-25.8
8TH	76.92	50.9	-25.2	1461	853	34.9	-29.6	1368.8	-376.1	37.0	186.6	-24.4
9TH	87.59	53.5	-26.3	1461	853	36.6	-30.8	1317.8	-350.8	33.1	172.3	-22.9
10TH	98.25	56.0	-27.3	1461	853	38.3	-32.0	1264.4	-324.6	29.5	158.5	-21.2
11TH	108.92	58.5	-27.9	1461	853	40.0	-32.7	1208.4	-297.3	26.2	145.4	-19.4
12TH	119.59	61.0	-26.7	1461	853	41.7	-31.2	1149.9	-269.4	23.2	132.8	-17.5
14TH	130.25	65.1	-24.9	1461	853	44.6	-29.2	1088.9	-242.7	20.4	120.8	-15.5
15TH	140.92	63.5	-24.7	1396	853	45.5	-28.9	1023.8	-217.8	18.0	109.6	-13.3
16TH	151.59	59.7	-22.7	1264	853	47.3	-26.6	960.3	-193.0	15.8	99.0	-11.4
17TH	162.26	55.7	-20.8	1131	853	49.3	-24.4	900.5	-170.3	13.8	89.1	-9.9
18TH	172.92	50.5	-18.4	999	853	50.6	-21.6	844.8	-149.5	12.1	79.8	-8.9
19TH	183.59	44.5	-15.6	853	853	52.2	-18.2	794.3	-131.1	10.6	71.0	-8.2
20TH	194.26	46.2	-13.4	853	853	54.1	-15.7	749.8	-115.6	9.3	62.8	-7.9
21ST	204.92	46.6	-11.5	853	853	54.7	-13.5	703.6	-102.1	8.2	55.0	-7.5
22ND	215.59	47.1	-10.2	853	853	55.2	-11.9	657.0	-90.7	7.1	47.8	-7.1
23RD	226.26	47.6	-8.9	853	853	55.8	-10.4	609.9	-80.5	6.2	41.0	-6.7
24TH	236.92	48.1	-7.6	853	853	56.3	-8.9	562.3	-71.6	5.4	34.8	-6.3
25TH	247.59	48.5	-6.5	853	853	56.9	-7.6	514.2	-64.0	4.7	29.0	-5.9
26TH	258.26	49.1	-5.8	853	853	57.5	-6.7	465.7	-57.5	4.0	23.8	-5.5
27TH	268.92	49.6	-5.0	853	853	58.1	-5.9	416.6	-51.8	3.5	19.1	-5.1
28TH	279.59	50.1	-4.3	853	853	58.7	-5.0	367.0	-46.7	2.9	14.9	-4.7
29TH	290.26	50.6	-3.5	853	853	59.4	-4.1	316.9	-42.5	2.5	11.3	-4.4
30TH	300.93	51.2	-2.8	853	853	60.0	-3.2	266.2	-39.0	2.0	8.1	-4.0
31ST	311.59	51.7	-2.8	853	853	60.6	-3.3	215.0	-36.2	1.6	5.6	-3.6
32ND	322.26	48.7	-2.2	853	853	57.0	-2.6	163.4	-33.4	1.2	3.6	-3.3
33RD	332.93	42.1	-4.6	767	853	54.9	-5.4	114.7	-31.2	.9	2.1	-2.9
34TH	343.59	33.5	-5.4	592	853	56.6	-6.4	72.6	-26.6	.6	1.1	-2.3
35TH	354.26	36.6	-14.6	678	1820	53.9	-8.0	39.1	-21.2	.3	.5	-1.6
PARA	377.01	2.5	-6.5	49	639	51.8	-10.2	2.5	-6.5	.0	.0	-.2

TABLE 7. SHEAR AND MOMENT DIAGRAMS : 1221 BRICKELL BUILDING
WIND DIRECTION 220 CONFIGURATION A REFERENCE PRESSURE 48.0 PSF GUST FACTOR 1.32

FLOOR	HEIGHT FT	X-FORCE KIPS	Y-FORCE KIPS	X-AREA SQ FT	Y-AREA SQ FT	X-PRESS PSF	Y-PRESS PSF	X-SHEAR KIPS	Y-SHEAR KIPS	X-MOMENT 1000-FT-KIPS	Y-MOMENT 1000-FT-KIPS	Z-MOMENT 1000-FT-KIPS
1ST	0.00	59.5	-28.7	1598	1033	37.2	-27.8	1709.7	-900.3	164.2	296.5	-34.7
2ND	12.92	43.3	-23.9	1320	853	32.8	-28.0	1650.2	-871.6	152.8	274.8	-32.4
3RD	23.58	46.1	-22.8	1391	853	33.1	-26.7	1606.9	-847.7	143.6	257.4	-30.6
4TH	34.25	50.7	-22.2	1461	853	34.7	-26.0	1560.8	-824.9	134.7	240.5	-28.8
5TH	44.92	52.2	-28.3	1461	853	35.7	-33.2	1510.1	-802.7	126.0	224.1	-27.2
6TH	55.58	53.3	-28.8	1461	853	36.5	-33.7	1457.9	-774.4	117.6	208.3	-25.5
7TH	66.25	54.3	-29.5	1461	853	37.2	-34.6	1404.6	-745.6	109.5	193.1	-23.8
8TH	76.92	56.3	-30.4	1461	853	38.5	-35.6	1350.3	-716.1	101.7	178.4	-22.1
9TH	87.59	58.4	-31.2	1461	853	39.9	-36.5	1293.9	-685.7	94.2	164.3	-20.2
10TH	98.25	60.4	-32.0	1461	853	41.3	-37.5	1235.6	-654.5	87.1	150.8	-18.3
11TH	108.92	62.4	-32.5	1461	853	42.7	-38.1	1175.2	-622.6	80.3	137.9	-16.3
12TH	119.59	64.5	-31.3	1461	853	44.1	-36.6	1112.7	-590.1	73.8	125.7	-14.1
14TH	130.25	67.8	-29.2	1461	853	46.4	-34.2	1048.2	-558.8	67.7	114.2	-12.0
15TH	140.92	65.6	-28.8	1396	853	47.0	-33.8	980.4	-529.6	61.9	103.4	-9.6
16TH	151.59	60.9	-27.5	1264	853	48.2	-32.2	914.8	-500.8	56.4	93.3	-7.6
17TH	162.26	55.8	-26.3	1131	853	49.3	-30.8	853.9	-473.3	51.2	83.8	-6.2
18TH	172.92	50.2	-25.0	999	853	50.3	-29.3	798.2	-447.0	46.3	75.0	-5.2
19TH	183.59	42.9	-24.9	853	853	50.2	-29.2	747.9	-422.0	41.6	66.8	-4.6
20TH	194.26	43.8	-24.7	853	853	51.4	-29.0	705.1	-397.1	37.3	59.0	-4.5
21ST	204.92	44.3	-24.3	853	853	51.9	-28.5	661.2	-372.4	33.2	51.7	-4.4
22ND	215.59	44.7	-23.7	853	853	52.3	-27.7	616.9	-348.1	29.3	44.9	-4.2
23RD	226.26	45.1	-23.1	853	853	52.8	-27.0	572.3	-324.4	25.7	38.6	-4.0
24TH	236.92	45.5	-22.4	853	853	53.3	-26.3	527.2	-301.3	22.4	32.7	-3.8
25TH	247.59	45.9	-22.0	853	853	53.8	-25.8	481.7	-278.9	19.3	27.3	-3.6
26TH	258.26	46.1	-21.8	853	853	54.0	-25.5	435.8	-256.9	16.4	22.4	-3.4
27TH	268.92	46.4	-21.5	853	853	54.3	-25.2	389.7	-235.2	13.8	18.0	-3.2
28TH	279.59	46.6	-21.3	853	853	54.6	-25.0	343.3	-213.6	11.4	14.1	-3.0
29TH	290.26	46.9	-21.1	853	853	54.9	-24.7	296.7	-192.3	9.3	10.7	-2.8
30TH	300.93	47.1	-20.9	853	853	55.2	-24.5	249.9	-171.2	7.3	7.8	-2.6
31ST	311.59	47.4	-20.8	853	853	55.5	-24.3	202.8	-150.3	5.6	5.4	-2.3
32ND	322.26	44.9	-20.0	853	853	52.7	-23.4	155.4	-129.5	4.1	3.5	-2.1
33RD	332.93	39.3	-22.2	767	853	51.2	-26.1	110.5	-109.6	2.8	2.0	-1.9
34TH	343.59	32.1	-22.6	592	853	54.3	-26.4	71.2	-87.3	1.8	1.1	-1.5
35TH	354.26	36.4	-48.8	678	1820	53.7	-26.8	39.0	-64.8	1.0	.5	-1.0
PARA	377.01	2.6	-16.0	49	639	53.7	-25.0	2.6	-16.0	.1	.0	-.1

TABLE 7. SHEAR AND MOMENT DIAGRAMS : 1221 BRICKELL BUILDING
WIND DIRECTION 230 CONFIGURATION A REFERENCE PRESSURE 48.0 PSF GUST FACTOR 1.32

FLOOR	HEIGHT FT	X-FORCE KIPS	Y-FORCE KIPS	X-AREA SQ FT	Y-AREA SQ FT	X-PRESS PSF	Y-PRESS PSF	X-SHEAR KIPS	Y-SHEAR KIPS	X-MOMENT 1000-FT-KIPS	Y-MOMENT 1000-FT-KIPS	Z-MOMENT 1000-FT-KIPS
1ST	0.00	51.4	-33.7	1598	1033	32.1	-32.6	1576.3	-1236.7	242.8	269.5	-31.7
2ND	12.92	38.2	-28.6	1320	853	29.0	-33.5	1524.9	-1203.0	227.0	249.4	-29.5
3RD	23.58	42.4	-27.6	1391	853	30.5	-32.3	1486.7	-1174.4	214.3	233.4	-27.7
4TH	34.25	48.0	-26.8	1461	853	32.8	-31.3	1444.3	-1146.9	202.0	217.7	-26.0
5TH	44.92	50.9	-32.3	1461	853	34.8	-37.8	1396.3	-1120.1	189.9	202.6	-24.3
6TH	55.58	53.4	-32.9	1461	853	36.5	-38.5	1345.4	-1087.8	178.1	188.0	-22.5
7TH	66.25	54.7	-33.8	1461	853	37.4	-39.7	1292.0	-1055.0	166.7	173.9	-20.8
8TH	76.92	56.0	-34.9	1461	853	38.3	-40.9	1237.3	-1021.1	155.6	160.4	-18.9
9TH	87.59	57.2	-36.0	1461	853	39.2	-42.1	1181.4	-986.2	144.9	147.5	-17.0
10TH	98.25	58.5	-37.0	1461	853	40.0	-43.4	1124.1	-950.3	134.6	135.2	-15.0
11TH	108.92	59.8	-37.8	1461	853	40.9	-44.3	1065.6	-913.3	124.6	123.5	-13.0
12TH	119.59	61.1	-37.4	1461	853	41.8	-43.8	1005.8	-875.4	115.1	112.5	-10.8
14TH	130.25	64.2	-36.7	1461	853	43.9	-43.0	944.8	-838.0	105.9	102.1	-8.7
15TH	140.92	61.8	-34.8	1396	853	44.3	-40.7	880.6	-801.4	97.2	92.3	-6.3
16TH	151.59	56.6	-34.5	1264	853	44.8	-40.4	818.8	-766.6	88.8	83.3	-4.3
17TH	162.26	50.7	-34.4	1131	853	44.8	-40.3	762.3	-732.2	80.8	74.8	-2.9
18TH	172.92	45.6	-34.0	999	853	45.7	-39.8	711.6	-697.7	73.2	67.0	-2.0
19TH	183.59	37.3	-35.8	853	853	43.7	-41.9	666.0	-663.8	66.0	59.6	-1.6
20TH	194.26	38.5	-36.2	853	853	45.1	-42.5	628.7	-628.0	59.1	52.7	-1.6
21ST	204.92	39.0	-36.4	853	853	45.7	-42.6	590.3	-591.7	52.6	46.2	-1.5
22ND	215.59	39.5	-36.1	853	853	46.3	-42.3	551.2	-555.4	46.4	40.1	-1.5
23RD	226.26	40.1	-35.9	853	853	47.0	-42.1	511.7	-519.2	40.7	34.5	-1.5
24TH	236.92	40.6	-35.6	853	853	47.6	-41.8	471.6	-483.4	35.4	29.2	-1.4
25TH	247.59	41.1	-35.5	853	853	48.2	-41.6	431.0	-447.7	30.4	24.4	-1.4
26TH	258.26	41.3	-35.4	853	853	48.4	-41.5	389.9	-412.2	25.8	20.0	-1.3
27TH	268.92	41.6	-35.3	853	853	48.7	-41.4	348.6	-376.8	21.6	16.1	-1.2
28TH	279.59	41.8	-35.3	853	853	49.0	-41.3	307.0	-341.4	17.8	12.6	-1.2
29TH	290.26	42.0	-35.2	853	853	49.2	-41.2	265.2	-306.2	14.3	9.6	-1.1
30TH	300.93	42.3	-35.1	853	853	49.5	-41.2	223.2	-271.0	11.2	6.9	-1.0
31ST	311.59	42.5	-34.8	853	853	49.8	-40.8	180.9	-235.8	8.5	4.8	-1.0
32ND	322.26	40.0	-33.8	853	853	46.8	-39.6	138.5	-201.1	6.2	3.1	-.9
33RD	332.93	34.7	-35.8	767	853	45.3	-41.9	98.5	-167.2	4.2	1.8	-.8
34TH	343.59	28.9	-35.4	592	853	48.8	-41.5	63.8	-131.5	2.6	1.0	-.6
35TH	354.26	32.7	-73.8	678	1820	48.2	-40.6	34.9	-96.1	1.4	.4	-.4
PARA	377.01	2.2	-22.2	49	639	45.5	-34.8	2.2	-22.2	.1	.0	.1

TABLE 7. SHEAR AND MOMENT DIAGRAMS : 1221 BRICKELL BUILDING
WIND DIRECTION 240 CONFIGURATION A REFERENCE PRESSURE 48.0 PSF GUST FACTOR 1.32

FLOOR	HEIGHT FT	X-FORCE KIPS	Y-FORCE KIPS	X-AREA SQ FT	Y-AREA SQ FT	X-PRESS PSF	Y-PRESS PSF	X-SHEAR KIPS	Y-SHEAR KIPS	X-MOMENT	Y-MOMENT	Z-MOMENT
										1000-FT-KIPS		
1ST	0.00	47.9	-32.4	1598	1033	30.0	-31.4	1359.9	-1409.8	287.9	223.6	-26.8
2ND	12.92	35.6	-27.6	1320	853	27.0	-32.3	1312.0	-1377.4	269.9	206.4	-24.7
3RD	23.58	39.4	-27.7	1391	853	28.3	-32.4	1276.4	-1349.8	255.3	192.6	-23.0
4TH	34.25	44.3	-28.2	1461	853	30.3	-33.1	1237.0	-1322.1	241.1	179.2	-21.3
5TH	44.92	46.5	-33.4	1461	853	31.8	-39.2	1192.7	-1293.9	227.1	166.2	-19.7
6TH	55.58	48.4	-33.9	1461	853	33.1	-39.7	1146.2	-1260.5	213.5	153.7	-18.1
7TH	66.25	49.6	-35.0	1461	853	34.0	-41.0	1097.8	-1226.6	200.2	141.7	-16.4
8TH	76.92	50.9	-36.2	1461	853	34.8	-42.4	1048.2	-1191.6	187.3	130.3	-14.8
9TH	87.59	52.1	-37.4	1461	853	35.7	-43.9	997.3	-1155.4	174.8	119.4	-13.1
10TH	98.25	53.4	-38.7	1461	853	36.5	-45.3	945.2	-1118.0	162.7	109.0	-11.3
11TH	108.92	54.7	-39.7	1461	853	37.4	-46.6	891.8	-1079.3	151.0	99.2	-9.4
12TH	119.59	55.9	-39.8	1461	853	38.3	-46.6	837.1	-1039.6	139.7	90.0	-7.5
14TH	130.25	58.8	-37.8	1461	853	40.2	-44.4	781.2	-999.8	128.8	81.4	-5.5
15TH	140.92	55.6	-38.4	1396	853	39.8	-45.0	722.5	-962.0	118.3	73.4	-3.4
16TH	151.59	50.0	-37.9	1264	853	39.6	-44.4	666.9	-923.6	108.3	66.0	-1.6
17TH	162.26	44.1	-38.2	1131	853	39.0	-44.8	616.9	-885.7	98.6	59.1	-.4
18TH	172.92	39.2	-39.1	999	853	39.3	-45.8	572.8	-847.5	89.4	52.8	.3
19TH	183.59	30.8	-41.1	853	853	36.1	-48.2	533.5	-808.4	80.5	46.9	.7
20TH	194.26	31.9	-42.6	853	853	37.3	-49.9	502.7	-767.2	72.1	41.3	.6
21ST	204.92	32.3	-43.1	853	853	37.8	-50.6	470.9	-724.6	64.2	36.1	.5
22ND	215.59	32.7	-43.5	853	853	38.3	-51.0	438.6	-681.5	56.7	31.3	.4
23RD	226.26	33.1	-43.9	853	853	38.8	-51.4	405.9	-638.0	49.7	26.8	.4
24TH	236.92	33.5	-44.2	853	853	39.2	-51.8	372.9	-594.1	43.1	22.6	.3
25TH	247.59	33.8	-44.4	853	853	39.6	-52.0	339.4	-549.9	37.0	18.8	.3
26TH	258.26	33.7	-44.3	853	853	39.5	-51.9	305.6	-505.5	31.3	15.4	.2
27TH	268.92	33.6	-44.1	853	853	39.4	-51.7	271.8	-461.3	26.2	12.3	.2
28TH	279.59	33.5	-44.0	853	853	39.3	-51.6	238.2	-417.2	21.5	9.6	.1
29TH	290.26	33.5	-43.9	853	853	39.2	-51.4	204.6	-373.2	17.3	7.2	.1
30TH	300.93	33.4	-43.7	853	853	39.1	-51.3	171.2	-329.3	13.5	5.2	.0
31ST	311.59	33.3	-43.1	853	853	39.0	-50.5	137.8	-285.5	10.3	3.6	-.0
32ND	322.26	30.9	-41.8	853	853	36.2	-49.0	104.6	-242.5	7.5	2.3	-.1
33RD	332.93	26.5	-43.2	767	853	34.5	-50.6	73.7	-200.7	5.1	1.3	-.2
34TH	343.59	22.1	-42.6	592	853	37.3	-49.9	47.2	-157.5	3.2	.7	-.1
35TH	354.26	23.7	-87.9	678	1820	35.0	-48.3	25.1	-114.9	1.7	.3	.0
PARA	377.01	1.4	-27.0	49	639	28.2	-42.3	1.4	-27.0	.1	.0	.1

TABLE 7. SHEAR AND MOMENT DIAGRAMS : 1221 BRICKELL BUILDING

WIND DIRECTION 250 CONFIGURATION A REFERENCE PRESSURE 48.0 PSF GUST FACTOR 1.32

FLOOR	HEIGHT FT	X-FORCE KIPS	Y-FORCE KIPS	X-AREA SQ FT	Y-AREA SQ FT	X-PRESS PSF	Y-PRESS PSF	X-SHEAR KIPS	Y-SHEAR KIPS	X-MOMENT 1000-FT-KIPS	Y-MOMENT 1000-FT-KIPS	Z-MOMENT 1000-FT-KIPS
1ST	0.00	36.5	-36.1	1598	1033	22.9	-34.9	983.0	-1546.8	319.2	153.0	-16.6
2ND	12.92	26.8	-30.5	1320	853	20.3	-35.7	946.5	-1510.7	299.5	140.5	-14.9
3RD	23.58	29.9	-30.5	1391	853	21.5	-35.7	919.7	-1480.2	283.5	130.6	-13.7
4TH	34.25	34.0	-30.4	1461	853	23.3	-35.6	889.8	-1449.8	267.9	120.9	-12.5
5TH	44.92	36.3	-35.8	1461	853	24.8	-42.0	855.8	-1419.4	252.6	111.6	-11.3
6TH	55.58	38.3	-36.5	1461	853	26.2	-42.7	819.5	-1383.6	237.6	102.7	-10.2
7TH	66.25	39.3	-37.7	1461	853	26.9	-44.2	781.2	-1347.1	223.1	94.1	-9.0
8TH	76.92	40.5	-39.1	1461	853	27.7	-45.8	741.9	-1309.4	208.9	86.0	-7.8
9TH	87.59	41.7	-40.4	1461	853	28.6	-47.4	701.4	-1270.3	195.2	78.3	-6.6
10TH	98.25	43.0	-41.8	1461	853	29.4	-49.0	659.6	-1229.9	181.8	71.1	-5.2
11TH	108.92	44.2	-43.0	1461	853	30.2	-50.4	616.7	-1188.1	168.9	64.2	-3.8
12TH	119.59	45.4	-43.2	1461	853	31.0	-50.6	572.5	-1145.1	156.5	57.9	-2.3
14TH	130.25	46.8	-41.8	1461	853	32.0	-48.9	527.1	-1101.9	144.5	52.0	-.8
15TH	140.92	42.6	-41.0	1396	853	30.5	-48.0	480.4	-1060.2	133.0	46.7	.8
16TH	151.59	36.7	-40.8	1264	853	29.0	-47.8	437.7	-1019.2	121.9	41.8	2.0
17TH	162.26	31.2	-41.5	1131	853	27.6	-48.6	401.1	-978.4	111.2	37.3	2.8
18TH	172.92	27.4	-42.1	999	853	27.4	-49.3	369.9	-936.9	101.0	33.2	3.2
19TH	183.59	19.8	-43.4	853	853	23.3	-50.9	342.5	-894.9	91.2	29.4	3.3
20TH	194.26	20.5	-45.6	853	853	24.1	-53.4	322.6	-851.4	81.9	25.8	3.1
21ST	204.92	21.0	-46.2	853	853	24.6	-54.1	302.1	-805.9	73.1	22.5	2.9
22ND	215.59	21.4	-46.2	853	853	25.0	-54.2	281.1	-759.7	64.7	19.4	2.7
23RD	226.26	21.8	-46.3	853	853	25.5	-54.2	259.8	-713.5	56.9	16.5	2.5
24TH	236.92	22.2	-46.3	853	853	26.0	-54.3	238.0	-667.2	49.5	13.9	2.4
25TH	247.59	22.5	-46.6	853	853	26.4	-54.6	215.8	-620.9	42.6	11.4	2.2
26TH	258.26	22.4	-47.1	853	853	26.3	-55.2	193.3	-574.3	36.3	9.3	2.0
27TH	268.92	22.3	-47.6	853	853	26.2	-55.8	170.9	-527.1	30.4	7.3	1.8
28TH	279.59	22.2	-48.2	853	853	26.1	-56.4	148.6	-479.5	25.0	5.6	1.7
29TH	290.26	22.1	-48.7	853	853	25.9	-57.0	126.3	-431.3	20.2	4.1	1.5
30TH	300.93	22.0	-49.2	853	853	25.8	-57.6	104.2	-382.7	15.8	2.9	1.3
31ST	311.59	22.0	-49.1	853	853	25.7	-57.5	82.1	-333.5	12.0	1.9	1.0
32ND	322.26	20.1	-49.1	853	853	23.5	-57.5	60.2	-284.4	8.7	1.2	.8
33RD	332.93	16.7	-50.9	767	853	21.8	-59.6	40.1	-235.3	5.9	.6	.6
34TH	343.59	13.6	-50.1	592	853	23.1	-58.7	23.4	-184.5	3.7	.3	.5
35TH	354.26	10.0	-103.7	678	1820	14.7	-57.0	9.7	-134.4	2.0	.1	.5
PARA	377.01	-.2	-30.7	49	639	-4.9	-48.0	-.2	-30.7	.1	-.0	.2

TABLE 7. SHEAR AND MOMENT DIAGRAMS : 1221 BRICKELL BUILDING
WIND DIRECTION 260 CONFIGURATION A REFERENCE PRESSURE 48.0 PSF GUST FACTOR 1.32

FLOOR	HEIGHT FT	X-FORCE KIPS	Y-FORCE KIPS	X-AREA SQ FT	Y-AREA SQ FT	X-PRESS PSF	Y-PRESS PSF	X-SHEAR KIPS	Y-SHEAR KIPS	X-MOMENT 1000-FT-KIPS	Y-MOMENT 1000-FT-KIPS	Z-MOMENT 1000-FT-KIPS
1ST	0.00	26.6	-39.2	1598	1033	16.7	-38.0	505.2	-1659.5	344.1	57.4	-4.4
2ND	12.92	19.8	-32.7	1320	853	15.0	-38.3	478.6	-1620.3	323.0	51.1	-3.2
3RD	23.58	22.0	-33.4	1391	853	15.8	-39.1	458.8	-1587.6	305.8	46.1	-2.4
4TH	34.25	24.9	-34.7	1461	853	17.0	-40.6	436.8	-1554.2	289.1	41.3	-1.6
5TH	44.92	26.3	-39.6	1461	853	18.0	-46.4	411.9	-1519.6	272.7	36.8	-.9
6TH	55.58	27.3	-40.4	1461	853	18.7	-47.3	385.6	-1480.0	256.7	32.5	-.3
7TH	66.25	27.6	-41.3	1461	853	18.9	-48.4	358.3	-1439.6	241.1	28.6	.3
8TH	76.92	28.5	-42.3	1461	853	19.5	-49.6	330.6	-1398.2	226.0	24.9	.9
9TH	87.59	29.4	-43.2	1461	853	20.1	-50.7	302.2	-1355.9	211.3	21.5	1.6
10TH	98.25	30.2	-44.2	1461	853	20.7	-51.8	272.8	-1312.7	197.1	18.5	2.3
11TH	108.92	31.1	-45.0	1461	853	21.3	-52.8	242.5	-1268.5	183.3	15.7	3.0
12TH	119.59	32.0	-45.0	1461	853	21.9	-52.7	211.4	-1223.5	170.0	13.3	3.8
14TH	130.25	32.3	-43.9	1461	853	22.1	-51.5	179.4	-1178.5	157.2	11.2	4.5
15TH	140.92	24.5	-40.5	1396	853	17.6	-47.4	147.1	-1134.5	144.9	9.5	5.5
16TH	151.59	18.4	-40.8	1264	853	14.6	-47.8	122.6	-1094.1	133.0	8.0	5.9
17TH	162.26	13.2	-42.1	1131	853	11.7	-49.3	104.1	-1053.3	121.5	6.8	6.1
18TH	172.92	11.3	-42.8	999	853	11.3	-50.2	90.9	-1011.2	110.5	5.8	6.0
19TH	183.59	6.3	-44.2	853	853	7.4	-51.8	79.6	-968.4	100.0	4.9	5.9
20TH	194.26	6.9	-47.8	853	853	8.1	-56.0	73.3	-924.2	89.9	4.0	5.6
21ST	204.92	6.8	-49.2	853	853	8.0	-57.6	66.4	-876.4	80.3	3.3	5.3
22ND	215.59	6.7	-49.3	853	853	7.9	-57.8	59.6	-827.2	71.2	2.6	5.0
23RD	226.26	6.6	-49.5	853	853	7.8	-58.0	52.8	-777.9	62.6	2.0	4.7
24TH	236.92	6.6	-49.6	853	853	7.7	-58.1	46.2	-728.4	54.6	1.5	4.4
25TH	247.59	6.4	-50.0	853	853	7.6	-58.6	39.6	-678.8	47.1	1.0	4.2
26TH	258.26	6.3	-50.6	853	853	7.3	-59.3	33.2	-628.8	40.1	.7	3.9
27TH	268.92	6.1	-51.2	853	853	7.1	-60.0	26.9	-578.2	33.7	.3	3.5
28TH	279.59	5.9	-51.8	853	853	6.9	-60.7	20.9	-526.9	27.8	.1	3.2
29TH	290.26	5.7	-52.4	853	853	6.7	-61.4	15.0	-475.1	22.4	-.1	2.9
30TH	300.93	5.5	-53.0	853	853	6.4	-62.1	9.3	-422.7	17.6	-.2	2.5
31ST	311.59	5.3	-53.0	853	853	6.2	-62.2	3.9	-369.7	13.4	-.3	2.1
32ND	322.26	4.4	-53.5	853	853	5.1	-62.7	-1.4	-316.6	9.7	-.3	1.7
33RD	332.93	2.1	-56.6	767	853	2.7	-66.4	-5.8	-263.1	6.7	-.3	1.4
34TH	343.59	.9	-55.9	592	853	1.5	-65.5	-7.9	-206.5	4.1	-.2	1.1
35TH	354.26	-7.2	-115.9	678	1820	-10.7	-63.7	-8.8	-150.6	2.2	-.1	.8
PARA	377.01	-1.5	-34.7	49	639	-31.6	-54.3	-1.5	-34.7	.1	-.0	.2

TABLE 7. SHEAR AND MOMENT DIAGRAMS : 1221 BRICKELL BUILDING
WIND DIRECTION 270 CONFIGURATION A REFERENCE PRESSURE 48.0 PSF GUST FACTOR 1.32

FLOOR	HEIGHT FT	X-FORCE KIPS	Y-FORCE KIPS	X-AREA SQ FT	Y-AREA SQ FT	X-PRESS PSF	Y-PRESS PSF	X-SHEAR KIPS	Y-SHEAR KIPS	X-MOMENT	Y-MOMENT	Z-MOMENT
										1000-FT-KIPS		
1ST	0.00	23.6	-31.6	1598	1033	14.8	-30.6	149.6	-1684.1	360.8	-20.0	1.0
2ND	12.92	17.8	-25.1	1320	853	13.4	-29.4	126.0	-1652.5	339.2	-21.8	2.0
3RD	23.58	19.9	-26.0	1391	853	14.3	-30.4	108.3	-1627.4	321.7	-23.1	2.8
4TH	34.25	22.1	-29.7	1461	853	15.1	-34.8	88.4	-1601.5	304.5	-24.1	3.6
5TH	44.92	22.6	-35.8	1461	853	15.5	-42.0	66.3	-1571.8	287.6	-24.9	4.2
6TH	55.58	23.0	-36.7	1461	853	15.8	-43.0	43.7	-1535.9	271.0	-25.5	4.7
7TH	66.25	23.1	-38.5	1461	853	15.8	-45.1	20.6	-1499.2	254.8	-25.9	5.1
8TH	76.92	23.2	-40.4	1461	853	15.8	-47.3	-2.5	-1460.8	239.1	-26.0	5.6
9TH	87.59	23.2	-42.3	1461	853	15.9	-49.5	-25.6	-1420.4	223.7	-25.8	6.1
10TH	98.25	23.3	-44.2	1461	853	16.0	-51.8	-48.9	-1378.1	208.8	-25.4	6.5
11TH	108.92	23.4	-45.9	1461	853	16.0	-53.8	-72.2	-1334.0	194.3	-24.8	6.9
12TH	119.59	23.5	-46.8	1461	853	16.1	-54.9	-95.6	-1288.1	180.3	-23.9	7.4
14TH	130.25	19.5	-47.4	1461	853	13.3	-55.6	-119.0	-1241.2	166.8	-22.7	7.7
15TH	140.92	8.2	-43.8	1396	853	5.8	-51.3	-138.5	-1193.8	153.8	-21.4	8.0
16TH	151.59	1.2	-43.7	1264	853	.9	-51.2	-146.7	-1150.0	141.3	-19.8	7.8
17TH	162.26	-3.9	-44.2	1131	853	-3.5	-51.7	-147.9	-1106.3	129.3	-18.3	7.3
18TH	172.92	-2.4	-44.7	999	853	-2.4	-52.4	-143.9	-1062.1	117.7	-16.7	6.7
19TH	183.59	-5.2	-44.9	853	853	-6.1	-52.6	-141.6	-1017.4	106.6	-15.2	6.3
20TH	194.26	-5.2	-48.7	853	853	-6.1	-57.1	-136.4	-972.5	96.0	-13.7	6.0
21ST	204.92	-5.7	-50.0	853	853	-6.7	-58.6	-131.2	-923.8	85.9	-12.3	5.6
22ND	215.59	-6.2	-50.3	853	853	-7.2	-59.0	-125.5	-873.8	76.3	-10.9	5.2
23RD	226.26	-6.6	-50.6	853	853	-7.8	-59.3	-119.3	-823.5	67.3	-9.6	4.9
24TH	236.92	-7.1	-50.9	853	853	-8.3	-59.6	-112.6	-772.9	58.8	-8.4	4.5
25TH	247.59	-7.5	-51.3	853	853	-8.8	-60.2	-105.5	-722.0	50.8	-7.2	4.2
26TH	258.26	-7.7	-52.1	853	853	-9.0	-61.0	-98.0	-670.7	43.4	-6.1	3.9
27TH	268.92	-7.9	-52.8	853	853	-9.2	-61.9	-90.3	-618.6	36.5	-5.1	3.6
28TH	279.59	-8.1	-53.5	853	853	-9.4	-62.7	-82.4	-565.8	30.2	-4.2	3.2
29TH	290.26	-8.2	-54.3	853	853	-9.6	-63.6	-74.3	-512.2	24.4	-3.4	2.9
30TH	300.93	-8.4	-55.0	853	853	-9.8	-64.5	-66.1	-458.0	19.2	-2.6	2.5
31ST	311.59	-8.6	-55.6	853	853	-10.0	-65.1	-57.7	-403.0	14.7	-2.0	2.2
32ND	322.26	-8.9	-57.5	853	853	-10.5	-67.4	-49.1	-347.4	10.6	-1.4	1.8
33RD	332.93	-10.3	-64.4	767	853	-13.4	-75.4	-40.2	-289.9	7.2	-.9	1.5
34TH	343.59	-9.8	-62.4	592	853	-16.6	-73.1	-29.9	-225.5	4.5	-.5	1.2
35TH	354.26	-17.8	-125.9	678	1820	-26.3	-69.2	-20.1	-163.1	2.4	-.3	.9
PARA	377.01	-2.3	-37.2	49	639	-47.4	-58.3	-2.3	-37.2	.1	-.0	.2

TABLE 7. SHEAR AND MOMENT DIAGRAMS : 1221 BRICKELL BUILDING
WIND DIRECTION 280 CONFIGURATION A REFERENCE PRESSURE 48.0 PSF GUST FACTOR 1.32

FLOOR	HEIGHT FT	X-FORCE KIPS	Y-FORCE KIPS	X-AREA SQ FT	Y-AREA SQ FT	X-PRESS PSF	Y-PRESS PSF	X-SHEAR KIPS	Y-SHEAR KIPS	X-MOMENT 1000-FT-KIPS	Y-MOMENT 1000-FT-KIPS	Z-MOMENT 1000-FT-KIPS
1ST	0.00	18.8	-26.4	1598	1033	11.7	-25.5	74.0	-1691.1	370.6	-20.6	-1.1
2ND	12.92	14.4	-21.0	1320	853	10.9	-24.6	55.2	-1664.7	348.9	-21.5	-.1
3RD	23.58	15.4	-21.6	1391	853	11.0	-25.3	40.8	-1643.8	331.3	-22.0	.6
4TH	34.25	16.2	-26.2	1461	853	11.1	-30.7	25.5	-1622.2	313.8	-22.3	1.3
5TH	44.92	16.3	-33.4	1461	853	11.2	-39.1	9.2	-1596.0	296.7	-22.5	1.8
6TH	55.58	16.2	-34.9	1461	853	11.1	-40.9	-7.1	-1562.6	279.8	-22.5	2.2
7TH	66.25	16.2	-37.0	1461	853	11.1	-43.4	-23.3	-1527.7	263.3	-22.4	2.6
8TH	76.92	16.5	-39.2	1461	853	11.3	-46.0	-39.5	-1490.7	247.2	-22.0	3.0
9TH	87.59	16.9	-41.5	1461	853	11.5	-48.6	-56.0	-1451.5	231.6	-21.5	3.3
10TH	98.25	17.2	-43.7	1461	853	11.8	-51.3	-72.9	-1410.0	216.3	-20.8	3.7
11TH	108.92	17.5	-45.7	1461	853	12.0	-53.6	-90.1	-1366.3	201.5	-20.0	3.9
12TH	119.59	17.9	-46.6	1461	853	12.2	-54.6	-107.6	-1320.5	187.2	-18.9	4.2
14TH	130.25	11.7	-48.0	1461	853	8.0	-56.3	-125.5	-1273.9	173.3	-17.7	4.4
15TH	140.92	2.2	-44.8	1396	853	1.6	-52.6	-137.2	-1225.9	160.0	-16.3	4.3
16TH	151.59	-3.0	-44.2	1264	853	-2.3	-51.8	-139.4	-1181.1	147.1	-14.8	3.9
17TH	162.26	-7.0	-44.4	1131	853	-6.2	-52.0	-136.4	-1136.9	134.8	-13.3	3.5
18TH	172.92	-6.6	-44.6	999	853	-6.6	-52.3	-129.4	-1092.5	122.9	-11.9	3.1
19TH	183.59	-8.2	-46.1	853	853	-9.6	-54.1	-122.8	-1047.9	111.5	-10.5	2.8
20TH	194.26	-8.2	-48.8	853	853	-9.6	-57.1	-114.6	-1001.7	100.5	-9.3	2.6
21ST	204.92	-8.1	-49.7	853	853	-9.5	-58.2	-106.5	-953.0	90.1	-8.1	2.4
22ND	215.59	-8.1	-49.8	853	853	-9.5	-58.4	-98.3	-903.3	80.2	-7.0	2.2
23RD	226.26	-8.0	-50.0	853	853	-9.4	-58.5	-90.2	-853.5	70.8	-6.0	2.0
24TH	236.92	-8.0	-50.1	853	853	-9.4	-58.7	-82.2	-803.5	62.0	-5.1	1.8
25TH	247.59	-7.9	-50.8	853	853	-9.3	-59.5	-74.2	-753.4	53.7	-4.3	1.6
26TH	258.26	-7.6	-52.0	853	853	-8.9	-61.0	-66.3	-702.7	45.9	-3.5	1.5
27TH	268.92	-7.3	-53.3	853	853	-8.5	-62.5	-58.7	-650.6	38.7	-2.8	1.4
28TH	279.59	-7.0	-54.6	853	853	-8.2	-64.0	-51.4	-597.3	32.1	-2.2	1.2
29TH	290.26	-6.7	-55.9	853	853	-7.8	-65.6	-44.4	-542.6	26.0	-1.7	1.1
30TH	300.93	-6.3	-57.2	853	853	-7.4	-67.1	-37.7	-486.7	20.5	-1.3	.9
31ST	311.59	-6.0	-58.2	853	853	-7.1	-68.2	-31.4	-429.5	15.6	-.9	.8
32ND	322.26	-6.2	-61.1	853	853	-7.2	-71.7	-25.4	-371.2	11.3	-.6	.7
33RD	332.93	-5.9	-69.7	767	853	-7.7	-81.7	-19.2	-310.1	7.7	-.4	.6
34TH	343.59	-5.2	-67.2	592	853	-8.8	-78.8	-13.3	-240.4	4.8	-.2	.5
35TH	354.26	-7.4	-134.4	678	1820	-11.0	-73.8	-8.1	-173.2	2.6	-.1	.3
PARA	377.01	-.7	-38.8	49	639	-14.0	-60.7	-.7	-38.8	.2	-.0	.1

TABLE 7. SHEAR AND MOMENT DIAGRAMS : 1221 BRICKELL BUILDING
WIND DIRECTION 290 CONFIGURATION A REFERENCE PRESSURE 48.0 PSF GUST FACTOR 1.32

FLOOR	HEIGHT FT	X-FORCE KIPS	Y-FORCE KIPS	X-AREA SQ FT	Y-AREA SQ FT	X-PRESS PSF	Y-PRESS PSF	X-SHEAR KIPS	Y-SHEAR KIPS	X-MOMENT	Y-MOMENT	Z-MOMENT
										1000-FT-KIPS		
1ST	0.00	7.2	-22.6	1598	1033	4.5	-21.9	66.4	-1567.2	354.5	7.4	-.8
2ND	12.92	4.8	-18.6	1320	853	3.6	-21.8	59.2	-1544.6	334.4	6.6	-.7
3RD	23.58	5.1	-18.7	1391	853	3.7	-21.9	54.4	-1525.9	318.0	6.0	-.6
4TH	34.25	5.3	-22.2	1461	853	3.6	-26.0	49.3	-1507.3	301.8	5.5	-.6
5TH	44.92	5.1	-27.9	1461	853	3.5	-32.7	44.0	-1485.0	285.9	5.0	-.6
6TH	55.58	4.9	-29.2	1461	853	3.3	-34.2	38.8	-1457.1	270.2	4.5	-.6
7TH	66.25	4.9	-30.8	1461	853	3.3	-36.1	34.0	-1428.0	254.8	4.2	-.7
8TH	76.92	5.5	-32.5	1461	853	3.7	-38.1	29.1	-1397.1	239.7	3.8	-.7
9TH	87.59	6.0	-34.2	1461	853	4.1	-40.1	23.6	-1364.6	225.0	3.5	-.7
10TH	98.25	6.6	-35.9	1461	853	4.5	-42.0	17.6	-1330.5	210.6	3.3	-.7
11TH	108.92	7.2	-37.4	1461	853	4.9	-43.8	11.0	-1294.6	196.6	3.2	-.6
12TH	119.59	7.7	-37.8	1461	853	5.3	-44.3	3.8	-1257.2	183.0	3.1	-.6
14TH	130.25	4.9	-38.1	1461	853	3.4	-44.6	-3.9	-1219.4	169.8	3.1	-.5
15TH	140.92	-.1	-37.5	1396	853	-.0	-44.0	-8.8	-1181.3	157.0	3.2	-.5
16TH	151.59	-1.9	-38.1	1264	853	-1.5	-44.6	-8.8	-1143.8	144.6	3.2	-.7
17TH	162.26	-3.9	-39.8	1131	853	-3.5	-46.7	-6.8	-1105.7	132.6	3.3	-.9
18TH	172.92	-4.1	-41.8	999	853	-4.1	-49.0	-2.9	-1065.9	121.0	3.4	-1.0
19TH	183.59	-4.6	-43.5	853	853	-5.4	-51.0	1.2	-1024.1	109.9	3.4	-1.2
20TH	194.26	-4.3	-46.0	853	853	-5.0	-53.9	5.8	-980.5	99.2	3.4	-1.2
21ST	204.92	-3.9	-47.1	853	853	-4.6	-55.2	10.1	-934.5	89.0	3.3	-1.3
22ND	215.59	-3.6	-47.5	853	853	-4.2	-55.7	14.0	-887.4	79.3	3.1	-1.3
23RD	226.26	-3.2	-47.9	853	853	-3.8	-56.1	17.6	-839.9	70.0	3.0	-1.4
24TH	236.92	-2.9	-48.3	853	853	-3.3	-56.6	20.8	-792.0	61.3	2.8	-1.4
25TH	247.59	-2.4	-49.2	853	853	-2.8	-57.7	23.6	-743.7	53.1	2.5	-1.4
26TH	258.26	-1.5	-50.8	853	853	-1.7	-59.5	26.0	-694.5	45.5	2.3	-1.3
27TH	268.92	-.5	-52.3	853	853	-.6	-61.3	27.5	-643.7	38.3	2.0	-1.3
28TH	279.59	.4	-53.9	853	853	.4	-63.1	28.1	-591.4	31.7	1.7	-1.2
29TH	290.26	1.3	-55.4	853	853	1.5	-64.9	27.7	-537.5	25.7	1.4	-1.1
30TH	300.93	2.2	-56.9	853	853	2.6	-66.7	26.4	-482.1	20.3	1.1	-1.0
31ST	311.59	3.2	-57.8	853	853	3.7	-67.7	24.1	-425.2	15.5	.8	-.9
32ND	322.26	3.4	-60.4	853	853	4.0	-70.7	21.0	-367.4	11.2	.6	-.7
33RD	332.93	4.1	-68.9	767	853	5.4	-80.8	17.6	-307.0	7.6	.4	-.6
34TH	343.59	5.3	-66.7	592	853	8.9	-78.1	13.4	-238.1	4.7	.2	-.5
35TH	354.26	7.8	-133.4	678	1820	11.4	-73.3	8.2	-171.4	2.5	.1	-.4
PARA	377.01	.4	-38.0	49	639	8.5	-59.5	.4	-38.0	.2	.0	-.1

TABLE 7. SHEAR AND MOMENT DIAGRAMS : 1221 BRICKELL BUILDING
WIND DIRECTION 300 CONFIGURATION A REFERENCE PRESSURE 48.0 PSF GUST FACTOR 1.32

FLOOR	HEIGHT FT	X-FORCE KIPS	Y-FORCE KIPS	X-AREA SQ FT	Y-AREA SQ FT	X-PRESS PSF	Y-PRESS PSF	X-SHEAR KIPS	Y-SHEAR KIPS	X-MOMENT 1000-FT-KIPS	Y-MOMENT 1000-FT-KIPS	Z-MOMENT 1000-FT-KIPS
1ST	0.00	-6.3	-13.9	1598	1033	-4.0	-13.5	-256.3	-1184.7	292.1	-37.6	2.7
2ND	12.92	-5.3	-10.9	1320	853	-4.0	-12.7	-250.0	-1170.8	276.8	-34.3	2.2
3RD	23.58	-5.6	-10.3	1391	853	-4.0	-12.1	-244.7	-1159.9	264.4	-31.7	1.8
4TH	34.25	-5.7	-11.8	1461	853	-3.9	-13.8	-239.1	-1149.6	252.1	-29.1	1.4
5TH	44.92	-6.1	-15.4	1461	853	-4.2	-18.0	-233.4	-1137.9	239.9	-26.6	1.0
6TH	55.58	-6.6	-15.5	1461	853	-4.5	-18.2	-227.3	-1122.5	227.8	-24.1	.6
7TH	66.25	-7.3	-15.6	1461	853	-5.0	-18.3	-220.7	-1107.0	215.9	-21.7	.2
8TH	76.92	-7.7	-15.7	1461	853	-5.2	-18.4	-213.4	-1091.4	204.2	-19.4	-.2
9TH	87.59	-8.1	-15.8	1461	853	-5.5	-18.5	-205.8	-1075.7	192.7	-17.2	-.6
10TH	98.25	-8.5	-15.8	1461	853	-5.8	-18.6	-197.7	-1059.9	181.3	-15.0	-1.0
11TH	108.92	-8.9	-16.0	1461	853	-6.1	-18.7	-189.2	-1044.1	170.1	-12.9	-1.4
12TH	119.59	-9.3	-16.1	1461	853	-6.3	-18.9	-180.4	-1028.1	159.0	-11.0	-1.8
14TH	130.25	-12.0	-15.2	1461	853	-8.2	-17.8	-171.1	-1012.0	148.1	-9.1	-2.2
15TH	140.92	-16.2	-21.8	1396	853	-11.6	-25.6	-159.1	-996.8	137.4	-7.3	-2.6
16TH	151.59	-16.4	-25.0	1264	853	-13.0	-29.3	-142.9	-974.9	126.9	-5.7	-3.3
17TH	162.26	-16.6	-29.3	1131	853	-14.7	-34.4	-126.5	-949.9	116.6	-4.3	-3.7
18TH	172.92	-15.2	-34.8	999	853	-15.2	-40.8	-109.8	-920.6	106.6	-3.0	-4.0
19TH	183.59	-14.0	-39.7	853	853	-16.4	-46.5	-94.6	-885.8	97.0	-1.9	-4.1
20TH	194.26	-13.5	-39.7	853	853	-15.8	-46.6	-80.6	-846.1	87.8	-1.0	-4.0
21ST	204.92	-13.0	-39.3	853	853	-15.2	-46.1	-67.1	-806.4	79.0	-.2	-4.0
22ND	215.59	-12.5	-39.0	853	853	-14.6	-45.7	-54.1	-767.0	70.6	.4	-3.9
23RD	226.26	-12.0	-38.6	853	853	-14.0	-45.3	-41.7	-728.0	62.6	.9	-3.8
24TH	236.92	-11.5	-38.3	853	853	-13.4	-44.9	-29.7	-689.4	55.0	1.3	-3.7
25TH	247.59	-10.8	-39.2	853	853	-12.7	-45.9	-18.2	-651.1	47.9	1.6	-3.5
26TH	258.26	-9.2	-41.1	853	853	-10.8	-48.2	-7.4	-611.9	41.2	1.7	-3.3
27TH	268.92	-7.7	-43.1	853	853	-9.0	-50.5	1.8	-570.8	34.8	1.7	-3.1
28TH	279.59	-6.1	-45.1	853	853	-7.1	-52.9	9.5	-527.6	29.0	1.7	-2.9
29TH	290.26	-4.5	-47.1	853	853	-5.3	-55.2	15.6	-482.5	23.6	1.5	-2.6
30TH	300.93	-3.0	-49.1	853	853	-3.5	-57.5	20.1	-435.4	18.7	1.4	-2.3
31ST	311.59	-1.4	-50.4	853	853	-1.6	-59.0	23.1	-386.4	14.3	1.1	-2.0
32ND	322.26	.3	-53.1	853	853	.4	-62.2	24.4	-336.0	10.5	.9	-1.7
33RD	332.93	3.2	-60.7	767	853	4.2	-71.2	24.1	-282.9	7.2	.6	-1.4
34TH	343.59	6.3	-60.1	592	853	10.6	-70.4	20.9	-222.2	4.5	.4	-1.1
35TH	354.26	13.4	-124.7	678	1820	19.8	-68.5	14.6	-162.1	2.4	.2	-.8
PARA	377.01	1.2	-37.5	49	639	23.7	-58.6	1.2	-37.5	.1	.0	-.1

TABLE 7. SHEAR AND MOMENT DIAGRAMS : 1221 BRICKELL BUILDING
WIND DIRECTION 310 CONFIGURATION A REFERENCE PRESSURE 48.0 PSF GUST FACTOR 1.32

FLOOR	HEIGHT FT	X-FORCE KIPS	Y-FORCE KIPS	X-AREA SQ FT	Y-AREA SQ FT	X-PRESS PSF	Y-PRESS PSF	X-SHEAR KIPS	Y-SHEAR KIPS	X-MOMENT	Y-MOMENT 1000-FT-KIPS	Z-MOMENT
1ST	0.00	-11.5	-6.5	1598	1033	-7.2	-6.3	-702.0	-1077.4	273.9	-127.3	10.2
2ND	12.92	-9.6	-4.9	1320	853	-7.3	-5.7	-690.5	-1070.9	260.0	-118.3	9.4
3RD	23.58	-10.5	-4.3	1391	853	-7.5	-5.0	-680.9	-1066.1	248.6	-111.0	8.8
4TH	34.25	-11.4	-5.9	1461	853	-7.8	-7.0	-670.4	-1061.8	237.3	-103.8	8.2
5TH	44.92	-12.2	-10.1	1461	853	-8.3	-11.8	-659.1	-1055.8	226.0	-96.7	7.5
6TH	55.58	-13.2	-11.0	1461	853	-9.0	-12.8	-646.9	-1045.8	214.8	-89.7	6.8
7TH	66.25	-15.7	-11.5	1461	853	-10.7	-13.5	-633.8	-1034.8	203.7	-82.9	6.1
8TH	76.92	-18.7	-12.0	1461	853	-12.8	-14.1	-618.1	-1023.3	192.7	-76.2	5.3
9TH	87.59	-21.7	-12.5	1461	853	-14.9	-14.7	-599.4	-1011.2	181.8	-69.7	4.4
10TH	98.25	-24.7	-13.1	1461	853	-16.9	-15.3	-577.6	-998.7	171.1	-63.4	3.5
11TH	108.92	-27.8	-13.4	1461	853	-19.0	-15.7	-552.9	-985.6	160.5	-57.4	2.5
12TH	119.59	-30.8	-12.7	1461	853	-21.1	-14.8	-525.1	-972.2	150.1	-51.7	1.4
14TH	130.25	-35.5	-8.8	1461	853	-24.3	-10.3	-494.4	-959.5	139.8	-46.2	.3
15TH	140.92	-37.7	-19.9	1396	853	-27.0	-23.3	-458.8	-950.7	129.6	-41.1	-1.1
16TH	151.59	-33.3	-24.8	1264	853	-26.3	-29.0	-421.1	-930.8	119.6	-36.5	-2.5
17TH	162.26	-30.8	-30.1	1131	853	-27.2	-35.3	-387.8	-906.1	109.8	-32.1	-3.2
18TH	172.92	-27.7	-35.0	999	853	-27.7	-41.0	-357.0	-875.9	100.3	-28.2	-3.7
19TH	183.59	-24.8	-40.3	853	853	-29.1	-47.2	-329.3	-841.0	91.1	-24.5	-3.8
20TH	194.26	-24.9	-39.4	853	853	-29.1	-46.2	-304.5	-800.7	82.4	-21.1	-3.7
21ST	204.92	-24.9	-38.4	853	853	-29.2	-45.1	-279.7	-761.3	74.0	-18.0	-3.6
22ND	215.59	-24.9	-37.7	853	853	-29.2	-44.1	-254.8	-722.9	66.1	-15.2	-3.5
23RD	226.26	-24.9	-36.9	853	853	-29.2	-43.2	-229.8	-685.2	58.6	-12.6	-3.3
24TH	236.92	-25.0	-36.1	853	853	-29.3	-42.3	-204.9	-648.3	51.5	-10.3	-3.2
25TH	247.59	-24.8	-36.7	853	853	-29.0	-43.1	-179.9	-612.2	44.8	-8.2	-3.0
26TH	258.26	-23.4	-38.9	853	853	-27.4	-45.5	-155.2	-575.5	38.4	-6.4	-2.9
27TH	268.92	-22.0	-41.0	853	853	-25.8	-48.0	-131.8	-536.6	32.5	-4.9	-2.7
28TH	279.59	-20.6	-43.1	853	853	-24.2	-50.5	-109.8	-495.6	27.0	-3.6	-2.5
29TH	290.26	-19.2	-45.2	853	853	-22.5	-53.0	-89.2	-452.5	21.9	-2.5	-2.2
30TH	300.93	-17.9	-47.3	853	853	-20.9	-55.5	-69.9	-407.3	17.4	-1.7	-2.0
31ST	311.59	-16.5	-48.5	853	853	-19.3	-56.9	-52.1	-360.0	13.3	-1.0	-1.7
32ND	322.26	-14.5	-50.7	853	853	-17.0	-59.4	-35.6	-311.5	9.7	-.6	-1.4
33RD	332.93	-10.6	-55.6	767	853	-13.9	-65.1	-21.0	-260.8	6.6	-.3	-1.1
34TH	343.59	-7.2	-55.1	592	853	-12.1	-64.6	-10.4	-205.2	4.1	-.1	-.8
35TH	354.26	-3.8	-115.2	678	1820	-5.6	-63.3	-3.2	-150.2	2.2	-.0	-.6
PARA	377.01	.6	-35.0	49	639	11.5	-54.7	.6	-35.0	.1	.0	-.2

TABLE 7. SHEAR AND MOMENT DIAGRAMS : 1221 BRICKELL BUILDING
WIND DIRECTION 320 CONFIGURATION A REFERENCE PRESSURE 48.0 PSF GUST FACTOR 1.32

FLOOR	HEIGHT FT	X-FORCE KIPS	Y-FORCE KIPS	X-AREA SQ FT	Y-AREA SQ FT	X-PRESS PSF	Y-PRESS PSF	X-SHEAR KIPS	Y-SHEAR KIPS	X-MOMENT 1000-FT-KIPS	Y-MOMENT 1000-FT-KIPS	Z-MOMENT 1000-FT-KIPS
1ST	0.00	-24.4	-3.2	1598	1033	-15.3	-3.1	-1212.4	-1035.6	256.7	-218.5	23.1
2ND	12.92	-18.9	-2.5	1320	853	-14.3	-3.0	-1188.0	-1032.4	243.3	-203.0	21.8
3RD	23.58	-21.0	-2.1	1391	853	-15.1	-2.4	-1169.1	-1029.9	232.3	-190.5	20.6
4TH	34.25	-23.8	-5.6	1461	853	-16.3	-6.6	-1148.1	-1027.8	221.3	-178.1	19.4
5TH	44.92	-26.6	-12.8	1461	853	-18.2	-15.0	-1124.3	-1022.2	210.4	-166.0	18.2
6TH	55.58	-29.7	-14.0	1461	853	-20.3	-16.4	-1097.7	-1009.4	199.6	-154.1	16.9
7TH	66.25	-33.9	-14.7	1461	853	-23.2	-17.2	-1068.0	-995.4	188.9	-142.6	15.6
8TH	76.92	-38.4	-15.3	1461	853	-26.3	-17.9	-1034.1	-980.7	178.3	-131.4	14.1
9TH	87.59	-43.0	-15.9	1461	853	-29.4	-18.6	-995.7	-965.5	167.9	-120.5	12.6
10TH	98.25	-47.5	-16.5	1461	853	-32.5	-19.3	-952.7	-949.6	157.7	-110.2	10.9
11TH	108.92	-52.1	-16.8	1461	853	-35.6	-19.7	-905.2	-933.1	147.7	-100.2	9.2
12TH	119.59	-56.6	-14.8	1461	853	-38.7	-17.3	-853.1	-916.3	137.8	-90.9	7.3
14TH	130.25	-58.2	-9.2	1461	853	-39.8	-10.8	-796.5	-901.6	128.1	-82.1	5.4
15TH	140.92	-56.8	-22.4	1396	853	-40.7	-26.2	-738.3	-892.4	118.6	-73.9	3.5
16TH	151.59	-51.0	-27.1	1264	853	-40.3	-31.7	-681.5	-870.0	109.2	-66.3	1.7
17TH	162.26	-46.3	-31.5	1131	853	-40.9	-36.9	-630.5	-843.0	100.0	-59.3	.5
18TH	172.92	-40.8	-33.7	999	853	-40.9	-39.5	-584.2	-811.5	91.2	-52.8	-.3
19TH	183.59	-34.3	-37.7	853	853	-40.1	-44.2	-543.4	-777.7	82.7	-46.8	-.6
20TH	194.26	-34.3	-37.5	853	853	-40.1	-44.0	-509.2	-740.1	74.6	-41.2	-.6
21ST	204.92	-34.4	-36.8	853	853	-40.3	-43.1	-474.9	-702.5	66.9	-36.0	-.6
22ND	215.59	-34.6	-36.4	853	853	-40.5	-42.6	-440.5	-665.7	59.6	-31.1	-.6
23RD	226.26	-34.8	-36.0	853	853	-40.7	-42.1	-405.9	-629.4	52.7	-26.6	-.5
24TH	236.92	-34.9	-35.6	853	853	-40.9	-41.7	-371.1	-593.4	46.2	-22.4	-.5
25TH	247.59	-35.0	-36.1	853	853	-41.0	-42.3	-336.2	-557.8	40.1	-18.6	-.5
26TH	258.26	-34.4	-37.5	853	853	-40.3	-44.0	-301.2	-521.8	34.3	-15.2	-.5
27TH	268.92	-33.8	-39.0	853	853	-39.6	-45.7	-266.8	-484.2	28.9	-12.2	-.4
28TH	279.59	-33.2	-40.5	853	853	-38.9	-47.4	-233.0	-445.2	24.0	-9.6	-.4
29TH	290.26	-32.6	-41.9	853	853	-38.2	-49.1	-199.9	-404.8	19.5	-7.2	-.3
30TH	300.93	-32.0	-43.4	853	853	-37.5	-50.9	-167.3	-362.8	15.4	-5.3	-.2
31ST	311.59	-31.4	-44.1	853	853	-36.8	-51.7	-135.3	-319.4	11.7	-3.7	-.1
32ND	322.26	-29.4	-45.3	853	853	-34.5	-53.1	-103.9	-275.3	8.5	-2.4	.0
33RD	332.93	-25.0	-48.9	767	853	-32.6	-57.3	-74.5	-230.0	5.9	-1.4	.1
34TH	343.59	-20.3	-48.5	592	853	-34.3	-56.8	-49.5	-181.1	3.7	-.8	.1
35TH	354.26	-27.1	-101.5	678	1820	-40.0	-55.8	-29.2	-132.6	2.0	-.4	.0
PARA	377.01	-2.0	-31.1	49	639	-41.6	-48.7	-2.0	-31.1	.1	-.0	-.1

TABLE 7. SHEAR AND MOMENT DIAGRAMS : 1221 BRICKELL BUILDING

WIND DIRECTION 330 CONFIGURATION A REFERENCE PRESSURE 48.0 PSF GUST FACTOR 1.32

FLOOR	HEIGHT FT	X-FORCE KIPS	Y-FORCE KIPS	X-AREA SQ FT	Y-AREA SQ FT	X-PRESS PSF	Y-PRESS PSF	X-SHEAR KIPS	Y-SHEAR KIPS	X-MOMENT	Y-MOMENT	Z-MOMENT
										1000-FT-KIPS		
1ST	0.00	-49.8	-9.9	1598	1033	-31.2	-9.6	-1612.5	-937.4	215.9	-277.4	35.6
2ND	12.92	-34.9	-8.7	1320	853	-26.4	-10.1	-1562.7	-927.5	203.9	-256.9	33.4
3RD	23.58	-37.8	-8.0	1391	853	-27.2	-9.4	-1527.8	-918.9	194.0	-240.4	31.5
4TH	34.25	-42.3	-11.3	1461	853	-28.9	-13.3	-1490.0	-910.8	184.3	-224.3	29.6
5TH	44.92	-46.0	-18.2	1461	853	-31.5	-21.3	-1447.7	-899.5	174.6	-208.7	27.7
6TH	55.58	-50.0	-18.3	1461	853	-34.2	-21.5	-1401.8	-881.3	165.1	-193.5	25.7
7TH	66.25	-53.4	-18.9	1461	853	-36.6	-22.1	-1351.8	-863.0	155.8	-178.8	23.7
8TH	76.92	-56.5	-19.6	1461	853	-38.6	-22.9	-1298.3	-844.1	146.7	-164.6	21.6
9TH	87.59	-59.5	-20.2	1461	853	-40.7	-23.7	-1241.9	-824.5	137.8	-151.1	19.4
10TH	98.25	-62.6	-20.9	1461	853	-42.8	-24.5	-1182.3	-804.3	129.1	-138.2	17.2
11TH	108.92	-65.6	-21.2	1461	853	-44.9	-24.9	-1119.8	-783.4	120.7	-125.9	14.8
12TH	119.59	-68.7	-19.6	1461	853	-47.0	-23.0	-1054.1	-762.2	112.4	-114.3	12.4
14TH	130.25	-70.5	-16.1	1461	853	-48.2	-18.8	-985.5	-742.5	104.4	-103.4	9.9
15TH	140.92	-69.2	-22.2	1396	853	-49.6	-26.0	-915.0	-726.5	96.6	-93.3	7.3
16TH	151.59	-63.3	-23.3	1264	853	-50.1	-27.3	-845.8	-704.2	88.9	-83.9	5.0
17TH	162.26	-57.5	-25.2	1131	853	-50.8	-29.5	-782.5	-680.9	81.6	-75.2	3.4
18TH	172.92	-50.3	-26.2	999	853	-50.3	-30.7	-725.0	-655.7	74.4	-67.2	2.2
19TH	183.59	-41.2	-28.5	853	853	-48.3	-33.4	-674.8	-629.5	67.6	-59.7	1.6
20TH	194.26	-41.2	-28.9	853	853	-48.3	-33.9	-633.5	-601.0	61.0	-52.7	1.6
21ST	204.92	-41.3	-29.0	853	853	-48.4	-34.0	-592.4	-572.1	54.7	-46.2	1.5
22ND	215.59	-41.4	-29.1	853	853	-48.5	-34.1	-551.1	-543.1	48.8	-40.1	1.4
23RD	226.26	-41.4	-29.1	853	853	-48.6	-34.1	-509.7	-514.0	43.2	-34.4	1.4
24TH	236.92	-41.5	-29.2	853	853	-48.7	-34.2	-468.3	-484.9	37.8	-29.2	1.3
25TH	247.59	-41.6	-29.7	853	853	-48.7	-34.8	-426.7	-455.7	32.8	-24.4	1.2
26TH	258.26	-41.4	-30.8	853	853	-48.5	-36.1	-385.2	-426.0	28.1	-20.1	1.2
27TH	268.92	-41.1	-31.9	853	853	-48.2	-37.3	-343.8	-395.2	23.7	-16.2	1.1
28TH	279.59	-40.9	-32.9	853	853	-48.0	-38.6	-302.7	-363.3	19.7	-12.8	1.0
29TH	290.26	-40.7	-34.0	853	853	-47.7	-39.8	-261.7	-330.4	16.0	-9.8	1.0
30TH	300.93	-40.5	-35.0	853	853	-47.5	-41.0	-221.0	-296.4	12.6	-7.2	1.0
31ST	311.59	-40.3	-35.6	853	853	-47.2	-41.7	-180.5	-261.4	9.7	-5.0	.9
32ND	322.26	-38.2	-36.3	853	853	-44.7	-42.5	-140.3	-225.8	7.1	-3.3	.9
33RD	332.93	-33.0	-39.3	767	853	-43.0	-46.0	-102.1	-189.5	4.9	-2.0	.8
34TH	343.59	-27.2	-39.7	592	853	-46.0	-46.5	-69.1	-150.2	3.0	-1.1	.7
35TH	354.26	-38.2	-84.6	678	1820	-56.4	-46.5	-41.8	-110.5	1.7	-.5	.4
PARA	377.01	-3.6	-25.9	49	639	-73.5	-40.5	-3.6	-25.9	.1	-.0	-.0

TABLE 7. SHEAR AND MOMENT DIAGRAMS : 1221 BRICKELL BUILDING

WIND DIRECTION 340 CONFIGURATION A REFERENCE PRESSURE 48.0 PSF GUST FACTOR 1.32

FLOOR	HEIGHT FT	X-FORCE KIPS	Y-FORCE KIPS	X-AREA SQ FT	Y-AREA SQ FT	X-PRESS PSF	Y-PRESS PSF	X-SHEAR KIPS	Y-SHEAR KIPS	X-MOMENT	Y-MOMENT 1000-FT-KIPS	Z-MOMENT
1ST	0.00	-52.6	-19.5	1598	1033	-32.9	-18.9	-1517.3	-793.8	167.1	-271.2	30.7
2ND	12.92	-34.8	-15.7	1320	853	-26.4	-18.4	-1464.7	-774.3	156.9	-251.9	28.7
3RD	23.58	-37.3	-14.4	1391	853	-26.8	-16.9	-1429.9	-758.6	148.8	-236.5	27.2
4TH	34.25	-41.0	-13.4	1461	853	-28.1	-15.7	-1392.7	-744.1	140.7	-221.5	25.7
5TH	44.92	-42.9	-17.1	1461	853	-29.4	-20.1	-1351.7	-730.8	132.9	-206.8	24.2
6TH	55.58	-45.1	-17.4	1461	853	-30.9	-20.4	-1308.7	-713.6	125.2	-192.6	22.7
7TH	66.25	-47.0	-18.1	1461	853	-32.2	-21.2	-1263.6	-696.2	117.7	-178.9	21.2
8TH	76.92	-48.6	-19.0	1461	853	-33.3	-22.2	-1216.6	-678.1	110.3	-165.7	19.7
9TH	87.59	-50.2	-19.8	1461	853	-34.4	-23.2	-1168.0	-659.2	103.2	-153.0	18.0
10TH	98.25	-51.8	-20.6	1461	853	-35.4	-24.2	-1117.8	-639.4	96.3	-140.8	16.3
11TH	108.92	-53.4	-21.1	1461	853	-36.5	-24.8	-1066.0	-618.8	89.6	-129.1	14.5
12TH	119.59	-55.0	-20.2	1461	853	-37.6	-23.7	-1012.6	-597.6	83.1	-118.0	12.6
14TH	130.25	-58.0	-19.1	1461	853	-39.7	-22.4	-957.6	-577.4	76.8	-107.5	10.6
15TH	140.92	-58.0	-22.1	1396	853	-41.6	-25.9	-899.6	-558.3	70.7	-97.6	8.5
16TH	151.59	-53.3	-22.8	1264	853	-42.2	-26.7	-841.6	-536.2	64.9	-88.3	6.6
17TH	162.26	-49.0	-23.9	1131	853	-43.4	-28.0	-788.3	-513.4	59.3	-79.6	5.2
18TH	172.92	-43.7	-24.4	999	853	-43.8	-28.6	-739.2	-489.5	54.0	-71.5	4.3
19TH	183.59	-37.6	-25.1	853	853	-44.0	-29.4	-695.5	-465.1	48.9	-63.8	3.8
20TH	194.26	-37.9	-24.6	853	853	-44.4	-28.8	-657.9	-440.0	44.0	-56.6	3.7
21ST	204.92	-38.8	-23.7	853	853	-45.4	-27.8	-620.0	-415.5	39.5	-49.8	3.6
22ND	215.59	-39.7	-23.0	853	853	-46.5	-26.9	-581.3	-391.7	35.2	-43.4	3.4
23RD	226.26	-40.5	-22.2	853	853	-47.5	-26.0	-541.6	-368.8	31.1	-37.4	3.3
24TH	236.92	-41.4	-21.4	853	853	-48.6	-25.1	-501.1	-346.6	27.3	-31.8	3.1
25TH	247.59	-42.2	-21.3	853	853	-49.5	-24.9	-459.6	-325.2	23.7	-26.7	2.9
26TH	258.26	-42.7	-21.8	853	853	-50.0	-25.5	-417.4	-303.9	20.4	-22.0	2.8
27TH	268.92	-43.1	-22.3	853	853	-50.5	-26.2	-374.7	-282.1	17.2	-17.8	2.6
28TH	279.59	-43.5	-22.9	853	853	-51.0	-26.8	-331.6	-259.8	14.3	-14.1	2.4
29TH	290.26	-43.9	-23.4	853	853	-51.4	-27.4	-288.2	-236.9	11.7	-10.8	2.2
30TH	300.93	-44.3	-23.9	853	853	-51.9	-28.0	-244.2	-213.5	9.3	-7.9	2.0
31ST	311.59	-44.7	-24.5	853	853	-52.4	-28.7	-199.9	-189.6	7.1	-5.5	1.8
32ND	322.26	-42.5	-25.7	853	853	-49.8	-30.1	-155.2	-165.1	5.2	-3.6	1.7
33RD	332.93	-37.1	-27.7	767	853	-48.4	-32.5	-112.7	-139.4	3.6	-2.2	1.4
34TH	343.59	-30.5	-28.7	592	853	-51.6	-33.6	-75.6	-111.7	2.3	-1.2	1.2
35TH	354.26	-41.4	-63.4	678	1820	-61.1	-34.9	-45.1	-83.0	1.2	-.6	.8
PARA	377.01	-3.7	-19.6	49	639	-75.6	-30.7	-3.7	-19.6	.1	-.0	.0

TABLE 7. SHEAR AND MOMENT DIAGRAMS : 1221 BRICKELL BUILDING
WIND DIRECTION 350 CONFIGURATION A REFERENCE PRESSURE 48.0 PSF GUST FACTOR 1.32

FLOOR	HEIGHT FT	X-FORCE KIPS	Y-FORCE KIPS	X-AREA SQ FT	Y-AREA SQ FT	X-PRESS PSF	Y-PRESS PSF	X-SHEAR KIPS	Y-SHEAR KIPS	X-MOMENT	Y-MOMENT 1000-FT-KIPS	Z-MOMENT
1ST	0.00	-45.6	-10.3	1598	1033	-28.6	-10.0	-1386.0	-466.3	91.3	-257.5	27.1
2ND	12.92	-31.6	-8.3	1320	853	-23.9	-9.7	-1340.3	-456.0	85.3	-239.9	25.5
3RD	23.58	-32.3	-6.8	1391	853	-23.2	-8.0	-1308.7	-447.7	80.5	-225.8	24.2
4TH	34.25	-34.0	-6.6	1461	853	-23.3	-7.8	-1276.5	-440.9	75.8	-212.0	23.0
5TH	44.92	-34.5	-11.5	1461	853	-23.6	-13.5	-1242.4	-434.2	71.1	-198.6	21.9
6TH	55.58	-35.1	-12.0	1461	853	-24.0	-14.1	-1208.0	-422.7	66.5	-185.5	20.8
7TH	66.25	-36.5	-13.0	1461	853	-25.0	-15.3	-1172.9	-410.6	62.1	-172.8	19.7
8TH	76.92	-38.6	-14.1	1461	853	-26.4	-16.6	-1136.4	-397.6	57.8	-160.5	18.6
9TH	87.59	-40.7	-15.2	1461	853	-27.9	-17.8	-1097.7	-383.5	53.6	-148.6	17.4
10TH	98.25	-42.8	-16.3	1461	853	-29.3	-19.1	-1057.0	-368.3	49.6	-137.1	16.2
11TH	108.92	-44.9	-17.1	1461	853	-30.7	-20.0	-1014.2	-351.9	45.7	-126.0	14.8
12TH	119.59	-47.0	-16.0	1461	853	-32.2	-18.7	-969.3	-334.9	42.1	-115.4	13.4
14TH	130.25	-50.6	-13.7	1461	853	-34.6	-16.1	-922.2	-318.9	38.6	-105.4	12.0
15TH	140.92	-51.0	-17.8	1396	853	-36.5	-20.8	-871.7	-305.2	35.3	-95.8	10.3
16TH	151.59	-48.5	-18.2	1264	853	-38.4	-21.3	-820.7	-287.4	32.1	-86.8	8.8
17TH	162.26	-46.1	-18.5	1131	853	-40.7	-21.7	-772.2	-269.2	29.1	-78.3	7.7
18TH	172.92	-41.3	-17.6	999	853	-41.3	-20.6	-726.1	-250.7	26.4	-70.3	6.8
19TH	183.59	-36.6	-16.5	853	853	-42.9	-19.4	-684.8	-233.1	23.8	-62.7	6.3
20TH	194.26	-37.4	-15.0	853	853	-43.8	-17.6	-648.2	-216.6	21.4	-55.6	6.0
21ST	204.92	-38.2	-13.8	853	853	-44.8	-16.2	-610.8	-201.5	19.2	-48.9	5.8
22ND	215.59	-39.1	-12.7	853	853	-45.8	-14.9	-572.6	-187.7	17.1	-42.6	5.5
23RD	226.26	-40.0	-11.6	853	853	-46.9	-13.6	-533.5	-175.0	15.1	-36.7	5.3
24TH	236.92	-40.9	-10.4	853	853	-47.9	-12.2	-493.5	-163.5	13.3	-31.2	5.0
25TH	247.59	-41.7	-9.8	853	853	-48.8	-11.5	-452.6	-153.0	11.7	-26.2	4.7
26TH	258.26	-42.1	-9.8	853	853	-49.3	-11.5	-411.0	-143.2	10.1	-21.6	4.4
27TH	268.92	-42.5	-9.7	853	853	-49.9	-11.4	-368.9	-133.4	8.6	-17.4	4.1
28TH	279.59	-43.0	-9.7	853	853	-50.4	-11.4	-326.3	-123.7	7.2	-13.7	3.8
29TH	290.26	-43.4	-9.7	853	853	-50.9	-11.3	-283.3	-114.0	6.0	-10.5	3.5
30TH	300.93	-43.8	-9.6	853	853	-51.4	-11.3	-239.9	-104.3	4.8	-7.7	3.2
31ST	311.59	-44.3	-10.1	853	853	-51.9	-11.8	-196.1	-94.7	3.7	-5.3	2.9
32ND	322.26	-42.8	-11.1	853	853	-50.1	-13.0	-151.8	-84.6	2.8	-3.5	2.6
33RD	332.93	-37.1	-13.9	767	853	-48.3	-16.3	-109.0	-73.5	1.9	-2.1	2.3
34TH	343.59	-29.9	-15.0	592	853	-50.5	-17.6	-72.0	-59.6	1.2	-1.1	1.8
35TH	354.26	-38.9	-34.1	678	1820	-57.5	-18.7	-42.0	-44.6	.7	-.5	1.3
PARA	377.01	-3.1	-10.5	49	639	-62.8	-16.5	-3.1	-10.5	.0	-.0	.1

TABLE 7. 1221 BRICKELL BUILDING

PROJECT 7460 CONFIGURATION A
SCALE = 300 REF. PRESSURE = 48.0
GUST FACTOR = 1.32 STANDARD FLOOR HEIGHT = 10.67
NUMBER OF SIDES = 4 NO. OF FLOORS = 35

SIDE	ANGLE	Z-AXIS
1	0.0	1.600
2	90.0	1.600
3	180.0	3.880
4	270.0	1.600

FLOOR #	LABEL	HEIGHT-FT
1	1ST	12.92
2	2ND	10.67
3	3RD	10.67
4	4TH	10.67
5	5TH	10.67
6	6TH	10.67
7	7TH	10.67
8	8TH	10.67
9	9TH	10.67
10	10TH	10.67
11	11TH	10.67
12	12TH	10.67
13	14TH	10.67
14	15TH	10.67
15	16TH	10.67
16	17TH	10.67
17	18TH	10.67
18	19TH	10.67
19	20TH	10.67
20	21ST	10.67
21	22ND	10.67
22	23RD	10.67
23	24TH	10.67
24	25TH	10.67
25	26TH	10.67
26	27TH	10.67
27	28TH	10.67
28	29TH	10.67
29	30TH	10.67
30	31ST	10.67
31	32ND	10.67
32	33RD	10.67
33	34TH	10.67
34	35TH	22.75
35	PARA	7.99

APPENDIX A

PRESSURE DATA

Note: Pressure coefficients are defined in Section 4.3.

Pressure tap designation is explained in Figure 3.

APPENDIX A -- PRESSURE DATA: CONFIGURATION A) 1221 BRICKELL BUILDING

WD	TAP	CPMEAN	CPRMS	CPMAX	CPMIN
0	101	.306	.141	.728	-.179
0	102	.331	.140	.719	-.145
0	103	.167	.128	.542	-.297
0	104	.469	.157	.976	-.029
0	105	.323	.143	.919	-.121
0	106	.135	.099	.449	-.206
0	107	.454	.160	1.141	-.013
0	108	.070	.091	.394	-.250
0	109	.005	.087	.309	-.285
0	110	.404	.132	.790	-.013
0	111	.025	.096	.362	-.295
0	112	.246	.113	.619	-.116
0	113	.402	.140	.827	-.066
0	114	.522	.153	1.042	.077
0	115	.400	.157	1.029	-.083
0	116	.267	.131	.804	-.151
0	117	.032	.091	.321	-.306
0	118	.202	.116	.545	-.157
0	119	.330	.161	.817	-.107
0	120	.456	.175	1.093	.004
0	121	.368	.148	.811	-.062
0	122	.220	.131	.649	-.260
0	123	.279	.161	.902	-.180
0	124	.173	.140	.773	-.274
0	125	-.071	.084	.259	-.515
0	126	.083	.100	.439	-.286
0	127	.183	.139	.708	-.324
0	128	.321	.154	.864	-.084
0	129	.303	.156	.862	-.110
0	130	.231	.147	.769	-.201
0	131	.029	.166	.713	-.638
0	132	.330	.166	.983	-.058
0	133	.335	.174	.963	-.117
0	134	.349	.173	.967	-.088
0	135	.241	.188	.922	-.295
0	136	.059	.147	.653	-.412
0	137	.255	.161	.947	-.179
0	138	.047	.136	.580	-.369
0	139	-.077	.136	.455	-.577
0	140	-.143	.080	.258	-.506
0	141	-.030	.092	.408	-.289
0	142	.128	.111	.656	-.180
0	143	.136	.136	.671	-.224
0	144	.219	.138	.734	-.099
0	145	.181	.140	.940	-.227
0	146	.110	.134	.776	-.246
0	147	-.075	.113	.384	-.390
0	148	-.185	.061	.050	-.491
0	149	-.111	.060	.146	-.336
0	150	-.018	.062	.279	-.237

WD	TAP	CPMEAN	CPRMS	CPMAX	CPMIN
0	151	-.055	.072	.243	-.292
0	152	.025	.070	.337	-.197
0	153	.003	.079	.358	-.250
0	154	-.029	.084	.340	-.338
0	155	-.183	.096	.219	-.587
0	156	-.202	.052	-.025	-.463
0	157	-.131	.043	.077	-.312
0	158	-.120	.043	.044	-.284
0	159	-.002	.082	.357	-.246
0	160	.148	.109	.655	-.154
0	161	.131	.117	.627	-.239
0	162	.168	.118	.668	-.152
0	163	.032	.117	.618	-.314
0	164	-.019	.088	.406	-.376
0	165	-.096	.080	.270	-.430
0	166	-.180	.124	.274	-.717
0	167	-.021	.217	.951	-.903
0	168	-.100	.066	.150	-.400
0	169	.244	.151	.903	-.174
0	170	-.190	.062	.049	-.501
0	171	-.103	.059	.186	-.356
0	172	.158	.140	.726	-.174
0	173	.160	.141	.717	-.159
0	174	-.007	.128	.525	-.346
0	201	-.949	.331	-.072	-2.643
0	202	-.845	.298	.099	-1.801
0	203	-.209	.095	-.015	-.779
0	204	-.201	.051	-.027	-.566
0	205	-.209	.046	-.051	-.477
0	206	-.321	.056	-.132	-.553
0	207	-.830	.233	.040	-1.746
0	208	-.843	.240	-.015	-1.666
0	209	-.319	.222	.231	-1.154
0	210	-.152	.049	.014	-.539
0	211	-.216	.042	-.059	-.377
0	212	-.243	.050	.009	-.431
0	213	-.637	.140	-.161	-1.494
0	214	-.637	.142	.050	-1.570
0	215	-.621	.208	.057	-1.569
0	216	-.303	.172	.075	-1.006
0	217	-.248	.089	.008	-.799
0	218	-.256	.072	.052	-.931
0	219	-.606	.157	-.195	-1.367
0	220	-.633	.168	-.029	-1.552
0	221	-.595	.226	.079	-1.586
0	222	-.363	.191	.113	-1.198
0	223	-.307	.120	.022	-.935
0	224	-.309	.108	.000	-1.134
0	225	-.909	.453	.166	-3.764
0	226	-.614	.243	.075	-1.857

WD	TAP	CPMEAN	CPRMS	CPMAX	CPMIN
0	227	-.451	.208	.019	-1.348
0	228	-.307	.131	-.017	-.975
0	229	-.279	.081	-.076	-.806
0	230	-.281	.072	-.051	-.704
0	231	-.846	.333	.158	-2.524
0	232	-.389	.197	.005	-1.350
0	233	-.324	.149	-.004	-1.121
0	234	-.277	.106	.001	-.967
0	235	-.255	.066	-.030	-.730
0	236	-.689	.216	-.047	-1.707
0	237	-.434	.213	.041	-1.241
0	238	-.265	.114	-.029	-1.000
0	239	-.237	.070	.000	-.747
0	240	-.235	.051	-.049	-.471
0	241	-.625	.195	-.008	-2.004
0	242	-.426	.197	.030	-1.293
0	243	-.280	.124	.052	-1.006
0	244	-.226	.072	-.017	-.826
0	245	-.229	.053	.025	-.811
0	246	-.550	.188	-.143	-1.729
0	247	-.557	.191	.064	-1.359
0	248	-.414	.183	.003	-1.192
0	249	-.273	.115	-.015	-.940
0	250	-.243	.080	-.033	-.715
0	251	-.245	.067	-.084	-.626
0	252	-.488	.158	-.121	-1.147
0	253	-.511	.167	.022	-1.285
0	254	-.467	.179	.000	-1.289
0	255	-.247	.096	.071	-.850
0	256	-.241	.067	-.011	-.595
0	257	-.253	.062	-.036	-.609
0	258	-.487	.174	.023	-1.464
0	259	-.466	.194	.005	-1.447
0	260	-.322	.168	.059	-1.091
0	261	-.226	.085	.058	-.670
0	262	-.224	.062	.091	-.537
0	263	-.243	.056	-.099	-.549
0	264	-.270	.111	.117	-1.042
0	265	-.283	.123	.076	-1.222
0	266	-.187	.090	.243	-1.009
0	267	-.164	.054	.147	-.405
0	268	-.197	.043	-.017	-.357
0	269	-.227	.049	-.060	-.435
0	270	-.751	.269	.050	-1.917
0	271	-.729	.278	.221	-2.765
0	272	-.317	.086	-.053	-.877
0	273	-.349	.090	-.075	-.876
0	274	-.809	.356	-.042	-3.216
0	275	-.713	.295	.059	-1.958
0	276	-.594	.247	.090	-1.538

APPENDIX A -- PRESSURE DATA: CONFIGURATION A: 1221 BRICKELL BUILDING

WD	TAP	CPMEAN	CPRMS	CPMAX	CPMIN
0	277	-.294	.096	-.054	-.858
0	278	-.291	.075	-.046	-.698
0	279	-.338	.093	-.047	-.896
0	280	-.603	.236	.090	-1.528
0	281	-.292	.103	-.000	-.846
0	282	-.770	.257	.072	-2.605
0	283	-.538	.257	.050	-1.634
0	284	-.240	.080	.032	-.802
0	285	-.245	.062	-.033	-.686
0	301	-.278	.073	-.035	-.638
0	302	-.283	.072	-.042	-.652
0	303	-.274	.067	-.056	-.545
0	304	-.280	.067	-.062	-.551
0	305	-.282	.072	-.065	-.726
0	306	-.285	.059	-.096	-.530
0	307	-.321	.069	-.096	-.595
0	308	-.303	.058	-.100	-.514
0	309	-.321	.073	-.062	-.650
0	310	-.329	.074	-.084	-.650
0	311	-.293	.069	-.096	-.988
0	312	-.299	.065	-.111	-.813
0	313	-.291	.058	-.103	-.537
0	314	-.296	.054	-.099	-.511
0	315	-.308	.056	-.126	-.534
0	316	-.311	.063	-.100	-.640
0	317	-.339	.086	-.058	-1.357
0	318	-.325	.079	-.094	-1.151
0	319	-.326	.062	-.132	-.620
0	320	-.306	.047	-.156	-.512
0	321	-.328	.051	-.158	-.519
0	322	-.329	.060	-.160	-.634
0	323	-.430	.183	-.130	-1.497
0	324	-.366	.116	-.114	-1.165
0	325	-.311	.064	-.110	-.641
0	326	-.294	.056	-.125	-.512
0	327	-.303	.051	-.144	-.564
0	328	-.310	.048	-.144	-.517
0	329	-.355	.063	-.123	-.630
0	330	-.368	.073	-.106	-.728
0	331	-.255	.060	-.054	-.604
0	332	-.261	.056	-.111	-.584
0	333	-.272	.053	-.135	-.516
0	334	-.274	.051	-.132	-.522
0	335	-.279	.047	-.119	-.457
0	336	-.241	.052	-.079	-.449
0	337	-.260	.055	-.096	-.503
0	338	-.257	.050	-.106	-.458
0	339	-.249	.059	-.085	-.519
0	340	-.263	.062	-.111	-.545
0	341	-.280	.060	-.142	-.539
0	342	-.279	.059	-.134	-.515
0	343	-.295	.058	-.150	-.562
0	344	-.290	.052	-.125	-.561
0	345	-.348	.068	-.117	-.641
0	346	-.398	.082	-.116	-.691
0	347	-.423	.098	-.132	-.940
0	348	-.273	.070	-.102	-.869
0	349	-.296	.069	-.126	-.762
0	350	-.311	.079	-.148	-.688
0	351	-.279	.080	-.043	-.631
0	352	-.255	.055	-.023	-.554
0	353	-.314	.080	-.069	-.712
0	354	-.334	.090	-.087	-.834
0	355	-.329	.092	-.083	-.965
0	356	-.327	.100	-.034	-1.069
0	357	-.335	.099	-.074	-1.091
0	358	-.337	.101	-.045	-.806
0	359	-.240	.074	-.030	-.645
0	360	-.282	.081	-.100	-.701
0	361	-.306	.085	-.112	-.755
0	362	-.304	.095	-.066	-.747
0	363	-.248	.081	-.015	-.643
0	364	-.230	.086	-.009	-.780
0	365	-.301	.079	-.003	-.723
0	366	-.231	.068	-.031	-.576
0	367	-.230	.067	.015	-.622
0	368	-.227	.066	-.023	-.543
0	369	-.254	.067	.017	-.614
0	370	-.326	.097	-.061	-.848
0	371	-.331	.102	-.010	-.875
0	372	-.226	.051	-.083	-.488
0	373	-.237	.057	-.064	-.528
0	374	-.236	.058	-.062	-.529
0	401	-.336	.117	.027	-.794
0	402	-.368	.135	.085	-1.117
0	403	-.376	.124	-.020	-1.083
0	404	-.393	.107	-.062	-1.100
0	405	-.385	.099	-.127	-.954
0	406	-.309	.101	.046	-.711
0	407	-.378	.096	-.134	-.904
0	408	-.319	.092	-.012	-.716
0	409	-.362	.110	.058	-.949
0	410	-.393	.118	-.065	-.994
0	411	-.389	.110	-.144	-1.034
0	412	-.393	.097	-.151	-1.030
0	413	-.358	.101	-.062	-.841
0	414	-.375	.105	-.041	-.889
0	415	-.388	.110	-.109	-1.284
0	416	-.395	.102	-.167	-1.350
0	417	-.363	.091	-.127	-1.278
0	418	-.379	.125	.017	-1.115
0	419	-.361	.100	-.018	-.892
0	420	-.381	.099	-.130	-1.059
0	421	-.359	.088	-.153	-.961
0	422	-.350	.076	-.137	-.907
0	423	-.381	.131	-.071	-1.292
0	424	-.375	.110	-.019	-1.096
0	425	-.349	.095	.026	-.933
0	426	-.334	.074	-.130	-.720
0	427	-.325	.063	-.117	-.647
0	428	-.319	.061	-.089	-.689
0	429	-.423	.136	.024	-1.239
0	430	-.375	.113	.002	-1.398
0	431	-.346	.080	-.067	-.756
0	432	-.339	.069	-.145	-.699
0	433	-.317	.062	-.135	-.620
0	434	-.356	.062	-.173	-.654
0	435	-.442	.153	-.031	-1.478
0	436	-.442	.137	.036	-1.345
0	437	-.392	.099	.007	-1.189
0	438	-.395	.083	-.131	-.961
0	439	-.342	.071	-.152	-.695
0	440	-.339	.066	-.147	-.637
0	441	-.470	.155	.004	-1.603
0	442	-.516	.151	.022	-1.832
0	443	-.459	.110	-.007	-.969
0	444	-.439	.092	-.152	-1.129
0	445	-.412	.082	-.132	-.857
0	446	-.452	.083	-.169	-.866
0	447	-.484	.142	-.099	-1.500
0	448	-.473	.126	-.047	-1.131
0	449	-.484	.126	-.044	-1.254
0	450	-.541	.114	-.202	-1.125
0	451	-.489	.102	-.235	-.989
0	452	-.485	.107	-.207	-1.117
0	453	-.240	.058	.014	-.534
0	454	-.269	.075	-.028	-.685
0	455	-.223	.109	.076	-.739
0	456	-.401	.174	.066	-1.124
0	457	-.486	.181	.028	-1.629
0	458	-.575	.247	-.164	-2.565
0	459	-.339	.144	-.029	-1.141
0	460	-.370	.139	-.053	-1.256
0	461	-.220	.060	-.059	-.535
0	462	-.289	.112	-.020	-1.041
0	463	-.210	.050	-.016	-.473
0	464	-.304	.097	-.043	-.838
0	465	-.231	.065	.017	-.506
0	466	.030	.109	.590	-.491
0	467	-.228	.062	-.022	-.575

APPENDIX A -- PRESSURE DATA: CONFIGURATION A; 1221 BRICKELL BUILDING

WD	TAP	CPMEAN	CPRMS	CPMAX	CPMIN
0	468	-.220	062	-.067	-.552
0	469	-.267	088	-.040	-.751
0	470	-.349	.125	-.039	-1.089
0	471	-.357	.150	.138	-1.242
0	472	.113	.146	.706	-.296
0	501	-.277	.091	.008	-.845
0	502	-.348	.160	.016	-1.027
0	503	-.705	.284	.036	-2.058
0	504	-.223	.057	-.072	-.518
0	505	-.202	.084	.041	-.697
0	506	-.195	.073	.088	-.522
0	507	-.268	.082	-.047	-.725
0	508	-.257	.085	-.007	-.698
0	509	-.171	.053	.069	-.465
0	510	-.326	.101	-.082	-.692
0	9124	.154	.155	.695	-.290
0	9140	-.165	.084	.195	-.494
0	9213	-.619	.139	-.214	-1.417
0	9218	-.256	.075	-.005	-.809
0	9317	-.365	.086	-.092	-.861
0	9322	-.330	.064	-.128	-.596
0	9348	-.277	.069	-.119	-.774
0	9355	-.309	.083	-.077	-.673
10	101	.214	.130	.632	-.302
10	102	.265	.132	.628	-.256
10	103	.150	.130	.541	-.406
10	104	.390	.146	.849	-.165
10	105	.243	.135	.644	-.223
10	106	.155	.115	.547	-.440
10	107	.440	.172	.975	-.188
10	108	.109	.110	.485	-.345
10	109	.046	.103	.386	-.315
10	110	.421	.150	.872	-.086
10	111	.080	.116	.569	-.309
10	112	.296	.135	.837	-.127
10	113	.452	.146	.901	-.006
10	114	.516	.151	.924	.054
10	115	.340	.147	.947	-.110
10	116	.189	.121	.715	-.266
10	117	.072	.119	.515	-.358
10	118	.240	.144	.725	-.191
10	119	.340	.184	.890	-.219
10	120	.406	.182	.954	-.094
10	121	.275	.155	.804	-.141
10	122	.122	.133	.588	-.288
10	123	.170	.172	.771	-.273
10	124	.070	.148	.588	-.357
10	125	-.029	.113	.450	-.396
10	126	.121	.126	.628	-.251
10	127	.197	.155	.807	-.247

WD	TAP	CPMEAN	CPRMS	CPMAX	CPMIN
10	128	.287	.158	.902	-.195
10	129	.226	.159	.923	-.196
10	130	.146	.143	.787	-.267
10	131	-.052	.156	.515	-.717
10	132	.295	.183	1.125	-.507
10	133	.247	.159	.838	-.196
10	134	.260	.157	.829	-.156
10	135	.143	.174	.873	-.387
10	136	-.015	.129	.471	-.538
10	137	.152	.150	.707	-.245
10	138	-.013	.126	.577	-.383
10	139	-.119	.127	.401	-.525
10	140	-.115	.089	.466	-.474
10	141	-.020	.104	.553	-.293
10	142	.098	.119	.623	-.191
10	143	.079	.136	.690	-.231
10	144	.152	.135	.802	-.216
10	145	.131	.137	.700	-.229
10	146	.075	.136	.711	-.364
10	147	-.090	.118	.420	-.459
10	148	-.156	.064	.117	-.411
10	149	-.102	.055	.240	-.327
10	150	-.039	.054	.258	-.200
10	151	-.089	.066	.235	-.278
10	152	-.012	.069	.379	-.205
10	153	-.036	.066	.233	-.227
10	154	-.058	.071	.218	-.262
10	155	-.191	.083	.211	-.459
10	156	-.158	.054	.032	-.479
10	157	-.113	.039	.095	-.295
10	158	-.095	.039	.084	-.269
10	159	-.007	.078	.375	-.209
10	160	.120	.105	.727	-.320
10	161	.122	.105	.659	-.211
10	162	.145	.104	.554	-.098
10	163	.020	.101	.460	-.233
10	164	-.015	.072	.300	-.322
10	165	-.093	.058	.165	-.279
10	166	-.072	.123	.362	-.475
10	167	.058	.198	.811	-.568
10	168	-.057	.066	.220	-.341
10	169	.186	.140	.901	-.103
10	170	-.147	.070	.228	-.452
10	171	-.161	.061	.170	-.399
10	172	.110	.137	.655	-.302
10	173	.113	.138	.684	-.276
10	174	-.041	.123	.492	-.509
10	201	-.696	.245	-.175	-2.017
10	202	-.806	.242	-.243	-1.999
10	203	-.484	.160	-.104	-1.094

WD	TAP	CPMEAN	CPRMS	CPMAX	CPMIN
10	204	-.319	.121	.120	-.999
10	205	-.248	.090	.126	-.628
10	206	-.331	.090	.007	-.679
10	207	-.712	.226	-.174	-1.788
10	208	-.725	.254	-.165	-1.982
10	209	-.650	.201	.081	-1.400
10	210	-.343	.148	.146	-.998
10	211	-.274	.103	.186	-.819
10	212	-.282	.104	.092	-1.056
10	213	-.560	.163	-.130	-1.579
10	214	-.558	.161	-.132	-1.323
10	215	-.600	.180	.019	-1.473
10	216	-.501	.197	.088	-1.307
10	217	-.417	.186	.151	-1.086
10	218	-.418	.211	.126	-1.386
10	219	-.602	.186	-.075	-1.661
10	220	-.598	.198	-.103	-1.646
10	221	-.618	.213	.046	-1.731
10	222	-.489	.206	.001	-1.299
10	223	-.420	.183	.038	-1.285
10	224	-.427	.204	.079	-1.375
10	225	-.819	.438	-.013	-3.278
10	226	-.623	.249	.054	-2.367
10	227	-.543	.205	.116	-1.442
10	228	-.417	.181	.050	-1.348
10	229	-.336	.136	.126	-1.321
10	230	-.306	.115	.070	-1.063
10	231	-.855	.353	.029	-2.504
10	232	-.483	.191	.075	-1.289
10	233	-.434	.175	-.074	-1.166
10	234	-.354	.147	.023	-1.256
10	235	-.280	.101	.017	-.842
10	236	-.700	.213	-.148	-1.839
10	237	-.462	.197	.001	-1.475
10	238	-.313	.117	.005	-1.141
10	239	-.272	.091	-.002	-.762
10	240	-.234	.069	-.033	-.648
10	241	-.633	.202	-.137	-1.565
10	242	-.445	.170	-.026	-1.316
10	243	-.312	.115	.036	-1.089
10	244	-.243	.077	-.031	-.661
10	245	-.211	.055	-.025	-.520
10	246	-.489	.153	-.035	-1.467
10	247	-.506	.159	.045	-1.341
10	248	-.406	.163	.083	-1.509
10	249	-.278	.121	.095	-1.088
10	250	-.230	.090	-.020	-.908
10	251	-.223	.074	-.014	-.689
10	252	-.474	.143	-.134	-1.220
10	253	-.495	.152	-.036	-1.213

APPENDIX A -- PRESSURE DATA: CONFIGURATION A: 1221 BRICKELL BUILDING

WD	TAP	CPMEAN	CPRMS	CPMAX	CPMIN
10	254	-.433	.164	.040	-1.322
10	255	-.279	.113	.168	-.922
10	256	-.226	.076	.030	-.639
10	257	-.228	.076	-.034	-1.302
10	258	-.412	.165	.001	-2.362
10	259	-.407	.176	.000	-2.635
10	260	-.321	.147	.249	-1.009
10	261	-.227	.089	.048	-.720
10	262	-.198	.063	.059	-.574
10	263	-.205	.052	-.077	-.487
10	264	-.279	.125	.000	-1.462
10	265	-.293	.137	.001	-1.504
10	266	-.202	.111	.425	-1.184
10	267	-.154	.061	.290	-.454
10	268	-.164	.042	.034	-.343
10	269	-.185	.043	-.039	-.400
10	270	-.694	.278	-.070	-2.889
10	271	-.706	.302	-.029	-2.310
10	272	-.377	.152	.123	-.975
10	273	-.484	.167	-.024	-1.467
10	274	-.741	.383	-.037	-3.114
10	275	-.722	.313	.013	-2.476
10	276	-.666	.261	.013	-1.802
10	277	-.463	.159	.018	-1.071
10	278	-.338	.122	.007	-.988
10	279	-.350	.136	-.010	-1.278
10	280	-.613	.238	-.015	-1.752
10	281	-.449	.162	-.056	-1.152
10	282	-.829	.291	-.054	-2.334
10	283	-.521	.232	-.008	-1.466
10	284	-.288	.117	.033	-.861
10	285	-.346	.102	-.042	-.879
10	301	-.291	.091	.007	-.720
10	302	-.295	.088	.012	-.734
10	303	-.291	.090	-.031	-.686
10	304	-.296	.088	-.041	-.691
10	305	-.299	.089	-.013	-.767
10	306	-.300	.078	-.089	-.844
10	307	-.337	.098	-.013	-.785
10	308	-.383	.081	-.118	-.789
10	309	-.338	.113	.027	-.966
10	310	-.352	.118	.019	-1.063
10	311	-.320	.106	-.024	-.814
10	312	-.313	.094	-.050	-.778
10	313	-.294	.074	-.109	-.688
10	314	-.299	.067	-.061	-.635
10	315	-.319	.089	.004	-.830
10	316	-.310	.104	.014	-.889
10	317	-.338	.120	.037	-1.033
10	318	-.317	.102	-.049	-.928

WD	TAP	CPMEAN	CPRMS	CPMAX	CPMIN
10	319	-.281	.071	-.087	-.712
10	320	-.262	.057	-.092	-.523
10	321	-.288	.078	-.054	-.702
10	322	-.303	.095	-.052	-.731
10	323	-.337	.140	-.071	-1.450
10	324	-.295	.090	-.089	-1.000
10	325	-.267	.067	-.066	-.613
10	326	-.255	.060	-.098	-.543
10	327	-.250	.055	-.113	-.553
10	328	-.263	.061	-.085	-.541
10	329	-.303	.092	.042	-.629
10	330	-.322	.112	.053	-.771
10	331	-.234	.073	-.023	-.557
10	332	-.238	.069	-.043	-.527
10	333	-.230	.059	-.063	-.486
10	334	-.235	.056	-.082	-.490
10	335	-.233	.057	-.095	-.599
10	336	-.198	.058	-.032	-.532
10	337	-.207	.060	-.063	-.530
10	338	-.209	.058	-.086	-.543
10	339	-.204	.062	-.049	-.743
10	340	-.223	.075	-.043	-1.023
10	341	-.232	.073	-.097	-.939
10	342	-.232	.065	-.112	-.764
10	343	-.229	.059	-.069	-.599
10	344	-.233	.056	-.078	-.553
10	345	-.297	.087	-.008	-.809
10	346	-.320	.105	-.077	-.880
10	347	-.346	.124	-.029	-.884
10	348	-.223	.067	-.078	-.751
10	349	-.239	.066	-.099	-.704
10	350	-.248	.077	-.058	-.659
10	351	-.207	.057	.011	-.511
10	352	-.215	.054	-.055	-.569
10	353	-.285	.079	-.023	-.740
10	354	-.284	.093	-.100	-1.000
10	355	-.258	.088	-.058	-.860
10	356	-.280	.089	-.101	-.933
10	357	-.279	.085	-.101	-.823
10	358	-.300	.099	.002	-.931
10	359	-.208	.067	.019	-.560
10	360	-.215	.064	-.066	-.543
10	361	-.232	.067	-.086	-.597
10	362	-.231	.078	-.070	-.659
10	363	-.202	.056	-.005	-.459
10	364	-.196	.057	-.023	-.497
10	365	-.293	.075	-.083	-.669
10	366	-.225	.068	-.058	-.490
10	367	-.192	.058	-.020	-.473
10	368	-.190	.058	-.043	-.465

WD	TAP	CPMEAN	CPRMS	CPMAX	CPMIN
10	369	-.210	.059	-.030	-.488
10	370	-.311	.108	-.087	-.976
10	371	-.295	.103	-.061	-.819
10	372	-.189	.061	-.048	-.734
10	373	-.179	.048	-.055	-.452
10	374	-.177	.050	-.046	-.462
10	401	-.316	.118	.079	-.817
10	402	-.351	.123	.097	-.887
10	403	-.443	.129	-.025	-1.037
10	404	-.517	.138	-.135	-1.082
10	405	-.509	.138	-.175	-1.272
10	406	-.387	.116	.077	-.844
10	407	-.507	.140	-.196	-1.312
10	408	-.301	.108	.109	-.780
10	409	-.376	.126	.115	-1.267
10	410	-.474	.135	.130	-1.203
10	411	-.516	.161	-.105	-1.352
10	412	-.504	.158	-.162	-1.493
10	413	-.360	.136	.125	-1.019
10	414	-.418	.128	.081	-.918
10	415	-.475	.139	.054	-1.129
10	416	-.477	.129	-.090	-1.082
10	417	-.436	.113	-.130	-.963
10	418	-.377	.168	.130	-1.125
10	419	-.408	.145	.028	-1.041
10	420	-.454	.146	.033	-1.118
10	421	-.440	.133	.053	-1.005
10	422	-.425	.122	-.111	-1.156
10	423	-.397	.192	.167	-1.290
10	424	-.423	.169	.283	-1.178
10	425	-.410	.162	.145	-1.271
10	426	-.422	.134	.102	-1.150
10	427	-.389	.103	-.109	-1.026
10	428	-.391	.098	-.156	-1.058
10	429	-.485	.212	.139	-1.873
10	430	-.400	.174	.064	-1.371
10	431	-.414	.136	.101	-1.184
10	432	-.417	.123	-.090	-1.261
10	433	-.381	.106	-.109	-1.308
10	434	-.424	.106	-.148	-1.327
10	435	-.465	.213	.060	-1.802
10	436	-.468	.196	.029	-1.439
10	437	-.437	.160	.079	-1.353
10	438	-.477	.144	-.117	-1.496
10	439	-.410	.125	-.124	-1.501
10	440	-.407	.116	-.124	-1.085
10	441	-.451	.221	.131	-1.659
10	442	-.496	.204	.153	-1.339
10	443	-.469	.166	.172	-1.332
10	444	-.468	.158	-.047	-2.100

APPENDIX A -- PRESSURE DATA: CONFIGURATION A; 1221 BRICKELL BUILDING

WD	TAP	CPMEAN	CPRMS	CPMAX	CPMIN
10	445	-.440	.142	-.144	-1.841
10	446	-.485	.139	-.197	-1.621
10	447	-.309	.128	-.009	-.993
10	448	-.341	.142	.040	-.938
10	449	-.380	.167	.079	-1.155
10	450	-.531	.190	-.051	-1.565
10	451	-.505	.168	-.167	-1.573
10	452	-.500	.168	-.063	-1.517
10	453	-.216	.051	-.095	-.455
10	454	-.232	.047	-.101	-.456
10	455	-.155	.052	.098	-.508
10	456	-.241	.148	.141	-.932
10	457	-.372	.194	.091	-1.459
10	458	-.475	.239	.003	-2.198
10	459	-.244	.087	-.070	-.877
10	460	-.237	.134	.110	-1.109
10	461	-.180	.044	-.037	-.410
10	462	-.235	.090	-.017	-.795
10	463	-.189	.042	-.011	-.416
10	464	-.230	.084	.065	-.651
10	465	-.217	.057	-.075	-.522
10	466	.013	.125	.604	-.576
10	467	-.222	.056	-.056	-.508
10	468	-.215	.051	-.073	-.403
10	469	-.215	.074	-.024	-.655
10	470	-.356	.115	-.050	-.936
10	471	-.222	.170	.276	-1.019
10	472	.098	.124	.686	-.349
10	501	-.332	.141	-.029	-1.045
10	502	-.458	.188	.063	-1.289
10	503	-.676	.305	-.054	-2.195
10	504	-.228	.055	-.028	-.439
10	505	-.150	.076	.063	-.751
10	506	-.243	.074	.070	-.524
10	507	-.208	.053	-.037	-.546
10	508	-.170	.067	.017	-.553
10	509	-.161	.041	.029	-.348
10	510	-.206	.091	.018	-.641
10	9124	.048	.140	.518	-.407
10	9140	-.131	.105	.344	-.520
10	9213	-.540	.149	-.115	-1.080
10	9218	-.398	.196	.218	-1.334
10	9317	-.426	.136	-.040	-.979
10	9322	-.344	.101	-.042	-.893
10	9348	-.231	.071	-.042	-.794
10	9355	-.297	.099	-.090	-.806
20	101	.178	.130	.624	-.409
20	102	.229	.138	.693	-.421
20	103	.129	.143	.656	-.506
20	104	.365	.152	.889	-.164

WD	TAP	CPMEAN	CPRMS	CPMAX	CPMIN
20	105	.221	.142	.746	-.386
20	106	.151	.140	.603	-.329
20	107	.427	.191	.973	-.168
20	108	.112	.142	.622	-.380
20	109	.039	.131	.554	-.395
20	110	.439	.165	.953	-.054
20	111	.078	.138	.607	-.430
20	112	.293	.152	.830	-.143
20	113	.443	.177	1.011	-.096
20	114	.471	.174	.956	-.054
20	115	.278	.160	.737	-.284
20	116	.147	.126	.608	-.298
20	117	.069	.124	.507	-.371
20	118	.236	.140	.656	-.147
20	119	.315	.170	.843	-.126
20	120	.349	.166	.938	-.038
20	121	.205	.141	.655	-.222
20	122	.071	.119	.486	-.333
20	123	.103	.140	.612	-.298
20	124	.017	.122	.458	-.494
20	125	.010	.118	.460	-.431
20	126	.162	.129	.668	-.190
20	127	.220	.156	.867	-.166
20	128	.267	.147	.832	-.075
20	129	.188	.146	.806	-.188
20	130	.103	.132	.696	-.336
20	131	-.099	.151	.517	-.638
20	132	.257	.181	1.081	-.171
20	133	.206	.141	.739	-.132
20	134	.214	.138	.749	-.135
20	135	.083	.152	.666	-.357
20	136	-.055	.107	.322	-.398
20	137	.112	.127	.676	-.227
20	138	-.043	.108	.426	-.444
20	139	-.141	.110	.338	-.674
20	140	-.041	.103	.435	-.417
20	141	.056	.105	.622	-.222
20	142	.145	.110	.636	-.144
20	143	.088	.113	.623	-.248
20	144	.123	.104	.608	-.134
20	145	.069	.101	.563	-.206
20	146	.016	.096	.539	-.260
20	147	-.128	.084	.316	-.369
20	148	-.033	.077	.297	-.368
20	149	-.001	.066	.289	-.238
20	150	.023	.055	.324	-.181
20	151	-.064	.050	.252	-.225
20	152	-.022	.046	.236	-.190
20	153	-.078	.050	.208	-.213
20	154	-.109	.047	.105	-.273

WD	TAP	CPMEAN	CPRMS	CPMAX	CPMIN
20	155	-.221	.051	-.005	-.426
20	156	-.049	.056	.320	-.235
20	157	-.025	.048	.165	-.231
20	158	-.036	.036	.105	-.227
20	159	.073	.077	.420	-.107
20	160	.147	.092	.542	-.113
20	161	.153	.105	.737	-.159
20	162	.164	.101	.656	-.070
20	163	.010	.079	.491	-.185
20	164	-.016	.059	.304	-.171
20	165	-.092	.052	.194	-.310
20	166	.087	.094	.449	-.375
20	167	.134	.144	1.037	-.456
20	168	.033	.065	.290	-.237
20	169	.182	.111	.696	-.044
20	170	-.035	.085	.323	-.518
20	171	-.053	.076	.250	-.374
20	172	.065	.110	.556	-.269
20	173	.070	.111	.539	-.253
20	174	-.076	.104	.382	-.440
20	201	-.461	.139	-.114	-1.199
20	202	-.560	.151	-.171	-1.376
20	203	-.479	.149	-.066	-1.250
20	204	-.397	.144	.039	-1.007
20	205	-.305	.127	.075	-1.058
20	206	-.376	.133	.026	-1.111
20	207	-.437	.138	-.162	-1.175
20	208	-.439	.132	-.122	-1.163
20	209	-.471	.149	-.054	-1.353
20	210	-.419	.144	.014	-1.405
20	211	-.352	.131	.077	-.981
20	212	-.375	.159	.061	-1.145
20	213	-.401	.122	-.112	-1.066
20	214	-.404	.120	-.108	-1.076
20	215	-.427	.135	-.053	-1.268
20	216	-.447	.155	.030	-1.194
20	217	-.467	.185	.156	-1.311
20	218	-.476	.215	.114	-1.920
20	219	-.473	.158	-.048	-1.233
20	220	-.478	.159	-.109	-1.625
20	221	-.510	.170	.061	-1.732
20	222	-.492	.178	.111	-1.258
20	223	-.472	.193	.225	-1.345
20	224	-.488	.228	.222	-1.519
20	225	-.611	.305	-.029	-2.915
20	226	-.519	.213	-.064	-1.671
20	227	-.508	.181	-.023	-1.435
20	228	-.452	.172	.088	-1.205
20	229	-.378	.159	-.015	-1.011
20	230	-.349	.138	-.002	-.907

APPENDIX A -- PRESSURE DATA: CONFIGURATION A: 1221 BRICKELL BUILDING

WD	TAP	CPMEAN	CPRMS	CPMAX	CPMIN
20	231	-.769	.355	-.027	-2.414
20	232	-.495	.178	-.030	-1.347
20	233	-.483	.179	-.001	-1.307
20	234	-.431	.169	-.004	-1.507
20	235	-.348	.145	.024	-1.145
20	236	-.677	.226	-.043	-1.791
20	237	-.418	.165	-.066	-1.161
20	238	-.349	.125	-.022	-1.092
20	239	-.312	.121	.044	-1.099
20	240	-.245	.103	.039	-.891
20	241	-.528	.201	-.096	-1.743
20	242	-.401	.152	.011	-1.145
20	243	-.313	.113	.056	-.972
20	244	-.260	.090	.023	-.717
20	245	-.203	.076	.117	-.710
20	246	-.396	.136	-.100	-1.041
20	247	-.399	.141	-.055	-1.037
20	248	-.380	.147	.015	-1.176
20	249	-.321	.147	.022	-1.066
20	250	-.260	.113	.034	-.961
20	251	-.230	.093	.010	-.724
20	252	-.346	.123	-.072	-1.181
20	253	-.356	.130	-.066	-1.302
20	254	-.379	.137	.063	-.982
20	255	-.282	.112	.105	-.868
20	256	-.233	.092	.048	-.898
20	257	-.233	.102	.017	-.898
20	258	-.279	.110	-.044	-.947
20	259	-.281	.113	.005	-1.113
20	260	-.297	.112	-.010	-1.048
20	261	-.259	.096	.029	-.888
20	262	-.249	.097	.011	-.708
20	263	-.252	.096	-.030	-.877
20	264	-.264	.125	.012	-1.115
20	265	-.272	.134	.010	-1.246
20	266	-.248	.124	.202	-.992
20	267	-.181	.088	.253	-.729
20	268	-.177	.082	.096	-1.121
20	269	-.187	.094	.047	-1.112
20	270	-.562	.209	-.145	-2.118
20	271	-.549	.212	-.082	-1.899
20	272	-.414	.148	.037	-1.163
20	273	-.530	.202	-.083	-2.114
20	274	-.538	.249	-.049	-2.919
20	275	-.544	.230	-.072	-2.094
20	276	-.549	.216	-.058	-1.822
20	277	-.506	.161	-.073	-1.388
20	278	-.382	.135	.072	-.982
20	279	-.388	.171	.045	-1.422
20	280	-.520	.200	.044	-1.656
20	281	-.490	.159	.022	-1.344
20	282	-.822	.344	-.097	-3.094
20	283	-.477	.190	.008	-1.536
20	284	-.344	.141	-.001	-.958
20	285	-.398	.147	-.022	-1.075
20	301	-.308	.111	.007	-.816
20	302	-.298	.103	-.006	-.798
20	303	-.319	.107	.001	-.882
20	304	-.311	.103	-.022	-.780
20	305	-.303	.104	-.017	-.934
20	306	-.296	.087	-.069	-.689
20	307	-.291	.101	-.014	-.975
20	308	-.374	.098	-.078	-.936
20	309	-.291	.116	.025	-.839
20	310	-.296	.118	.040	-.870
20	311	-.328	.097	-.014	-.759
20	312	-.308	.081	-.029	-.678
20	313	-.287	.067	-.086	-.614
20	314	-.283	.084	-.027	-.761
20	315	-.294	.109	.034	-.965
20	316	-.280	.117	.096	-1.181
20	317	-.328	.113	-.003	-.875
20	318	-.296	.090	-.047	-.728
20	319	-.261	.062	-.063	-.646
20	320	-.258	.073	-.065	-.806
20	321	-.279	.102	.013	-.909
20	322	-.289	.119	.053	-.995
20	323	-.298	.098	-.076	-1.031
20	324	-.271	.075	-.067	-1.039
20	325	-.259	.066	-.073	-.564
20	326	-.247	.060	-.080	-.524
20	327	-.227	.052	-.045	-.494
20	328	-.234	.065	-.097	-.694
20	329	-.246	.100	.015	-.967
20	330	-.254	.120	.070	-1.028
20	331	-.256	.089	-.009	-.660
20	332	-.248	.075	-.016	-.568
20	333	-.227	.063	-.071	-.526
20	334	-.225	.054	-.080	-.491
20	335	-.227	.053	-.034	-.452
20	336	-.192	.070	.019	-.575
20	337	-.177	.067	.006	-.972
20	338	-.185	.056	-.010	-.549
20	339	-.176	.069	.024	-.798
20	340	-.191	.072	-.027	-.657
20	341	-.191	.065	-.044	-.699
20	342	-.184	.051	-.064	-.526
20	343	-.187	.043	-.059	-.383
20	344	-.223	.053	-.074	-.496
20	345	-.256	.077	-.077	-.679
20	346	-.236	.083	-.054	-.702
20	347	-.239	.096	.035	-.767
20	348	-.192	.067	-.020	-.729
20	349	-.186	.058	-.014	-.472
20	350	-.166	.049	-.029	-.444
20	351	-.173	.050	.013	-.427
20	352	-.255	.074	.026	-.664
20	353	-.282	.085	-.059	-.798
20	354	-.248	.083	-.094	-.967
20	355	-.229	.089	-.054	-.821
20	356	-.260	.090	-.095	-.836
20	357	-.249	.087	-.091	-.884
20	358	-.306	.101	-.076	-.873
20	359	-.194	.049	-.016	-.416
20	360	-.155	.049	-.027	-.461
20	361	-.159	.050	-.035	-.472
20	362	-.150	.052	-.000	-.547
20	363	-.236	.071	-.005	-.556
20	364	-.193	.048	-.034	-.482
20	365	-.258	.066	-.104	-.627
20	366	-.228	.061	-.071	-.519
20	367	-.190	.052	-.052	-.447
20	368	-.188	.052	-.060	-.473
20	369	-.208	.052	-.064	-.492
20	370	-.266	.093	-.106	-.888
20	371	-.265	.085	-.049	-.949
20	372	-.186	.074	.023	-.841
20	373	-.178	.062	-.000	-.680
20	374	-.174	.062	.018	-.593
20	401	-.305	.114	.093	-.848
20	402	-.309	.124	.047	-.932
20	403	-.403	.144	.022	-1.169
20	404	-.526	.165	.024	-1.204
20	405	-.702	.239	-.099	-1.715
20	406	-.375	.114	.010	-1.061
20	407	-.726	.266	-.215	-2.005
20	408	-.249	.095	.080	-.740
20	409	-.296	.123	.070	-.803
20	410	-.436	.159	.026	-1.033
20	411	-.637	.183	-.027	-1.444
20	412	-.718	.249	-.118	-2.058
20	413	-.283	.126	.105	-1.129
20	414	-.386	.160	.107	-1.008
20	415	-.539	.182	.070	-1.381
20	416	-.619	.176	-.125	-1.362
20	417	-.577	.155	-.162	-1.295
20	418	-.278	.149	.176	-.991
20	419	-.385	.193	.231	-1.148
20	420	-.531	.213	.276	-1.449
20	421	-.609	.200	.035	-1.642

APPENDIX A -- PRESSURE DATA: CONFIGURATION A; 1221 BRICKELL BUILDING

WD	TAP	CPMEAN	CPRMS	CPMAX	CPMIN
20	422	-.619	.181	-.108	-1.471
20	423	-.301	.177	.140	-1.269
20	424	-.337	.173	.181	-1.120
20	425	-.379	.208	.228	-1.286
20	426	-.555	.220	.234	-1.510
20	427	-.560	.178	-.135	-1.543
20	428	-.557	.159	-.178	-1.269
20	429	-.397	.199	.247	-1.658
20	430	-.313	.174	.129	-1.157
20	431	-.458	.196	.242	-1.262
20	432	-.581	.188	.040	-1.416
20	433	-.541	.163	-.033	-1.163
20	434	-.589	.164	-.068	-1.231
20	435	-.393	.226	.202	-1.558
20	436	-.394	.206	.113	-1.833
20	437	-.453	.202	.119	-1.184
20	438	-.592	.207	.024	-1.864
20	439	-.516	.175	-.040	-1.492
20	440	-.527	.173	-.099	-1.397
20	441	-.303	.196	.135	-1.680
20	442	-.359	.189	.073	-1.479
20	443	-.386	.202	.126	-1.534
20	444	-.553	.224	.020	-1.715
20	445	-.551	.200	-.061	-1.449
20	446	-.600	.195	-.124	-1.543
20	447	-.226	.079	-.007	-.661
20	448	-.224	.096	.067	-.916
20	449	-.231	.143	.102	-1.058
20	450	-.481	.243	.059	-1.580
20	451	-.546	.211	.024	-1.532
20	452	-.549	.193	-.128	-1.506
20	453	-.188	.048	-.054	-.422
20	454	-.205	.039	-.094	-.377
20	455	-.119	.031	.024	-.251
20	456	-.100	.073	.108	-.716
20	457	-.231	.160	.056	-1.248
20	458	-.374	.183	.007	-2.209
20	459	-.200	.058	-.020	-.660
20	460	-.095	.094	.176	-.834
20	461	-.145	.036	-.010	-.289
20	462	-.255	.108	-.008	-.761
20	463	-.159	.042	-.007	-.370
20	464	-.165	.105	.212	-.671
20	465	-.228	.061	-.077	-.530
20	466	.139	.126	.741	-.511
20	467	-.232	.060	-.085	-.513
20	468	-.218	.054	-.045	-.443
20	469	-.188	.063	.008	-.525
20	470	-.355	.107	-.104	-.960
20	471	-.020	.153	.439	-.987

WD	TAP	CPMEAN	CPRMS	CPMAX	CPMIN
20	472	.198	.120	.876	-.130
20	501	-.418	.160	-.013	-1.222
20	502	-.480	.170	-.008	-1.446
20	503	-.566	.254	.143	-1.859
20	504	-.232	.055	-.078	-.517
20	505	-.172	.097	.131	-.632
20	506	-.238	.061	-.012	-.529
20	507	-.166	.036	-.040	-.342
20	508	-.112	.052	.074	-.384
20	509	-.145	.036	-.033	-.444
20	510	-.127	.062	.070	-.543
20	9124	.024	.124	.530	-.478
20	9140	-.027	.124	.468	-.429
20	9213	-.397	.115	-.117	-.936
20	9218	-.422	.181	.058	-1.423
20	9317	-.389	.111	-.115	-.966
20	9322	-.314	.123	-.011	-.858
20	9348	-.216	.071	-.030	-.609
20	9355	-.235	.077	-.045	-.630
30	101	.124	.156	.698	-.376
30	102	.189	.168	.739	-.304
30	103	.127	.180	.786	-.438
30	104	.256	.172	.788	-.207
30	105	.110	.147	.571	-.342
30	106	.158	.180	.723	-.341
30	107	.291	.205	1.032	-.247
30	108	.140	.187	.832	-.540
30	109	.119	.189	.801	-.462
30	110	.428	.194	.968	-.190
30	111	.142	.192	.904	-.403
30	112	.310	.194	1.064	-.167
30	113	.342	.195	1.011	-.105
30	114	.319	.174	.958	-.110
30	115	.125	.152	.691	-.315
30	116	.038	.117	.508	-.341
30	117	.105	.155	.695	-.372
30	118	.223	.156	.871	-.274
30	119	.226	.160	.930	-.358
30	120	.215	.136	.781	-.195
30	121	.071	.113	.635	-.232
30	122	-.026	.099	.494	-.376
30	123	-.003	.098	.646	-.277
30	124	-.059	.089	.513	-.397
30	125	.039	.112	.646	-.277
30	126	.135	.106	.702	-.131
30	127	.125	.108	.643	-.135
30	128	.146	.101	.626	-.097
30	129	.080	.110	.630	-.238
30	130	.015	.102	.570	-.267
30	131	-.163	.128	.511	-.585

WD	TAP	CPMEAN	CPRMS	CPMAX	CPMIN
30	132	.102	.158	.823	-.294
30	133	.127	.106	.741	-.211
30	134	.136	.106	.797	-.249
30	135	.010	.122	.729	-.486
30	136	-.088	.098	.450	-.444
30	137	.052	.102	.598	-.268
30	138	-.077	.092	.383	-.542
30	139	-.168	.092	.269	-.604
30	140	.031	.094	.675	-.289
30	141	.095	.090	.519	-.184
30	142	.139	.080	.466	-.094
30	143	.065	.088	.414	-.190
30	144	.091	.089	.459	-.146
30	145	.045	.090	.506	-.196
30	146	-.004	.087	.427	-.302
30	147	-.137	.076	.224	-.408
30	148	.012	.068	.333	-.360
30	149	.025	.057	.310	-.180
30	150	.047	.051	.325	-.138
30	151	-.029	.051	.196	-.173
30	152	.010	.047	.297	-.127
30	153	-.051	.046	.199	-.198
30	154	-.085	.047	.121	-.265
30	155	-.197	.053	-.017	-.415
30	156	-.038	.047	.161	-.268
30	157	-.018	.047	.298	-.189
30	158	-.025	.040	.218	-.161
30	159	.044	.070	.506	-.154
30	160	.074	.084	.579	-.162
30	161	.111	.085	.519	-.153
30	162	.120	.082	.508	-.073
30	163	-.013	.069	.393	-.166
30	164	-.033	.056	.279	-.188
30	165	-.099	.053	.136	-.439
30	166	.054	.080	.427	-.223
30	167	.068	.109	.646	-.327
30	168	.034	.059	.370	-.130
30	169	.144	.092	.666	-.074
30	170	.025	.083	.391	-.312
30	171	.002	.077	.365	-.245
30	172	.028	.098	.481	-.283
30	173	.036	.098	.498	-.271
30	174	-.091	.088	.326	-.429
30	201	-.348	.109	-.071	-1.090
30	202	-.434	.117	-.145	-1.132
30	203	-.363	.121	-.024	-.984
30	204	-.348	.133	-.002	-1.163
30	205	-.301	.124	.024	-1.023
30	206	-.388	.151	-.045	-1.255
30	207	-.339	.104	-.125	-1.152

APPENDIX A -- PRESSURE DATA: CONFIGURATION A: 1221 BRICKELL BUILDING

WD	TAP	CPMEAN	CPRMS	CPMAX	CPMIN
30	208	-.337	.105	-.096	-.901
30	209	-.352	.121	-.053	-.942
30	210	-.328	.120	.031	-1.004
30	211	-.304	.118	.033	-.908
30	212	-.313	.128	.073	-.944
30	213	-.307	.090	-.070	-.789
30	214	-.312	.091	-.078	-.838
30	215	-.326	.104	-.076	-.951
30	216	-.326	.107	.009	-.913
30	217	-.335	.121	.124	-.942
30	218	-.343	.135	.069	-1.023
30	219	-.350	.117	-.007	-1.504
30	220	-.357	.117	-.053	-1.321
30	221	-.377	.129	.046	-1.166
30	222	-.368	.125	-.040	-1.171
30	223	-.364	.129	.010	-.971
30	224	-.377	.158	.030	-1.318
30	225	-.478	.233	.028	-2.147
30	226	-.415	.172	-.011	-1.628
30	227	-.385	.138	.025	-1.072
30	228	-.358	.127	-.017	-1.112
30	229	-.318	.119	.019	-1.053
30	230	-.298	.103	-.038	-.952
30	231	-.513	.245	-.014	-1.882
30	232	-.382	.133	.089	-1.238
30	233	-.374	.132	.043	-1.161
30	234	-.350	.124	.024	-1.092
30	235	-.310	.113	.055	-1.087
30	236	-.470	.193	-.017	-1.776
30	237	-.366	.140	.038	-1.258
30	238	-.318	.117	.034	-1.004
30	239	-.288	.109	.035	-1.095
30	240	-.250	.106	.065	-1.017
30	241	-.407	.168	.014	-1.634
30	242	-.332	.129	.077	-1.052
30	243	-.295	.117	.117	-.943
30	244	-.258	.100	-.003	-1.029
30	245	-.220	.093	.036	-.893
30	246	-.293	.106	-.031	-.828
30	247	-.298	.110	-.022	-.913
30	248	-.302	.117	.037	-1.224
30	249	-.274	.114	.048	-1.021
30	250	-.238	.098	.046	-.661
30	251	-.231	.100	.010	-.807
30	252	-.267	.099	-.006	-.754
30	253	-.274	.104	.004	-.794
30	254	-.326	.121	-.022	-.874
30	255	-.254	.098	.077	-.931
30	256	-.242	.100	.120	-.790
30	257	-.251	.116	.088	-.957
30	258	-.235	.087	.024	-.828
30	259	-.240	.090	.025	-.874
30	260	-.255	.093	.087	-.996
30	261	-.248	.086	.038	-.708
30	262	-.256	.104	.124	-.938
30	263	-.265	.104	-.037	-.928
30	264	-.225	.110	.006	-1.091
30	265	-.229	.119	.011	-1.432
30	266	-.223	.112	.167	-1.164
30	267	-.192	.086	.149	-1.015
30	268	-.191	.084	.092	-.650
30	269	-.200	.100	.043	-.797
30	270	-.464	.150	-.119	-1.719
30	271	-.461	.155	-.075	-1.457
30	272	-.400	.125	-.020	-1.236
30	273	-.508	.175	-.149	-1.576
30	274	-.452	.182	-.102	-1.608
30	275	-.458	.162	-.084	-1.646
30	276	-.462	.149	-.080	-1.257
30	277	-.478	.129	-.100	-1.119
30	278	-.374	.113	-.025	-.826
30	279	-.380	.148	-.050	-1.293
30	280	-.445	.151	.068	-1.602
30	281	-.479	.132	-.095	-1.182
30	282	-.632	.307	-.015	-2.443
30	283	-.441	.155	.043	-1.160
30	284	-.372	.130	.035	-1.516
30	285	-.440	.137	-.071	-1.204
30	301	-.260	.089	.005	-.723
30	302	-.251	.078	-.014	-.673
30	303	-.258	.077	-.055	-.719
30	304	-.249	.070	-.070	-.720
30	305	-.234	.061	-.050	-.661
30	306	-.233	.055	-.064	-.658
30	307	-.217	.053	-.046	-.541
30	308	-.343	.064	-.164	-.746
30	309	-.210	.056	-.019	-.540
30	310	-.211	.056	-.022	-.630
30	311	-.268	.062	-.055	-.546
30	312	-.252	.052	-.073	-.489
30	313	-.235	.049	-.088	-.516
30	314	-.224	.053	-.089	-.717
30	315	-.222	.054	-.041	-.585
30	316	-.243	.062	-.048	-.653
30	317	-.313	.083	-.079	-.728
30	318	-.290	.065	-.101	-.622
30	319	-.259	.051	-.133	-.502
30	320	-.252	.058	-.104	-.820
30	321	-.246	.063	-.083	-.737
30	322	-.242	.066	-.054	-.941
30	323	-.292	.076	-.067	-.837
30	324	-.275	.062	-.043	-.549
30	325	-.269	.061	-.032	-.598
30	326	-.260	.055	-.052	-.489
30	327	-.249	.047	-.122	-.502
30	328	-.236	.049	-.106	-.544
30	329	-.224	.056	-.072	-.610
30	330	-.220	.059	-.049	-.613
30	331	-.296	.082	-.063	-.735
30	332	-.288	.071	-.092	-.655
30	333	-.266	.066	-.103	-.694
30	334	-.253	.053	-.105	-.526
30	335	-.245	.046	-.116	-.444
30	336	-.244	.083	.021	-.736
30	337	-.211	.092	.057	-1.013
30	338	-.214	.066	-.031	-.750
30	339	-.208	.095	.046	-.821
30	340	-.203	.085	.040	-.792
30	341	-.196	.076	-.005	-.891
30	342	-.195	.052	-.056	-.592
30	343	-.225	.050	.008	-.486
30	344	-.254	.064	-.097	-.586
30	345	-.239	.063	-.077	-.913
30	346	-.222	.059	-.059	-.990
30	347	-.214	.055	-.056	-.548
30	348	-.184	.058	.042	-.440
30	349	-.174	.051	.001	-.420
30	350	-.180	.051	-.003	-.450
30	351	-.230	.068	.159	-.497
30	352	-.264	.076	.005	-.861
30	353	-.249	.078	-.101	-.971
30	354	-.228	.076	-.073	-.924
30	355	-.215	.065	.022	-.859
30	356	-.242	.067	-.094	-.792
30	357	-.230	.064	-.079	-.741
30	358	-.282	.086	-.115	-.997
30	359	-.221	.055	-.087	-.486
30	360	-.181	.065	-.009	-.530
30	361	-.178	.060	.030	-.494
30	362	-.192	.059	.065	-.415
30	363	-.283	.074	.026	-.679
30	364	-.215	.052	-.053	-.528
30	365	-.252	.060	-.121	-.681
30	366	-.247	.059	-.082	-.543
30	367	-.215	.058	-.063	-.486
30	368	-.216	.058	-.076	-.447
30	369	-.225	.050	-.081	-.453
30	370	-.281	.079	-.070	-.754
30	371	-.268	.070	-.084	-.664
30	372	-.198	.078	.046	-.947

APPENDIX A -- PRESSURE DATA: CONFIGURATION A: 1221 BRICKELL BUILDING

WD	TAP	CPMEAN	CPRMS	CPMAX	CPMIN
30	373	-.199	.075	.026	-.590
30	374	-.190	.073	.037	-.569
30	401	-.265	.086	.112	-.796
30	402	-.224	.071	.064	-.604
30	403	-.254	.089	.123	-.729
30	404	-.342	.128	.050	-1.203
30	405	-.660	.244	-.003	-1.604
30	406	-.336	.085	.049	-.908
30	407	-.690	.250	.033	-2.110
30	408	-.228	.065	.037	-.576
30	409	-.205	.078	.081	-.803
30	410	-.251	.113	.077	-.841
30	411	-.410	.171	.024	-1.487
30	412	-.570	.174	-.065	-1.602
30	413	-.200	.054	.074	-.489
30	414	-.184	.090	.077	-.697
30	415	-.273	.155	.103	-1.035
30	416	-.477	.197	.075	-1.263
30	417	-.554	.151	-.096	-1.197
30	418	-.189	.055	.011	-.586
30	419	-.165	.085	.058	-1.119
30	420	-.195	.140	.097	-1.078
30	421	-.338	.229	.151	-1.399
30	422	-.707	.239	.040	-1.710
30	423	-.201	.053	-.035	-.561
30	424	-.177	.078	.111	-.829
30	425	-.149	.106	.128	-1.076
30	426	-.291	.251	.188	-1.251
30	427	-.613	.241	.246	-2.059
30	428	-.519	.211	.248	-1.768
30	429	-.242	.076	.024	-1.179
30	430	-.168	.061	.013	-.701
30	431	-.177	.123	.124	-.964
30	432	-.342	.235	.181	-1.314
30	433	-.475	.206	.250	-1.368
30	434	-.535	.184	.250	-1.349
30	435	-.215	.096	.110	-1.187
30	436	-.208	.097	.095	-1.004
30	437	-.210	.147	.109	-.972
30	438	-.391	.231	.127	-1.448
30	439	-.420	.190	.288	-1.596
30	440	-.431	.168	.113	-1.145
30	441	-.186	.080	.044	-.956
30	442	-.231	.089	.019	-.911
30	443	-.199	.133	.200	-.976
30	444	-.307	.205	.252	-1.373
30	445	-.372	.181	.219	-1.232
30	446	-.437	.166	.229	-1.219
30	447	-.181	.043	-.035	-.382
30	448	-.166	.053	.029	-.593

WD	TAP	CPMEAN	CPRMS	CPMAX	CPMIN
30	449	-.130	.086	.159	-.822
30	450	-.265	.201	.144	-1.646
30	451	-.313	.201	.224	-1.249
30	452	-.360	.171	.215	-1.243
30	453	-.164	.036	-.059	-.321
30	454	-.189	.030	-.028	-.381
30	455	-.111	.025	.008	-.294
30	456	-.091	.046	.074	-.517
30	457	-.159	.117	.049	-.900
30	458	-.272	.148	.026	-1.377
30	459	-.194	.053	-.017	-.453
30	460	-.078	.066	.126	-.487
30	461	-.141	.028	-.042	-.272
30	462	-.199	.076	.006	-.757
30	463	-.157	.038	-.004	-.329
30	464	-.129	.079	.160	-.591
30	465	-.249	.065	-.080	-.606
30	466	.161	.115	.740	-.516
30	467	-.253	.064	-.087	-.597
30	468	-.200	.040	-.061	-.401
30	469	-.158	.044	-.035	-.406
30	470	-.271	.084	-.059	-.733
30	471	-.065	.109	.290	-.643
30	472	.148	.099	.700	-.153
30	501	-.420	.136	-.052	-1.068
30	502	-.347	.120	-.008	-1.059
30	503	-.457	.172	-.019	-1.361
30	504	-.199	.037	-.066	-.354
30	505	-.141	.072	.097	-.447
30	506	-.210	.041	-.066	-.387
30	507	-.165	.031	-.011	-.301
30	508	-.104	.036	.069	-.306
30	509	-.133	.026	-.049	-.256
30	510	-.101	.038	.077	-.349
30	9124	-.072	.110	.431	-.501
30	9140	.012	.082	.340	-.339
30	9213	-.315	.102	-.033	-1.196
30	9218	-.332	.138	-.005	-1.131
30	9317	-.328	.075	-.106	-.746
30	9322	-.233	.067	-.073	-.646
30	9348	-.185	.051	-.030	-.417
30	9355	-.202	.054	-.061	-.452
40	101	.118	.116	.521	-.411
40	102	.221	.131	.632	-.314
40	103	.214	.153	.679	-.376
40	104	.248	.137	.713	-.248
40	105	.081	.105	.413	-.316
40	106	.276	.154	.834	-.219
40	107	.346	.173	.900	-.221
40	108	.283	.162	.833	-.363

WD	TAP	CPMEAN	CPRMS	CPMAX	CPMIN
40	109	.278	.171	.854	-.339
40	110	.395	.188	.989	-.173
40	111	.335	.186	1.024	-.214
40	112	.443	.182	1.062	-.081
40	113	.434	.190	.938	-.054
40	114	.341	.160	.797	-.122
40	115	.097	.128	.491	-.307
40	116	-.005	.091	.299	-.295
40	117	.250	.166	.841	-.205
40	118	.338	.166	.959	-.120
40	119	.297	.164	.945	-.157
40	120	.231	.132	.739	-.175
40	121	.065	.113	.422	-.269
40	122	-.051	.091	.270	-.354
40	123	.002	.106	.396	-.290
40	124	-.072	.090	.240	-.413
40	125	.154	.134	.739	-.221
40	126	.232	.131	.720	-.180
40	127	.194	.131	.696	-.164
40	128	.177	.112	.548	-.118
40	129	.078	.102	.483	-.230
40	130	-.001	.090	.347	-.287
40	131	-.200	.109	.251	-.630
40	132	.076	.159	.789	-.366
40	133	.119	.103	.560	-.119
40	134	.125	.101	.581	-.115
40	135	-.025	.110	.427	-.440
40	136	-.122	.085	.197	-.453
40	137	.031	.097	.614	-.205
40	138	-.108	.077	.270	-.435
40	139	-.201	.076	.135	-.620
40	140	.112	.111	.591	-.371
40	141	.146	.107	.682	-.149
40	142	.175	.098	.609	-.080
40	143	.089	.097	.487	-.176
40	144	.102	.088	.539	-.144
40	145	.033	.083	.451	-.201
40	146	-.026	.080	.474	-.280
40	147	-.164	.073	.273	-.433
40	148	.053	.075	.376	-.229
40	149	.068	.073	.447	-.162
40	150	.083	.065	.372	-.124
40	151	.004	.061	.297	-.186
40	152	.036	.052	.315	-.137
40	153	-.030	.050	.266	-.208
40	154	-.079	.049	.168	-.345
40	155	-.203	.056	.026	-.495
40	156	-.015	.053	.280	-.201
40	157	.001	.056	.284	-.178
40	158	-.017	.046	.254	-.154

APPENDIX A -- PRESSURE DATA: CONFIGURATION A) 1221 BRICKELL BUILDING

WD	TAP	CPMEAN	CPRMS	CPMAX	CPMIN
40	159	.073	.085	.484	-.145
40	160	.072	.081	.461	-.187
40	161	.139	.094	.671	-.142
40	162	.144	.089	.634	-.057
40	163	.005	.073	.432	-.200
40	164	-.033	.058	.230	-.232
40	165	-.103	.063	.186	-.448
40	166	.090	.090	.528	-.233
40	167	.102	.117	.700	-.179
40	168	.064	.068	.395	-.135
40	169	.191	.114	.605	-.076
40	170	.072	.081	.424	-.269
40	171	.035	.082	.436	-.261
40	172	-.016	.090	.496	-.296
40	173	-.005	.091	.532	-.292
40	174	-.134	.089	.370	-.531
40	201	-.328	.068	-.129	-.860
40	202	-.412	.073	-.207	-.982
40	203	-.344	.080	-.133	-.974
40	204	-.356	.096	-.090	-.921
40	205	-.349	.109	-.075	-1.057
40	206	-.448	.140	-.079	-1.207
40	207	-.326	.063	-.121	-.613
40	208	-.331	.067	-.114	-.725
40	209	-.341	.077	-.101	-1.042
40	210	-.344	.087	-.048	-.938
40	211	-.368	.112	-.053	-.993
40	212	-.378	.124	-.100	-1.104
40	213	-.335	.068	-.109	-.641
40	214	-.333	.066	-.108	-.631
40	215	-.344	.070	-.103	-.710
40	216	-.384	.082	-.148	-.744
40	217	-.409	.102	-.134	-.944
40	218	-.410	.108	-.145	-1.035
40	219	-.399	.101	-.101	-.971
40	220	-.394	.092	-.131	-.901
40	221	-.415	.100	-.147	-1.140
40	222	-.427	.103	-.179	-1.011
40	223	-.438	.115	-.118	-1.059
40	224	-.444	.139	-.109	-1.297
40	225	-.482	.183	-.006	-2.765
40	226	-.444	.153	-.053	-1.623
40	227	-.427	.135	-.093	-1.112
40	228	-.416	.124	-.056	-1.007
40	229	-.388	.113	-.122	-1.183
40	230	-.368	.098	-.140	-1.018
40	231	-.497	.207	-.048	-1.636
40	232	-.417	.125	.040	-1.277
40	233	-.428	.127	-.086	-1.263
40	234	-.416	.122	-.055	-1.211

WD	TAP	CPMEAN	CPRMS	CPMAX	CPMIN
40	235	-.393	.112	-.101	-1.041
40	236	-.461	.192	-.018	-1.449
40	237	-.367	.127	.109	-1.015
40	238	-.363	.126	.044	-1.103
40	239	-.358	.120	-.007	-1.062
40	240	-.346	.116	.064	-1.217
40	241	-.383	.155	-.039	-1.311
40	242	-.317	.118	.085	-.955
40	243	-.305	.116	.104	-.834
40	244	-.308	.121	.139	-1.026
40	245	-.300	.123	.102	-.889
40	246	-.256	.081	.005	-.650
40	247	-.264	.084	-.012	-.652
40	248	-.279	.109	.009	-.918
40	249	-.279	.113	.009	-1.140
40	250	-.269	.114	.054	-.977
40	251	-.277	.122	.038	-1.198
40	252	-.247	.083	-.025	-.698
40	253	-.252	.086	-.031	-.724
40	254	-.310	.119	-.013	-1.000
40	255	-.262	.095	-.012	-.751
40	256	-.261	.094	-.001	-.817
40	257	-.271	.108	-.021	-.854
40	258	-.212	.063	-.048	-.585
40	259	-.219	.064	-.048	-.591
40	260	-.236	.079	-.093	-.771
40	261	-.253	.087	-.076	-.716
40	262	-.258	.101	.000	-.853
40	263	-.275	.113	-.060	-1.026
40	264	-.225	.090	.028	-.935
40	265	-.229	.092	.004	-.799
40	266	-.231	.100	.056	-1.158
40	267	-.236	.093	.107	-.905
40	268	-.237	.101	.018	-1.261
40	269	-.251	.125	.036	-1.258
40	270	-.444	.138	-.100	-1.216
40	271	-.462	.142	-.150	-1.495
40	272	-.416	.121	-.134	-1.186
40	273	-.504	.153	-.148	-1.631
40	274	-.462	.154	-.052	-1.769
40	275	-.472	.168	-.106	-1.925
40	276	-.460	.155	-.061	-1.508
40	277	-.481	.136	-.079	-1.707
40	278	-.388	.116	.036	-.882
40	279	-.396	.137	-.029	-1.140
40	280	-.439	.149	-.030	-1.307
40	281	-.500	.125	-.162	-1.296
40	282	-.542	.259	.009	-2.163
40	283	-.442	.147	-.001	-1.179
40	284	-.415	.125	.006	-1.437

WD	TAP	CPMEAN	CPRMS	CPMAX	CPMIN
40	285	-.494	.127	-.130	-1.318
40	301	-.306	.079	-.038	-.674
40	302	-.301	.069	-.070	-.614
40	303	-.317	.074	-.081	-.674
40	304	-.306	.066	-.099	-.613
40	305	-.280	.056	-.082	-.524
40	306	-.287	.052	-.128	-.505
40	307	-.268	.048	-.117	-.430
40	308	-.370	.059	-.197	-.630
40	309	-.255	.051	-.084	-.425
40	310	-.263	.050	-.108	-.432
40	311	-.330	.062	-.136	-.604
40	312	-.315	.055	-.144	-.588
40	313	-.288	.051	-.142	-.505
40	314	-.281	.051	-.139	-.526
40	315	-.275	.048	-.132	-.443
40	316	-.283	.049	-.125	-.515
40	317	-.370	.074	-.181	-.913
40	318	-.341	.061	-.141	-.713
40	319	-.313	.049	-.171	-.569
40	320	-.294	.048	-.158	-.489
40	321	-.298	.048	-.162	-.465
40	322	-.285	.048	-.130	-.507
40	323	-.368	.081	-.182	-.845
40	324	-.344	.067	-.165	-.726
40	325	-.363	.069	-.172	-.714
40	326	-.339	.061	-.176	-.613
40	327	-.325	.057	-.182	-.602
40	328	-.298	.053	-.163	-.486
40	329	-.301	.055	-.164	-.578
40	330	-.281	.055	-.128	-.580
40	331	-.380	.081	-.167	-.945
40	332	-.370	.074	-.171	-.695
40	333	-.374	.072	-.164	-.793
40	334	-.334	.059	-.161	-.626
40	335	-.335	.059	-.169	-.569
40	336	-.350	.102	-.061	-.933
40	337	-.331	.119	.037	-1.128
40	338	-.306	.081	-.070	-.947
40	339	-.291	.120	.025	-1.196
40	340	-.259	.095	-.013	-.988
40	341	-.286	.082	-.051	-1.077
40	342	-.279	.064	-.048	-.635
40	343	-.331	.070	-.097	-.678
40	344	-.345	.082	-.154	-.726
40	345	-.356	.077	-.190	-.710
40	346	-.304	.070	-.143	-.651
40	347	-.304	.068	-.137	-.662
40	348	-.237	.082	.002	-.854
40	349	-.280	.076	-.062	-.780

APPENDIX A -- PRESSURE DATA: CONFIGURATION A; 1221 BRICKELL BUILDING

WD	TAP	CPMEAN	CPRMS	CPMAX	CPMIN
40	350	-.270	.081	.056	-.608
40	351	-.353	.095	.002	-.767
40	352	-.362	.094	-.149	-.854
40	353	-.390	.082	-.200	-.951
40	354	-.312	.076	-.132	-.945
40	355	-.304	.079	-.112	-.752
40	356	-.327	.081	-.127	-.750
40	357	-.378	.079	-.183	-.789
40	358	-.370	.101	-.136	-.930
40	359	-.311	.069	-.127	-.638
40	360	-.212	.093	.051	-.682
40	361	-.275	.087	-.019	-.744
40	362	-.267	.089	.039	-.759
40	363	-.360	.097	-.015	-.828
40	364	-.303	.075	-.103	-.640
40	365	-.400	.080	-.230	-.844
40	366	-.339	.077	-.117	-.750
40	367	-.305	.081	-.110	-.649
40	368	-.301	.080	-.110	-.629
40	369	-.362	.064	-.179	-.603
40	370	-.336	.074	-.151	-.770
40	371	-.330	.082	-.117	-.817
40	372	-.255	.098	.037	-.882
40	373	-.253	.086	-.048	-1.124
40	374	-.242	.081	-.046	-.861
40	401	-.270	.070	.017	-.610
40	402	-.229	.059	-.008	-.672
40	403	-.235	.076	-.020	-.623
40	404	-.353	.103	-.100	-.806
40	405	-.436	.182	.081	-1.471
40	406	-.341	.070	-.091	-.655
40	407	-.501	.195	.014	-3.142
40	408	-.300	.049	-.079	-.550
40	409	-.174	.053	.050	-.515
40	410	-.202	.095	.104	-.721
40	411	-.298	.140	.046	-.845
40	412	-.526	.136	.030	-1.420
40	413	-.216	.038	-.059	-.356
40	414	-.123	.046	.076	-.528
40	415	-.102	.096	.137	-.702
40	416	-.411	.194	.092	-1.053
40	417	-.482	.126	.101	-1.027
40	418	-.215	.055	-.042	-.471
40	419	-.151	.079	.071	-.618
40	420	-.178	.089	.045	-.738
40	421	-.095	.115	.163	-.854
40	422	-.737	.359	.285	-2.198
40	423	-.206	.042	-.041	-.369
40	424	-.137	.044	.031	-.446
40	425	-.071	.055	.137	-.431

WD	TAP	CPMEAN	CPRMS	CPMAX	CPMIN
40	426	-.003	.105	.300	-.869
40	427	-.384	.297	.332	-1.507
40	428	-.437	.252	.473	-1.445
40	429	-.250	.042	-.106	-.421
40	430	-.138	.038	.023	-.276
40	431	-.056	.057	.155	-.400
40	432	-.028	.151	.306	-1.027
40	433	-.314	.284	.489	-1.473
40	434	-.410	.235	.450	-1.433
40	435	-.210	.038	-.085	-.379
40	436	-.174	.043	.006	-.455
40	437	-.081	.068	.125	-.806
40	438	-.146	.200	.311	-1.118
40	439	-.295	.244	.505	-1.397
40	440	-.323	.206	.548	-1.079
40	441	-.202	.042	-.078	-.428
40	442	-.222	.044	-.066	-.532
40	443	-.115	.066	.086	-.687
40	444	-.136	.166	.278	-.904
40	445	-.241	.211	.438	-1.163
40	446	-.334	.194	.424	-1.174
40	447	-.221	.046	-.071	-.388
40	448	-.181	.044	-.037	-.391
40	449	-.102	.052	.116	-.474
40	450	-.135	.120	.214	-1.071
40	451	-.166	.175	.365	-.931
40	452	-.247	.166	.383	-.995
40	453	-.211	.051	-.045	-.463
40	454	-.222	.041	-.089	-.433
40	455	-.129	.030	-.016	-.251
40	456	-.087	.040	.038	-.394
40	457	-.108	.089	.111	-1.156
40	458	-.212	.121	.142	-1.259
40	459	-.223	.060	-.027	-.733
40	460	-.076	.070	.122	-.493
40	461	-.174	.038	-.051	-.337
40	462	-.250	.101	-.026	-.943
40	463	-.186	.051	-.002	-.473
40	464	-.114	.101	.235	-.722
40	465	-.318	.082	-.100	-.858
40	466	.166	.126	.826	-.382
40	467	-.320	.081	-.108	-.836
40	468	-.261	.067	-.018	-.540
40	469	-.178	.053	.038	-.450
40	470	-.299	.095	-.057	-.691
40	471	-.028	.104	.386	-.682
40	472	.142	.100	.656	-.109
40	501	-.423	.120	-.152	-1.040
40	502	-.406	.120	.025	-1.326
40	503	-.474	.154	-.059	-1.405

WD	TAP	CPMEAN	CPRMS	CPMAX	CPMIN
40	504	-.265	.058	-.085	-.537
40	505	-.182	.097	.106	-.675
40	506	-.296	.072	-.129	-.701
40	507	-.207	.045	-.068	-.454
40	508	-.126	.045	.022	-.362
40	509	-.164	.035	-.064	-.291
40	510	-.109	.042	.016	-.484
40	9124	-.124	.087	.269	-.423
40	9140	.087	.109	.650	-.260
40	9213	-.324	.064	-.117	-.532
40	9218	-.364	.095	-.127	-.941
40	9317	-.394	.073	-.197	-.776
40	9322	-.274	.047	-.123	-.461
40	9348	-.229	.074	.015	-.648
40	9355	-.271	.075	-.045	-.813
50	101	.030	.085	.343	-.339
50	102	.139	.102	.477	-.266
50	103	.163	.125	.600	-.278
50	104	.132	.095	.459	-.278
50	105	-.020	.072	.277	-.301
50	106	.267	.139	.779	-.229
50	107	.238	.132	.690	-.245
50	108	.306	.152	.840	-.147
50	109	.365	.163	.814	-.187
50	110	.423	.147	.852	.008
50	111	.447	.178	.963	-.079
50	112	.481	.165	.981	-.015
50	113	.401	.142	.853	-.013
50	114	.260	.110	.621	-.055
50	115	.002	.079	.325	-.247
50	116	-.084	.054	.176	-.269
50	117	.393	.169	.973	-.097
50	118	.421	.162	1.028	-.027
50	119	.314	.148	.909	-.067
50	120	.193	.104	.642	-.057
50	121	-.005	.071	.288	-.199
50	122	-.114	.059	.138	-.319
50	123	-.056	.078	.292	-.290
50	124	-.127	.069	.155	-.359
50	125	.306	.150	.964	-.133
50	126	.339	.144	.991	-.004
50	127	.245	.133	.838	-.064
50	128	.174	.098	.560	-.092
50	129	.043	.081	.363	-.199
50	130	-.047	.070	.222	-.259
50	131	-.217	.096	.128	-.615
50	132	-.030	.109	.595	-.354
50	133	.109	.088	.488	-.115
50	134	.107	.084	.508	-.106
50	135	-.063	.090	.379	-.359

APPENDIX A -- PRESSURE DATA: CONFIGURATION A; 1221 BRICKELL BUILDING

WD	TAP	CPMEAN	CPRMS	CPMAX	CPMIN
50	136	-.167	.071	.084	-.542
50	137	-.010	.071	.307	-.230
50	138	-.176	.072	.082	-.443
50	139	-.264	.070	-.017	-.527
50	140	.177	.120	.638	-.342
50	141	.202	.125	.753	-.178
50	142	.196	.109	.654	-.073
50	143	.090	.097	.510	-.235
50	144	.089	.078	.430	-.210
50	145	.020	.068	.381	-.176
50	146	-.048	.058	.238	-.229
50	147	-.185	.050	.045	-.361
50	148	.054	.087	.412	-.340
50	149	.057	.077	.397	-.459
50	150	.071	.068	.368	-.164
50	151	-.005	.065	.292	-.212
50	152	.029	.055	.244	-.149
50	153	-.025	.048	.168	-.190
50	154	-.077	.041	.092	-.240
50	155	-.199	.047	-.012	-.404
50	156	-.019	.053	.209	-.236
50	157	-.014	.054	.257	-.221
50	158	-.027	.044	.178	-.192
50	159	.060	.090	.567	-.140
50	160	.044	.075	.421	-.128
50	161	.128	.105	.578	-.172
50	162	.143	.096	.549	-.089
50	163	.005	.071	.306	-.174
50	164	-.032	.050	.167	-.177
50	165	-.107	.053	.128	-.366
50	166	.085	.083	.438	-.180
50	167	.089	.111	.619	-.193
50	168	.052	.071	.390	-.151
50	169	.161	.111	.667	-.072
50	170	.053	.087	.475	-.292
50	171	.066	.082	.474	-.232
50	172	-.050	.067	.249	-.296
50	173	-.036	.067	.254	-.278
50	174	-.174	.064	.050	-.462
50	201	-.311	.050	-.129	-.519
50	202	-.393	.053	-.205	-.615
50	203	-.324	.053	-.114	-.620
50	204	-.357	.061	-.176	-.622
50	205	-.353	.077	-.166	-.868
50	206	-.442	.090	-.240	-1.064
50	207	-.331	.050	-.180	-.502
50	208	-.332	.050	-.165	-.506
50	209	-.340	.052	-.164	-.527
50	210	-.336	.057	-.176	-.569
50	211	-.368	.074	-.194	-.728

WD	TAP	CPMEAN	CPRMS	CPMAX	CPMIN
50	212	-.371	.082	-.165	-.937
50	213	-.349	.055	-.184	-.544
50	214	-.334	.052	-.165	-.525
50	215	-.352	.053	-.191	-.562
50	216	-.363	.056	-.165	-.617
50	217	-.380	.070	-.161	-.927
50	218	-.368	.074	-.160	-.980
50	219	-.367	.071	-.146	-.678
50	220	-.376	.076	-.155	-.749
50	221	-.393	.080	-.171	-.787
50	222	-.390	.082	-.176	-1.049
50	223	-.405	.091	-.189	-.970
50	224	-.409	.099	-.208	-1.194
50	225	-.487	.138	-.174	-1.335
50	226	-.451	.134	-.117	-1.379
50	227	-.421	.113	-.184	-1.063
50	228	-.422	.108	-.165	-1.276
50	229	-.404	.085	-.144	-.990
50	230	-.371	.080	-.126	-1.145
50	231	-.477	.177	-.110	-1.580
50	232	-.422	.121	-.044	-1.178
50	233	-.431	.125	-.164	-1.643
50	234	-.394	.109	-.095	-1.200
50	235	-.405	.088	-.138	-.950
50	236	-.425	.143	-.061	-1.257
50	237	-.421	.153	-.021	-1.285
50	238	-.380	.134	-.026	-1.529
50	239	-.403	.114	-.088	-1.492
50	240	-.393	.099	-.071	-1.007
50	241	-.468	.198	-.036	-1.663
50	242	-.337	.133	.199	-.949
50	243	-.371	.137	.051	-1.116
50	244	-.368	.126	-.001	-.915
50	245	-.370	.116	-.014	-.972
50	246	-.234	.081	-.033	-.812
50	247	-.283	.083	-.078	-.846
50	248	-.298	.096	-.039	-.925
50	249	-.305	.100	.096	-.862
50	250	-.257	.100	.058	-.721
50	251	-.312	.102	-.015	-.920
50	252	-.253	.065	-.037	-.545
50	253	-.258	.067	-.041	-.579
50	254	-.304	.083	-.097	-.815
50	255	-.278	.082	-.037	-.665
50	256	-.291	.093	.023	-.910
50	257	-.304	.101	.026	-1.075
50	258	-.151	.061	.034	-.475
50	259	-.219	.063	-.035	-.544
50	260	-.239	.071	-.063	-.677
50	261	-.277	.091	-.044	-.842

WD	TAP	CPMEAN	CPRMS	CPMAX	CPMIN
50	262	-.227	.116	.017	-1.281
50	263	-.306	.121	-.093	-1.308
50	264	-.216	.089	-.023	-1.192
50	265	-.223	.091	-.006	-1.180
50	266	-.165	.097	.046	-1.111
50	267	-.250	.102	.033	-.859
50	268	-.276	.131	.033	-1.517
50	269	-.304	.161	.079	-1.668
50	270	-.429	.101	-.182	-1.180
50	271	-.455	.111	-.191	-1.635
50	272	-.402	.083	-.186	-.902
50	273	-.396	.090	-.171	-.914
50	274	-.465	.122	-.148	-1.804
50	275	-.491	.130	-.207	-1.215
50	276	-.466	.127	-.150	-1.231
50	277	-.379	.096	-.014	-.877
50	278	-.380	.093	-.076	-.862
50	279	-.394	.097	-.061	-.988
50	280	-.438	.119	-.087	-1.421
50	281	-.437	.089	-.199	-.872
50	282	-.470	.162	-.146	-1.647
50	283	-.440	.120	-.057	-1.014
50	284	-.441	.103	-.135	-1.210
50	285	-.476	.098	-.227	-1.221
50	301	-.245	.054	-.050	-.490
50	302	-.308	.050	-.120	-.506
50	303	-.325	.052	-.167	-.559
50	304	-.319	.049	-.151	-.494
50	305	-.230	.046	-.055	-.408
50	306	-.306	.043	-.156	-.483
50	307	-.287	.046	-.150	-.480
50	308	-.313	.045	-.169	-.492
50	309	-.218	.048	-.047	-.399
50	310	-.285	.047	-.123	-.466
50	311	-.334	.047	-.208	-.521
50	312	-.326	.044	-.201	-.502
50	313	-.237	.042	-.102	-.387
50	314	-.300	.043	-.181	-.478
50	315	-.295	.045	-.159	-.457
50	316	-.294	.047	-.117	-.498
50	317	-.376	.061	-.208	-.739
50	318	-.339	.053	-.151	-.676
50	319	-.320	.046	-.153	-.519
50	320	-.305	.043	-.175	-.459
50	321	-.324	.043	-.178	-.467
50	322	-.294	.043	-.165	-.439
50	323	-.386	.083	-.189	-.892
50	324	-.366	.069	-.199	-.773
50	325	-.399	.070	-.221	-.751
50	326	-.363	.061	-.180	-.720

APPENDIX A -- PRESSURE DATA: CONFIGURATION A; 1221 BRICKELL BUILDING

WD	TAP	CPMEAN	CPRMS	CPMAX	CPMIN
50	327	-.348	.054	-.170	-.620
50	328	-.327	.052	-.190	-.587
50	329	-.341	.053	-.189	-.565
50	330	-.311	.053	-.154	-.532
50	331	-.380	.067	-.212	-.745
50	332	-.376	.065	-.186	-.702
50	333	-.401	.067	-.233	-.987
50	334	-.369	.067	-.191	-.713
50	335	-.367	.065	-.197	-.620
50	336	-.383	.082	-.145	-.789
50	337	-.386	.096	-.029	-1.004
50	338	-.365	.073	-.123	-.752
50	339	-.360	.104	.008	-1.002
50	340	-.344	.104	-.054	-.808
50	341	-.361	.090	-.110	-.836
50	342	-.356	.073	-.141	-.646
50	343	-.398	.072	-.191	-.726
50	344	-.400	.076	-.201	-.802
50	345	-.407	.073	-.223	-.875
50	346	-.371	.068	-.186	-.776
50	347	-.363	.071	-.108	-.691
50	348	-.279	.093	.018	-.843
50	349	-.302	.089	.026	-.724
50	350	-.320	.091	.079	-.717
50	351	-.399	.096	.069	-.741
50	352	-.405	.086	-.197	-1.086
50	353	-.405	.074	-.199	-.877
50	354	-.365	.068	-.136	-.685
50	355	-.351	.073	-.095	-.703
50	356	-.366	.078	-.171	-1.077
50	357	-.374	.074	-.187	-.756
50	358	-.392	.094	-.184	-1.020
50	359	-.374	.083	-.106	-.776
50	360	-.227	.127	.254	-.799
50	361	-.245	.119	.191	-.703
50	362	-.308	.106	.003	-.780
50	363	-.433	.106	-.083	-1.085
50	364	-.352	.074	-.141	-.728
50	365	-.375	.071	-.170	-.664
50	366	-.352	.066	-.178	-.609
50	367	-.381	.094	-.122	-.782
50	368	-.374	.091	-.121	-.741
50	369	-.332	.062	-.155	-.567
50	370	-.412	.076	-.192	-.756
50	371	-.408	.074	-.200	-.785
50	372	-.362	.104	-.060	-.966
50	373	-.363	.086	-.114	-.907
50	374	-.355	.085	-.088	-.904
50	401	-.269	.045	-.050	-.542
50	402	-.206	.040	-.066	-.400

WD	TAP	CPMEAN	CPRMS	CPMAX	CPMIN
50	403	-.188	.052	-.037	-.470
50	404	-.227	.084	-.008	-.641
50	405	-.335	.110	.090	-.784
50	406	-.259	.043	-.074	-.457
50	407	-.380	.105	.055	-.954
50	408	-.245	.039	-.091	-.378
50	409	-.145	.037	.003	-.310
50	410	-.120	.063	.029	-.583
50	411	-.181	.121	.102	-.654
50	412	-.345	.114	.145	-.900
50	413	-.210	.033	-.108	-.358
50	414	-.115	.038	.050	-.342
50	415	-.051	.053	.106	-.455
50	416	-.117	.170	.198	-1.185
50	417	-.353	.131	.312	-.992
50	418	-.247	.067	-.050	-.454
50	419	-.190	.100	.100	-.529
50	420	-.148	.121	.166	-.622
50	421	-.049	.109	.223	-.654
50	422	-.173	.342	.423	-1.695
50	423	-.179	.043	-.025	-.328
50	424	-.108	.050	.088	-.276
50	425	-.016	.066	.220	-.249
50	426	.083	.089	.366	-.401
50	427	.021	.227	.542	-1.077
50	428	-.114	.247	.648	-1.051
50	429	-.238	.044	-.047	-.398
50	430	-.093	.046	.097	-.260
50	431	.011	.071	.292	-.229
50	432	.122	.096	.467	-.534
50	433	.086	.235	.685	-.927
50	434	-.068	.239	.746	-.851
50	435	-.204	.037	-.040	-.372
50	436	-.142	.044	.042	-.298
50	437	-.001	.067	.247	-.201
50	438	.065	.114	.394	-.658
50	439	.018	.245	.584	-.829
50	440	-.049	.230	.662	-1.186
50	441	-.220	.045	.013	-.386
50	442	-.214	.048	.081	-.394
50	443	-.051	.061	.219	-.312
50	444	.045	.112	.424	-.743
50	445	-.016	.218	.615	-.757
50	446	-.116	.221	.668	-.899
50	447	-.250	.050	-.042	-.440
50	448	-.182	.051	.249	-.428
50	449	-.051	.061	.230	-.330
50	450	-.026	.097	.371	-.568
50	451	-.018	.168	.482	-.715
50	452	-.073	.174	.515	-.737

WD	TAP	CPMEAN	CPRMS	CPMAX	CPMIN
50	453	-.234	.045	-.092	-.437
50	454	-.229	.037	-.101	-.354
50	455	-.126	.031	.015	-.239
50	456	-.074	.034	.072	-.310
50	457	-.061	.064	.139	-.610
50	458	-.140	.092	.128	-.783
50	459	-.240	.052	-.024	-.519
50	460	-.042	.048	.194	-.282
50	461	-.196	.040	-.026	-.407
50	462	-.240	.091	.020	-.831
50	463	-.202	.074	.109	-.495
50	464	-.107	.096	.297	-.592
50	465	-.396	.083	-.133	-.715
50	466	.191	.128	.750	-.531
50	467	-.399	.083	-.136	-.715
50	468	-.277	.084	.240	-.540
50	469	-.166	.053	.251	-.519
50	470	-.258	.103	.123	-.740
50	471	-.008	.091	.441	-.497
50	472	.165	.116	.772	-.106
50	501	-.418	.087	-.228	-1.145
50	502	-.407	.111	-.155	-1.034
50	503	-.508	.139	-.231	-1.375
50	504	-.297	.059	-.127	-.568
50	505	-.182	.101	.154	-.839
50	506	-.353	.074	-.180	-.642
50	507	-.250	.052	-.080	-.509
50	508	-.120	.044	.012	-.367
50	509	-.193	.038	-.064	-.396
50	510	-.103	.037	.060	-.416
50	9124	-.163	.068	.128	-.467
50	9140	.158	.121	.780	-.282
50	9213	-.338	.053	-.171	-.553
50	9218	-.364	.074	-.192	-.948
50	9317	-.410	.056	-.212	-.681
50	9322	-.299	.043	-.161	-.459
50	9348	-.295	.092	-.051	-.777
50	9355	-.358	.068	-.122	-.778
60	101	-.020	.074	.250	-.414
60	102	.102	.093	.422	-.370
60	103	.177	.117	.551	-.210
60	104	.067	.080	.368	-.263
60	105	-.097	.056	.129	-.332
60	106	.302	.131	.703	-.374
60	107	.177	.107	.560	-.217
60	108	.360	.144	.788	-.393
60	109	.401	.170	.895	-.378
60	110	.362	.126	.767	-.034
60	111	.433	.199	1.013	-.646
60	112	.429	.163	.967	-.546

APPENDIX A -- PRESSURE DATA: CONFIGURATION A; 1221 BRICKELL BUILDING

WD	TAP	CPMEAN	CPRMS	CPMAX	CPMIN
60	113	.321	.137	.709	-.180
60	114	.172	.101	.516	-.282
60	115	-.068	.069	.193	-.495
60	116	-.141	.050	.042	-.459
60	117	.379	.212	.970	-.510
60	118	.386	.180	.981	-.526
60	119	.257	.144	.761	-.161
60	120	.131	.098	.495	-.164
60	121	-.063	.067	.191	-.361
60	122	-.168	.055	.034	-.384
60	123	-.102	.077	.195	-.420
60	124	-.170	.067	.056	-.511
60	125	.246	.196	1.060	-.795
60	126	.264	.167	.882	-.459
60	127	.161	.133	.629	-.260
60	128	.099	.096	.420	-.197
60	129	-.026	.080	.292	-.329
60	130	-.107	.068	.176	-.346
60	131	-.265	.091	.018	-.658
60	132	-.113	.103	.465	-.473
60	133	.053	.089	.399	-.215
60	134	.053	.083	.370	-.195
60	135	-.114	.087	.195	-.420
60	136	-.202	.073	.063	-.518
60	137	-.060	.075	.335	-.380
60	138	-.228	.080	.053	-.611
60	139	-.304	.076	-.057	-.695
60	140	.170	.184	.842	-.508
60	141	.167	.179	.752	-.863
60	142	.156	.127	.674	-.318
60	143	.043	.104	.504	-.222
60	144	.041	.084	.436	-.284
60	145	-.037	.067	.250	-.290
60	146	-.101	.057	.126	-.403
60	147	-.224	.051	-.052	-.542
60	148	.044	.146	.630	-.574
60	149	.038	.121	.475	-.582
60	150	.060	.083	.422	-.242
60	151	-.016	.068	.306	-.224
60	152	.012	.056	.238	-.168
60	153	-.060	.046	.216	-.290
60	154	-.106	.041	.058	-.294
60	155	-.212	.045	-.071	-.432
60	156	-.024	.072	.316	-.397
60	157	-.015	.071	.271	-.364
60	158	-.012	.057	.278	-.230
60	159	.065	.094	.424	-.274
60	160	.043	.075	.389	-.199
60	161	.063	.090	.491	-.267
60	162	.089	.084	.516	-.164
60	163	-.028	.068	.228	-.262
60	164	-.056	.052	.169	-.251
60	165	-.122	.052	.079	-.380
60	166	.072	.078	.549	-.122
60	167	.065	.105	.853	-.222
60	168	.061	.072	.453	-.204
60	169	.174	.122	.791	-.137
60	170	.016	.117	.476	-.582
60	171	.024	.095	.417	-.376
60	172	-.100	.069	.273	-.369
60	173	-.086	.069	.308	-.349
60	174	-.214	.067	.083	-.470
60	201	-.330	.052	-.143	-.575
60	202	-.401	.053	-.220	-.651
60	203	-.338	.052	-.154	-.565
60	204	-.358	.054	-.199	-.595
60	205	-.348	.062	-.197	-.698
60	206	-.423	.070	-.255	-.898
60	207	-.334	.050	-.192	-.558
60	208	-.336	.051	-.186	-.543
60	209	-.343	.052	-.195	-.555
60	210	-.352	.053	-.195	-.565
60	211	-.360	.063	-.201	-.765
60	212	-.359	.065	-.186	-.812
60	213	-.345	.054	-.177	-.562
60	214	-.346	.052	-.182	-.550
60	215	-.349	.051	-.191	-.556
60	216	-.375	.053	-.230	-.574
60	217	-.388	.062	-.207	-.691
60	218	-.394	.071	-.199	-.835
60	219	-.384	.072	-.160	-.716
60	220	-.391	.071	-.194	-.698
60	221	-.408	.077	-.217	-.852
60	222	-.420	.079	-.214	-.772
60	223	-.413	.085	-.201	-.940
60	224	-.420	.096	-.153	-1.022
60	225	-.467	.125	-.182	-2.010
60	226	-.465	.121	-.143	-1.644
60	227	-.439	.114	-.204	-1.062
60	228	-.433	.105	-.191	-.971
60	229	-.416	.083	-.179	-1.212
60	230	-.419	.077	-.207	-.954
60	231	-.484	.158	-.077	-1.468
60	232	-.453	.134	-.170	-1.335
60	233	-.462	.136	-.164	-1.366
60	234	-.457	.116	-.219	-1.178
60	235	-.434	.091	-.211	-.980
60	236	-.448	.150	-.068	-1.296
60	237	-.443	.152	.014	-1.391
60	238	-.445	.133	-.100	-1.200
60	239	-.427	.106	-.181	-1.074
60	240	-.422	.093	-.155	-1.015
60	241	-.510	.248	.037	-1.973
60	242	-.418	.148	.020	-1.093
60	243	-.402	.140	.088	-1.140
60	244	-.416	.138	-.014	-1.148
60	245	-.415	.120	-.076	-1.096
60	246	-.297	.088	.000	-.677
60	247	-.298	.090	-.011	-.655
60	248	-.303	.092	-.002	-.695
60	249	-.319	.098	-.003	-.791
60	250	-.341	.096	.005	-.777
60	251	-.337	.092	-.039	-.884
60	252	-.261	.070	-.056	-.664
60	253	-.264	.072	-.056	-.703
60	254	-.301	.080	-.068	-.712
60	255	-.293	.080	-.051	-.721
60	256	-.307	.081	.019	-.693
60	257	-.318	.083	-.021	-.842
60	258	-.217	.061	-.005	-.747
60	259	-.215	.062	-.026	-.752
60	260	-.242	.068	-.051	-.615
60	261	-.296	.083	-.061	-.922
60	262	-.315	.102	-.044	-1.346
60	263	-.312	.099	-.089	-1.163
60	264	-.194	.074	.015	-.656
60	265	-.201	.077	.012	-.701
60	266	-.222	.083	-.053	-1.093
60	267	-.256	.097	.058	-.998
60	268	-.316	.142	-.024	-1.466
60	269	-.334	.161	.014	-1.653
60	270	-.436	.093	-.207	-1.095
60	271	-.454	.104	-.214	-1.599
60	272	-.418	.088	-.194	-.919
60	273	-.432	.090	-.187	-.987
60	274	-.455	.099	-.214	-1.163
60	275	-.466	.107	-.193	-1.145
60	276	-.462	.116	-.170	-1.302
60	277	-.401	.097	-.068	-1.053
60	278	-.391	.093	-.090	-.988
60	279	-.417	.095	-.101	-1.108
60	280	-.466	.114	-.177	-1.256
60	281	-.460	.093	-.189	-.975
60	282	-.504	.169	-.165	-2.099
60	283	-.465	.129	-.122	-1.244
60	284	-.461	.096	-.198	-1.010
60	285	-.467	.088	-.220	-.915
60	301	-.344	.059	-.173	-.893
60	302	-.332	.055	-.166	-.640
60	303	-.337	.052	-.184	-.613

APPENDIX A -- PRESSURE DATA: CONFIGURATION A: 1221 BRICKELL BUILDING

WD	TAP	CPMEAN	CPRMS	CPMAX	CPMIN
60	304	-.330	.050	-.167	-.595
60	305	-.322	.050	-.158	-.526
60	306	-.323	.050	-.173	-.559
60	307	-.322	.056	-.136	-.652
60	308	-.359	.052	-.217	-.622
60	309	-.328	.055	-.163	-.601
60	310	-.318	.054	-.160	-.572
60	311	-.343	.055	-.150	-.930
60	312	-.337	.053	-.179	-.892
60	313	-.333	.051	-.202	-.750
60	314	-.319	.050	-.183	-.559
60	315	-.327	.053	-.172	-.572
60	316	-.322	.053	-.171	-.572
60	317	-.400	.068	-.169	-.793
60	318	-.368	.061	-.171	-.710
60	319	-.354	.060	-.193	-.738
60	320	-.341	.060	-.152	-.661
60	321	-.353	.058	-.156	-.607
60	322	-.327	.057	-.130	-.579
60	323	-.427	.094	-.155	-.945
60	324	-.409	.084	-.180	-.871
60	325	-.438	.085	-.201	-.964
60	326	-.403	.072	-.188	-.718
60	327	-.398	.074	-.195	-.734
60	328	-.379	.066	-.214	-.707
60	329	-.388	.068	-.169	-.676
60	330	-.360	.067	-.145	-.649
60	331	-.420	.073	-.205	-.790
60	332	-.421	.073	-.206	-.926
60	333	-.448	.075	-.203	-.884
60	334	-.425	.080	-.203	-.840
60	335	-.414	.081	-.141	-.919
60	336	-.411	.084	-.167	-.789
60	337	-.412	.101	-.112	-.915
60	338	-.402	.083	-.166	-.736
60	339	-.415	.109	-.129	-1.095
60	340	-.406	.116	-.126	-1.082
60	341	-.420	.100	-.143	-.994
60	342	-.419	.082	-.145	-.818
60	343	-.456	.091	-.106	-1.167
60	344	-.465	.099	-.178	-1.450
60	345	-.470	.086	-.241	-1.074
60	346	-.433	.077	-.216	-.834
60	347	-.427	.080	-.240	-.802
60	348	-.293	.100	-.050	-1.012
60	349	-.316	.095	-.082	-.922
60	350	-.334	.098	-.017	-.742
60	351	-.433	.107	-.060	-.939
60	352	-.461	.098	-.217	-1.071
60	353	-.481	.093	-.232	-1.072
60	354	-.443	.085	-.212	-.808
60	355	-.440	.088	-.222	-.970
60	356	-.444	.096	-.232	-1.108
60	357	-.460	.093	-.247	-1.148
60	358	-.456	.115	-.225	-1.314
60	359	-.416	.098	-.170	-.889
60	360	-.197	.105	.338	-.657
60	361	-.219	.105	.193	-.615
60	362	-.262	.120	.114	-.864
60	363	-.463	.119	.014	-1.020
60	364	-.421	.092	-.139	-.924
60	365	-.440	.085	-.201	-.786
60	366	-.378	.072	-.177	-.675
60	367	-.444	.101	-.205	-.916
60	368	-.436	.098	-.197	-.867
60	369	-.386	.077	-.192	-.852
60	370	-.464	.078	-.248	-.903
60	371	-.459	.081	-.242	-.967
60	372	-.409	.110	-.073	-1.186
60	373	-.395	.088	-.070	-1.020
60	374	-.387	.088	-.105	-.919
60	401	-.283	.038	-.149	-.508
60	402	-.208	.033	-.093	-.338
60	403	-.173	.035	-.021	-.427
60	404	-.175	.056	.021	-.573
60	405	-.189	.104	.103	-.526
60	406	-.293	.038	-.154	-.524
60	407	-.213	.126	.182	-.677
60	408	-.255	.035	-.148	-.414
60	409	-.132	.036	-.001	-.312
60	410	-.086	.044	.066	-.288
60	411	-.056	.080	.137	-.603
60	412	-.169	.148	.260	-.638
60	413	-.198	.037	-.027	-.382
60	414	-.082	.045	.137	-.402
60	415	-.020	.055	.208	-.314
60	416	.010	.072	.244	-.676
60	417	-.114	.172	.388	-.749
60	418	-.263	.079	.071	-.496
60	419	-.190	.112	.243	-.559
60	420	-.165	.133	.313	-.628
60	421	-.012	.154	.462	-.671
60	422	.106	.143	.473	-1.223
60	423	-.129	.061	.231	-.360
60	424	-.031	.072	.251	-.288
60	425	.087	.092	.394	-.437
60	426	.213	.117	.566	-.462
60	427	.305	.146	.726	-.653
60	428	.337	.213	.900	-.648
60	429	-.186	.062	.077	-.427
60	430	-.021	.066	.223	-.262
60	431	.140	.095	.479	-.177
60	432	.304	.123	.770	-.090
60	433	.416	.154	.835	-.295
60	434	.400	.216	.864	-.594
60	435	-.166	.058	.089	-.361
60	436	-.070	.074	.247	-.345
60	437	.114	.103	.604	-.229
60	438	.218	.143	.821	-.253
60	439	.318	.189	.903	-.528
60	440	.335	.225	.909	-.801
60	441	-.204	.068	.086	-.459
60	442	-.161	.080	.165	-.465
60	443	.047	.095	.419	-.253
60	444	.151	.125	.715	-.372
60	445	.202	.174	.839	-.678
60	446	.139	.214	.798	-.775
60	447	-.248	.073	.168	-.538
60	448	-.161	.071	.176	-.411
60	449	-.000	.079	.348	-.236
60	450	.053	.103	.623	-.489
60	451	.121	.133	.666	-.796
60	452	.102	.161	.689	-.778
60	453	-.251	.053	-.050	-.462
60	454	-.233	.045	-.069	-.429
60	455	-.120	.039	.084	-.342
60	456	-.054	.041	.180	-.189
60	457	-.008	.053	.213	-.358
60	458	-.064	.076	.220	-.551
60	459	-.238	.057	.027	-.476
60	460	-.039	.048	.190	-.252
60	461	-.209	.051	-.063	-.457
60	462	-.245	.099	.028	-.848
60	463	-.260	.099	.065	-.620
60	464	-.021	.095	.357	-.459
60	465	-.453	.091	-.225	-.919
60	466	.163	.103	.609	-.185
60	467	-.458	.089	-.229	-.939
60	468	-.216	.148	.371	-.684
60	469	-.132	.080	.416	-.462
60	470	-.201	.129	.475	-.704
60	471	.028	.091	.461	-.272
60	472	.155	.118	.721	-.150
60	501	-.435	.081	-.228	-.858
60	502	-.419	.110	-.189	-1.076
60	503	-.510	.125	-.188	-1.298
60	504	-.328	.081	-.105	-.835
60	505	-.155	.107	.242	-.723
60	506	-.395	.087	-.194	-.808
60	507	-.282	.072	.010	-.627

APPENDIX A -- PRESSURE DATA: CONFIGURATION A: 1221 BRICKELL BUILDING

WD	TAP	CPMEAN	CPRMS	CPMAX	CPMIN
60	508	-.127	.052	.094	-.435
60	509	-.209	.048	-.063	-.430
60	510	-.104	.041	.046	-.295
60	9124	-.223	.071	.015	-.587
60	9140	.163	.188	.929	-.545
60	9213	-.365	.055	-.198	-.565
60	9218	-.383	.070	-.189	-.756
60	9317	-.453	.071	-.231	-.871
60	9322	-.343	.055	-.184	-.612
60	9348	-.291	.090	-.074	-.845
60	9355	-.415	.088	-.139	-.822
70	101	-.114	.075	.119	-.989
70	102	.019	.091	.294	-1.019
70	103	.092	.115	.433	-.798
70	104	-.049	.068	.189	-.440
70	105	-.191	.052	-.004	-.415
70	106	.239	.131	.622	-.811
70	107	.027	.091	.352	-.309
70	108	.267	.154	.634	-.913
70	109	.201	.251	.699	-1.451
70	110	.220	.118	.694	-.312
70	111	.065	.292	.793	-1.353
70	112	.207	.232	.718	-1.271
70	113	.184	.117	.581	-.499
70	114	.054	.084	.353	-.448
70	115	-.187	.061	.026	-.538
70	116	-.224	.047	-.032	-.426
70	117	-.012	.280	.766	-1.169
70	118	.058	.279	.677	-1.109
70	119	.064	.151	.489	-.932
70	120	-.004	.083	.367	-.339
70	121	-.159	.064	.093	-.427
70	122	-.233	.055	-.041	-.459
70	123	-.204	.077	.097	-.575
70	124	-.237	.067	.009	-.500
70	125	-.032	.246	.768	-.794
70	126	.023	.232	.712	-.771
70	127	.011	.140	.484	-.584
70	128	-.002	.088	.374	-.303
70	129	-.120	.074	.183	-.353
70	130	-.181	.068	.098	-.393
70	131	-.345	.096	-.030	-.864
70	132	-.201	.096	.280	-.522
70	133	-.050	.085	.359	-.353
70	134	-.043	.081	.339	-.311
70	135	-.224	.094	.231	-.548
70	136	-.272	.082	.004	-.608
70	137	-.130	.080	.301	-.455
70	138	-.283	.093	.093	-.712
70	139	-.374	.093	-.047	-.769

WD	TAP	CPMEAN	CPRMS	CPMAX	CPMIN
70	140	-.035	.215	.636	-.925
70	141	-.034	.194	.509	-.827
70	142	.035	.123	.490	-.731
70	143	-.048	.089	.367	-.485
70	144	-.026	.071	.288	-.286
70	145	-.095	.078	.276	-.360
70	146	-.146	.068	.169	-.459
70	147	-.278	.058	-.017	-.509
70	148	-.056	.155	.470	-.733
70	149	-.027	.142	.500	-.760
70	150	.028	.094	.422	-.648
70	151	-.042	.076	.292	-.300
70	152	-.010	.064	.290	-.231
70	153	-.081	.054	.253	-.240
70	154	-.121	.049	.185	-.313
70	155	-.241	.052	-.013	-.489
70	156	-.061	.096	.228	-.661
70	157	-.036	.087	.347	-.753
70	158	-.007	.059	.301	-.178
70	159	.003	.101	.528	-.258
70	160	.019	.078	.444	-.193
70	161	.009	.090	.484	-.235
70	162	.034	.080	.457	-.148
70	163	-.086	.069	.226	-.263
70	164	-.095	.053	.146	-.270
70	165	-.151	.053	.075	-.355
70	166	.043	.083	.462	-.171
70	167	.012	.108	.635	-.241
70	168	.045	.088	.497	-.193
70	169	.088	.116	.750	-.140
70	170	-.065	.154	.405	-.803
70	171	-.043	.143	.415	-.878
70	172	-.157	.072	.238	-.442
70	173	-.151	.071	.250	-.391
70	174	-.226	.072	.043	-.596
70	201	-.335	.053	-.188	-.615
70	202	-.426	.056	-.283	-.718
70	203	-.351	.053	-.207	-.616
70	204	-.379	.054	-.224	-.596
70	205	-.359	.056	-.188	-.681
70	206	-.454	.063	-.261	-.886
70	207	-.363	.053	-.190	-.563
70	208	-.376	.053	-.211	-.607
70	209	-.383	.053	-.215	-.619
70	210	-.394	.053	-.233	-.689
70	211	-.389	.056	-.230	-.889
70	212	-.400	.063	-.231	-.840
70	213	-.396	.056	-.228	-.637
70	214	-.404	.055	-.235	-.638
70	215	-.400	.054	-.224	-.621

WD	TAP	CPMEAN	CPRMS	CPMAX	CPMIN
70	216	-.406	.056	-.236	-.809
70	217	-.413	.063	-.218	-.955
70	218	-.426	.071	-.201	-.934
70	219	-.409	.071	-.153	-.873
70	220	-.417	.069	-.250	-.692
70	221	-.433	.073	-.258	-.829
70	222	-.453	.074	-.267	-.822
70	223	-.436	.074	-.260	-.858
70	224	-.440	.078	-.163	-.838
70	225	-.494	.123	-.190	-1.508
70	226	-.500	.121	-.152	-1.403
70	227	-.469	.111	-.214	-1.143
70	228	-.459	.107	-.238	-1.057
70	229	-.453	.080	-.228	-.885
70	230	-.470	.080	-.083	-1.020
70	231	-.506	.167	-.156	-1.502
70	232	-.497	.144	-.233	-1.708
70	233	-.496	.130	-.248	-1.536
70	234	-.496	.109	-.255	-1.337
70	235	-.476	.083	-.245	-.919
70	236	-.491	.155	-.015	-1.304
70	237	-.497	.164	-.039	-1.468
70	238	-.501	.135	-.002	-1.153
70	239	-.476	.105	-.174	-1.031
70	240	-.483	.096	-.238	-.952
70	241	-.615	.272	.090	-2.180
70	242	-.522	.167	.086	-1.239
70	243	-.497	.159	.010	-1.291
70	244	-.491	.135	-.153	-1.159
70	245	-.466	.111	-.084	-1.172
70	246	-.353	.095	-.068	-.723
70	247	-.350	.095	-.079	-.721
70	248	-.361	.106	.000	-.906
70	249	-.372	.099	-.008	-.773
70	250	-.405	.105	-.007	-.925
70	251	-.398	.100	-.046	-.955
70	252	-.300	.078	-.068	-.702
70	253	-.304	.079	-.084	-.693
70	254	-.314	.088	-.032	-1.110
70	255	-.336	.082	-.021	-.667
70	256	-.365	.090	-.012	-.794
70	257	-.376	.092	-.069	-.907
70	258	-.254	.069	-.039	-.770
70	259	-.250	.072	-.026	-.850
70	260	-.263	.060	-.085	-.692
70	261	-.342	.080	-.066	-.660
70	262	-.351	.083	-.140	-.792
70	263	-.337	.076	-.140	-.761
70	264	-.229	.076	.005	-.870
70	265	-.235	.078	-.013	-.806

APPENDIX A -- PRESSURE DATA: CONFIGURATION A; 1221 BRICKELL BUILDING

WD	TAP	CPMEAN	CPRMS	CPMAX	CPMIN
70	266	-.257	.077	.039	-.760
70	267	-.298	.099	-.008	-.899
70	268	-.354	.133	.058	-1.421
70	269	-.367	.146	-.008	-1.587
70	270	-.421	.086	-.151	-.911
70	271	-.433	.097	-.187	-1.078
70	272	-.406	.076	-.185	-.791
70	273	-.419	.077	-.170	-.812
70	274	-.439	.098	-.190	-1.195
70	275	-.457	.102	-.075	-1.176
70	276	-.456	.111	-.160	-1.071
70	277	-.390	.088	-.130	-.980
70	278	-.388	.084	-.061	-.969
70	279	-.401	.085	-.024	-.817
70	280	-.446	.101	-.168	-.887
70	281	-.435	.086	-.202	-.973
70	282	-.472	.150	-.134	-1.500
70	283	-.464	.128	-.101	-1.289
70	284	-.459	.089	-.262	-1.023
70	285	-.464	.081	-.251	-.980
70	301	-.388	.064	-.196	-.728
70	302	-.373	.058	-.176	-.644
70	303	-.386	.063	-.221	-1.025
70	304	-.381	.060	-.205	-.869
70	305	-.382	.057	-.167	-.736
70	306	-.390	.058	-.212	-.871
70	307	-.380	.060	-.170	-.743
70	308	-.374	.059	-.186	-.691
70	309	-.391	.058	-.176	-.689
70	310	-.374	.056	-.174	-.662
70	311	-.409	.071	-.165	-1.052
70	312	-.404	.065	-.218	-.867
70	313	-.406	.062	-.218	-.797
70	314	-.386	.060	-.186	-.695
70	315	-.384	.056	-.200	-.657
70	316	-.376	.056	-.215	-.601
70	317	-.455	.089	-.229	-1.332
70	318	-.430	.078	-.245	-1.230
70	319	-.416	.067	-.239	-.770
70	320	-.400	.064	-.195	-.891
70	321	-.408	.062	-.201	-.758
70	322	-.387	.061	-.166	-.708
70	323	-.501	.121	-.187	-1.261
70	324	-.482	.108	-.061	-1.290
70	325	-.506	.111	-.037	-1.400
70	326	-.474	.094	-.045	-1.005
70	327	-.461	.085	-.237	-.896
70	328	-.444	.076	-.229	-.771
70	329	-.449	.077	-.207	-.799
70	330	-.427	.075	-.188	-.774
70	331	-.478	.085	-.237	-.922
70	332	-.480	.086	-.197	-.877
70	333	-.506	.092	-.205	-1.140
70	334	-.498	.098	-.245	-1.043
70	335	-.493	.095	-.257	-.989
70	336	-.474	.085	-.197	-.832
70	337	-.464	.098	-.123	-.961
70	338	-.471	.088	-.138	-.961
70	339	-.445	.107	-.120	-1.230
70	340	-.432	.115	-.088	-1.115
70	341	-.445	.104	-.108	-1.091
70	342	-.460	.098	-.049	-.893
70	343	-.506	.101	-.204	-1.054
70	344	-.527	.107	-.231	-1.195
70	345	-.528	.099	-.256	-1.084
70	346	-.499	.092	-.238	-.982
70	347	-.487	.093	-.191	-.944
70	348	-.319	.090	-.047	-.932
70	349	-.336	.090	.029	-.899
70	350	-.356	.103	-.008	-1.043
70	351	-.436	.111	.089	-.978
70	352	-.513	.113	-.004	-1.095
70	353	-.571	.123	-.300	-1.469
70	354	-.535	.106	-.282	-1.203
70	355	-.521	.115	-.248	-1.163
70	356	-.519	.129	-.249	-1.569
70	357	-.531	.128	-.263	-1.361
70	358	-.518	.131	-.225	-1.711
70	359	-.460	.112	-.202	-1.085
70	360	-.252	.086	.084	-.791
70	361	-.259	.080	-.006	-.656
70	362	-.285	.093	.008	-.770
70	363	-.412	.101	.017	-1.054
70	364	-.430	.096	-.181	-1.061
70	365	-.461	.089	-.252	-.994
70	366	-.396	.075	-.213	-.770
70	367	-.478	.107	-.200	-.935
70	368	-.469	.106	-.211	-.914
70	369	-.416	.093	-.168	-.967
70	370	-.520	.109	-.289	-1.568
70	371	-.519	.108	-.247	-1.148
70	372	-.398	.106	-.030	-1.039
70	373	-.389	.086	-.046	-.742
70	374	-.390	.088	.005	-.724
70	401	-.260	.038	-.133	-.418
70	402	-.217	.039	-.030	-.365
70	403	-.184	.041	-.020	-.333
70	404	-.162	.047	.029	-.415
70	405	-.091	.065	.103	-.457
70	406	-.262	.039	-.111	-.461
70	407	-.039	.093	.218	-.527
70	408	-.256	.041	-.097	-.446
70	409	-.125	.046	.031	-.355
70	410	-.078	.052	.098	-.343
70	411	-.024	.062	.159	-.360
70	412	.000	.116	.318	-.583
70	413	-.195	.042	-.008	-.387
70	414	-.063	.056	.128	-.337
70	415	.006	.067	.259	-.285
70	416	.045	.079	.347	-.362
70	417	.094	.143	.477	-.747
70	418	-.292	.094	.076	-.665
70	419	-.211	.133	.284	-.778
70	420	-.170	.151	.360	-.906
70	421	-.077	.186	.443	-.777
70	422	.205	.126	.607	-.691
70	423	-.075	.075	.215	-.350
70	424	.038	.090	.452	-.326
70	425	.171	.113	.515	-.374
70	426	.312	.139	.774	-.181
70	427	.440	.158	.946	-.120
70	428	.484	.182	1.116	-.319
70	429	-.085	.073	.246	-.420
70	430	.064	.093	.573	-.496
70	431	.252	.123	.649	-.208
70	432	.405	.146	.865	-.086
70	433	.508	.170	.940	-.160
70	434	.517	.178	.989	-.364
70	435	-.136	.074	.252	-.445
70	436	.002	.096	.436	-.365
70	437	.205	.133	.636	-.245
70	438	.353	.167	.861	-.194
70	439	.411	.187	.954	-.266
70	440	.398	.195	1.001	-.372
70	441	-.203	.082	.175	-.474
70	442	-.076	.101	.460	-.394
70	443	.097	.131	.663	-.253
70	444	.229	.161	.812	-.275
70	445	.268	.179	.809	-.932
70	446	.240	.184	.766	-.844
70	447	-.259	.089	.146	-.541
70	448	-.144	.104	.313	-.480
70	449	.015	.127	.515	-.406
70	450	.115	.136	.741	-.348
70	451	.137	.149	.826	-.585
70	452	.116	.135	.653	-.381
70	453	-.287	.063	-.085	-.705
70	454	-.191	.053	.005	-.508
70	455	-.123	.048	.088	-.338
70	456	-.056	.041	.108	-.217

APPENDIX A -- PRESSURE DATA: CONFIGURATION A; 1221 BRICKELL BUILDING

WD	TAP	CPMEAN	CPRMS	CPMAX	CPMIN
70	457	-.018	.059	.218	-.435
70	458	-.022	.081	.256	-.547
70	459	-.209	.066	.254	-.509
70	460	-.028	.050	.176	-.301
70	461	-.220	.051	-.024	-.439
70	462	-.259	.101	.093	-.908
70	463	-.231	.105	.147	-.603
70	464	-.019	.081	.296	-.449
70	465	-.433	.091	-.069	-.856
70	466	.092	.099	.524	-.221
70	467	-.435	.089	-.144	-.867
70	468	-.202	.168	.586	-.674
70	469	-.127	.102	.475	-.423
70	470	-.181	.182	.759	-.852
70	471	.049	.085	.446	-.573
70	472	.083	.104	.592	-.121
70	501	-.437	.078	-.235	-1.028
70	502	-.460	.108	-.230	-1.096
70	503	-.480	.123	-.139	-1.132
70	504	-.365	.084	-.108	-.808
70	505	-.113	.117	.369	-.797
70	506	-.453	.087	-.240	-.797
70	507	-.245	.070	-.051	-.594
70	508	-.132	.053	.034	-.440
70	509	-.224	.050	-.081	-.494
70	510	-.133	.045	.071	-.310
70	9124	-.243	.067	.012	-.529
70	9140	.011	.218	.680	-.749
70	9213	-.391	.055	-.222	-.600
70	9218	-.418	.063	-.235	-.792
70	9317	-.441	.084	-.208	-1.264
70	9322	-.395	.063	-.178	-.897
70	9348	-.323	.085	-.097	-.882
70	9355	-.513	.101	-.257	-1.026
80	101	-.294	.101	.015	-.606
80	102	-.211	.127	.138	-.625
80	103	-.180	.157	.217	-.736
80	104	-.169	.059	.034	-.577
80	105	-.263	.044	-.107	-.507
80	106	-.017	.170	.390	-.741
80	107	-.120	.059	.136	-.305
80	108	-.041	.233	.449	-1.176
80	109	-.441	.351	.506	-1.718
80	110	.036	.086	.403	-.602
80	111	-.496	.269	.312	-1.508
80	112	-.379	.323	.442	-1.428
80	113	.016	.113	.283	-.745
80	114	-.072	.050	.160	-.275
80	115	-.277	.041	-.087	-.414
80	116	-.277	.040	-.108	-.443
80	117	-.421	.161	.233	-1.182
80	118	-.401	.179	.347	-1.122
80	119	-.281	.256	.289	-1.345
80	120	-.125	.084	.092	-.851
80	121	-.239	.047	-.009	-.547
80	122	-.280	.044	-.104	-.477
80	123	-.291	.061	.005	-.770
80	124	-.281	.055	-.086	-.631
80	125	-.391	.167	.450	-1.029
80	126	-.363	.186	.457	-1.072
80	127	-.274	.225	.376	-1.092
80	128	-.118	.086	.219	-.643
80	129	-.198	.057	.088	-.601
80	130	-.230	.052	.008	-.539
80	131	-.379	.074	-.132	-.728
80	132	-.250	.063	-.008	-.511
80	133	-.150	.064	.095	-.771
80	134	-.140	.059	.095	-.621
80	135	-.310	.068	.007	-.637
80	136	-.331	.071	-.076	-.670
80	137	-.221	.052	.052	-.439
80	138	-.359	.087	-.076	-.803
80	139	-.448	.084	-.198	-.830
80	140	-.342	.161	.329	-1.205
80	141	-.363	.202	.377	-1.424
80	142	-.201	.201	.246	-.969
80	143	-.151	.099	.185	-.746
80	144	-.102	.056	.185	-.392
80	145	-.178	.048	.045	-.423
80	146	-.219	.051	-.030	-.450
80	147	-.345	.054	-.164	-.575
80	148	-.333	.173	.285	-1.306
80	149	-.324	.198	.189	-1.307
80	150	-.131	.147	.234	-.853
80	151	-.113	.055	.091	-.416
80	152	-.080	.044	.092	-.243
80	153	-.138	.039	.055	-.289
80	154	-.170	.046	-.008	-.342
80	155	-.290	.059	-.129	-.545
80	156	-.284	.191	.102	-1.293
80	157	-.137	.133	.128	-.954
80	158	-.029	.042	.155	-.241
80	159	-.102	.064	.195	-.305
80	160	-.043	.038	.134	-.245
80	161	-.091	.058	.208	-.270
80	162	-.057	.048	.253	-.220
80	163	-.167	.044	.170	-.315
80	164	-.155	.048	.100	-.362
80	165	-.206	.069	-.049	-.580
80	166	-.017	.043	.215	-.176
80	167	-.062	.051	.200	-.265
80	168	-.036	.060	.205	-.245
80	169	-.053	.067	.288	-.312
80	170	-.268	.172	.228	-1.367
80	171	-.340	.211	.139	-1.850
80	172	-.258	.054	.061	-.447
80	173	-.252	.052	.009	-.496
80	174	-.328	.063	-.039	-.616
80	201	-.339	.053	-.155	-.573
80	202	-.433	.056	-.238	-.679
80	203	-.355	.052	-.177	-.587
80	204	-.373	.048	-.213	-.528
80	205	-.350	.048	-.203	-.510
80	206	-.446	.054	-.283	-.647
80	207	-.359	.050	-.172	-.533
80	208	-.363	.052	-.216	-.559
80	209	-.367	.052	-.225	-.552
80	210	-.381	.049	-.260	-.579
80	211	-.372	.052	-.217	-.750
80	212	-.381	.055	-.209	-.672
80	213	-.372	.048	-.220	-.542
80	214	-.388	.048	-.243	-.557
80	215	-.379	.047	-.242	-.549
80	216	-.383	.046	-.250	-.569
80	217	-.387	.051	-.198	-.595
80	218	-.405	.056	-.197	-.644
80	219	-.379	.053	-.207	-.574
80	220	-.381	.053	-.202	-.761
80	221	-.391	.054	-.218	-.869
80	222	-.410	.053	-.211	-.671
80	223	-.397	.056	-.169	-.655
80	224	-.404	.063	-.199	-.758
80	225	-.412	.081	-.210	-.991
80	226	-.424	.080	-.216	-1.007
80	227	-.404	.074	-.204	-.924
80	228	-.403	.063	-.223	-.778
80	229	-.425	.063	-.195	-.662
80	230	-.457	.073	-.214	-.773
80	231	-.417	.095	-.199	-1.140
80	232	-.420	.089	-.209	-1.145
80	233	-.422	.079	-.228	-.914
80	234	-.437	.070	-.238	-.781
80	235	-.436	.067	-.252	-.690
80	236	-.446	.111	-.158	-1.231
80	237	-.458	.112	-.193	-1.278
80	238	-.470	.089	-.233	-1.072
80	239	-.446	.074	-.242	-.873
80	240	-.463	.079	-.214	-.926
80	241	-.620	.240	-.143	-1.767
80	242	-.571	.149	-.124	-1.255

APPENDIX A -- PRESSURE DATA: CONFIGURATION A) 1221 BRICKELL BUILDING

WD	TAP	CPMEAN	CPRMS	CPMAX	CPMIN
80	243	-.538	.135	-.149	-1.321
80	244	-.526	.120	-.197	-1.195
80	245	-.498	.110	-.215	-1.276
80	246	-.392	.085	-.065	-.764
80	247	-.386	.084	-.051	-.778
80	248	-.398	.089	-.125	-1.013
80	249	-.425	.094	-.108	-1.128
80	250	-.466	.098	-.146	-1.058
80	251	-.448	.092	-.101	-1.024
80	252	-.329	.072	-.122	-.631
80	253	-.336	.073	-.130	-.634
80	254	-.332	.085	-.095	-.813
80	255	-.396	.091	-.129	-.800
80	256	-.431	.092	-.122	-.922
80	257	-.439	.091	-.110	-.911
80	258	-.304	.091	-.075	-1.099
80	259	-.295	.096	-.076	-1.216
80	260	-.312	.104	-.096	-1.015
80	261	-.403	.113	-.090	-.961
80	262	-.408	.110	-.070	-1.097
80	263	-.376	.099	-.121	-.931
80	264	-.283	.150	-.029	-1.303
80	265	-.302	.167	-.016	-1.313
80	266	-.325	.149	.063	-1.330
80	267	-.352	.146	.062	-1.080
80	268	-.413	.157	.029	-1.111
80	269	-.407	.157	-.018	-1.198
80	270	-.379	.074	-.187	-.934
80	271	-.386	.069	-.201	-.788
80	272	-.365	.065	-.135	-.660
80	273	-.491	.074	-.230	-.779
80	274	-.391	.072	-.194	-.939
80	275	-.392	.079	-.186	-.920
80	276	-.371	.082	-.128	-.953
80	277	-.447	.076	-.167	-.739
80	278	-.368	.074	-.036	-.642
80	279	-.399	.075	-.132	-.688
80	280	-.386	.078	-.188	-.913
80	281	-.498	.067	-.321	-.860
80	282	-.423	.100	-.174	-1.136
80	283	-.416	.094	-.191	-1.270
80	284	-.407	.067	-.201	-.682
80	285	-.530	.073	-.235	-.878
80	301	-.407	.073	-.185	-.912
80	302	-.377	.064	-.149	-.705
80	303	-.400	.076	-.211	-.938
80	304	-.393	.068	-.200	-.817
80	305	-.404	.065	-.211	-.729
80	306	-.387	.067	-.194	-.725
80	307	-.383	.063	-.173	-.703
80	308	-.464	.069	-.272	-.766
80	309	-.402	.058	-.209	-.691
80	310	-.374	.055	-.192	-.632
80	311	-.413	.083	-.206	-1.006
80	312	-.407	.072	-.220	-.994
80	313	-.415	.062	-.238	-.695
80	314	-.382	.057	-.194	-.592
80	315	-.381	.054	-.215	-.627
80	316	-.381	.060	-.203	-.654
80	317	-.463	.102	-.192	-1.363
80	318	-.441	.089	-.196	-1.187
80	319	-.418	.067	-.240	-.871
80	320	-.400	.061	-.230	-.834
80	321	-.403	.059	-.227	-.766
80	322	-.388	.058	-.210	-.731
80	323	-.497	.105	-.249	-.948
80	324	-.489	.102	-.257	-.934
80	325	-.510	.105	-.260	-1.124
80	326	-.482	.090	-.251	-.860
80	327	-.475	.077	-.255	-.880
80	328	-.456	.065	-.257	-.749
80	329	-.457	.067	-.258	-.886
80	330	-.441	.066	-.237	-.832
80	331	-.473	.079	-.269	-.865
80	332	-.477	.079	-.257	-.852
80	333	-.498	.080	-.243	-.976
80	334	-.492	.083	-.180	-.880
80	335	-.488	.084	-.279	-.906
80	336	-.474	.076	-.218	-.825
80	337	-.475	.084	-.168	-.872
80	338	-.484	.083	-.173	-.823
80	339	-.472	.098	-.039	-1.148
80	340	-.467	.108	-.100	-.936
80	341	-.474	.099	-.086	-.833
80	342	-.487	.097	-.102	-.887
80	343	-.504	.089	-.269	-.860
80	344	-.518	.095	-.287	-.975
80	345	-.518	.090	-.267	-1.246
80	346	-.497	.084	-.265	-.924
80	347	-.500	.084	-.290	-.880
80	348	-.334	.080	-.084	-.777
80	349	-.344	.079	-.103	-.782
80	350	-.360	.087	-.100	-.699
80	351	-.427	.097	-.164	-.834
80	352	-.486	.105	.016	-.982
80	353	-.545	.126	-.225	-1.422
80	354	-.522	.115	-.274	-1.313
80	355	-.532	.108	-.271	-1.247
80	356	-.513	.116	-.239	-1.273
80	357	-.521	.115	-.247	-1.239
80	358	-.515	.108	-.230	-1.059
80	359	-.483	.113	-.157	-1.118
80	360	-.288	.082	-.025	-.674
80	361	-.284	.074	.011	-.629
80	362	-.301	.078	-.088	-.642
80	363	-.402	.084	-.169	-.763
80	364	-.448	.093	-.150	-.793
80	365	-.426	.082	-.203	-.870
80	366	-.321	.061	-.120	-.585
80	367	-.522	.112	-.238	-1.013
80	368	-.520	.118	-.228	-.968
80	369	-.401	.103	-.119	-.897
80	370	-.515	.108	-.274	-1.139
80	371	-.525	.107	-.299	-1.282
80	372	-.495	.093	-.121	-.963
80	373	-.493	.082	-.196	-.896
80	374	-.500	.085	-.166	-.929
80	401	-.246	.041	-.106	-.389
80	402	-.204	.040	-.048	-.338
80	403	-.177	.042	.009	-.337
80	404	-.155	.047	.025	-.360
80	405	-.076	.056	.118	-.331
80	406	-.320	.046	-.157	-.489
80	407	-.029	.068	.202	-.397
80	408	-.225	.042	-.075	-.386
80	409	-.103	.048	.054	-.283
80	410	-.062	.054	.116	-.242
80	411	-.014	.063	.219	-.209
80	412	.020	.079	.314	-.417
80	413	-.166	.043	-.011	-.340
80	414	-.028	.058	.159	-.220
80	415	.034	.069	.258	-.207
80	416	.065	.078	.332	-.207
80	417	.118	.090	.390	-.294
80	418	-.325	.092	.066	-.675
80	419	-.296	.121	.208	-.717
80	420	-.270	.139	.327	-.733
80	421	-.233	.167	.413	-.734
80	422	.114	.210	.644	-1.033
80	423	-.022	.082	.260	-.290
80	424	.099	.099	.442	-.199
80	425	.221	.119	.590	-.140
80	426	.346	.141	.773	-.130
80	427	.385	.156	1.002	-.083
80	428	.405	.162	.894	-.059
80	429	-.010	.080	.261	-.232
80	430	.143	.096	.468	-.157
80	431	.333	.134	.746	-.016
80	432	.455	.157	.991	.023
80	433	.498	.167	.968	.018

APPENDIX A -- PRESSURE DATA: CONFIGURATION A: 1221 BRICKELL BUILDING

WD	TAP	CPMEAN	CPRMS	CPMAX	CPMIN
80	434	.419	.161	.859	-.116
80	435	-.053	.070	.264	-.287
80	436	.123	.089	.454	-.171
80	437	.348	.121	.776	-.013
80	438	.468	.144	1.003	.075
80	439	.443	.148	.976	.010
80	440	.350	.149	.848	-.323
80	441	-.088	.072	.199	-.646
80	442	.077	.091	.431	-.462
80	443	.297	.124	.768	-.313
80	444	.409	.142	.949	-.169
80	445	.382	.146	.870	-.203
80	446	.266	.136	.717	-.244
80	447	-.142	.076	.119	-.468
80	448	.020	.095	.428	-.353
80	449	.225	.126	.699	-.304
80	450	.317	.146	.847	-.197
80	451	.292	.143	.862	-.217
80	452	.189	.109	.749	-.277
80	453	-.219	.053	-.037	-.550
80	454	-.129	.046	.052	-.372
80	455	-.056	.048	.112	-.263
80	456	-.023	.042	.147	-.307
80	457	.020	.052	.227	-.239
80	458	-.002	.062	.238	-.265
80	459	-.187	.046	.061	-.357
80	460	-.003	.038	.155	-.148
80	461	-.207	.051	.011	-.422
80	462	-.203	.072	.211	-.521
80	463	-.211	.106	.252	-.541
80	464	-.010	.041	.196	-.137
80	465	-.396	.082	-.155	-.765
80	466	-.084	.064	.178	-.272
80	467	-.429	.079	-.202	-.850
80	468	-.015	.152	.520	-.502
80	469	.002	.104	.677	-.226
80	470	.082	.118	.634	-.441
80	471	.025	.067	.382	-.232
80	472	-.025	.070	.321	-.242
80	501	-.412	.064	-.233	-.822
80	502	-.403	.067	-.222	-.942
80	503	-.420	.080	-.230	-.944
80	504	-.333	.085	-.091	-.680
80	505	-.040	.046	.112	-.385
80	506	-.438	.076	-.242	-.797
80	507	-.282	.072	-.032	-.621
80	508	-.142	.051	.008	-.395
80	509	-.204	.045	-.044	-.395
80	510	-.162	.046	-.001	-.372
80	9124	-.287	.051	-.097	-.600

WD	TAP	CPMEAN	CPRMS	CPMAX	CPMIN
80	9140	-.346	.160	.271	-.914
80	9213	-.364	.050	-.217	-.611
80	9218	-.386	.058	-.230	-.713
80	9317	-.449	.090	-.234	-.979
80	9322	-.383	.056	-.205	-.593
80	9348	-.355	.082	-.070	-.837
80	9355	-.512	.092	-.292	-1.173
90	101	-.373	.070	-.160	-.770
90	102	-.366	.081	-.037	-.773
90	103	-.486	.137	.037	-.950
90	104	-.343	.121	-.106	-.834
90	105	-.362	.087	-.077	-.730
90	106	-.518	.262	.177	-1.402
90	107	-.241	.060	-.083	-.897
90	108	-.745	.366	.203	-1.988
90	109	-.861	.291	-.037	-2.304
90	110	-.196	.154	.130	-1.036
90	111	-.911	.276	-.190	-1.904
90	112	-.819	.267	-.042	-1.961
90	113	-.350	.268	.154	-1.248
90	114	-.169	.056	-.018	-.638
90	115	-.329	.043	-.157	-.616
90	116	-.300	.044	-.151	-.507
90	117	-.606	.130	-.200	-1.335
90	118	-.590	.132	-.146	-1.412
90	119	-.677	.189	.167	-1.488
90	120	-.373	.174	.039	-1.057
90	121	-.337	.113	.046	-1.054
90	122	-.329	.094	-.042	-1.303
90	123	-.400	.130	-.090	-1.226
90	124	-.338	.107	-.023	-1.595
90	125	-.598	.159	-.141	-1.434
90	126	-.582	.161	.013	-1.349
90	127	-.641	.224	.015	-1.675
90	128	-.332	.188	.058	-1.423
90	129	-.317	.123	.022	-.921
90	130	-.305	.104	-.040	-.884
90	131	-.415	.093	-.137	-.917
90	132	-.308	.089	.088	-.819
90	133	-.265	.123	.067	-.959
90	134	-.240	.114	.083	-.925
90	135	-.366	.098	-.045	-.905
90	136	-.347	.080	-.109	-.782
90	137	-.266	.068	.005	-.779
90	138	-.374	.095	-.122	-.819
90	139	-.461	.090	-.210	-.818
90	140	-.559	.157	-.096	-1.418
90	141	-.590	.161	-.037	-1.304
90	142	-.500	.212	.093	-1.508
90	143	-.339	.187	.109	-1.186

WD	TAP	CPMEAN	CPRMS	CPMAX	CPMIN
90	144	-.188	.087	.056	-.713
90	145	-.216	.056	.039	-.510
90	146	-.237	.054	-.066	-.549
90	147	-.353	.055	-.175	-.588
90	148	-.636	.237	-.077	-1.782
90	149	-.654	.262	.024	-2.014
90	150	-.302	.201	.151	-1.122
90	151	-.173	.056	.034	-.573
90	152	-.141	.040	.026	-.295
90	153	-.173	.039	-.040	-.314
90	154	-.189	.047	-.047	-.399
90	155	-.301	.061	-.130	-.606
90	156	-.561	.223	-.045	-1.536
90	157	-.348	.224	.171	-1.401
90	158	-.098	.051	.086	-.416
90	159	-.216	.049	-.015	-.414
90	160	-.153	.069	-.003	-.573
90	161	-.182	.047	.010	-.375
90	162	-.129	.042	.013	-.286
90	163	-.217	.044	-.085	-.377
90	164	-.184	.053	-.033	-.445
90	165	-.227	.074	-.061	-.607
90	166	-.072	.048	.093	-.303
90	167	-.128	.083	.119	-.479
90	168	-.135	.062	.046	-.467
90	169	-.181	.064	.005	-.453
90	170	-.582	.231	-.045	-1.984
90	171	-.708	.279	.063	-2.209
90	172	-.278	.067	-.033	-.631
90	173	-.269	.065	-.023	-.639
90	174	-.325	.074	-.117	-.641
90	201	-.341	.057	-.139	-.585
90	202	-.434	.059	-.222	-.666
90	203	-.355	.053	-.163	-.561
90	204	-.369	.057	-.205	-.694
90	205	-.349	.060	-.192	-.746
90	206	-.450	.069	-.264	-.895
90	207	-.361	.062	-.187	-.684
90	208	-.359	.056	-.172	-.632
90	209	-.362	.054	-.182	-.635
90	210	-.390	.051	-.230	-.625
90	211	-.369	.057	-.201	-.620
90	212	-.378	.065	-.168	-.742
90	213	-.361	.056	-.177	-.683
90	214	-.391	.056	-.208	-.659
90	215	-.369	.054	-.211	-.633
90	216	-.374	.052	-.184	-.625
90	217	-.380	.063	-.197	-.785
90	218	-.420	.074	-.213	-.934
90	219	-.374	.072	-.133	-.708

APPENDIX A -- PRESSURE DATA: CONFIGURATION A; 1221 BRICKELL BUILDING

WD	TAP	CPMEAN	CPRMS	CPMAX	CPMIN
90	220	-.366	.066	-.165	-.754
90	221	-.372	.061	-.182	-.658
90	222	-.396	.057	-.208	-.699
90	223	-.373	.061	-.141	-.665
90	224	-.393	.069	-.129	-.718
90	225	-.378	.080	-.138	-1.021
90	226	-.403	.079	-.176	-1.047
90	227	-.375	.070	-.184	-.899
90	228	-.380	.054	-.180	-.596
90	229	-.413	.063	-.165	-.658
90	230	-.470	.078	-.208	-.792
90	231	-.396	.089	-.071	-.871
90	232	-.401	.089	-.160	-2.286
90	233	-.401	.069	-.210	-.892
90	234	-.433	.063	-.243	-.723
90	235	-.426	.068	-.219	-.703
90	236	-.444	.125	-.096	-1.367
90	237	-.450	.111	-.180	-1.088
90	238	-.465	.086	-.243	-.843
90	239	-.434	.079	-.219	-.838
90	240	-.442	.082	-.191	-.938
90	241	-.561	.202	-.090	-1.536
90	242	-.562	.150	-.179	-1.287
90	243	-.521	.140	-.189	-1.129
90	244	-.502	.134	-.182	-1.125
90	245	-.471	.117	-.180	-1.046
90	246	-.381	.090	-.125	-.868
90	247	-.363	.087	-.056	-.843
90	248	-.382	.082	-.141	-.759
90	249	-.423	.095	-.185	-.887
90	250	-.466	.100	-.117	-.983
90	251	-.433	.094	-.066	-.886
90	252	-.313	.076	-.115	-.785
90	253	-.320	.077	-.110	-.839
90	254	-.319	.077	-.106	-.711
90	255	-.388	.086	-.138	-.894
90	256	-.428	.107	-.144	-1.118
90	257	-.430	.107	-.120	-1.185
90	258	-.302	.095	-.078	-.976
90	259	-.285	.100	-.091	-1.047
90	260	-.309	.104	-.108	-.869
90	261	-.378	.104	-.123	-.971
90	262	-.413	.133	-.078	-1.380
90	263	-.375	.122	-.096	-1.169
90	264	-.286	.139	-.057	-1.317
90	265	-.301	.153	-.070	-1.404
90	266	-.343	.155	-.078	-1.334
90	267	-.293	.124	.180	-1.072
90	268	-.373	.178	.086	-1.451
90	269	-.397	.190	.106	-1.462
90	270	-.363	.078	-.039	-.826
90	271	-.373	.077	-.089	-.868
90	272	-.362	.063	-.142	-.663
90	273	-.488	.076	-.220	-.836
90	274	-.377	.079	-.111	-.697
90	275	-.372	.079	-.141	-.730
90	276	-.350	.075	-.167	-.709
90	277	-.441	.072	-.131	-.700
90	278	-.375	.071	-.114	-.651
90	279	-.404	.082	-.136	-.715
90	280	-.361	.073	-.162	-.754
90	281	-.473	.063	-.296	-.757
90	282	-.403	.100	-.054	-.971
90	283	-.408	.100	-.168	-1.176
90	284	-.398	.074	-.154	-.703
90	285	-.514	.084	-.236	-.915
90	301	-.434	.101	-.179	-1.113
90	302	-.395	.087	-.118	-.891
90	303	-.405	.106	-.136	-1.458
90	304	-.394	.089	-.138	-.961
90	305	-.421	.094	-.157	-1.042
90	306	-.400	.103	-.106	-.936
90	307	-.408	.096	-.127	-1.080
90	308	-.490	.095	-.207	-1.153
90	309	-.424	.081	-.191	-1.020
90	310	-.388	.075	-.184	-.974
90	311	-.440	.135	-.172	-1.491
90	312	-.428	.109	-.175	-1.066
90	313	-.442	.099	-.176	-1.132
90	314	-.399	.082	-.181	-1.167
90	315	-.395	.074	-.192	-.996
90	316	-.399	.074	-.183	-.695
90	317	-.480	.136	-.184	-1.681
90	318	-.466	.117	-.187	-1.344
90	319	-.434	.082	-.170	-.822
90	320	-.417	.070	-.210	-.805
90	321	-.407	.065	-.222	-.758
90	322	-.399	.064	-.219	-.741
90	323	-.532	.138	-.118	-1.342
90	324	-.526	.129	-.052	-1.365
90	325	-.536	.136	-.200	-1.468
90	326	-.506	.106	-.192	-1.042
90	327	-.487	.096	-.238	-1.130
90	328	-.471	.076	-.270	-.773
90	329	-.458	.075	-.246	-.745
90	330	-.450	.074	-.244	-.728
90	331	-.489	.094	-.144	-1.117
90	332	-.497	.094	-.185	-1.114
90	333	-.567	.090	-.200	-1.246
90	334	-.519	.099	-.219	-1.179
90	335	-.504	.095	-.229	-.907
90	336	-.474	.095	-.160	-1.457
90	337	-.453	.100	-.112	-1.365
90	338	-.478	.100	-.068	-1.007
90	339	-.448	.100	-.098	-.962
90	340	-.425	.099	-.068	-.979
90	341	-.427	.097	-.079	-.868
90	342	-.463	.107	-.059	-.909
90	343	-.528	.104	-.160	-1.084
90	344	-.562	.105	-.290	-1.134
90	345	-.548	.095	-.285	-1.051
90	346	-.534	.092	-.279	-1.000
90	347	-.522	.086	-.264	-.892
90	348	-.326	.081	-.013	-.608
90	349	-.313	.071	-.046	-.604
90	350	-.310	.078	.003	-.645
90	351	-.381	.097	-.052	-.710
90	352	-.474	.128	-.039	-.965
90	353	-.617	.146	-.248	-1.490
90	354	-.605	.145	-.302	-1.420
90	355	-.610	.143	-.262	-1.497
90	356	-.594	.151	-.249	-1.519
90	357	-.592	.153	-.248	-1.347
90	358	-.548	.130	-.088	-1.312
90	359	-.438	.123	-.144	-1.213
90	360	-.279	.083	-.007	-.595
90	361	-.265	.070	-.011	-.565
90	362	-.271	.063	-.020	-.542
90	363	-.330	.076	-.108	-.697
90	364	-.385	.089	-.144	-.757
90	365	-.430	.101	-.182	-1.000
90	366	-.253	.057	-.084	-.483
90	367	-.488	.111	-.160	-.885
90	368	-.482	.114	-.155	-.874
90	369	-.334	.101	-.074	-.837
90	370	-.598	.151	-.271	-1.621
90	371	-.606	.133	-.294	-1.396
90	372	-.432	.098	-.073	-.896
90	373	-.453	.091	-.106	-.887
90	374	-.456	.095	-.078	-.823
90	401	-.226	.044	.010	-.380
90	402	-.184	.039	-.033	-.326
90	403	-.167	.041	.003	-.318
90	404	-.147	.045	.053	-.338
90	405	-.098	.052	.086	-.276
90	406	-.285	.050	-.050	-.477
90	407	-.064	.059	.152	-.263
90	408	-.187	.048	-.013	-.387
90	409	-.082	.052	.145	-.302
90	410	-.051	.056	.138	-.221

APPENDIX A -- PRESSURE DATA: CONFIGURATION A; 1221 BRICKELL BUILDING

WD	TAP	CPMEAN	CPRMS	CPMAX	CPMIN
90	411	-.020	.061	.174	-.192
90	412	-.029	.064	.163	-.217
90	413	-.132	.053	.054	-.370
90	414	-.013	.066	.234	-.208
90	415	.032	.073	.268	-.171
90	416	.047	.078	.291	-.193
90	417	.033	.079	.322	-.203
90	418	-.352	.126	.138	-.881
90	419	-.341	.134	.359	-.855
90	420	-.320	.144	.444	-.956
90	421	-.313	.160	.521	-.989
90	422	-.239	.245	.396	-1.320
90	423	.063	.100	.459	-.279
90	424	.171	.116	.611	-.176
90	425	.253	.132	.732	-.144
90	426	.326	.146	.833	-.050
90	427	.332	.150	.793	-.083
90	428	.258	.142	.853	-.211
90	429	.069	.098	.520	-.303
90	430	.240	.115	.601	-.123
90	431	.402	.141	.902	.015
90	432	.460	.165	1.002	-.017
90	433	.413	.164	.930	-.083
90	434	.239	.147	.834	-.187
90	435	.026	.084	.306	-.271
90	436	.197	.104	.601	-.107
90	437	.404	.133	.940	.033
90	438	.466	.149	.919	.057
90	439	.370	.141	.834	-.007
90	440	.213	.127	.671	-.179
90	441	-.029	.082	.288	-.288
90	442	.132	.101	.498	-.185
90	443	.340	.124	.766	.001
90	444	.429	.136	.914	-.012
90	445	.335	.135	.781	-.230
90	446	.158	.124	.599	-.432
90	447	-.081	.086	.335	-.375
90	448	.086	.095	.444	-.269
90	449	.288	.115	.720	-.057
90	450	.344	.124	.837	.033
90	451	.271	.117	.737	-.060
90	452	.127	.091	.520	-.144
90	453	-.200	.052	-.037	-.474
90	454	-.112	.040	.036	-.303
90	455	-.031	.037	.141	-.162
90	456	-.001	.037	.148	-.126
90	457	.011	.041	.168	-.146
90	458	-.067	.058	.130	-.364
90	459	-.146	.045	.108	-.318
90	460	-.035	.043	.139	-.172

WD	TAP	CPMEAN	CPRMS	CPMAX	CPMIN
90	461	-.184	.045	-.021	-.408
90	462	-.182	.053	.016	-.549
90	463	-.144	.085	.165	-.422
90	464	-.041	.037	.095	-.193
90	465	-.340	.091	-.076	-.696
90	466	-.155	.058	.155	-.356
90	467	-.368	.089	-.114	-.720
90	468	.073	.118	.497	-.348
90	469	.070	.095	.483	-.223
90	470	.131	.095	.576	-.090
90	471	.055	.083	.456	-.131
90	472	-.125	.056	.066	-.438
90	501	-.401	.062	-.200	-.703
90	502	-.367	.060	-.192	-.660
90	503	-.389	.075	-.091	-.808
90	504	-.278	.072	-.075	-.625
90	505	-.088	.051	.087	-.271
90	506	-.405	.083	-.124	-.744
90	507	-.289	.060	-.124	-.566
90	508	-.180	.045	-.033	-.460
90	509	-.193	.045	-.035	-.380
90	510	-.146	.046	-.025	-.348
90	9124	-.351	.099	.043	-.996
90	9140	-.545	.158	-.041	-1.548
90	9213	-.357	.054	-.172	-.899
90	9218	-.383	.068	-.187	-.722
90	9317	-.496	.141	-.190	-1.890
90	9322	-.398	.066	-.215	-.707
90	9348	-.338	.083	-.068	-.683
90	9355	-.586	.136	-.283	-1.328
100	101	-.411	.095	-.109	-.954
100	102	-.410	.093	-.104	-.883
100	103	-.631	.134	-.171	-1.071
100	104	-.450	.116	-.098	-.901
100	105	-.425	.105	-.105	-.896
100	106	-.775	.258	-.020	-1.565
100	107	-.462	.176	-.047	-1.209
100	108	-.673	.232	-.057	-1.716
100	109	-.661	.213	-.109	-1.732
100	110	-.542	.201	-.071	-1.278
100	111	-.788	.231	-.222	-1.795
100	112	-.695	.219	-.159	-1.658
100	113	-.681	.213	-.051	-1.565
100	114	-.424	.161	.154	-1.285
100	115	-.435	.120	-.057	-1.135
100	116	-.359	.105	-.086	-1.110
100	117	-.562	.140	-.170	-1.273
100	118	-.545	.140	-.164	-1.259
100	119	-.675	.165	-.232	-1.657
100	120	-.535	.173	-.027	-1.235

WD	TAP	CPMEAN	CPRMS	CPMAX	CPMIN
100	121	-.476	.178	.036	-1.352
100	122	-.459	.200	.044	-1.364
100	123	-.561	.196	.007	-1.448
100	124	-.483	.208	.019	-1.451
100	125	-.594	.148	-.229	-1.444
100	126	-.577	.149	-.212	-1.548
100	127	-.702	.177	-.249	-1.815
100	128	-.538	.170	.012	-1.300
100	129	-.474	.164	.008	-1.338
100	130	-.442	.174	.006	-1.338
100	131	-.485	.137	.069	-1.117
100	132	-.398	.128	.041	-.908
100	133	-.482	.179	-.011	-1.123
100	134	-.443	.179	.039	-1.149
100	135	-.504	.164	.049	-1.078
100	136	-.396	.120	-.071	-.884
100	137	-.317	.121	.024	-.887
100	138	-.360	.112	-.028	-.816
100	139	-.443	.109	-.047	-.846
100	140	-.621	.154	-.244	-1.385
100	141	-.661	.152	-.212	-1.378
100	142	-.659	.179	-.080	-1.476
100	143	-.621	.226	.019	-1.667
100	144	-.315	.143	.092	-1.047
100	145	-.250	.093	.015	-.774
100	146	-.233	.069	.018	-.573
100	147	-.338	.063	-.156	-.617
100	148	-.843	.265	-.266	-2.108
100	149	-.899	.304	-.290	-2.614
100	150	-.468	.261	.137	-1.223
100	151	-.243	.081	.039	-.718
100	152	-.188	.045	-.047	-.439
100	153	-.200	.041	-.065	-.374
100	154	-.196	.046	-.051	-.367
100	155	-.296	.058	-.121	-.531
100	156	-.619	.192	-.195	-1.675
100	157	-.501	.200	.073	-1.514
100	158	-.229	.100	.042	-.845
100	159	-.309	.060	-.136	-.570
100	160	-.295	.096	-.057	-.935
100	161	-.234	.045	-.093	-.425
100	162	-.182	.039	-.044	-.317
100	163	-.254	.041	-.060	-.402
100	164	-.192	.045	-.032	-.371
100	165	-.220	.055	-.086	-.526
100	166	-.138	.044	.032	-.331
100	167	-.239	.084	.101	-.595
100	168	-.262	.070	-.040	-.585
100	169	-.286	.063	-.081	-.531
100	170	-.814	.268	-.150	-2.134

APPENDIX A -- PRESSURE DATA: CONFIGURATION A; 1221 BRICKELL BUILDING

WD	TAP	CPMEAN	CPRMS	CPMAX	CPMIN
100	171	-.969	.341	-.172	-3.101
100	172	-.312	.111	-.001	-.856
100	173	-.296	.107	.012	-.840
100	174	-.337	.098	-.006	-.777
100	201	-.347	.073	-.116	-.718
100	202	-.435	.075	-.222	-.841
100	203	-.350	.064	-.164	-.740
100	204	-.363	.064	-.191	-.662
100	205	-.349	.072	-.166	-.726
100	206	-.448	.081	-.222	-.891
100	207	-.372	.077	-.132	-.731
100	208	-.361	.069	-.164	-.688
100	209	-.356	.061	-.196	-.647
100	210	-.396	.058	-.230	-.643
100	211	-.371	.073	-.127	-.976
100	212	-.406	.094	-.169	-.830
100	213	-.389	.114	-.083	-1.415
100	214	-.415	.107	-.136	-1.505
100	215	-.381	.082	-.175	-1.002
100	216	-.374	.068	-.128	-.707
100	217	-.382	.089	-.141	-.936
100	218	-.428	.106	-.143	-1.032
100	219	-.407	.111	-.079	-.898
100	220	-.389	.094	-.157	-.837
100	221	-.371	.073	-.151	-.818
100	222	-.397	.064	-.193	-.755
100	223	-.378	.080	-.107	-.759
100	224	-.409	.105	-.092	-.997
100	225	-.402	.114	-.066	-.850
100	226	-.417	.102	-.086	-.804
100	227	-.366	.078	-.132	-.731
100	228	-.367	.065	-.157	-.671
100	229	-.402	.085	-.123	-.805
100	230	-.464	.107	-.141	-.985
100	231	-.413	.115	-.054	-1.148
100	232	-.395	.094	-.171	-.818
100	233	-.383	.075	-.179	-.688
100	234	-.418	.076	-.203	-.884
100	235	-.411	.093	-.104	-.812
100	236	-.448	.139	-.092	-1.313
100	237	-.432	.110	-.159	-.988
100	238	-.441	.088	-.208	-.936
100	239	-.409	.089	-.195	-1.323
100	240	-.433	.105	-.109	-.939
100	241	-.526	.200	-.016	-1.510
100	242	-.570	.181	-.109	-1.354
100	243	-.527	.168	-.155	-1.368
100	244	-.484	.147	-.111	-1.165
100	245	-.452	.138	.002	-1.239
100	246	-.390	.110	-.081	-.943
100	247	-.369	.108	-.089	-.900
100	248	-.394	.110	-.106	-1.030
100	249	-.424	.122	-.151	-1.116
100	250	-.450	.131	-.116	-1.218
100	251	-.408	.121	.002	-1.047
100	252	-.311	.090	-.053	-.758
100	253	-.319	.094	-.066	-.800
100	254	-.276	.091	-.030	-.921
100	255	-.376	.108	-.061	-.984
100	256	-.384	.136	-.092	-1.578
100	257	-.377	.135	-.018	-1.475
100	258	-.272	.083	-.052	-.933
100	259	-.251	.084	-.028	-1.070
100	260	-.271	.081	-.065	-.801
100	261	-.335	.104	-.031	-.956
100	262	-.396	.158	-.032	-1.490
100	263	-.358	.147	-.046	-1.239
100	264	-.230	.082	-.087	-.972
100	265	-.237	.088	-.086	-1.038
100	266	-.283	.093	-.064	-.906
100	267	-.238	.092	.080	-.729
100	268	-.335	.179	.193	-1.416
100	269	-.365	.198	.265	-1.490
100	270	-.368	.114	-.056	-.925
100	271	-.349	.101	-.029	-.825
100	272	-.334	.083	-.060	-.764
100	273	-.454	.104	-.136	-.961
100	274	-.368	.113	-.036	-.907
100	275	-.336	.100	-.066	-.752
100	276	-.308	.089	-.022	-.669
100	277	-.385	.081	-.120	-.753
100	278	-.332	.085	-.046	-.729
100	279	-.374	.104	-.075	-.890
100	280	-.329	.088	-.105	-.716
100	281	-.411	.077	-.154	-.705
100	282	-.387	.124	.056	-.897
100	283	-.370	.111	-.085	-1.062
100	284	-.343	.088	-.047	-.826
100	285	-.444	.101	-.102	-.920
100	301	-.458	.117	-.136	-1.129
100	302	-.431	.112	-.112	-1.050
100	303	-.435	.121	-.099	-1.137
100	304	-.444	.117	-.106	-.978
100	305	-.515	.142	-.111	-1.183
100	306	-.469	.165	-.031	-1.201
100	307	-.556	.197	-.101	-1.477
100	308	-.540	.167	-.184	-1.402
100	309	-.515	.150	-.171	-1.327
100	310	-.473	.137	-.152	-1.242
100	311	-.450	.160	-.012	-1.445
100	312	-.445	.136	-.041	-1.206
100	313	-.523	.154	-.096	-1.688
100	314	-.512	.162	-.157	-1.419
100	315	-.489	.142	-.134	-1.274
100	316	-.461	.142	-.125	-1.779
100	317	-.612	.209	-.105	-1.829
100	318	-.501	.166	-.044	-1.416
100	319	-.502	.142	-.155	-1.236
100	320	-.465	.114	-.204	-1.115
100	321	-.560	.111	-.294	-1.108
100	322	-.455	.102	-.217	-.971
100	323	-.564	.205	-.096	-1.808
100	324	-.521	.176	.118	-1.495
100	325	-.642	.200	-.126	-2.004
100	326	-.512	.147	-.010	-1.244
100	327	-.541	.135	.029	-1.196
100	328	-.510	.103	-.206	-1.277
100	329	-.609	.108	-.299	-1.509
100	330	-.500	.098	-.220	-1.185
100	331	-.469	.127	-.032	-1.113
100	332	-.452	.120	-.049	-.957
100	333	-.584	.135	-.080	-1.120
100	334	-.522	.140	-.021	-1.165
100	335	-.527	.146	.009	-1.216
100	336	-.421	.118	.028	-1.124
100	337	-.501	.127	-.066	-1.071
100	338	-.418	.139	-.000	-1.007
100	339	-.407	.116	-.069	-.843
100	340	-.331	.098	-.051	-.719
100	341	-.432	.113	-.105	-.912
100	342	-.372	.134	.018	-.845
100	343	-.471	.135	-.054	-1.109
100	344	-.577	.150	-.098	-1.288
100	345	-.702	.150	-.154	-1.785
100	346	-.579	.124	-.249	-1.450
100	347	-.585	.120	-.227	-1.509
100	348	-.272	.086	.046	-.697
100	349	-.344	.069	-.061	-.604
100	350	-.232	.057	.011	-.500
100	351	-.274	.082	-.032	-.672
100	352	-.297	.154	.077	-.872
100	353	-.757	.220	.105	-1.528
100	354	-.766	.235	-.302	-2.141
100	355	-.766	.223	-.321	-1.948
100	356	-.608	.186	-.044	-1.430
100	357	-.786	.189	-.320	-1.722
100	358	-.368	.160	.073	-1.347
100	359	-.318	.091	-.093	-.864
100	360	-.232	.080	.064	-.514
100	361	-.316	.071	.056	-.558

APPENDIX A -- PRESSURE DATA; CONFIGURATION A; 1221 BRICKELL BUILDING

WD	TAP	CPMEAN	CPRMS	CPMAX	CPMIN
100	362	-.229	.053	-.071	-.407
100	363	-.213	.057	.041	-.429
100	364	-.291	.071	-.089	-.658
100	365	-.496	.130	-.189	-1.180
100	366	-.187	.050	-.003	-.427
100	367	-.357	.090	-.076	-.755
100	368	-.334	.082	-.076	-.674
100	369	-.305	.081	-.042	-.674
100	370	-.747	.268	-.173	-2.487
100	371	-.723	.230	-.238	-1.891
100	372	-.373	.112	.006	-1.005
100	373	-.394	.125	-.034	-.866
100	374	-.385	.127	.007	-.830
100	401	-.160	.049	.068	-.340
100	402	-.168	.042	-.006	-.340
100	403	-.145	.039	.003	-.319
100	404	-.233	.045	-.077	-.406
100	405	-.113	.051	.065	-.342
100	406	-.199	.055	.049	-.400
100	407	-.100	.055	.074	-.328
100	408	-.218	.060	-.007	-.478
100	409	-.058	.057	.141	-.236
100	410	-.054	.056	.177	-.246
100	411	-.027	.057	.230	-.215
100	412	-.170	.061	.065	-.415
100	413	-.108	.063	.143	-.320
100	414	.005	.069	.230	-.216
100	415	.048	.070	.264	-.163
100	416	-.040	.073	.217	-.257
100	417	-.060	.062	.207	-.302
100	418	-.366	.166	.169	-1.013
100	419	-.340	.141	.264	-.836
100	420	-.439	.152	.238	-.901
100	421	-.362	.149	.394	-.838
100	422	-.412	.196	.372	-1.181
100	423	.110	.126	.525	-.304
100	424	.229	.137	.718	-.238
100	425	.273	.143	.791	-.100
100	426	.309	.145	.773	-.073
100	427	.271	.146	.743	-.163
100	428	.160	.130	.602	-.239
100	429	.129	.125	.524	-.273
100	430	.300	.135	.698	-.169
100	431	.440	.158	.982	.010
100	432	.446	.155	.893	.036
100	433	.345	.149	.801	-.080
100	434	.147	.137	.618	-.292
100	435	.080	.103	.559	-.239
100	436	.275	.113	.644	-.084
100	437	.466	.133	.907	.088

WD	TAP	CPMEAN	CPRMS	CPMAX	CPMIN
100	438	.468	.140	.977	.088
100	439	.317	.127	.789	-.055
100	440	.123	.113	.473	-.294
100	441	.041	.094	.465	-.316
100	442	.202	.112	.630	-.136
100	443	.390	.129	.873	.037
100	444	.421	.136	.997	.062
100	445	.278	.125	.797	-.100
100	446	.075	.112	.512	-.283
100	447	-.034	.092	.344	-.372
100	448	.150	.098	.588	-.091
100	449	.331	.114	.801	.033
100	450	.334	.119	.814	.024
100	451	.209	.110	.680	-.108
100	452	.029	.084	.378	-.236
100	453	-.186	.058	.011	-.407
100	454	-.098	.041	.071	-.342
100	455	-.016	.038	.138	-.152
100	456	-.008	.039	.131	-.146
100	457	-.016	.044	.172	-.184
100	458	-.149	.063	.090	-.422
100	459	-.084	.047	.123	-.272
100	460	-.086	.040	.116	-.267
100	461	-.147	.037	-.010	-.294
100	462	-.149	.040	-.011	-.340
100	463	-.113	.060	.168	-.327
100	464	-.078	.038	.114	-.224
100	465	-.215	.077	-.007	-.522
100	466	-.241	.064	.005	-.512
100	467	-.241	.075	-.010	-.508
100	468	.091	.097	.605	-.227
100	469	.112	.096	.572	-.139
100	470	.144	.100	.701	-.100
100	471	.076	.096	.541	-.174
100	472	-.243	.063	-.038	-.528
100	501	-.354	.079	-.073	-.815
100	502	-.348	.062	-.131	-.655
100	503	-.396	.095	-.125	-.849
100	504	-.216	.060	-.014	-.459
100	505	-.161	.049	.016	-.363
100	506	-.307	.088	-.066	-.667
100	507	-.300	.058	-.101	-.530
100	508	-.211	.050	-.074	-.427
100	509	-.178	.043	-.040	-.361
100	510	-.162	.037	-.042	-.340
100	9124	-.521	.214	.147	-1.606
100	9140	-.643	.148	-.278	-1.373
100	9213	-.373	.098	-.132	-1.047
100	9218	-.380	.098	-.126	-1.025
100	9317	-.545	.204	.012	-1.604

WD	TAP	CPMEAN	CPRMS	CPMAX	CPMIN
100	9322	-.452	.107	-.176	-1.037
100	9348	-.297	.082	-.021	-.686
100	9355	-.714	.199	-.261	-1.882
110	101	-.439	.134	-.120	-1.457
110	102	-.414	.121	-.103	-1.380
110	103	-.555	.156	-.157	-1.392
110	104	-.443	.128	-.133	-1.149
110	105	-.443	.130	-.113	-1.407
110	106	-.486	.176	-.008	-1.467
110	107	-.542	.165	-.058	-1.263
110	108	-.447	.135	-.124	-1.196
110	109	-.460	.135	-.158	-1.308
110	110	-.438	.143	-.070	-1.100
110	111	-.539	.147	-.239	-1.477
110	112	-.460	.141	-.170	-1.334
110	113	-.482	.143	-.165	-1.204
110	114	-.454	.146	-.071	-1.281
110	115	-.521	.147	-.073	-1.430
110	116	-.452	.167	-.013	-1.541
110	117	-.447	.100	-.153	-1.026
110	118	-.427	.100	-.127	-.994
110	119	-.540	.116	-.185	-1.223
110	120	-.475	.131	-.028	-1.218
110	121	-.534	.185	.086	-1.464
110	122	-.523	.213	.062	-1.725
110	123	-.637	.189	-.102	-1.542
110	124	-.560	.200	-.035	-1.629
110	125	-.500	.098	-.215	-1.112
110	126	-.479	.098	-.223	-1.175
110	127	-.597	.116	-.289	-1.372
110	128	-.523	.131	-.099	-1.585
110	129	-.531	.146	-.070	-1.339
110	130	-.532	.182	-.006	-1.573
110	131	-.555	.137	-.085	-1.420
110	132	-.472	.123	-.055	-1.103
110	133	-.529	.132	-.061	-1.370
110	134	-.499	.134	-.033	-1.305
110	135	-.568	.130	-.080	-1.198
110	136	-.438	.111	.039	-1.172
110	137	-.465	.137	.069	-1.038
110	138	-.412	.118	-.021	-.974
110	139	-.495	.119	-.053	-.989
110	140	-.561	.113	-.298	-1.127
110	141	-.576	.120	-.312	-1.185
110	142	-.565	.128	-.228	-1.247
110	143	-.675	.155	-.217	-1.519
110	144	-.483	.134	-.092	-1.083
110	145	-.385	.126	-.028	-.894
110	146	-.321	.103	.035	-.764
110	147	-.409	.088	-.150	-.792

APPENDIX A -- PRESSURE DATA: CONFIGURATION A: 1221 BRICKELL BUILDING

WD	TAP	CPMEAN	CPRMS	CPMAX	CPMIN
110	148	-.740	.232	-.328	-1.993
110	149	-.756	.242	-.314	-2.053
110	150	-.619	.182	.122	-1.356
110	151	-.399	.141	-.035	-.959
110	152	-.272	.075	-.042	-.712
110	153	-.249	.054	-.082	-.527
110	154	-.230	.054	-.076	-.450
110	155	-.324	.066	-.145	-.595
110	156	-.684	.177	-.259	-1.484
110	157	-.651	.176	-.148	-1.635
110	158	-.402	.149	-.047	-.914
110	159	-.402	.083	-.222	-.944
110	160	-.383	.102	-.138	-1.044
110	161	-.309	.063	-.151	-.631
110	162	-.249	.048	-.076	-.508
110	163	-.310	.048	-.100	-.576
110	164	-.229	.048	.066	-.498
110	165	-.231	.044	-.004	-.444
110	166	-.175	.044	-.028	-.361
110	167	-.309	.087	-.063	-.772
110	168	-.347	.070	-.153	-.653
110	169	-.375	.076	-.193	-.712
110	170	-.656	.218	-.249	-2.054
110	171	-.763	.262	-.310	-2.853
110	172	-.397	.125	.090	-.865
110	173	-.388	.127	.161	-.875
110	174	-.388	.113	-.045	-1.102
110	201	-.353	.078	-.134	-.692
110	202	-.438	.078	-.232	-.782
110	203	-.347	.065	-.180	-.662
110	204	-.359	.068	-.182	-.868
110	205	-.338	.071	-.136	-.706
110	206	-.431	.077	-.210	-.837
110	207	-.391	.093	-.161	-.935
110	208	-.369	.080	-.152	-.930
110	209	-.355	.064	-.176	-.738
110	210	-.383	.069	-.206	-.875
110	211	-.352	.074	-.140	-.817
110	212	-.361	.074	-.123	-.693
110	213	-.385	.100	-.086	-.984
110	214	-.399	.087	-.156	-.947
110	215	-.357	.066	-.165	-.736
110	216	-.367	.077	-.176	-.901
110	217	-.365	.095	-.136	-1.235
110	218	-.396	.103	-.141	-1.207
110	219	-.397	.102	-.130	-.984
110	220	-.368	.080	-.063	-.744
110	221	-.347	.062	-.086	-.711
110	222	-.390	.082	-.154	-.892
110	223	-.373	.098	-.094	-.800
110	224	-.391	.114	-.075	-1.075
110	225	-.433	.103	-.109	-.927
110	226	-.425	.084	-.166	-.835
110	227	-.353	.062	-.155	-.656
110	228	-.359	.080	-.145	-.906
110	229	-.376	.100	-.083	-.957
110	230	-.419	.115	-.092	-1.031
110	231	-.407	.085	-.074	-.759
110	232	-.366	.067	-.147	-.833
110	233	-.358	.066	-.166	-.696
110	234	-.398	.088	-.156	-.865
110	235	-.379	.113	-.076	-1.037
110	236	-.432	.102	-.089	-1.007
110	237	-.406	.086	-.124	-.826
110	238	-.429	.088	-.211	-.947
110	239	-.404	.109	-.130	-1.169
110	240	-.414	.144	-.019	-1.474
110	241	-.465	.142	-.048	-1.183
110	242	-.523	.155	-.136	-1.366
110	243	-.478	.155	-.099	-1.126
110	244	-.464	.150	-.104	-1.109
110	245	-.447	.156	-.053	-1.559
110	246	-.417	.102	-.099	-.887
110	247	-.389	.101	-.084	-.850
110	248	-.382	.093	-.118	-.925
110	249	-.379	.108	-.116	-.984
110	250	-.400	.111	-.109	-.907
110	251	-.358	.104	-.074	-.843
110	252	-.339	.090	-.039	-.990
110	253	-.343	.094	-.028	-.907
110	254	-.293	.090	-.057	-.830
110	255	-.331	.094	-.089	-.848
110	256	-.330	.110	-.046	-1.246
110	257	-.323	.107	-.023	-1.132
110	258	-.298	.084	-.092	-.830
110	259	-.273	.083	-.084	-.774
110	260	-.276	.063	-.092	-.698
110	261	-.309	.094	-.031	-.841
110	262	-.350	.140	-.079	-1.691
110	263	-.309	.123	-.059	-1.465
110	264	-.228	.061	-.094	-.705
110	265	-.231	.064	-.086	-.769
110	266	-.263	.069	-.022	-.848
110	267	-.240	.108	.048	-1.050
110	268	-.325	.171	.024	-1.365
110	269	-.349	.185	.097	-1.506
110	270	-.361	.104	-.073	-.915
110	271	-.327	.084	-.087	-.904
110	272	-.316	.102	-.027	-.895
110	273	-.408	.121	-.079	-1.019
110	274	-.364	.100	-.073	-.892
110	275	-.320	.077	-.058	-.634
110	276	-.287	.069	-.035	-.533
110	277	-.365	.091	-.066	-1.016
110	278	-.313	.095	.025	-.932
110	279	-.335	.111	.029	-.868
110	280	-.311	.068	-.092	-.613
110	281	-.378	.088	-.112	-.790
110	282	-.367	.094	-.073	-.910
110	283	-.360	.080	-.046	-.902
110	284	-.345	.109	-.050	-.977
110	285	-.426	.125	-.005	-1.196
110	301	-.423	.096	-.141	-.892
110	302	-.415	.094	-.147	-.921
110	303	-.407	.104	-.058	-.925
110	304	-.449	.119	-.091	-.957
110	305	-.579	.129	-.101	-1.006
110	306	-.359	.163	-.038	-1.156
110	307	-.811	.257	.031	-1.669
110	308	-.615	.224	-.043	-1.532
110	309	-.774	.275	-.094	-2.189
110	310	-.703	.232	-.094	-1.644
110	311	-.338	.094	-.077	-.952
110	312	-.331	.100	-.066	-.849
110	313	-.429	.160	-.042	-1.393
110	314	-.685	.214	.042	-1.467
110	315	-.735	.233	-.114	-1.878
110	316	-.695	.233	-.146	-1.659
110	317	-.538	.216	-.040	-1.617
110	318	-.448	.178	.075	-1.376
110	319	-.520	.176	.000	-1.162
110	320	-.582	.157	-.022	-1.455
110	321	-.657	.147	-.262	-1.285
110	322	-.552	.136	-.186	-1.096
110	323	-.455	.198	.097	-1.562
110	324	-.427	.175	.091	-1.345
110	325	-.511	.188	-.005	-1.768
110	326	-.429	.167	.054	-1.060
110	327	-.510	.186	-.019	-1.267
110	328	-.591	.168	-.098	-1.282
110	329	-.682	.172	-.228	-1.629
110	330	-.578	.156	-.170	-1.426
110	331	-.398	.138	.027	-1.087
110	332	-.382	.133	.001	-.920
110	333	-.470	.164	.030	-1.169
110	334	-.421	.180	.114	-1.106
110	335	-.447	.182	-.006	-1.190
110	336	-.370	.121	.005	-1.232
110	337	-.451	.121	-.074	-1.183
110	338	-.328	.129	-.007	-1.032

APPENDIX A -- PRESSURE DATA: CONFIGURATION A: 1221 BRICKELL BUILDING

WD	TAP	CPMEAN	CPRMS	CPMAX	CPMIN
110	339	-.357	.107	-.052	-.873
110	340	-.268	.075	-.026	-.615
110	341	-.340	.083	-.093	-.810
110	342	-.259	.103	-.014	-.875
110	343	-.331	.148	.132	-1.070
110	344	-.467	.209	.127	-1.182
110	345	-.724	.204	-.028	-1.645
110	346	-.627	.160	-.254	-1.678
110	347	-.625	.154	-.221	-1.405
110	348	-.246	.074	-.010	-.695
110	349	-.307	.057	-.072	-.636
110	350	-.204	.044	-.032	-.369
110	351	-.202	.048	-.070	-.402
110	352	-.157	.082	.073	-.629
110	353	-.514	.291	.190	-1.510
110	354	-.801	.281	-.170	-2.366
110	355	-.788	.245	-.203	-1.985
110	356	-.441	.219	.164	-1.555
110	357	-.741	.205	-.119	-1.652
110	358	-.196	.091	.048	-.929
110	359	-.242	.064	-.037	-.573
110	360	-.250	.083	.024	-.661
110	361	-.314	.067	-.079	-.620
110	362	-.215	.047	-.014	-.419
110	363	-.176	.049	.003	-.365
110	364	-.233	.054	.005	-.433
110	365	-.343	.116	-.079	-1.035
110	366	-.130	.046	.018	-.312
110	367	-.262	.092	-.011	-.645
110	368	-.266	.081	-.006	-.593
110	369	-.235	.086	.048	-.620
110	370	-.796	.310	-.028	-2.253
110	371	-.775	.291	-.102	-2.858
110	372	-.311	.096	-.029	-.741
110	373	-.301	.112	.071	-.903
110	374	-.286	.109	.052	-.935
110	401	-.112	.050	.133	-.300
110	402	-.150	.045	.062	-.361
110	403	-.145	.043	.051	-.333
110	404	-.236	.046	-.047	-.415
110	405	-.144	.050	.050	-.322
110	406	-.125	.059	.175	-.343
110	407	-.145	.052	.053	-.332
110	408	-.139	.061	.060	-.346
110	409	-.029	.058	.187	-.243
110	410	-.045	.060	.167	-.269
110	411	-.046	.058	.177	-.234
110	412	-.216	.058	-.000	-.409
110	413	-.045	.069	.206	-.277
110	414	.028	.071	.302	-.190
110	415	.043	.068	.281	-.166
110	416	-.059	.069	.174	-.286
110	417	-.109	.062	.132	-.325
110	418	-.346	.223	.305	-1.230
110	419	-.353	.163	.392	-1.026
110	420	-.437	.161	.448	-.937
110	421	-.367	.146	.421	-.799
110	422	-.402	.141	.180	-1.240
110	423	.150	.134	.615	-.330
110	424	.272	.143	.890	-.164
110	425	.309	.146	.819	-.177
110	426	.301	.140	.803	-.193
110	427	.210	.127	.622	-.192
110	428	.117	.121	.556	-.349
110	429	.152	.137	.660	-.294
110	430	.341	.145	.864	-.087
110	431	.458	.157	.936	-.051
110	432	.420	.151	.873	-.022
110	433	.295	.137	.714	-.110
110	434	.099	.122	.481	-.265
110	435	.126	.115	.526	-.265
110	436	.303	.134	.775	-.054
110	437	.462	.148	.954	.118
110	438	.411	.147	.918	.075
110	439	.247	.123	.717	-.056
110	440	.092	.103	.442	-.265
110	441	.105	.117	.653	-.312
110	442	.274	.132	.824	-.157
110	443	.446	.137	.951	.064
110	444	.398	.133	.873	.016
110	445	.226	.112	.616	-.098
110	446	.018	.096	.392	-.277
110	447	.051	.115	.545	-.299
110	448	.202	.113	.697	-.111
110	449	.337	.125	.830	.014
110	450	.284	.126	.744	-.033
110	451	.142	.106	.580	-.134
110	452	-.029	.076	.252	-.251
110	453	-.145	.061	.035	-.400
110	454	-.089	.039	.068	-.248
110	455	-.016	.038	.158	-.157
110	456	-.021	.040	.131	-.136
110	457	-.046	.046	.133	-.232
110	458	-.200	.062	-.002	-.569
110	459	-.038	.047	.203	-.232
110	460	-.119	.044	.078	-.269
110	461	-.141	.038	-.000	-.321
110	462	-.139	.037	.009	-.295
110	463	-.100	.047	.109	-.328
110	464	-.092	.052	.118	-.301
110	465	-.120	.068	.100	-.401
110	466	-.311	.068	-.069	-.612
110	467	-.152	.066	.041	-.423
110	468	.089	.093	.528	-.139
110	469	.130	.101	.562	-.087
110	470	.130	.106	.716	-.098
110	471	.074	.110	.568	-.224
110	472	-.315	.068	-.140	-.655
110	501	-.327	.102	.096	-.902
110	502	-.336	.063	-.166	-.648
110	503	-.417	.079	-.195	-.748
110	504	-.162	.055	.052	-.458
110	505	-.211	.053	-.000	-.474
110	506	-.209	.065	-.042	-.524
110	507	-.294	.056	-.089	-.565
110	508	-.287	.073	-.095	-.623
110	509	-.162	.041	-.010	-.399
110	510	-.159	.040	-.018	-.339
110	9124	-.587	.201	.051	-1.762
110	9140	-.603	.131	-.301	-1.217
110	9213	-.389	.105	-.122	-.980
110	9218	-.362	.102	-.144	-1.204
110	9317	-.507	.206	.143	-1.690
110	9322	-.590	.144	-.193	-1.217
110	9348	-.276	.077	-.022	-.666
110	9355	-.770	.244	-.181	-1.989
120	101	-.376	.097	-.090	-.975
120	102	-.343	.084	-.058	-.960
120	103	-.433	.089	-.169	-.900
120	104	-.364	.087	-.076	-.957
120	105	-.395	.115	-.146	-1.248
120	106	-.358	.101	-.106	-1.010
120	107	-.450	.116	-.093	-1.193
120	108	-.358	.082	-.139	-1.054
120	109	-.356	.066	-.186	-.654
120	110	-.323	.082	-.080	-1.016
120	111	-.418	.068	-.250	-.707
120	112	-.347	.064	-.180	-.642
120	113	-.373	.082	-.148	-1.329
120	114	-.362	.090	-.123	-1.384
120	115	-.467	.111	-.196	-1.266
120	116	-.402	.124	-.127	-1.182
120	117	-.369	.065	-.193	-.642
120	118	-.348	.064	-.163	-.625
120	119	-.444	.071	-.262	-.734
120	120	-.392	.081	-.148	-.872
120	121	-.437	.128	-.144	-1.315
120	122	-.425	.142	-.106	-1.412
120	123	-.544	.137	-.259	-1.386
120	124	-.466	.136	-.189	-1.260

APPENDIX A -- PRESSURE DATA: CONFIGURATION A: 1221 BRICKELL BUILDING

WD	TAP	CPMEAN	CPRMS	CPMAX	CPMIN
120	125	-.409	.068	-.230	-.693
120	126	-.389	.067	-.208	-.667
120	127	-.488	.076	-.289	-.785
120	128	-.436	.091	-.202	-.988
120	129	-.473	.105	-.181	-1.105
120	130	-.467	.129	-.120	-1.284
120	131	-.530	.105	-.245	-1.218
120	132	-.449	.095	-.180	-1.003
120	133	-.470	.097	-.232	-1.026
120	134	-.447	.098	-.201	-.886
120	135	-.537	.101	-.242	-1.032
120	136	-.451	.099	-.153	-1.127
120	137	-.451	.095	.078	-1.152
120	138	-.405	.096	-.070	-1.205
120	139	-.499	.100	-.189	-1.186
120	140	-.442	.085	-.194	-.952
120	141	-.467	.089	-.225	-.861
120	142	-.454	.091	-.211	-.846
120	143	-.564	.106	-.296	-1.046
120	144	-.469	.098	-.124	-.972
120	145	-.454	.091	-.051	-.922
120	146	-.408	.093	-.001	-.884
120	147	-.502	.098	-.184	-1.159
120	148	-.480	.123	-.214	-1.838
120	149	-.506	.124	-.242	-1.350
120	150	-.489	.125	-.237	-1.070
120	151	-.535	.099	-.206	-.878
120	152	-.402	.081	-.066	-.712
120	153	-.361	.077	-.132	-.658
120	154	-.314	.071	-.094	-.646
120	155	-.398	.075	-.167	-.841
120	156	-.463	.128	-.197	-1.436
120	157	-.488	.128	-.225	-1.208
120	158	-.480	.117	-.094	-1.246
120	159	-.530	.109	-.274	-1.010
120	160	-.386	.088	-.158	-.947
120	161	-.419	.076	-.162	-.698
120	162	-.330	.058	-.158	-.544
120	163	-.366	.059	-.176	-.616
120	164	-.283	.061	-.119	-.550
120	165	-.297	.075	-.081	-.642
120	166	-.235	.056	-.044	-.503
120	167	-.402	.106	-.088	-.932
120	168	-.459	.091	-.189	-.916
120	169	-.506	.095	-.221	-.942
120	170	-.445	.118	-.202	-1.300
120	171	-.515	.128	-.254	-1.471
120	172	-.430	.090	-.060	-.992
120	173	-.429	.092	-.119	-1.029
120	174	-.455	.106	-.111	-1.145

WD	TAP	CPMEAN	CPRMS	CPMAX	CPMIN
120	201	-.315	.061	-.127	-.805
120	202	-.392	.059	-.213	-.890
120	203	-.313	.051	-.163	-.618
120	204	-.328	.055	-.181	-.619
120	205	-.302	.057	-.149	-.556
120	206	-.386	.061	-.208	-.660
120	207	-.340	.067	-.153	-.838
120	208	-.334	.058	-.156	-.655
120	209	-.327	.051	-.173	-.591
120	210	-.355	.054	-.207	-.647
120	211	-.319	.055	-.147	-.603
120	212	-.325	.058	-.142	-.573
120	213	-.354	.069	-.161	-.733
120	214	-.375	.061	-.168	-.662
120	215	-.339	.052	-.190	-.545
120	216	-.336	.054	-.173	-.645
120	217	-.327	.056	-.133	-.668
120	218	-.354	.058	-.151	-.709
120	219	-.356	.072	-.119	-.726
120	220	-.342	.064	-.156	-.720
120	221	-.334	.058	-.158	-.738
120	222	-.369	.067	-.153	-.842
120	223	-.332	.067	-.086	-.754
120	224	-.335	.069	-.128	-.773
120	225	-.401	.083	-.108	-.728
120	226	-.403	.069	-.153	-.667
120	227	-.345	.057	-.177	-.575
120	228	-.352	.064	-.152	-.609
120	229	-.351	.072	-.101	-.678
120	230	-.383	.076	-.109	-.743
120	231	-.392	.067	-.061	-.666
120	232	-.359	.056	-.166	-.619
120	233	-.355	.060	-.181	-.648
120	234	-.387	.070	-.170	-.746
120	235	-.356	.080	-.086	-.744
120	236	-.409	.075	-.209	-.792
120	237	-.391	.067	-.198	-.668
120	238	-.420	.075	-.227	-.894
120	239	-.386	.087	-.119	-.999
120	240	-.376	.094	-.072	-1.093
120	241	-.417	.096	-.131	-1.023
120	242	-.460	.108	-.141	-1.040
120	243	-.428	.105	-.162	-.984
120	244	-.429	.121	-.147	-1.071
120	245	-.419	.133	-.103	-1.196
120	246	-.420	.086	-.143	-.936
120	247	-.378	.084	-.086	-.913
120	248	-.368	.077	-.142	-.686
120	249	-.359	.077	-.146	-.758
120	250	-.382	.081	-.123	-.788

WD	TAP	CPMEAN	CPRMS	CPMAX	CPMIN
120	251	-.342	.077	-.109	-.669
120	252	-.385	.079	-.077	-.797
120	253	-.374	.079	-.071	-.731
120	254	-.300	.079	-.050	-.672
120	255	-.330	.072	-.099	-.716
120	256	-.314	.069	-.111	-.763
120	257	-.309	.069	-.053	-.773
120	258	-.357	.087	-.113	-1.114
120	259	-.330	.086	-.094	-.888
120	260	-.342	.085	-.094	-.777
120	261	-.320	.087	-.098	-.836
120	262	-.332	.082	-.089	-.966
120	263	-.292	.071	-.091	-.742
120	264	-.313	.108	-.063	-.968
120	265	-.320	.117	-.051	-.986
120	266	-.315	.101	.062	-.983
120	267	-.326	.131	.042	-.979
120	268	-.341	.156	-.036	-1.362
120	269	-.324	.142	-.023	-1.198
120	270	-.324	.072	-.081	-.677
120	271	-.302	.062	-.082	-.586
120	272	-.290	.066	-.012	-.545
120	273	-.353	.072	-.113	-.695
120	274	-.329	.073	-.066	-.708
120	275	-.309	.069	-.053	-.574
120	276	-.287	.065	.015	-.505
120	277	-.356	.071	.020	-.773
120	278	-.301	.070	.025	-.683
120	279	-.308	.074	.024	-.683
120	280	-.306	.059	-.114	-.610
120	281	-.363	.069	-.111	-.710
120	282	-.356	.071	-.109	-.882
120	283	-.342	.064	-.160	-.688
120	284	-.322	.089	-.045	-1.312
120	285	-.386	.096	.000	-1.254
120	301	-.364	.072	-.118	-.692
120	302	-.350	.083	-.028	-.845
120	303	-.300	.084	-.106	-.724
120	304	-.314	.120	-.038	-.743
120	305	-.412	.130	.106	-.827
120	306	-.152	.059	.020	-.721
120	307	-.462	.254	.176	-1.341
120	308	-.185	.148	.128	-1.247
120	309	-.709	.389	.257	-2.006
120	310	-.831	.291	.062	-2.398
120	311	-.268	.042	-.125	-.496
120	312	-.229	.039	-.103	-.451
120	313	-.191	.052	-.044	-.645
120	314	-.272	.243	.206	-1.221
120	315	-.794	.270	.119	-1.965

APPENDIX A -- PRESSURE DATA: CONFIGURATION A; 1221 BRICKELL BUILDING

WD	TAP	CPMEAN	CPRMS	CPMAX	CPMIN
120	316	-.763	.262	-.033	-1.895
120	317	-.362	.099	-.044	-1.007
120	318	-.288	.108	.066	-.811
120	319	-.339	.177	.068	-1.072
120	320	-.528	.188	.125	-1.457
120	321	-.634	.138	-.149	-1.348
120	322	-.544	.125	-.123	-1.121
120	323	-.303	.086	-.024	-.954
120	324	-.273	.103	.060	-.871
120	325	-.343	.091	-.085	-1.115
120	326	-.268	.103	-.007	-.932
120	327	-.338	.186	.027	-1.096
120	328	-.531	.192	.109	-1.500
120	329	-.658	.164	-.140	-1.405
120	330	-.569	.149	-.105	-1.230
120	331	-.307	.083	-.087	-.706
120	332	-.294	.081	.019	-.732
120	333	-.331	.097	-.035	-.987
120	334	-.254	.109	-.003	-.943
120	335	-.253	.118	.007	-.933
120	336	-.306	.072	-.026	-.716
120	337	-.401	.083	-.156	-.872
120	338	-.246	.060	-.032	-.615
120	339	-.341	.086	-.043	-.706
120	340	-.269	.059	-.046	-.567
120	341	-.319	.057	-.096	-.662
120	342	-.217	.057	.004	-.563
120	343	-.217	.093	.027	-.902
120	344	-.262	.180	.064	-1.110
120	345	-.574	.231	.167	-1.492
120	346	-.571	.163	-.014	-1.470
120	347	-.550	.159	-.130	-1.367
120	348	-.243	.059	-.055	-.567
120	349	-.290	.049	-.131	-.490
120	350	-.186	.038	-.025	-.338
120	351	-.155	.038	-.019	-.329
120	352	-.097	.048	.066	-.328
120	353	-.318	.203	.233	-1.259
120	354	-.563	.241	.143	-1.850
120	355	-.572	.234	.061	-1.781
120	356	-.289	.245	.208	-1.340
120	357	-.616	.261	-.012	-1.733
120	358	-.097	.059	.107	-.634
120	359	-.156	.051	-.006	-.331
120	360	-.251	.077	-.019	-.723
120	361	-.296	.060	-.089	-.650
120	362	-.187	.041	-.041	-.383
120	363	-.124	.042	.078	-.253
120	364	-.187	.047	-.010	-.371
120	365	-.196	.075	-.003	-.767
120	366	-.074	.042	.095	-.297
120	367	-.124	.060	.112	-.453
120	368	-.145	.065	.120	-.393
120	369	-.127	.083	.135	-.490
120	370	-.554	.276	.056	-1.838
120	371	-.524	.234	.142	-1.727
120	372	-.291	.062	-.064	-.615
120	373	-.262	.059	-.048	-.555
120	374	-.253	.058	-.030	-.567
120	401	-.063	.053	.132	-.261
120	402	-.123	.047	.042	-.287
120	403	-.135	.042	.026	-.272
120	404	-.225	.043	-.051	-.373
120	405	-.156	.044	.005	-.396
120	406	-.051	.065	.207	-.242
120	407	-.162	.047	.018	-.384
120	408	-.061	.072	.279	-.307
120	409	-.008	.063	.309	-.215
120	410	-.039	.060	.147	-.272
120	411	-.059	.053	.141	-.301
120	412	-.230	.050	-.071	-.428
120	413	.052	.080	.314	-.246
120	414	.062	.078	.288	-.205
120	415	.050	.072	.274	-.206
120	416	-.060	.069	.165	-.360
120	417	-.121	.054	.061	-.417
120	418	-.172	.249	.410	-.978
120	419	-.300	.162	.346	-.901
120	420	-.381	.140	.313	-.819
120	421	-.329	.117	.257	-.770
120	422	-.346	.102	.133	-.782
120	423	.254	.147	.785	-.233
120	424	.362	.151	.869	-.062
120	425	.318	.150	.777	-.089
120	426	.261	.134	.628	-.170
120	427	.154	.110	.535	-.200
120	428	.068	.095	.392	-.231
120	429	.273	.146	.782	-.246
120	430	.404	.152	.879	-.071
120	431	.486	.152	.978	.079
120	432	.386	.140	.837	-.039
120	433	.236	.117	.621	-.129
120	434	.042	.097	.393	-.258
120	435	.225	.124	.784	-.107
120	436	.383	.138	.821	.004
120	437	.484	.147	.924	.075
120	438	.371	.138	.819	.019
120	439	.190	.106	.548	-.124
120	440	.036	.080	.337	-.226
120	441	.173	.111	.569	-.190
120	442	.295	.122	.725	-.054
120	443	.408	.122	.906	.110
120	444	.346	.115	.764	-.003
120	445	.160	.091	.508	-.089
120	446	-.039	.077	.318	-.298
120	447	.152	.115	.653	-.248
120	448	.265	.113	.759	-.048
120	449	.350	.117	.901	.051
120	450	.244	.108	.838	-.033
120	451	.096	.087	.479	-.217
120	452	-.063	.064	.175	-.309
120	453	-.054	.059	.179	-.290
120	454	-.056	.040	.107	-.215
120	455	-.003	.036	.163	-.131
120	456	-.030	.039	.134	-.158
120	457	-.060	.041	.084	-.233
120	458	-.198	.051	-.047	-.475
120	459	.017	.041	.234	-.109
120	460	-.111	.053	.156	-.272
120	461	-.164	.049	-.030	-.377
120	462	-.159	.042	-.013	-.342
120	463	-.065	.036	.086	-.215
120	464	-.121	.079	.173	-.411
120	465	-.032	.051	.212	-.251
120	466	-.379	.090	-.086	-.763
120	467	-.061	.050	.154	-.233
120	468	.082	.081	.488	-.102
120	469	.144	.103	.625	-.094
120	470	.118	.109	.678	-.115
120	471	.080	.124	.554	-.438
120	472	-.413	.081	-.152	-.767
120	501	-.302	.067	-.027	-.618
120	502	-.318	.054	-.152	-.571
120	503	-.400	.061	-.165	-.667
120	504	-.080	.050	.079	-.274
120	505	-.247	.063	-.028	-.555
120	506	-.159	.044	-.006	-.418
120	507	-.276	.051	-.137	-.558
120	508	-.354	.070	-.117	-.599
120	509	-.128	.039	.073	-.327
120	510	-.146	.039	.001	-.285
120	9124	-.519	.132	-.187	-1.418
120	9140	-.465	.089	-.229	-.924
120	9213	-.332	.067	-.133	-.671
120	9218	-.302	.053	-.105	-.640
120	9317	-.340	.088	.022	-.939
120	9322	-.543	.121	-.112	-1.132
120	9348	-.260	.060	.043	-.592
120	9355	-.568	.211	.167	-1.490
130	101	-.320	.076	-.100	-.780

APPENDIX A -- PRESSURE DATA: CONFIGURATION A; 1221 BRICKELL BUILDING

WD	TAP	CPMEAN	CPRMS	CPMAX	CPMIN
130	102	-.289	.064	-.089	-.637
130	103	-.371	.066	-.145	-.644
130	104	-.312	.067	-.122	-.665
130	105	-.337	.079	-.132	-.939
130	106	-.298	.064	-.094	-.645
130	107	-.385	.069	-.159	-.719
130	108	-.304	.055	-.119	-.573
130	109	-.306	.053	-.123	-.505
130	110	-.272	.057	-.070	-.621
130	111	-.368	.054	-.179	-.570
130	112	-.301	.052	-.132	-.495
130	113	-.325	.056	-.170	-.785
130	114	-.315	.060	-.156	-.726
130	115	-.412	.077	-.235	-1.196
130	116	-.347	.084	-.151	-1.146
130	117	-.329	.051	-.158	-.601
130	118	-.309	.050	-.144	-.580
130	119	-.399	.053	-.243	-.688
130	120	-.348	.057	-.178	-.675
130	121	-.382	.081	-.177	-.918
130	122	-.371	.092	-.149	-.997
130	123	-.492	.096	-.238	-1.037
130	124	-.419	.093	-.156	-.951
130	125	-.375	.057	-.130	-.650
130	126	-.356	.056	-.130	-.625
130	127	-.450	.060	-.225	-.771
130	128	-.401	.066	-.185	-.794
130	129	-.438	.082	-.219	-1.086
130	130	-.425	.089	-.192	-1.047
130	131	-.520	.096	-.272	-1.081
130	132	-.436	.085	-.207	-.990
130	133	-.432	.077	-.226	-.962
130	134	-.412	.078	-.213	-.930
130	135	-.511	.088	-.309	-.976
130	136	-.450	.091	-.217	-.954
130	137	-.458	.081	-.179	-.911
130	138	-.442	.095	-.209	-1.059
130	139	-.539	.103	-.277	-1.160
130	140	-.405	.065	-.221	-.685
130	141	-.425	.069	-.240	-.750
130	142	-.410	.070	-.216	-.735
130	143	-.517	.083	-.306	-1.133
130	144	-.451	.086	-.258	-1.143
130	145	-.456	.074	-.233	-.862
130	146	-.439	.084	-.230	-.930
130	147	-.536	.088	-.299	-1.023
130	148	-.402	.064	-.231	-.643
130	149	-.418	.068	-.251	-.694
130	150	-.398	.069	-.244	-.699
130	151	-.498	.075	-.328	-.817

WD	TAP	CPMEAN	CPRMS	CPMAX	CPMIN
130	152	-.426	.072	-.253	-.784
130	153	-.419	.075	-.191	-.771
130	154	-.379	.076	-.144	-.697
130	155	-.464	.085	-.213	-.937
130	156	-.386	.070	-.204	-.847
130	157	-.404	.070	-.242	-.990
130	158	-.388	.083	-.180	-.766
130	159	-.504	.084	-.309	-.976
130	160	-.360	.073	-.146	-.782
130	161	-.470	.079	-.256	-.913
130	162	-.386	.067	-.209	-.697
130	163	-.445	.072	-.196	-.751
130	164	-.358	.074	-.117	-.617
130	165	-.381	.090	-.116	-.790
130	166	-.265	.058	-.094	-.528
130	167	-.423	.095	-.169	-.839
130	168	-.513	.090	-.270	-.905
130	169	-.545	.097	-.307	-.972
130	170	-.357	.069	-.175	-.652
130	171	-.410	.071	-.225	-.716
130	172	-.456	.081	-.200	-.797
130	173	-.454	.082	-.187	-.787
130	174	-.495	.099	-.139	-1.084
130	201	-.282	.058	-.106	-.604
130	202	-.361	.058	-.186	-.656
130	203	-.289	.051	-.141	-.537
130	204	-.299	.052	-.160	-.524
130	205	-.272	.052	-.116	-.499
130	206	-.351	.056	-.181	-.585
130	207	-.306	.057	-.132	-.576
130	208	-.314	.053	-.157	-.570
130	209	-.310	.049	-.156	-.522
130	210	-.337	.052	-.169	-.581
130	211	-.300	.051	-.127	-.519
130	212	-.294	.049	-.113	-.524
130	213	-.325	.060	-.136	-.610
130	214	-.351	.055	-.181	-.581
130	215	-.318	.047	-.180	-.567
130	216	-.322	.049	-.171	-.521
130	217	-.314	.050	-.164	-.502
130	218	-.343	.052	-.176	-.553
130	219	-.343	.066	-.071	-.709
130	220	-.332	.060	-.104	-.625
130	221	-.330	.055	-.123	-.542
130	222	-.360	.052	-.186	-.600
130	223	-.320	.050	-.160	-.572
130	224	-.326	.050	-.159	-.502
130	225	-.394	.071	-.136	-.715
130	226	-.402	.061	-.174	-.630
130	227	-.348	.052	-.188	-.519

WD	TAP	CPMEAN	CPRMS	CPMAX	CPMIN
130	228	-.342	.058	-.183	-.657
130	229	-.341	.058	-.164	-.630
130	230	-.371	.060	-.183	-.640
130	231	-.382	.064	-.160	-.752
130	232	-.355	.050	-.200	-.620
130	233	-.350	.051	-.226	-.723
130	234	-.380	.055	-.253	-.864
130	235	-.347	.056	-.185	-.640
130	236	-.400	.065	-.150	-.715
130	237	-.381	.059	-.189	-.652
130	238	-.407	.062	-.236	-.732
130	239	-.366	.064	-.205	-.726
130	240	-.361	.066	-.169	-.847
130	241	-.427	.084	-.194	-.983
130	242	-.459	.090	-.236	-1.035
130	243	-.418	.089	-.231	-.916
130	244	-.415	.104	-.164	-1.009
130	245	-.406	.120	-.136	-1.445
130	246	-.430	.087	-.141	-.754
130	247	-.384	.082	-.071	-.676
130	248	-.368	.071	-.089	-.695
130	249	-.360	.070	-.151	-.645
130	250	-.381	.072	-.166	-.722
130	251	-.340	.069	-.127	-.671
130	252	-.404	.085	-.080	-.958
130	253	-.387	.085	.007	-.798
130	254	-.308	.075	-.074	-.704
130	255	-.342	.069	-.049	-.656
130	256	-.336	.068	-.101	-.707
130	257	-.332	.069	-.071	-.622
130	258	-.434	.086	-.099	-1.035
130	259	-.400	.086	-.092	-.959
130	260	-.389	.088	-.055	-.775
130	261	-.341	.087	-.136	-1.124
130	262	-.351	.079	-.161	-.869
130	263	-.311	.070	-.127	-.731
130	264	-.396	.130	-.051	-1.292
130	265	-.398	.133	.024	-1.081
130	266	-.374	.112	.008	-1.025
130	267	-.344	.130	-.081	-1.245
130	268	-.328	.117	-.121	-1.572
130	269	-.313	.108	-.091	-1.099
130	270	-.310	.066	-.057	-.658
130	271	-.297	.062	-.058	-.514
130	272	-.284	.053	-.089	-.630
130	273	-.332	.054	-.116	-.575
130	274	-.320	.070	-.075	-.560
130	275	-.298	.066	-.000	-.540
130	276	-.281	.062	.010	-.511
130	277	-.333	.058	-.144	-.696

APPENDIX A -- PRESSURE DATA: CONFIGURATION A: 1221 BRICKELL BUILDING

WD	TAP	CPMEAN	CPRMS	CPMAX	CPMIN
130	278	-.285	.056	-.125	-.548
130	279	-.289	.054	-.115	-.507
130	280	-.300	.055	-.096	-.568
130	281	-.340	.056	-.154	-.632
130	282	-.342	.060	-.160	-.605
130	283	-.332	.059	-.151	-.640
130	284	-.305	.060	-.133	-.632
130	285	-.358	.065	-.161	-.771
130	301	-.247	.092	.037	-.533
130	302	-.165	.115	.169	-.549
130	303	-.193	.041	-.041	-.439
130	304	-.124	.050	.065	-.502
130	305	-.102	.133	.251	-.576
130	306	-.036	.054	.161	-.208
130	307	-.009	.171	.447	-.799
130	308	.048	.081	.317	-.307
130	309	-.064	.251	.497	-1.385
130	310	-.393	.323	.548	-1.758
130	311	-.227	.036	-.082	-.403
130	312	-.167	.035	-.041	-.312
130	313	-.089	.047	.112	-.295
130	314	.036	.116	.298	-.729
130	315	-.358	.289	.533	-1.535
130	316	-.349	.215	.471	-1.216
130	317	-.286	.041	-.138	-.533
130	318	-.184	.040	-.069	-.511
130	319	-.106	.071	.096	-.610
130	320	-.181	.230	.296	-1.050
130	321	-.426	.182	.453	-1.049
130	322	-.365	.150	.449	-.861
130	323	-.253	.041	-.119	-.479
130	324	-.189	.044	-.024	-.514
130	325	-.272	.042	-.114	-.594
130	326	-.179	.045	-.012	-.568
130	327	-.109	.076	.115	-.733
130	328	-.175	.198	.282	-.913
130	329	-.426	.185	.405	-1.154
130	330	-.368	.154	.345	-1.095
130	331	-.254	.045	-.060	-.482
130	332	-.244	.048	-.040	-.490
130	333	-.245	.048	-.025	-.587
130	334	-.156	.040	.038	-.555
130	335	-.145	.054	.013	-.662
130	336	-.286	.051	-.123	-.501
130	337	-.369	.066	-.186	-.759
130	338	-.210	.040	-.028	-.432
130	339	-.330	.065	-.162	-.618
130	340	-.270	.052	-.094	-.485
130	341	-.295	.045	-.118	-.474
130	342	-.179	.038	-.032	-.362
130	343	-.124	.044	.013	-.406
130	344	-.074	.078	.134	-.748
130	345	-.228	.203	.240	-1.129
130	346	-.344	.161	.445	-1.304
130	347	-.348	.151	.298	-1.135
130	348	-.246	.058	-.035	-.463
130	349	-.266	.048	-.095	-.449
130	350	-.150	.038	.002	-.296
130	351	-.095	.040	.055	-.245
130	352	-.038	.049	.145	-.249
130	353	-.146	.142	.208	-.832
130	354	-.260	.178	.261	-1.059
130	355	-.310	.160	.370	-1.322
130	356	-.133	.148	.309	-1.003
130	357	-.325	.192	.249	-1.398
130	358	-.032	.040	.224	-.293
130	359	-.055	.058	.183	-.262
130	360	-.236	.064	-.044	-.566
130	361	-.258	.051	-.098	-.478
130	362	-.135	.039	.009	-.268
130	363	-.053	.045	.123	-.268
130	364	-.101	.056	.167	-.265
130	365	-.086	.041	.084	-.356
130	366	-.019	.042	.190	-.171
130	367	-.033	.055	.224	-.245
130	368	-.029	.071	.316	-.271
130	369	-.038	.054	.254	-.299
130	370	-.255	.192	.280	-1.243
130	371	-.271	.169	.198	-1.345
130	372	-.292	.050	-.148	-.513
130	373	-.246	.041	-.080	-.414
130	374	-.238	.041	-.045	-.387
130	401	-.024	.057	.160	-.199
130	402	-.106	.049	.089	-.256
130	403	-.127	.043	.055	-.265
130	404	-.211	.042	-.039	-.349
130	405	-.149	.040	-.010	-.309
130	406	.012	.072	.235	-.203
130	407	-.157	.042	-.020	-.318
130	408	.003	.081	.247	-.365
130	409	.007	.063	.206	-.212
130	410	-.035	.056	.148	-.225
130	411	-.065	.048	.095	-.242
130	412	-.229	.043	-.073	-.385
130	413	.131	.090	.431	-.246
130	414	.079	.079	.339	-.130
130	415	.048	.069	.262	-.139
130	416	-.062	.061	.129	-.279
130	417	-.134	.046	.036	-.318
130	418	.102	.205	.589	-.970
130	419	-.207	.173	.525	-1.068
130	420	-.295	.141	.410	-.818
130	421	-.265	.115	.370	-.827
130	422	-.301	.079	.053	-.690
130	423	.388	.158	.854	-.073
130	424	.403	.156	.888	-.060
130	425	.319	.137	.728	-.117
130	426	.223	.116	.593	-.163
130	427	.100	.094	.424	-.188
130	428	.016	.079	.338	-.264
130	429	.385	.162	.817	-.107
130	430	.486	.151	.967	.065
130	431	.445	.148	.892	.032
130	432	.339	.123	.755	-.053
130	433	.171	.096	.522	-.160
130	434	-.025	.076	.266	-.352
130	435	.366	.139	.830	-.112
130	436	.431	.144	.917	.016
130	437	.459	.139	.901	.056
130	438	.292	.121	.676	-.043
130	439	.114	.085	.427	-.098
130	440	-.013	.064	.302	-.209
130	441	.298	.133	.830	-.077
130	442	.365	.144	.925	-.009
130	443	.417	.133	.887	.087
130	444	.276	.108	.634	.009
130	445	.091	.082	.376	-.117
130	446	-.101	.067	.120	-.304
130	447	.223	.109	.662	-.148
130	448	.318	.119	.780	.018
130	449	.344	.115	.868	.042
130	450	.195	.102	.659	-.067
130	451	.044	.078	.384	-.206
130	452	-.105	.052	.077	-.344
130	453	.024	.054	.262	-.176
130	454	-.028	.044	.158	-.172
130	455	-.007	.034	.123	-.141
130	456	-.039	.041	.121	-.188
130	457	-.073	.040	.070	-.247
130	458	-.216	.045	-.059	-.421
130	459	.036	.036	.215	-.070
130	460	-.129	.050	.077	-.287
130	461	-.177	.060	.114	-.449
130	462	-.161	.045	.013	-.335
130	463	-.041	.041	.170	-.241
130	464	-.170	.094	.223	-.484
130	465	.039	.065	.331	-.163
130	466	-.359	.087	-.062	-.679
130	467	.030	.076	.465	-.155
130	468	.056	.066	.372	-.105

APPENDIX A -- PRESSURE DATA: CONFIGURATION A: 1221 BRICKELL BUILDING

WD	TAP	CPMEAN	CPRMS	CPMAX	CPMIN
130	469	.106	.115	.677	-.479
130	470	.064	.109	.527	-.283
130	471	.022	.149	.587	-.471
130	472	-.447	.076	-.222	-.727
130	501	-.294	.055	-.136	-.545
130	502	-.326	.049	-.193	-.567
130	503	-.413	.056	-.229	-.656
130	504	-.036	.046	.120	-.251
130	505	-.261	.074	-.042	-.616
130	506	-.124	.046	.046	-.325
130	507	-.284	.057	-.103	-.529
130	508	-.349	.066	-.148	-.675
130	509	-.129	.044	.054	-.312
130	510	-.142	.047	.058	-.333
130	9124	-.484	.096	-.263	-.948
130	9140	-.430	.073	-.222	-.740
130	9213	-.320	.058	-.129	-.607
130	9218	-.289	.045	-.150	-.477
130	9317	-.293	.041	-.150	-.668
130	9322	-.347	.151	.370	-.877
130	9348	-.253	.054	-.081	-.481
130	9355	-.274	.149	.314	-.922
140	101	-.314	.058	-.089	-.707
140	102	-.290	.053	-.093	-.537
140	103	-.367	.056	-.191	-.642
140	104	-.309	.054	-.157	-.648
140	105	-.329	.056	-.142	-.771
140	106	-.303	.054	-.117	-.549
140	107	-.384	.056	-.203	-.746
140	108	-.309	.051	-.145	-.521
140	109	-.316	.051	-.149	-.610
140	110	-.273	.049	-.133	-.464
140	111	-.378	.052	-.222	-.700
140	112	-.313	.049	-.164	-.617
140	113	-.321	.050	-.161	-.504
140	114	-.310	.052	-.150	-.608
140	115	-.399	.060	-.242	-.835
140	116	-.336	.061	-.125	-.866
140	117	-.342	.051	-.163	-.628
140	118	-.325	.050	-.162	-.610
140	119	-.411	.052	-.220	-.710
140	120	-.356	.053	-.212	-.617
140	121	-.380	.073	-.181	-.912
140	122	-.370	.082	-.150	-.950
140	123	-.491	.094	-.220	-1.084
140	124	-.423	.093	-.121	-.962
140	125	-.381	.061	-.163	-.628
140	126	-.364	.060	-.159	-.608
140	127	-.455	.064	-.275	-.700
140	128	-.405	.070	-.188	-.751

WD	TAP	CPMEAN	CPRMS	CPMAX	CPMIN
140	129	-.437	.086	-.211	-.847
140	130	-.427	.092	-.202	-.908
140	131	-.517	.095	-.268	-1.031
140	132	-.435	.085	-.200	-.785
140	133	-.440	.081	-.227	-.801
140	134	-.421	.083	-.188	-.754
140	135	-.515	.090	-.249	-.891
140	136	-.457	.092	-.188	-1.034
140	137	-.468	.088	-.207	-.928
140	138	-.449	.097	-.079	-.983
140	139	-.546	.111	-.092	-1.216
140	140	-.425	.084	-.185	-.888
140	141	-.444	.092	-.237	-1.161
140	142	-.433	.096	-.195	-1.080
140	143	-.540	.112	-.259	-1.342
140	144	-.472	.105	-.202	-1.020
140	145	-.478	.093	-.234	-.836
140	146	-.455	.105	-.129	-1.134
140	147	-.552	.115	-.203	-1.361
140	148	-.442	.097	-.233	-.938
140	149	-.443	.094	-.221	-.946
140	150	-.428	.098	-.209	-1.217
140	151	-.523	.103	-.280	-1.115
140	152	-.442	.098	-.171	-.902
140	153	-.428	.100	-.110	-.875
140	154	-.378	.101	-.060	-1.080
140	155	-.463	.116	-.119	-1.214
140	156	-.433	.105	-.212	-1.756
140	157	-.416	.100	-.225	-1.474
140	158	-.392	.104	-.200	-1.208
140	159	-.502	.110	-.234	-1.243
140	160	-.368	.086	-.149	-.828
140	161	-.476	.111	-.186	-.939
140	162	-.404	.103	-.162	-1.059
140	163	-.433	.106	-.099	-1.002
140	164	-.328	.109	.016	-.905
140	165	-.334	.128	.056	-1.050
140	166	-.333	.082	-.086	-.757
140	167	-.450	.107	-.172	-1.016
140	168	-.531	.120	-.226	-1.075
140	169	-.539	.117	-.218	-1.043
140	170	-.395	.106	-.164	-.873
140	171	-.439	.110	-.203	-.971
140	172	-.444	.092	-.155	-.942
140	173	-.446	.098	-.111	-.996
140	174	-.486	.122	-.140	-1.407
140	201	-.309	.059	-.126	-.624
140	202	-.385	.056	-.208	-.724
140	203	-.314	.049	-.152	-.533
140	204	-.322	.054	-.151	-.541

WD	TAP	CPMEAN	CPRMS	CPMAX	CPMIN
140	205	-.295	.053	-.133	-.518
140	206	-.372	.057	-.196	-.608
140	207	-.332	.060	-.157	-.658
140	208	-.327	.052	-.173	-.547
140	209	-.321	.048	-.170	-.497
140	210	-.348	.050	-.173	-.548
140	211	-.308	.049	-.131	-.508
140	212	-.310	.049	-.132	-.511
140	213	-.351	.062	-.133	-.791
140	214	-.379	.056	-.168	-.778
140	215	-.340	.048	-.159	-.541
140	216	-.337	.050	-.199	-.641
140	217	-.329	.050	-.190	-.547
140	218	-.360	.052	-.215	-.580
140	219	-.368	.070	-.106	-.712
140	220	-.359	.063	-.168	-.698
140	221	-.358	.058	-.168	-.709
140	222	-.384	.059	-.239	-.805
140	223	-.339	.055	-.174	-.649
140	224	-.344	.058	-.161	-.605
140	225	-.410	.078	-.138	-.823
140	226	-.430	.075	-.183	-.983
140	227	-.383	.079	-.199	-.978
140	228	-.380	.072	-.182	-.883
140	229	-.382	.072	-.183	-.941
140	230	-.413	.073	-.225	-.961
140	231	-.420	.069	-.244	-.828
140	232	-.403	.078	-.213	-1.010
140	233	-.406	.092	-.178	-1.317
140	234	-.440	.101	-.180	-1.232
140	235	-.404	.106	-.058	-1.157
140	236	-.452	.086	-.221	-.967
140	237	-.438	.088	-.208	-1.025
140	238	-.466	.105	-.148	-1.398
140	239	-.419	.112	-.131	-1.288
140	240	-.406	.117	-.113	-1.286
140	241	-.470	.107	-.133	-1.103
140	242	-.522	.136	.017	-1.319
140	243	-.475	.139	-.111	-1.217
140	244	-.452	.135	-.089	-1.180
140	245	-.448	.167	-.068	-1.414
140	246	-.428	.110	-.029	-.980
140	247	-.386	.103	.022	-.800
140	248	-.381	.100	.161	-.885
140	249	-.378	.104	-.053	-.863
140	250	-.380	.098	-.074	-.800
140	251	-.331	.093	-.031	-.725
140	252	-.386	.110	-.007	-.857
140	253	-.367	.106	-.041	-.906
140	254	-.317	.103	.032	-.740

APPENDIX A -- PRESSURE DATA: CONFIGURATION A: 1221 BRICKELL BUILDING

WD	TAP	CPMEAN	CPRMS	CPMAX	CPMIN
140	255	-.344	.098	-.091	-.790
140	256	-.321	.084	-.084	-.794
140	257	-.314	.084	-.093	-.779
140	258	-.402	.119	-.024	-1.059
140	259	-.362	.114	-.001	-.845
140	260	-.343	.100	-.005	-.919
140	261	-.320	.114	-.056	-.963
140	262	-.315	.094	-.084	-.802
140	263	-.271	.083	-.041	-.687
140	264	-.351	.188	.134	-1.715
140	265	-.337	.177	.149	-1.522
140	266	-.331	.129	.185	-.978
140	267	-.332	.173	-.003	-1.348
140	268	-.320	.163	-.036	-1.303
140	269	-.298	.149	-.021	-1.078
140	270	-.324	.075	-.047	-.692
140	271	-.316	.070	-.097	-.627
140	272	-.304	.064	-.108	-1.091
140	273	-.341	.063	-.124	-.703
140	274	-.331	.080	.003	-.746
140	275	-.320	.077	-.031	-.651
140	276	-.309	.075	-.022	-.816
140	277	-.355	.070	-.154	-.788
140	278	-.315	.067	-.131	-.635
140	279	-.319	.066	-.114	-.753
140	280	-.333	.063	-.149	-.716
140	281	-.365	.072	-.151	-.830
140	282	-.386	.076	-.193	-.731
140	283	-.372	.075	-.168	-.793
140	284	-.347	.089	-.149	-.968
140	285	-.390	.093	-.168	-1.159
140	301	-.086	.074	.146	-.459
140	302	.036	.086	.306	-.403
140	303	-.129	.052	.115	-.305
140	304	-.015	.067	.259	-.250
140	305	.135	.104	.482	-.318
140	306	.102	.084	.452	-.189
140	307	.239	.118	.573	-.307
140	308	.227	.108	.625	-.134
140	309	.260	.136	.640	-.363
140	310	.222	.217	.731	-.684
140	311	-.195	.042	.017	-.369
140	312	-.101	.050	.154	-.307
140	313	.026	.077	.336	-.239
140	314	.203	.105	.542	-.179
140	315	.232	.209	.742	-.734
140	316	.116	.250	.792	-1.149
140	317	-.254	.042	-.100	-.431
140	318	-.135	.044	.056	-.335
140	319	-.001	.065	.234	-.285
140	320	.144	.107	.480	-.434
140	321	.014	.266	.722	-.944
140	322	-.006	.240	.850	-.934
140	323	-.234	.047	-.025	-.476
140	324	-.142	.050	.150	-.425
140	325	-.227	.050	-.007	-.476
140	326	-.123	.053	.154	-.407
140	327	-.023	.064	.268	-.308
140	328	.065	.116	.458	-.610
140	329	-.089	.255	.624	-1.140
140	330	-.097	.226	.695	-1.019
140	331	-.223	.055	-.019	-.572
140	332	-.222	.059	-.017	-.490
140	333	-.180	.059	.075	-.440
140	334	-.095	.050	.127	-.312
140	335	-.074	.057	.337	-.272
140	336	-.276	.063	-.048	-.692
140	337	-.350	.079	-.027	-.767
140	338	-.161	.054	.188	-.382
140	339	-.322	.084	-.051	-.692
140	340	-.241	.067	.023	-.461
140	341	-.243	.058	-.020	-.425
140	342	-.128	.052	.110	-.288
140	343	-.063	.053	.331	-.272
140	344	.001	.065	.420	-.338
140	345	-.019	.126	.435	-.744
140	346	-.084	.206	.549	-.842
140	347	-.106	.186	.541	-.853
140	348	-.210	.067	-.019	-.516
140	349	-.211	.053	-.025	-.456
140	350	-.100	.042	.092	-.290
140	351	-.038	.049	.146	-.238
140	352	.012	.059	.273	-.280
140	353	-.024	.095	.349	-.520
140	354	-.070	.154	.471	-.707
140	355	-.119	.140	.404	-.690
140	356	-.028	.092	.342	-.570
140	357	-.119	.119	.280	-.711
140	358	-.005	.050	.316	-.193
140	359	.038	.076	.440	-.218
140	360	-.201	.078	.019	-.561
140	361	-.199	.061	-.018	-.445
140	362	-.072	.049	.168	-.229
140	363	.010	.056	.290	-.134
140	364	-.022	.064	.318	-.211
140	365	-.025	.052	.320	-.180
140	366	.031	.063	.370	-.146
140	367	.040	.070	.466	-.231
140	368	.077	.088	.523	-.133
140	369	.013	.075	.451	-.278
140	370	-.034	.138	.429	-.637
140	371	-.089	.145	.411	-.741
140	372	-.254	.065	-.051	-.565
140	373	-.190	.057	.077	-.468
140	374	-.177	.057	.130	-.466
140	401	-.033	.062	.161	-.360
140	402	-.119	.043	.020	-.281
140	403	-.148	.038	-.030	-.336
140	404	-.226	.037	-.096	-.387
140	405	-.178	.038	-.051	-.323
140	406	.010	.091	.269	-.561
140	407	-.186	.039	-.055	-.345
140	408	.002	.099	.293	-.445
140	409	-.005	.057	.177	-.337
140	410	-.058	.050	.108	-.212
140	411	-.094	.043	.052	-.224
140	412	-.244	.038	-.100	-.378
140	413	.101	.129	.410	-.478
140	414	.068	.073	.301	-.160
140	415	.024	.062	.235	-.195
140	416	-.085	.052	.120	-.309
140	417	-.165	.038	-.014	-.339
140	418	.179	.119	.605	-.452
140	419	-.125	.197	.498	-.871
140	420	-.263	.138	.204	-.820
140	421	-.247	.107	.193	-.730
140	422	-.292	.072	.020	-.534
140	423	.455	.163	.929	-.088
140	424	.411	.147	.876	-.000
140	425	.295	.119	.747	-.025
140	426	.173	.097	.592	-.090
140	427	.036	.074	.286	-.205
140	428	-.055	.065	.209	-.289
140	429	.484	.165	1.018	-.156
140	430	.483	.151	.973	.078
140	431	.398	.133	.789	.012
140	432	.225	.102	.595	-.108
140	433	.064	.076	.329	-.173
140	434	-.123	.061	.092	-.327
140	435	.425	.154	.923	-.160
140	436	.483	.146	.901	.073
140	437	.436	.129	.965	.077
140	438	.220	.103	.655	-.086
140	439	.041	.068	.328	-.262
140	440	-.091	.056	.127	-.295
140	441	.349	.152	.812	-.204
140	442	.338	.158	.845	-.211
140	443	.337	.134	.794	-.105
140	444	.203	.104	.565	-.126
140	445	.017	.074	.360	-.223

APPENDIX A -- PRESSURE DATA: CONFIGURATION A; 1221 BRICKELL BUILDING

WD	TAP	CPMEAN	CPRMS	CPMAX	CPMIN
140	446	-.176	.063	.186	-.425
140	447	.239	.132	.801	-.365
140	448	.274	.139	.757	-.236
140	449	.270	.134	.805	-.164
140	450	.101	.116	.626	-.322
140	451	-.035	.086	.330	-.394
140	452	-.173	.059	-.005	-.407
140	453	.028	.069	.265	-.385
140	454	-.044	.058	.159	-.413
140	455	-.023	.040	.118	-.255
140	456	-.080	.045	.118	-.251
140	457	-.117	.048	.100	-.350
140	458	-.274	.059	-.084	-.526
140	459	.021	.049	.203	-.284
140	460	-.169	.068	.157	-.558
140	461	-.196	.073	.114	-.683
140	462	-.174	.050	.006	-.392
140	463	-.044	.059	.303	-.300
140	464	-.226	.095	.182	-.561
140	465	.114	.089	.593	-.135
140	466	-.400	.109	-.046	-.925
140	467	.121	.098	.652	-.114
140	468	.046	.064	.419	-.207
140	469	-.027	.156	.492	-.589
140	470	-.013	.105	.442	-.423
140	471	-.082	.178	.498	-.695
140	472	-.447	.101	-.192	-.903
140	501	-.327	.069	-.133	-.840
140	502	-.348	.056	-.175	-.630
140	503	-.451	.061	-.247	-.808
140	504	-.053	.074	.223	-.408
140	505	-.302	.086	-.037	-.758
140	506	-.092	.045	.072	-.395
140	507	-.286	.070	-.081	-.627
140	508	-.377	.082	-.186	-.853
140	509	-.113	.041	.036	-.366
140	510	-.166	.051	-.008	-.376
140	9124	-.499	.103	-.259	-1.041
140	9140	-.452	.097	-.215	-.884
140	9213	-.343	.061	-.085	-.744
140	9218	-.302	.047	-.157	-.512
140	9317	-.277	.043	-.108	-.437
140	9322	-.012	.224	.916	-.743
140	9348	-.223	.064	-.019	-.514
140	9355	-.094	.157	.451	-.776
150	101	-.337	.057	-.179	-.890
150	102	-.312	.053	-.157	-.561
150	103	-.378	.054	-.198	-.609
150	104	-.326	.053	-.161	-.729
150	105	-.342	.054	-.190	-.595
150	106	-.305	.052	-.143	-.542
150	107	-.387	.053	-.222	-.628
150	108	-.314	.052	-.154	-.540
150	109	-.322	.054	-.128	-.563
150	110	-.278	.054	-.116	-.584
150	111	-.383	.055	-.207	-.626
150	112	-.320	.053	-.154	-.547
150	113	-.337	.052	-.197	-.660
150	114	-.328	.052	-.192	-.773
150	115	-.412	.058	-.193	-.953
150	116	-.353	.059	-.197	-1.002
150	117	-.339	.058	-.149	-.614
150	118	-.324	.058	-.157	-.596
150	119	-.407	.061	-.229	-.693
150	120	-.354	.061	-.178	-.720
150	121	-.374	.068	-.154	-.950
150	122	-.365	.073	-.119	-.931
150	123	-.472	.094	-.229	-1.227
150	124	-.414	.098	-.185	-1.134
150	125	-.351	.063	-.165	-.612
150	126	-.337	.061	-.166	-.594
150	127	-.427	.066	-.227	-.710
150	128	-.382	.068	-.192	-.724
150	129	-.421	.080	-.197	-.876
150	130	-.412	.089	-.174	-.861
150	131	-.503	.083	-.291	-.881
150	132	-.424	.076	-.231	-.784
150	133	-.419	.076	-.223	-.826
150	134	-.403	.078	-.171	-.872
150	135	-.494	.080	-.260	-.907
150	136	-.438	.087	-.154	-.856
150	137	-.442	.084	-.190	-.821
150	138	-.426	.102	-.131	-1.045
150	139	-.518	.116	-.190	-1.268
150	140	-.400	.081	-.166	-.775
150	141	-.431	.089	-.193	-.876
150	142	-.427	.093	-.181	-.936
150	143	-.535	.115	-.270	-1.461
150	144	-.464	.103	-.176	-.990
150	145	-.442	.088	-.096	-.807
150	146	-.424	.111	-.046	-1.007
150	147	-.518	.122	-.133	-1.266
150	148	-.434	.093	-.204	-.871
150	149	-.447	.109	-.202	-1.125
150	150	-.438	.118	-.183	-1.304
150	151	-.527	.122	-.248	-1.398
150	152	-.434	.118	-.171	-1.177
150	153	-.386	.104	-.061	-.821
150	154	-.336	.105	-.048	-.967
150	155	-.419	.126	-.099	-1.285
150	156	-.423	.110	-.166	-1.197
150	157	-.437	.100	-.179	-.906
150	158	-.422	.110	-.176	-1.031
150	159	-.524	.129	-.178	-1.251
150	160	-.395	.095	-.144	-.907
150	161	-.438	.115	-.087	-.982
150	162	-.393	.123	-.004	-1.276
150	163	-.392	.125	.007	-1.105
150	164	-.287	.116	.105	-1.211
150	165	-.310	.125	.097	-1.099
150	166	-.387	.099	-.105	-.863
150	167	-.444	.099	-.138	-1.008
150	168	-.503	.131	-.197	-1.290
150	169	-.512	.124	-.213	-1.357
150	170	-.400	.107	-.173	-1.088
150	171	-.431	.110	-.202	-1.207
150	172	-.418	.099	-.127	-.988
150	173	-.419	.104	-.112	-.979
150	174	-.465	.130	-.108	-1.206
150	201	-.353	.077	-.169	-1.042
150	202	-.424	.069	-.241	-.893
150	203	-.347	.057	-.185	-.631
150	204	-.337	.050	-.183	-.522
150	205	-.313	.048	-.166	-.504
150	206	-.388	.051	-.239	-.604
150	207	-.354	.063	-.192	-.741
150	208	-.362	.067	-.179	-.801
150	209	-.349	.058	-.156	-.594
150	210	-.376	.055	-.184	-.579
150	211	-.334	.053	-.140	-.519
150	212	-.338	.054	-.159	-.647
150	213	-.397	.082	-.196	-1.033
150	214	-.425	.074	-.231	-.979
150	215	-.373	.058	-.205	-.657
150	216	-.365	.052	-.212	-.582
150	217	-.356	.053	-.194	-.537
150	218	-.390	.055	-.221	-.564
150	219	-.424	.099	-.140	-1.158
150	220	-.424	.088	-.205	-1.055
150	221	-.422	.084	-.221	-.870
150	222	-.445	.082	-.238	-.890
150	223	-.393	.075	-.152	-.807
150	224	-.376	.069	-.198	-.741
150	225	-.408	.083	-.143	-1.020
150	226	-.444	.085	-.236	-1.049
150	227	-.422	.102	-.193	-1.006
150	228	-.446	.115	-.186	-1.320
150	229	-.456	.120	-.179	-1.363
150	230	-.490	.121	-.171	-1.449
150	231	-.442	.087	-.228	-.961

APPENDIX A -- PRESSURE DATA: CONFIGURATION A: 1221 BRICKELL BUILDING

WD	TAP	CPMEAN	CPRMS	CPMAX	CPMIN
150	232	-.442	.105	-.246	-1.151
150	233	-.455	.127	-.189	-1.647
150	234	-.499	.139	-.229	-1.407
150	235	-.485	.163	-.109	-1.461
150	236	-.442	.094	-.193	-.960
150	237	-.440	.109	-.118	-1.018
150	238	-.480	.133	-.124	-1.188
150	239	-.435	.151	-.006	-1.992
150	240	-.458	.162	.031	-1.450
150	241	-.457	.130	-.003	-1.141
150	242	-.508	.160	.023	-1.526
150	243	-.458	.162	.025	-1.559
150	244	-.433	.154	-.017	-1.110
150	245	-.474	.213	-.041	-1.882
150	246	-.396	.104	-.010	-1.109
150	247	-.351	.100	-.028	-.865
150	248	-.348	.107	.034	-.852
150	249	-.339	.114	-.013	-.908
150	250	-.350	.103	-.017	-.823
150	251	-.303	.096	-.013	-.726
150	252	-.347	.100	.128	-.907
150	253	-.325	.098	.017	-.757
150	254	-.257	.101	.086	-.789
150	255	-.305	.091	.020	-.759
150	256	-.288	.087	-.058	-.690
150	257	-.281	.087	-.043	-.644
150	258	-.375	.110	.008	-.999
150	259	-.331	.105	.075	-.872
150	260	-.325	.096	-.039	-.960
150	261	-.279	.095	-.003	-.988
150	262	-.286	.082	-.035	-.818
150	263	-.242	.070	-.046	-.551
150	264	-.304	.167	.169	-1.351
150	265	-.288	.153	.125	-1.336
150	266	-.286	.103	.072	-.773
150	267	-.265	.109	-.054	-1.042
150	268	-.254	.112	.024	-1.371
150	269	-.240	.106	.082	-1.171
150	270	-.357	.103	-.108	-.934
150	271	-.351	.092	-.076	-1.005
150	272	-.368	.089	-.068	-.853
150	273	-.390	.086	-.067	-.877
150	274	-.346	.105	-.025	-1.092
150	275	-.325	.095	.002	-.784
150	276	-.325	.100	-.015	-1.137
150	277	-.410	.116	-.113	-1.171
150	278	-.379	.112	-.086	-1.449
150	279	-.364	.096	-.123	-1.382
150	280	-.364	.090	-.139	-.877
150	281	-.399	.102	-.130	-.906
150	282	-.392	.093	-.160	-.924
150	283	-.386	.100	-.127	-.996
150	284	-.393	.135	-.024	-1.234
150	285	-.451	.164	-.053	-1.407
150	301	-.003	.085	.299	-.373
150	302	.128	.100	.464	-.286
150	303	-.054	.067	.198	-.369
150	304	.094	.089	.388	-.341
150	305	.223	.116	.570	-.599
150	306	.234	.113	.621	-.316
150	307	.317	.129	.707	-.526
150	308	.369	.146	.853	-.210
150	309	.355	.150	.788	-.664
150	310	.417	.165	.884	-.953
150	311	-.142	.060	.106	-.376
150	312	-.014	.080	.348	-.301
150	313	.150	.120	.659	-.321
150	314	.346	.153	.831	-.334
150	315	.445	.170	.914	-.800
150	316	.461	.208	.957	-.539
150	317	-.217	.061	.018	-.482
150	318	-.074	.070	.210	-.358
150	319	.097	.099	.447	-.198
150	320	.262	.136	.736	-.186
150	321	.309	.189	.870	-.724
150	322	.323	.221	.879	-.694
150	323	-.203	.067	.098	-.548
150	324	-.085	.078	.322	-.388
150	325	-.168	.073	.173	-.482
150	326	-.054	.081	.366	-.380
150	327	.067	.100	.530	-.239
150	328	.186	.127	.653	-.366
150	329	.199	.193	.793	-1.142
150	330	.206	.222	.915	-1.031
150	331	-.204	.081	.067	-.557
150	332	-.199	.094	.246	-.622
150	333	-.119	.084	.289	-.422
150	334	-.031	.075	.323	-.240
150	335	-.005	.084	.305	-.324
150	336	-.247	.077	.019	-.602
150	337	-.305	.090	-.016	-.751
150	338	-.105	.071	.174	-.378
150	339	-.285	.091	-.008	-.678
150	340	-.199	.065	.008	-.474
150	341	-.182	.061	.091	-.433
150	342	-.069	.066	.266	-.301
150	343	-.005	.069	.320	-.203
150	344	.064	.083	.412	-.226
150	345	.084	.104	.531	-.558
150	346	.119	.148	.687	-.654
150	347	.114	.182	.663	-.740
150	348	-.175	.059	.082	-.465
150	349	-.163	.052	.124	-.356
150	350	-.059	.053	.298	-.285
150	351	.005	.063	.365	-.181
150	352	.055	.075	.453	-.165
150	353	.051	.092	.464	-.265
150	354	.068	.122	.528	-.588
150	355	.045	.125	.549	-.518
150	356	.064	.090	.529	-.379
150	357	.007	.091	.426	-.440
150	358	.029	.071	.495	-.224
150	359	.087	.079	.609	-.151
150	360	-.150	.068	.167	-.487
150	361	-.137	.059	.202	-.340
150	362	-.021	.059	.429	-.211
150	363	.073	.068	.387	-.086
150	364	.031	.080	.446	-.228
150	365	.030	.083	.475	-.182
150	366	.080	.088	.492	-.138
150	367	.101	.092	.655	-.157
150	368	.159	.103	.635	-.098
150	369	.085	.096	.593	-.231
150	370	.085	.120	.683	-.562
150	371	.073	.133	.659	-.485
150	372	-.208	.069	.090	-.542
150	373	-.134	.065	.233	-.354
150	374	-.120	.065	.216	-.344
150	401	-.095	.098	.179	-.502
150	402	-.150	.049	.039	-.481
150	403	-.174	.038	-.037	-.406
150	404	-.246	.038	-.060	-.498
150	405	-.208	.041	-.073	-.455
150	406	-.110	.139	.306	-.660
150	407	-.212	.041	-.069	-.451
150	408	-.165	.163	.226	-.846
150	409	-.057	.076	.135	-.504
150	410	-.091	.046	.063	-.555
150	411	-.133	.039	.019	-.386
150	412	-.275	.039	-.136	-.473
150	413	-.109	.181	.429	-.789
150	414	.029	.075	.242	-.457
150	415	-.019	.055	.203	-.318
150	416	-.119	.045	.084	-.356
150	417	-.200	.037	-.084	-.342
150	418	.120	.159	.538	-1.142
150	419	.005	.166	.421	-.842
150	420	-.191	.145	.284	-.729
150	421	-.206	.118	.228	-.683
150	422	-.279	.083	.003	-.537

APPENDIX A -- PRESSURE DATA: CONFIGURATION A: 1221 BRICKELL BUILDING

WD	TAP	CPMEAN	CPRMS	CPMAX	CPMIN
150	423	.337	.211	.856	-1.011
150	424	.324	.157	.761	-.849
150	425	.189	.124	.584	-.244
150	426	.077	.097	.455	-.287
150	427	-.042	.075	.238	-.388
150	428	-.124	.060	.103	-.383
150	429	.372	.241	1.047	-.954
150	430	.388	.169	.886	-.559
150	431	.286	.129	.668	-.141
150	432	.138	.099	.596	-.236
150	433	-.019	.073	.305	-.359
150	434	-.211	.061	.066	-.489
150	435	.340	.215	.913	-.557
150	436	.330	.187	.857	-.586
150	437	.273	.132	.720	-.107
150	438	.056	.106	.426	-.304
150	439	-.071	.073	.216	-.347
150	440	-.170	.057	.150	-.360
150	441	.232	.207	.781	-.639
150	442	.180	.187	.738	-.771
150	443	.178	.130	.637	-.488
150	444	.058	.101	.553	-.277
150	445	-.090	.077	.260	-.324
150	446	-.268	.069	.027	-.506
150	447	.100	.185	.680	-.844
150	448	.106	.145	.761	-.607
150	449	.096	.107	.571	-.291
150	450	-.072	.094	.395	-.399
150	451	-.147	.075	.226	-.452
150	452	-.249	.059	-.044	-.444
150	453	-.078	.111	.227	-.667
150	454	-.138	.089	.122	-.698
150	455	-.065	.044	.103	-.378
150	456	-.127	.043	.059	-.296
150	457	-.166	.050	.004	-.380
150	458	-.334	.064	-.121	-.681
150	459	-.026	.094	.209	-.542
150	460	-.192	.078	.188	-.603
150	461	-.300	.138	.034	-1.199
150	462	-.185	.053	-.010	-.441
150	463	-.036	.103	.407	-.520
150	464	-.230	.099	.139	-.603
150	465	.179	.105	.599	-.176
150	466	-.407	.119	-.041	-.932
150	467	.192	.111	.722	-.200
150	468	.063	.081	.458	-.354
150	469	-.252	.147	.494	-.847
150	470	-.134	.104	.378	-.637
150	471	-.285	.178	.456	-.803
150	472	-.438	.114	-.161	-1.096

WD	TAP	CPMEAN	CPRMS	CPMAX	CPMIN
150	501	-.387	.116	-.029	-.977
150	502	-.413	.101	-.199	-1.061
150	503	-.500	.084	-.299	-1.034
150	504	-.102	.116	.295	-.710
150	505	-.328	.084	-.094	-.801
150	506	-.122	.053	.060	-.423
150	507	-.269	.065	-.068	-.635
150	508	-.383	.088	-.198	-.837
150	509	-.123	.047	.105	-.366
150	510	-.178	.050	.001	-.430
150	9124	-.510	.095	-.199	-1.092
150	9140	-.443	.097	-.208	-1.014
150	9213	-.377	.074	-.197	-.851
150	9218	-.320	.052	-.178	-.481
150	9317	-.244	.062	.025	-.464
150	9322	.316	.224	.965	-.509
150	9348	-.174	.054	.038	-.412
150	9355	.063	.122	.498	-.585
160	101	-.342	.064	-.140	-.670
160	102	-.315	.057	-.134	-.567
160	103	-.369	.051	-.202	-.560
160	104	-.326	.053	-.181	-.584
160	105	-.346	.063	-.156	-.591
160	106	-.289	.052	-.132	-.531
160	107	-.375	.054	-.202	-.660
160	108	-.298	.053	-.124	-.560
160	109	-.302	.053	-.124	-.559
160	110	-.265	.047	-.142	-.456
160	111	-.362	.053	-.204	-.613
160	112	-.303	.050	-.152	-.539
160	113	-.319	.050	-.172	-.550
160	114	-.314	.051	-.186	-.543
160	115	-.401	.057	-.216	-.651
160	116	-.351	.060	-.195	-.655
160	117	-.323	.050	-.154	-.509
160	118	-.308	.050	-.132	-.496
160	119	-.387	.052	-.195	-.586
160	120	-.340	.051	-.155	-.541
160	121	-.364	.059	-.193	-.634
160	122	-.362	.066	-.172	-.669
160	123	-.444	.077	-.190	-.919
160	124	-.394	.085	-.150	-.852
160	125	-.320	.056	-.115	-.516
160	126	-.307	.055	-.123	-.501
160	127	-.392	.058	-.195	-.603
160	128	-.353	.061	-.167	-.729
160	129	-.385	.067	-.170	-.789
160	130	-.379	.074	-.165	-.901
160	131	-.480	.081	-.233	-.950
160	132	-.401	.069	-.159	-.721

WD	TAP	CPMEAN	CPRMS	CPMAX	CPMIN
160	133	-.384	.068	-.211	-.725
160	134	-.371	.070	-.169	-.728
160	135	-.465	.079	-.245	-.866
160	136	-.412	.097	-.190	-1.030
160	137	-.408	.090	-.172	-.957
160	138	-.394	.127	-.092	-1.272
160	139	-.476	.137	-.129	-1.417
160	140	-.361	.081	-.174	-.800
160	141	-.382	.084	-.179	-.884
160	142	-.381	.089	-.176	-.985
160	143	-.484	.109	-.238	-1.434
160	144	-.423	.096	-.131	-1.011
160	145	-.396	.084	-.138	-1.087
160	146	-.374	.107	-.046	-1.284
160	147	-.461	.117	-.136	-1.232
160	148	-.396	.093	-.176	-.935
160	149	-.412	.095	-.145	-.900
160	150	-.404	.102	-.158	-.952
160	151	-.495	.111	-.242	-1.132
160	152	-.415	.105	-.098	-.954
160	153	-.368	.099	-.074	-.866
160	154	-.310	.096	.008	-.868
160	155	-.384	.114	-.010	-1.063
160	156	-.390	.092	-.197	-1.004
160	157	-.394	.090	-.190	-.882
160	158	-.378	.099	-.155	-.985
160	159	-.480	.117	-.219	-1.075
160	160	-.366	.095	-.136	-.785
160	161	-.411	.099	-.127	-.905
160	162	-.369	.108	-.095	-1.073
160	163	-.367	.123	.014	-1.109
160	164	-.270	.112	.028	-.850
160	165	-.260	.115	.010	-.989
160	166	-.358	.097	-.132	-.826
160	167	-.399	.088	-.162	-.826
160	168	-.448	.119	-.178	-1.039
160	169	-.471	.113	-.206	-1.064
160	170	-.362	.089	-.157	-.743
160	171	-.379	.090	-.172	-.800
160	172	-.366	.092	-.101	-1.175
160	173	-.363	.093	-.109	-1.179
160	174	-.414	.126	-.077	-1.146
160	201	-.374	.097	-.130	-1.055
160	202	-.440	.087	-.226	-.928
160	203	-.358	.067	-.129	-.828
160	204	-.350	.061	-.159	-.623
160	205	-.328	.056	-.130	-.550
160	206	-.399	.058	-.202	-.632
160	207	-.383	.093	-.076	-.892
160	208	-.385	.092	-.132	-1.134

APPENDIX A -- PRESSURE DATA: CONFIGURATION A: 1221 BRICKELL BUILDING

WD	TAP	CPMEAN	CPRMS	CPMAX	CPMIN
160	209	-.363	.069	-.148	-.739
160	210	-.385	.060	-.171	-.667
160	211	-.340	.056	-.141	-.549
160	212	-.345	.054	-.178	-.564
160	213	-.412	.091	-.198	-.881
160	214	-.447	.086	-.258	-.942
160	215	-.389	.068	-.219	-.735
160	216	-.361	.059	-.158	-.581
160	217	-.353	.059	-.153	-.572
160	218	-.390	.061	-.183	-.610
160	219	-.430	.110	-.169	-1.052
160	220	-.433	.097	-.187	-1.114
160	221	-.427	.087	-.180	-1.103
160	222	-.454	.082	-.233	-.843
160	223	-.401	.076	-.187	-.715
160	224	-.396	.071	-.178	-.749
160	225	-.408	.089	-.148	-1.045
160	226	-.451	.092	-.201	-.954
160	227	-.435	.106	-.003	-.964
160	228	-.441	.117	-.144	-.980
160	229	-.468	.133	-.098	-1.260
160	230	-.514	.140	-.186	-1.507
160	231	-.423	.096	-.177	-1.070
160	232	-.437	.109	-.192	-1.083
160	233	-.448	.124	-.085	-1.290
160	234	-.492	.134	-.141	-1.430
160	235	-.495	.190	-.084	-1.526
160	236	-.424	.106	-.077	-1.037
160	237	-.421	.119	.042	-1.167
160	238	-.467	.141	-.027	-1.292
160	239	-.428	.156	.040	-1.445
160	240	-.458	.182	.031	-1.460
160	241	-.399	.124	.007	-.916
160	242	-.435	.140	.057	-1.106
160	243	-.392	.140	.138	-1.146
160	244	-.397	.139	.067	-1.117
160	245	-.444	.187	-.046	-1.501
160	246	-.380	.114	.045	-1.205
160	247	-.334	.107	.123	-.966
160	248	-.327	.113	.041	-1.744
160	249	-.320	.100	-.018	-.848
160	250	-.340	.090	-.067	-.803
160	251	-.294	.085	-.038	-.720
160	252	-.337	.117	.010	-1.410
160	253	-.321	.111	.029	-1.043
160	254	-.252	.091	.058	-.641
160	255	-.300	.091	-.081	-.748
160	256	-.269	.074	-.060	-.610
160	257	-.260	.074	-.046	-.594
160	258	-.366	.137	.037	-1.289
160	259	-.318	.121	.015	-1.118
160	260	-.322	.102	.127	-.829
160	261	-.279	.095	-.043	-.761
160	262	-.288	.082	-.067	-.657
160	263	-.241	.069	-.041	-.532
160	264	-.315	.246	.209	-2.269
160	265	-.291	.201	.126	-1.771
160	266	-.307	.129	.072	-1.329
160	267	-.275	.118	-.028	-1.251
160	268	-.253	.101	-.029	-.927
160	269	-.238	.095	-.016	-.798
160	270	-.371	.114	-.078	-1.135
160	271	-.371	.103	-.072	-.907
160	272	-.404	.113	-.150	-1.132
160	273	-.412	.107	-.168	-1.088
160	274	-.354	.113	-.112	-1.035
160	275	-.338	.102	-.026	-.944
160	276	-.346	.108	-.039	-1.147
160	277	-.418	.125	-.123	-1.523
160	278	-.403	.119	-.161	-1.281
160	279	-.397	.106	-.130	-1.181
160	280	-.378	.096	-.085	-.818
160	281	-.416	.118	-.080	-1.214
160	282	-.385	.093	-.075	-.850
160	283	-.389	.099	-.103	-.979
160	284	-.391	.125	.032	-1.057
160	285	-.465	.182	-.009	-1.723
160	301	.033	.101	.414	-.364
160	302	.152	.116	.578	-.270
160	303	.015	.088	.281	-.295
160	304	.160	.116	.508	-.255
160	305	.182	.143	.613	-.471
160	306	.288	.143	.702	-.129
160	307	.262	.140	.769	-.279
160	308	.439	.156	.933	-.085
160	309	.284	.163	.786	-.300
160	310	.344	.172	.908	-.270
160	311	-.072	.069	.204	-.310
160	312	.076	.093	.431	-.228
160	313	.246	.134	.712	-.186
160	314	.417	.163	.873	-.182
160	315	.481	.172	.992	-.046
160	316	.479	.185	.992	-.285
160	317	-.138	.072	.177	-.367
160	318	.016	.086	.335	-.223
160	319	.206	.125	.735	-.131
160	320	.362	.157	.978	-.194
160	321	.388	.173	1.000	-.354
160	322	.371	.172	.946	-.389
160	323	-.141	.076	.147	-.403
160	324	-.004	.090	.356	-.278
160	325	-.089	.080	.230	-.351
160	326	.026	.092	.390	-.251
160	327	.143	.111	.586	-.182
160	328	.249	.131	.786	-.107
160	329	.257	.153	.814	-.139
160	330	.248	.157	.792	-.276
160	331	-.157	.089	.163	-.550
160	332	-.099	.138	.630	-.516
160	333	-.029	.099	.411	-.425
160	334	.060	.092	.457	-.175
160	335	.069	.094	.465	-.186
160	336	-.187	.075	.102	-.539
160	337	-.216	.076	.058	-.577
160	338	-.038	.077	.328	-.308
160	339	-.217	.072	.104	-.475
160	340	-.150	.054	.083	-.340
160	341	-.116	.059	.194	-.284
160	342	-.016	.074	.374	-.223
160	343	.053	.084	.404	-.195
160	344	.120	.099	.610	-.143
160	345	.149	.112	.662	-.164
160	346	.179	.114	.790	-.228
160	347	.145	.115	.647	-.252
160	348	-.143	.050	.125	-.374
160	349	-.116	.048	.273	-.302
160	350	-.025	.057	.480	-.171
160	351	.039	.070	.364	-.155
160	352	.085	.084	.491	-.184
160	353	.092	.094	.530	-.161
160	354	.111	.098	.588	-.320
160	355	.087	.101	.628	-.361
160	356	.093	.094	.575	-.143
160	357	.044	.087	.530	-.302
160	358	.033	.075	.425	-.184
160	359	.109	.073	.476	-.188
160	360	-.117	.055	.102	-.342
160	361	-.086	.051	.145	-.296
160	362	.019	.058	.278	-.148
160	363	.097	.081	.648	-.056
160	364	.079	.097	.598	-.175
160	365	.052	.079	.423	-.208
160	366	.078	.080	.402	-.290
160	367	.073	.072	.415	-.179
160	368	.151	.087	.557	-.049
160	369	.074	.084	.534	-.199
160	370	.141	.102	.653	-.385
160	371	.113	.101	.590	-.349
160	372	-.171	.061	.062	-.456
160	373	-.096	.066	.244	-.383

APPENDIX A -- PRESSURE DATA: CONFIGURATION A; 1221 BRICKELL BUILDING

WD	TAP	CPMEAN	CPRMS	CPMAX	CPMIN
160	374	-.081	.067	.294	-.357
160	401	-.290	.115	.107	-.823
160	402	-.232	.090	-.019	-.638
160	403	-.202	.058	-.038	-.528
160	404	-.238	.045	-.074	-.488
160	405	-.229	.047	-.058	-.477
160	406	-.348	.125	.146	-.925
160	407	-.230	.045	-.090	-.455
160	408	-.383	.129	.161	-1.014
160	409	-.208	.131	.108	-.676
160	410	-.136	.070	.051	-.631
160	411	-.149	.042	-.004	-.368
160	412	-.266	.042	-.123	-.497
160	413	-.376	.146	.229	-1.301
160	414	-.138	.184	.189	-1.068
160	415	-.053	.055	.134	-.363
160	416	-.142	.038	.002	-.347
160	417	-.220	.035	-.076	-.347
160	418	-.285	.415	.487	-1.754
160	419	-.035	.106	.271	-.750
160	420	-.145	.114	.145	-.609
160	421	-.176	.099	.119	-.575
160	422	-.240	.071	.007	-.524
160	423	-.139	.280	.604	-2.246
160	424	-.028	.294	.631	-1.308
160	425	.072	.093	.413	-.484
160	426	-.011	.073	.237	-.338
160	427	-.110	.054	.150	-.298
160	428	-.180	.048	-.001	-.353
160	429	-.149	.285	.796	-1.072
160	430	.010	.299	.664	-1.444
160	431	.110	.112	.506	-.545
160	432	.012	.081	.321	-.308
160	433	-.102	.055	.156	-.304
160	434	-.271	.047	-.038	-.459
160	435	.011	.274	.765	-.954
160	436	.042	.259	.640	-.845
160	437	.113	.129	.499	-.656
160	438	-.068	.082	.231	-.420
160	439	-.139	.052	.102	-.291
160	440	-.213	.047	-.027	-.403
160	441	-.017	.245	.658	-.799
160	442	-.054	.245	.537	-1.033
160	443	.054	.120	.485	-.688
160	444	-.025	.082	.361	-.315
160	445	-.139	.058	.226	-.311
160	446	-.297	.055	.012	-.488
160	447	-.003	.224	.842	-.834
160	448	.012	.181	.683	-.920
160	449	.041	.097	.538	-.575

WD	TAP	CPMEAN	CPRMS	CPMAX	CPMIN
160	450	-.125	.070	.214	-.401
160	451	-.180	.060	.045	-.409
160	452	-.257	.053	-.117	-.479
160	453	-.112	.117	.316	-.903
160	454	-.174	.101	.162	-.831
160	455	-.073	.048	.118	-.378
160	456	-.130	.041	.015	-.288
160	457	-.172	.049	-.003	-.362
160	458	-.339	.063	-.158	-.630
160	459	-.068	.105	.193	-.795
160	460	-.214	.080	.062	-1.008
160	461	-.295	.132	.011	-.951
160	462	-.179	.055	.004	-.501
160	463	-.076	.109	.472	-.617
160	464	-.199	.087	.095	-.646
160	465	.186	.088	.591	-.196
160	466	-.385	.106	-.101	-.914
160	467	.207	.095	.662	.005
160	468	.048	.072	.396	-.364
160	469	-.296	.112	.044	-.863
160	470	-.165	.080	.277	-.586
160	471	-.348	.132	.270	-.863
160	472	-.423	.107	-.152	-1.123
160	501	-.410	.122	-.107	-1.265
160	502	-.422	.112	-.184	-1.019
160	503	-.508	.097	-.269	-1.057
160	504	-.139	.097	.224	-.813
160	505	-.308	.083	-.018	-.733
160	506	-.132	.054	.045	-.457
160	507	-.263	.056	-.096	-.574
160	508	-.346	.081	-.155	-.787
160	509	-.124	.049	.035	-.470
160	510	-.159	.048	-.033	-.390
160	9124	-.480	.086	-.250	-1.017
160	9140	-.377	.088	-.169	-.844
160	9213	-.413	.087	-.194	-1.124
160	9218	-.336	.053	-.165	-.572
160	9317	-.193	.077	.176	-.480
160	9322	.398	.174	.880	-.209
160	9348	-.150	.051	.085	-.378
160	9355	.108	.100	.526	-.380
170	101	-.304	.083	-.058	-.700
170	102	-.279	.071	-.067	-.644
170	103	-.321	.056	-.159	-.596
170	104	-.285	.064	-.102	-.613
170	105	-.308	.070	-.067	-.598
170	106	-.234	.047	-.081	-.382
170	107	-.323	.050	-.156	-.508
170	108	-.235	.048	-.053	-.400
170	109	-.239	.051	-.095	-.444

WD	TAP	CPMEAN	CPRMS	CPMAX	CPMIN
170	110	-.247	.049	-.120	-.463
170	111	-.298	.051	-.142	-.499
170	112	-.244	.048	-.100	-.433
170	113	-.263	.047	-.131	-.512
170	114	-.269	.047	-.132	-.461
170	115	-.357	.054	-.194	-.603
170	116	-.318	.059	-.154	-.577
170	117	-.271	.048	-.131	-.589
170	118	-.259	.047	-.111	-.513
170	119	-.331	.047	-.185	-.520
170	120	-.291	.046	-.147	-.478
170	121	-.327	.066	-.085	-.714
170	122	-.333	.076	-.127	-.730
170	123	-.380	.072	-.213	-.877
170	124	-.338	.086	-.152	-.953
170	125	-.248	.052	-.092	-.675
170	126	-.237	.050	-.083	-.443
170	127	-.314	.051	-.173	-.593
170	128	-.283	.050	-.142	-.528
170	129	-.318	.058	-.158	-.577
170	130	-.312	.064	-.141	-.601
170	131	-.403	.082	-.152	-.811
170	132	-.334	.070	-.135	-.646
170	133	-.301	.051	-.163	-.489
170	134	-.288	.053	-.144	-.473
170	135	-.371	.068	-.170	-.671
170	136	-.303	.090	.014	-.764
170	137	-.311	.081	-.047	-.952
170	138	-.290	.106	.013	-1.319
170	139	-.359	.113	-.071	-1.451
170	140	-.279	.067	-.074	-.672
170	141	-.281	.074	-.054	-.759
170	142	-.281	.075	-.081	-.774
170	143	-.370	.080	-.180	-.796
170	144	-.306	.068	-.119	-.625
170	145	-.294	.063	-.110	-.609
170	146	-.276	.089	-.053	-1.178
170	147	-.351	.098	-.102	-1.066
170	148	-.318	.086	-.081	-.724
170	149	-.321	.090	-.092	-.949
170	150	-.323	.098	-.085	-.912
170	151	-.391	.093	-.161	-.829
170	152	-.291	.088	-.024	-.655
170	153	-.255	.084	-.033	-.689
170	154	-.217	.080	.010	-.606
170	155	-.287	.089	-.043	-.851
170	156	-.321	.086	-.135	-.719
170	157	-.327	.088	-.144	-.875
170	158	-.330	.105	-.144	-1.031
170	159	-.389	.108	-.142	-.907

APPENDIX A -- PRESSURE DATA: CONFIGURATION A: 1221 BRICKELL BUILDING

WD	TAP	CPMEAN	CPRMS	CPMAX	CPMIN
170	160	-.307	.082	-.116	-.826
170	161	-.301	.092	-.024	-.745
170	162	-.258	.113	.097	-.756
170	163	-.228	.104	.061	-.841
170	164	-.153	.086	.101	-.558
170	165	-.187	.100	.123	-.598
170	166	-.316	.082	-.078	-.681
170	167	-.354	.078	-.130	-.697
170	168	-.354	.108	-.067	-.759
170	169	-.335	.114	-.051	-.838
170	170	-.325	.097	-.056	-.991
170	171	-.334	.100	-.073	-1.224
170	172	-.279	.092	-.021	-1.304
170	173	-.276	.091	-.030	-1.207
170	174	-.319	.109	.017	-1.131
170	201	-.344	.142	.055	-1.190
170	202	-.394	.115	.033	-.948
170	203	-.326	.097	-.036	-.932
170	204	-.338	.083	-.129	-.924
170	205	-.315	.069	-.137	-.851
170	206	-.381	.072	-.194	-.900
170	207	-.368	.133	-.043	-1.178
170	208	-.381	.102	-.104	-1.170
170	209	-.357	.078	-.121	-.779
170	210	-.389	.066	-.213	-.676
170	211	-.341	.060	-.174	-.586
170	212	-.340	.059	-.159	-.621
170	213	-.391	.091	-.158	-1.006
170	214	-.430	.088	-.201	-1.065
170	215	-.370	.069	-.177	-.725
170	216	-.363	.061	-.114	-.644
170	217	-.351	.058	-.133	-.603
170	218	-.391	.059	-.169	-.649
170	219	-.440	.120	-.184	-1.165
170	220	-.421	.097	-.149	-1.123
170	221	-.406	.083	-.190	-1.082
170	222	-.435	.084	-.210	-1.119
170	223	-.378	.075	-.120	-.874
170	224	-.384	.079	-.140	-.789
170	225	-.397	.097	-.160	-1.067
170	226	-.444	.099	-.122	-1.023
170	227	-.427	.114	-.050	-1.093
170	228	-.440	.109	-.128	-.997
170	229	-.500	.151	-.200	-1.448
170	230	-.552	.160	-.240	-1.773
170	231	-.425	.101	-.097	-.988
170	232	-.432	.117	-.144	-1.092
170	233	-.440	.128	-.087	-1.094
170	234	-.485	.136	-.152	-1.161
170	235	-.485	.203	-.038	-2.185
170	236	-.410	.116	-.040	-1.047
170	237	-.407	.120	-.035	-1.190
170	238	-.464	.138	-.081	-1.200
170	239	-.433	.148	-.063	-1.356
170	240	-.442	.151	.002	-1.613
170	241	-.384	.140	.078	-1.241
170	242	-.432	.147	.064	-1.210
170	243	-.398	.141	.009	-1.242
170	244	-.409	.140	.050	-1.054
170	245	-.470	.192	-.077	-1.669
170	246	-.376	.124	-.054	-1.276
170	247	-.331	.113	.047	-1.142
170	248	-.354	.123	-.002	-1.275
170	249	-.347	.111	-.050	-.807
170	250	-.373	.101	-.103	-.749
170	251	-.326	.094	-.070	-.668
170	252	-.350	.124	.002	-1.012
170	253	-.334	.116	.019	-.915
170	254	-.260	.104	.059	-.822
170	255	-.317	.092	-.050	-.825
170	256	-.289	.076	-.064	-.625
170	257	-.279	.076	-.062	-.632
170	258	-.410	.166	-.054	-1.479
170	259	-.359	.143	.017	-1.539
170	260	-.360	.121	.019	-1.189
170	261	-.293	.101	-.025	-.910
170	262	-.304	.089	-.071	-.727
170	263	-.258	.077	-.087	-.651
170	264	-.343	.230	.156	-2.194
170	265	-.317	.198	.127	-1.566
170	266	-.326	.142	.059	-1.219
170	267	-.287	.121	-.043	-1.172
170	268	-.280	.118	-.047	-1.284
170	269	-.266	.115	.004	-1.273
170	270	-.379	.124	-.093	-1.126
170	271	-.370	.115	.007	-1.036
170	272	-.411	.126	-.115	-1.261
170	273	-.408	.119	-.133	-1.134
170	274	-.348	.123	.064	-1.146
170	275	-.353	.107	-.043	-1.024
170	276	-.362	.114	.083	-.996
170	277	-.422	.136	-.092	-2.077
170	278	-.412	.128	-.069	-1.611
170	279	-.418	.137	-.071	-1.907
170	280	-.383	.109	-.090	-1.097
170	281	-.418	.138	-.097	-1.754
170	282	-.370	.111	.010	-.944
170	283	-.374	.111	-.083	-.878
170	284	-.381	.129	.098	-1.060
170	285	-.466	.189	.057	-1.638
170	301	.072	.111	.652	-.289
170	302	.176	.121	.610	-.231
170	303	.093	.096	.438	-.253
170	304	.246	.123	.638	-.175
170	305	.189	.132	.634	-.477
170	306	.381	.147	.883	-.040
170	307	.220	.139	.675	-.379
170	308	.456	.184	.976	-.123
170	309	.216	.153	.666	-.406
170	310	.233	.153	.704	-.430
170	311	.002	.081	.344	-.263
170	312	.162	.106	.589	-.195
170	313	.333	.146	.779	-.166
170	314	.464	.167	1.020	-.100
170	315	.491	.174	.990	-.042
170	316	.372	.170	.861	-.285
170	317	-.070	.073	.215	-.416
170	318	.082	.088	.417	-.211
170	319	.285	.126	.753	-.089
170	320	.424	.160	1.000	.006
170	321	.404	.169	1.005	-.048
170	322	.315	.159	.841	-.156
170	323	-.078	.075	.171	-.534
170	324	.074	.086	.382	-.297
170	325	-.014	.079	.283	-.298
170	326	.109	.089	.472	-.182
170	327	.255	.122	.748	-.064
170	328	.365	.147	.897	-.025
170	329	.340	.158	.902	-.043
170	330	.263	.147	.786	-.156
170	331	-.099	.098	.228	-.609
170	332	-.025	.124	.503	-.408
170	333	.049	.102	.463	-.446
170	334	.143	.095	.550	-.146
170	335	.162	.100	.699	-.101
170	336	-.163	.074	.125	-.503
170	337	-.199	.075	.113	-.592
170	338	.025	.076	.407	-.286
170	339	-.217	.083	.085	-.547
170	340	-.137	.060	.104	-.367
170	341	-.066	.063	.218	-.266
170	342	.058	.075	.399	-.148
170	343	.143	.089	.511	-.118
170	344	.227	.111	.688	-.079
170	345	.278	.134	.794	-.035
170	346	.277	.141	.848	-.063
170	347	.208	.139	.942	-.225
170	348	-.149	.055	.027	-.388
170	349	-.088	.049	.168	-.286
170	350	.018	.057	.347	-.159

APPENDIX A -- PRESSURE DATA: CONFIGURATION A: 1221 BRICKELL BUILDING

WD	TAP	CPMEAN	CPRMS	CPMAX	CPMIN
170	351	.086	.076	.431	-.086
170	352	.139	.096	.542	-.071
170	353	.165	.116	.659	-.080
170	354	.173	.124	.747	-.141
170	355	.131	.124	.704	-.200
170	356	.138	.109	.611	-.128
170	357	.085	.101	.606	-.206
170	358	.039	.078	.412	-.219
170	359	.142	.073	.516	-.047
170	360	-.120	.057	.086	-.395
170	361	-.061	.051	.233	-.266
170	362	.057	.058	.454	-.135
170	363	.114	.076	.524	-.049
170	364	.158	.106	.822	-.107
170	365	.069	.083	.451	-.161
170	366	.105	.106	.560	-.348
170	367	.089	.086	.469	-.247
170	368	.226	.106	.760	-.017
170	369	.138	.109	.699	-.191
170	370	.155	.105	.605	-.133
170	371	.124	.101	.650	-.310
170	372	-.139	.060	.231	-.412
170	373	-.073	.060	.261	-.320
170	374	-.060	.058	.233	-.312
170	401	-.406	.142	.002	-1.022
170	402	-.373	.115	.013	-.926
170	403	-.304	.095	-.014	-.779
170	404	-.289	.078	.007	-.737
170	405	-.231	.069	.005	-.602
170	406	-.444	.144	.028	-1.558
170	407	-.225	.062	.044	-.597
170	408	-.519	.132	-.163	-1.326
170	409	-.398	.137	.005	-.930
170	410	-.303	.116	.100	-.772
170	411	-.234	.082	-.020	-.642
170	412	-.275	.059	-.083	-.597
170	413	-.549	.115	-.208	-.964
170	414	-.512	.181	.030	-1.146
170	415	-.237	.153	.127	-.812
170	416	-.175	.068	.030	-.619
170	417	-.227	.044	-.045	-.405
170	418	-.903	.302	.134	-2.179
170	419	-.207	.183	.150	-1.224
170	420	-.185	.096	.057	-.822
170	421	-.202	.084	.007	-.540
170	422	-.250	.059	-.049	-.512
170	423	-.619	.211	.072	-1.537
170	424	-.449	.272	.373	-1.425
170	425	-.106	.167	.204	-1.235
170	426	-.104	.056	.107	-.467

WD	TAP	CPMEAN	CPRMS	CPMAX	CPMIN
170	427	-.170	.041	.025	-.408
170	428	-.202	.043	-.034	-.378
170	429	-.393	.192	.380	-1.219
170	430	-.466	.198	.350	-1.587
170	431	-.097	.173	.226	-.960
170	432	-.081	.062	.118	-.556
170	433	-.158	.043	-.001	-.376
170	434	-.197	.041	-.048	-.350
170	435	-.307	.203	.500	-1.175
170	436	-.277	.239	.447	-1.243
170	437	-.105	.168	.301	-.936
170	438	-.097	.064	.156	-.591
170	439	-.177	.041	.006	-.399
170	440	-.211	.038	-.064	-.398
170	441	-.215	.190	.531	-1.023
170	442	-.165	.202	.442	-1.235
170	443	-.069	.113	.261	-.844
170	444	-.098	.053	.136	-.513
170	445	-.172	.039	.008	-.340
170	446	-.205	.040	-.039	-.375
170	447	-.154	.157	.512	-.965
170	448	-.102	.156	.339	-.806
170	449	-.054	.083	.239	-.552
170	450	-.100	.047	.079	-.373
170	451	-.179	.045	.003	-.399
170	452	-.223	.047	-.080	-.364
170	453	-.168	.087	.112	-.588
170	454	-.133	.078	.085	-.488
170	455	-.085	.037	.077	-.309
170	456	-.125	.033	.005	-.258
170	457	-.180	.039	-.060	-.376
170	458	-.233	.050	-.094	-.511
170	459	-.089	.087	.173	-.641
170	460	-.209	.063	.071	-.583
170	461	-.274	.117	-.019	-.907
170	462	-.167	.043	-.032	-.380
170	463	-.033	.086	.362	-.436
170	464	-.184	.064	.034	-.489
170	465	.191	.102	.757	-.423
170	466	-.341	.121	-.043	-1.068
170	467	.216	.109	.799	-.034
170	468	.004	.064	.325	-.352
170	469	-.283	.082	-.053	-.727
170	470	-.189	.059	.018	-.580
170	471	-.239	.078	.079	-.547
170	472	-.334	.102	-.103	-.808
170	501	-.415	.144	-.108	-1.423
170	502	-.409	.117	-.116	-1.066
170	503	-.368	.100	-.046	-.931
170	504	-.131	.080	.157	-.484

WD	TAP	CPMEAN	CPRMS	CPMAX	CPMIN
170	505	-.270	.072	-.082	-.655
170	506	-.143	.044	.001	-.352
170	507	-.161	.046	-.010	-.386
170	508	-.296	.082	-.115	-.728
170	509	-.119	.037	-.008	-.281
170	510	-.152	.039	-.027	-.319
170	9124	-.355	.089	-.139	-.890
170	9140	-.286	.071	-.070	-.709
170	9213	-.386	.111	-.114	-1.108
170	9218	-.325	.063	-.133	-.748
170	9317	-.100	.075	.215	-.364
170	9322	.211	.162	.801	-.285
170	9348	-.130	.042	.084	-.305
170	9355	.087	.106	.576	-.180
180	101	-.292	.098	.042	-.763
180	102	-.274	.085	.013	-.763
180	103	-.285	.066	-.046	-.572
180	104	-.281	.074	-.021	-.565
180	105	-.290	.078	-.039	-.639
180	106	-.230	.057	-.068	-.444
180	107	-.283	.057	-.105	-.542
180	108	-.231	.057	-.059	-.491
180	109	-.231	.059	-.044	-.468
180	110	-.236	.051	-.080	-.449
180	111	-.264	.059	-.064	-.634
180	112	-.248	.056	-.076	-.550
180	113	-.245	.053	-.098	-.479
180	114	-.253	.050	-.096	-.465
180	115	-.301	.055	-.112	-.528
180	116	-.302	.062	-.088	-.546
180	117	-.267	.073	-.028	-.799
180	118	-.258	.066	-.061	-.598
180	119	-.292	.057	-.119	-.519
180	120	-.281	.049	-.097	-.456
180	121	-.308	.064	-.111	-.698
180	122	-.330	.080	-.127	-.773
180	123	-.314	.060	-.119	-.593
180	124	-.309	.071	-.107	-.892
180	125	-.261	.079	-.003	-.869
180	126	-.256	.073	.004	-.929
180	127	-.302	.070	-.154	-.742
180	128	-.288	.058	-.145	-.588
180	129	-.288	.059	-.134	-.571
180	130	-.290	.066	-.103	-.544
180	131	-.345	.093	-.069	-.696
180	132	-.308	.072	-.097	-.567
180	133	-.267	.057	-.125	-.488
180	134	-.260	.059	-.103	-.479
180	135	-.289	.070	-.082	-.627
180	136	-.236	.087	.071	-.695

APPENDIX A -- PRESSURE DATA: CONFIGURATION A: 1221 BRICKELL BUILDING

WD	TAP	CPMEAN	CPRMS	CPMAX	CPMIN
180	137	-.215	.060	-.010	-.535
180	138	-.186	.076	.079	-.602
180	139	-.217	.079	.053	-.772
180	140	-.280	.091	-.081	-.769
180	141	-.279	.095	-.055	-1.115
180	142	-.301	.096	-.036	-1.052
180	143	-.272	.061	-.080	-.567
180	144	-.222	.049	-.069	-.411
180	145	-.221	.060	-.071	-.479
180	146	-.207	.072	-.015	-.579
180	147	-.240	.074	-.055	-.629
180	148	-.324	.124	-.021	-1.106
180	149	-.339	.135	.017	-1.518
180	150	-.300	.128	.083	-1.034
180	151	-.236	.082	.016	-.623
180	152	-.189	.052	.111	-.437
180	153	-.202	.058	-.060	-.470
180	154	-.201	.068	-.047	-.458
180	155	-.238	.078	-.043	-.544
180	156	-.339	.098	-.085	-.890
180	157	-.340	.102	-.078	-.871
180	158	-.346	.130	.030	-.948
180	159	-.220	.090	.081	-.600
180	160	-.297	.090	-.038	-.774
180	161	-.192	.074	.062	-.585
180	162	-.142	.069	.128	-.441
180	163	-.184	.074	.097	-.662
180	164	-.176	.071	.040	-.603
180	165	-.170	.069	.055	-.565
180	166	-.219	.073	.041	-.537
180	167	-.235	.067	-.046	-.519
180	168	-.214	.070	.073	-.550
180	169	-.209	.059	.001	-.511
180	170	-.303	.113	.012	-1.028
180	171	-.373	.129	-.036	-1.438
180	172	-.217	.073	-.000	-.765
180	173	-.213	.074	-.009	-.875
180	174	-.271	.091	-.013	-1.299
180	201	-.332	.141	.046	-1.057
180	202	-.354	.123	.049	-.958
180	203	-.354	.123	-.010	-.944
180	204	-.352	.099	-.087	-.991
180	205	-.339	.078	-.150	-.845
180	206	-.367	.078	-.174	-.871
180	207	-.356	.130	.164	-1.039
180	208	-.340	.112	.098	-1.087
180	209	-.340	.103	.031	-1.110
180	210	-.337	.086	-.090	-1.107
180	211	-.320	.070	-.147	-.808
180	212	-.318	.071	-.103	-.744
180	213	-.397	.137	-.040	-1.085
180	214	-.387	.119	.010	-.971
180	215	-.350	.088	-.080	-.831
180	216	-.328	.080	-.096	-1.070
180	217	-.316	.072	-.098	-1.101
180	218	-.313	.071	-.101	-1.056
180	219	-.459	.158	-.040	-1.308
180	220	-.439	.141	-.085	-1.096
180	221	-.424	.128	-.035	-1.145
180	222	-.405	.110	-.099	-.985
180	223	-.378	.099	-.068	-.857
180	224	-.375	.097	-.092	-.797
180	225	-.376	.134	-.008	-1.048
180	226	-.386	.137	.023	-1.082
180	227	-.436	.135	-.038	-1.194
180	228	-.436	.121	-.089	-1.039
180	229	-.432	.149	.006	-1.320
180	230	-.479	.180	-.017	-1.482
180	231	-.357	.131	.048	-1.106
180	232	-.404	.142	-.001	-1.424
180	233	-.434	.146	-.005	-1.537
180	234	-.430	.128	-.081	-1.047
180	235	-.699	.320	.027	-2.524
180	236	-.260	.115	.041	-1.037
180	237	-.318	.120	.071	-1.048
180	238	-.346	.118	.003	-.991
180	239	-.373	.128	.001	-1.009
180	240	-.562	.215	-.065	-1.502
180	241	-.207	.089	.082	-.750
180	242	-.259	.093	.005	-.823
180	243	-.292	.100	.034	-.755
180	244	-.377	.131	.007	-1.076
180	245	-.426	.133	-.070	-1.350
180	246	-.240	.109	.050	-.889
180	247	-.252	.112	.061	-.864
180	248	-.312	.132	.056	-.962
180	249	-.352	.118	.029	-1.016
180	250	-.360	.109	-.008	-.931
180	251	-.348	.104	-.022	-.857
180	252	-.235	.113	.034	-1.134
180	253	-.232	.103	.036	-.746
180	254	-.270	.108	.046	-.790
180	255	-.341	.108	.015	-.750
180	256	-.321	.105	-.019	-.900
180	257	-.317	.105	-.035	-1.082
180	258	-.259	.131	.012	-.847
180	259	-.247	.120	.068	-.884
180	260	-.267	.095	.047	-.709
180	261	-.288	.093	-.017	-.762
180	262	-.281	.085	-.015	-.800
180	263	-.268	.073	-.029	-.653
180	264	-.191	.128	.146	-1.239
180	265	-.180	.113	.131	-1.122
180	266	-.214	.106	.121	-.980
180	267	-.258	.113	.096	-1.120
180	268	-.258	.106	-.004	-.982
180	269	-.252	.104	.011	-.990
180	270	-.411	.155	-.075	-1.395
180	271	-.397	.127	-.034	-1.019
180	272	-.432	.130	-.126	-1.811
180	273	-.476	.131	-.177	-1.724
180	274	-.370	.152	.038	-1.351
180	275	-.363	.118	-.010	-.910
180	276	-.380	.120	-.064	-.930
180	277	-.491	.138	-.050	-1.600
180	278	-.428	.135	-.015	-1.852
180	279	-.415	.136	-.117	-1.503
180	280	-.381	.118	.012	-1.071
180	281	-.473	.142	-.139	-1.295
180	282	-.327	.135	.074	-1.231
180	283	-.354	.129	-.001	-.920
180	284	-.418	.152	-.019	-1.286
180	285	-.797	.324	-.096	-2.651
180	301	.155	.117	.567	-.292
180	302	.214	.126	.651	-.241
180	303	.206	.113	.554	-.149
180	304	.343	.138	.721	-.061
180	305	.195	.127	.658	-.232
180	306	.443	.158	.873	-.029
180	307	.165	.126	.651	-.354
180	308	.433	.166	.986	-.031
180	309	.144	.132	.607	-.316
180	310	.109	.130	.524	-.362
180	311	.132	.102	.457	-.156
180	312	.297	.128	.716	-.054
180	313	.445	.153	.884	.010
180	314	.491	.161	.975	.020
180	315	.382	.156	.906	-.114
180	316	.216	.148	.704	-.219
180	317	-.012	.105	.368	-.323
180	318	.162	.117	.554	-.176
180	319	.318	.134	.863	-.030
180	320	.381	.145	.863	-.009
180	321	.257	.144	.798	-.154
180	322	.143	.126	.625	-.256
180	323	-.026	.090	.409	-.355
180	324	.107	.102	.590	-.163
180	325	-.008	.094	.434	-.283
180	326	.117	.101	.596	-.121
180	327	.221	.125	.695	-.084

APPENDIX A -- PRESSURE DATA: CONFIGURATION A; 1221 BRICKELL BUILDING

WD	TAP	CPMEAN	CPRMS	CPMAX	CPMIN
180	328	.259	.124	.716	-.039
180	329	.143	.125	.737	-.311
180	330	.058	.111	.587	-.339
180	331	-.085	.103	.388	-.477
180	332	.143	.162	.765	-.284
180	333	.054	.112	.539	-.370
180	334	.156	.103	.585	-.107
180	335	.157	.106	.680	-.136
180	336	-.104	.086	.315	-.589
180	337	-.147	.080	.309	-.485
180	338	.053	.084	.537	-.178
180	339	-.130	.080	.273	-.527
180	340	-.088	.070	.411	-.410
180	341	-.058	.074	.431	-.349
180	342	.062	.077	.445	-.147
180	343	.110	.089	.531	-.104
180	344	.158	.100	.602	-.132
180	345	.123	.108	.568	-.170
180	346	.095	.097	.551	-.171
180	347	.009	.087	.467	-.323
180	348	-.111	.052	.192	-.379
180	349	-.095	.046	.140	-.283
180	350	.014	.049	.234	-.128
180	351	.057	.061	.318	-.131
180	352	.087	.073	.425	-.165
180	353	.043	.082	.511	-.224
180	354	.040	.075	.492	-.199
180	355	-.026	.065	.289	-.323
180	356	.043	.062	.341	-.146
180	357	-.046	.057	.227	-.259
180	358	-.017	.053	.253	-.226
180	359	.092	.071	.451	-.068
180	360	-.073	.047	.124	-.354
180	361	-.053	.047	.213	-.217
180	362	.068	.062	.447	-.067
180	363	.146	.077	.471	-.044
180	364	.152	.084	.513	-.051
180	365	.009	.061	.279	-.175
180	366	-.011	.085	.303	-.363
180	367	.008	.058	.268	-.222
180	368	.178	.096	.686	-.025
180	369	.048	.123	.556	-.349
180	370	.044	.072	.456	-.189
180	371	-.016	.069	.290	-.264
180	372	-.091	.087	.346	-.444
180	373	.046	.100	.553	-.252
180	374	.062	.098	.593	-.222
180	401	-.680	.205	-.137	-1.503
180	402	-.394	.136	-.012	-.965
180	403	-.275	.107	.029	-.843

WD	TAP	CPMEAN	CPRMS	CPMAX	CPMIN
180	404	-.286	.091	.006	-.696
180	405	-.233	.083	.062	-.644
180	406	-.747	.213	-.167	-2.030
180	407	-.231	.078	.021	-.742
180	408	-.713	.194	-.161	-1.598
180	409	-.535	.164	-.022	-1.130
180	410	-.327	.129	.104	-.811
180	411	-.217	.095	.050	-.727
180	412	-.263	.074	-.017	-.642
180	413	-.562	.124	-.157	-1.244
180	414	-.577	.162	.058	-1.266
180	415	-.407	.167	.105	-.992
180	416	-.302	.126	.199	-.839
180	417	-.203	.073	.094	-.541
180	418	-.709	.184	-.204	-1.618
180	419	-.549	.228	.036	-1.190
180	420	-.352	.194	.048	-1.204
180	421	-.196	.112	.146	-.806
180	422	-.182	.061	.027	-.622
180	423	-.644	.178	-.190	-1.552
180	424	-.705	.165	-.239	-1.371
180	425	-.472	.251	.119	-1.266
180	426	-.170	.133	.147	-1.181
180	427	-.165	.069	.137	-.701
180	428	-.225	.068	.032	-.738
180	429	-.699	.155	-.262	-1.263
180	430	-.638	.157	-.176	-1.441
180	431	-.634	.223	.152	-1.341
180	432	-.270	.185	.136	-.943
180	433	-.216	.095	.073	-.772
180	434	-.254	.078	.005	-.937
180	435	-.616	.171	.004	-1.297
180	436	-.625	.163	.055	-1.388
180	437	-.587	.231	.145	-1.404
180	438	-.361	.219	.062	-1.164
180	439	-.269	.130	.092	-.959
180	440	-.280	.129	.115	-1.142
180	441	-.606	.181	-.052	-1.657
180	442	-.648	.197	.036	-1.748
180	443	-.554	.240	.057	-1.567
180	444	-.285	.174	.117	-1.098
180	445	-.244	.107	.128	-.839
180	446	-.276	.098	.081	-1.003
180	447	-.536	.191	-.103	-1.487
180	448	-.553	.201	.025	-1.719
180	449	-.429	.223	.090	-1.705
180	450	-.279	.139	.209	-.968
180	451	-.252	.090	.004	-.786
180	452	-.262	.082	-.017	-.793
180	453	-.532	.260	-.057	-2.052

WD	TAP	CPMEAN	CPRMS	CPMAX	CPMIN
180	454	-.473	.198	-.042	-1.424
180	455	-.247	.126	.077	-.976
180	456	-.184	.059	.022	-.596
180	457	-.235	.064	-.028	-.519
180	458	-.302	.074	-.035	-.603
180	459	-.225	.090	.050	-.627
180	460	-.284	.104	-.029	-.780
180	461	-.339	.151	-.024	-1.091
180	462	-.190	.062	.011	-.461
180	463	-.236	.115	.227	-.863
180	464	-.207	.072	.006	-.563
180	465	.064	.117	.607	-.818
180	466	-.241	.074	.078	-.624
180	467	.162	.091	.693	-.112
180	468	-.089	.140	.449	-.903
180	469	-.352	.129	.008	-.922
180	470	-.219	.082	.018	-.560
180	471	-.230	.074	.003	-.610
180	472	-.253	.081	.106	-.616
180	501	-.446	.181	.084	-1.725
180	502	-.443	.120	-.124	-1.106
180	503	-.456	.134	.010	-1.157
180	504	-.218	.125	.152	-.774
180	505	-.233	.081	.048	-.605
180	506	-.203	.090	.047	-.709
180	507	-.206	.061	-.004	-.485
180	508	-.253	.091	.092	-.672
180	509	-.235	.086	-.015	-.649
180	510	-.161	.053	.011	-.389
180	9124	-.367	.075	-.078	-.977
180	9140	-.285	.100	-.052	-1.103
180	9213	-.388	.124	-.105	-1.272
180	9218	-.317	.064	-.122	-.581
180	9317	.050	.097	.386	-.236
180	9322	.203	.135	.734	-.215
180	9348	-.121	.059	.339	-.394
180	9355	-.011	.091	.595	-.302
190	101	-.306	.104	-.005	-.785
190	102	-.293	.100	.037	-.792
190	103	-.311	.095	-.066	-.786
190	104	-.299	.092	-.038	-.890
190	105	-.298	.094	-.046	-.785
190	106	-.284	.101	-.010	-.691
190	107	-.301	.079	-.110	-.717
190	108	-.293	.111	.057	-.804
190	109	-.298	.118	.049	-.905
190	110	-.279	.086	-.042	-.713
190	111	-.324	.117	.000	-1.050
190	112	-.297	.104	-.045	-.916
190	113	-.288	.080	-.060	-.722

APPENDIX A -- PRESSURE DATA: CONFIGURATION A: 1221 BRICKELL BUILDING

WD	TAP	CPMEAN	CPRMS	CPMAX	CPMIN
190	114	-.283	.068	-.118	-.698
190	115	-.331	.089	-.059	-1.013
190	116	-.341	.105	-.043	-1.570
190	117	-.320	.118	.022	-.851
190	118	-.294	.097	.004	-.799
190	119	-.301	.070	-.098	-.655
190	120	-.296	.063	-.114	-.576
190	121	-.340	.097	-.028	-.975
190	122	-.366	.120	-.024	-1.110
190	123	-.328	.074	-.082	-.744
190	124	-.346	.107	-.102	-1.061
190	125	-.298	.113	.013	-.865
190	126	-.283	.096	-.012	-.745
190	127	-.305	.078	-.105	-.719
190	128	-.277	.058	-.114	-.585
190	129	-.267	.060	-.100	-.564
190	130	-.264	.066	-.078	-.593
190	131	-.272	.083	-.011	-.724
190	132	-.255	.070	-.055	-.619
190	133	-.243	.053	-.085	-.494
190	134	-.233	.055	-.033	-.513
190	135	-.245	.060	-.011	-.544
190	136	-.191	.056	.052	-.478
190	137	-.189	.043	-.039	-.424
190	138	-.166	.046	-.003	-.457
190	139	-.193	.046	-.034	-.508
190	140	-.316	.103	-.088	-.978
190	141	-.308	.095	-.064	-.828
190	142	-.312	.094	.006	-.789
190	143	-.251	.053	-.057	-.595
190	144	-.207	.040	-.055	-.400
190	145	-.187	.040	-.062	-.354
190	146	-.171	.044	-.024	-.450
190	147	-.196	.043	-.036	-.466
190	148	-.343	.121	-.105	-1.082
190	149	-.373	.131	-.071	-1.138
190	150	-.261	.108	.112	-.913
190	151	-.213	.047	-.020	-.429
190	152	-.205	.041	-.031	-.450
190	153	-.192	.038	-.080	-.417
190	154	-.175	.045	-.003	-.654
190	155	-.200	.051	.026	-.790
190	156	-.347	.109	-.038	-1.049
190	157	-.339	.110	-.037	-1.036
190	158	-.285	.084	.004	-.705
190	159	-.238	.054	.030	-.455
190	160	-.275	.074	.031	-.688
190	161	-.202	.053	.013	-.571
190	162	-.183	.045	-.036	-.464
190	163	-.209	.043	-.048	-.487
190	164	-.188	.041	-.076	-.428
190	165	-.186	.045	-.071	-.589
190	166	-.225	.053	-.029	-.525
190	167	-.233	.045	-.057	-.418
190	168	-.219	.050	-.033	-.481
190	169	-.213	.049	-.026	-.483
190	170	-.315	.108	-.047	-1.027
190	171	-.376	.128	-.066	-1.388
190	172	-.173	.042	-.031	-.397
190	173	-.165	.042	-.037	-.411
190	174	-.225	.047	-.064	-.631
190	201	-.311	.131	.039	-1.061
190	202	-.352	.139	.092	-.976
190	203	-.423	.154	.012	-1.151
190	204	-.511	.144	-.130	-1.190
190	205	-.502	.141	-.176	-1.349
190	206	-.527	.144	-.193	-1.677
190	207	-.357	.149	.162	-1.078
190	208	-.343	.144	.177	-1.009
190	209	-.446	.166	.103	-1.167
190	210	-.562	.166	-.109	-1.490
190	211	-.507	.152	-.156	-1.330
190	212	-.498	.138	-.178	-1.371
190	213	-.475	.233	.153	-1.761
190	214	-.481	.200	.215	-1.411
190	215	-.475	.165	.126	-1.263
190	216	-.491	.140	-.129	-1.556
190	217	-.456	.123	-.155	-1.144
190	218	-.467	.123	-.170	-1.148
190	219	-.480	.223	.101	-1.850
190	220	-.443	.184	.102	-1.168
190	221	-.500	.179	-.001	-1.285
190	222	-.575	.166	-.138	-1.604
190	223	-.531	.149	-.154	-1.201
190	224	-.520	.148	-.138	-1.450
190	225	-.276	.112	-.015	-.956
190	226	-.314	.124	.014	-1.085
190	227	-.396	.165	.045	-1.326
190	228	-.531	.175	-.063	-1.254
190	229	-.573	.210	-.028	-1.586
190	230	-.764	.367	-.073	-3.526
190	231	-.279	.108	-.001	-.984
190	232	-.340	.137	.019	-.978
190	233	-.394	.156	-.017	-1.156
190	234	-.462	.165	-.044	-1.458
190	235	-.801	.338	-.098	-2.625
190	236	-.195	.066	.094	-.647
190	237	-.235	.090	-.010	-.670
190	238	-.288	.105	.008	-.867
190	239	-.381	.162	.055	-1.048
190	240	-.629	.195	-.120	-1.549
190	241	-.158	.046	.034	-.491
190	242	-.205	.063	-.017	-.718
190	243	-.217	.090	-.015	-.826
190	244	-.344	.145	.047	-1.066
190	245	-.556	.200	-.063	-1.641
190	246	-.190	.058	.107	-.543
190	247	-.172	.068	.045	-.688
190	248	-.199	.105	.025	-.795
190	249	-.325	.148	.050	-.970
190	250	-.495	.152	-.064	-1.249
190	251	-.464	.136	-.100	-1.034
190	252	-.165	.054	.074	-.839
190	253	-.155	.062	.077	-.696
190	254	-.187	.097	.078	-.756
190	255	-.341	.149	.152	-.928
190	256	-.441	.134	-.063	-1.166
190	257	-.429	.127	-.107	-1.213
190	258	-.182	.049	.098	-.532
190	259	-.147	.056	.159	-.574
190	260	-.142	.080	.069	-.502
190	261	-.218	.138	.096	-.776
190	262	-.350	.157	.080	-1.105
190	263	-.339	.121	-.022	-1.002
190	264	-.130	.037	.025	-.383
190	265	-.103	.042	.071	-.369
190	266	-.108	.065	.176	-.523
190	267	-.142	.111	.323	-.879
190	268	-.201	.124	.098	-.958
190	269	-.186	.115	.100	-.926
190	270	-.361	.138	-.034	-1.164
190	271	-.371	.147	.028	-1.007
190	272	-.619	.234	-.118	-2.273
190	273	-.664	.239	-.142	-2.408
190	274	-.321	.134	.107	-1.250
190	275	-.314	.128	.122	-.939
190	276	-.343	.148	.088	-1.176
190	277	-.629	.221	-.165	-1.699
190	278	-.598	.240	-.106	-1.945
190	279	-.617	.311	-.088	-2.830
190	280	-.332	.138	.043	-.912
190	281	-.586	.207	-.003	-1.723
190	282	-.237	.092	.009	-.825
190	283	-.280	.109	.019	-.886
190	284	-.443	.191	.007	-1.358
190	285	-.793	.278	-.165	-2.335
190	301	.167	.122	.768	-.253
190	302	.230	.125	.834	-.248
190	303	.259	.128	.634	-.180
190	304	.406	.145	.862	-.068

APPENDIX A -- PRESSURE DATA: CONFIGURATION A: 1221 BRICKELL BUILDING

WD	TAP	CPMEAN	CPRMS	CPMAX	CPMIN
190	305	.174	.126	.615	-.273
190	306	.491	.157	1.000	-.003
190	307	.129	.118	.629	-.273
190	308	.398	.163	.883	-.059
190	309	.080	.122	.514	-.334
190	310	.041	.114	.457	-.385
190	311	.173	.111	.532	-.237
190	312	.361	.133	.807	-.056
190	313	.484	.154	.988	.005
190	314	.484	.153	1.002	-.036
190	315	.335	.147	.772	-.072
190	316	.160	.121	.531	-.237
190	317	.035	.123	.502	-.374
190	318	.229	.137	.734	-.181
190	319	.357	.152	.912	-.072
190	320	.368	.154	.919	-.055
190	321	.200	.139	.696	-.216
190	322	.074	.113	.507	-.305
190	323	.023	.122	.473	-.404
190	324	.176	.130	.699	-.156
190	325	.068	.126	.590	-.321
190	326	.191	.128	.702	-.094
190	327	.252	.128	.678	-.063
190	328	.245	.123	.693	-.078
190	329	.096	.126	.599	-.258
190	330	-.006	.110	.463	-.356
190	331	.011	.132	.502	-.464
190	332	.266	.178	.942	-.228
190	333	.153	.140	.722	-.341
190	334	.224	.124	.695	-.136
190	335	.226	.123	.805	-.076
190	336	-.014	.122	.441	-.445
190	337	-.053	.128	.432	-.527
190	338	.158	.120	.669	-.122
190	339	-.045	.122	.383	-.692
190	340	-.007	.110	.443	-.398
190	341	.036	.114	.537	-.369
190	342	.129	.098	.545	-.127
190	343	.142	.093	.566	-.061
190	344	.144	.088	.550	-.096
190	345	.074	.100	.534	-.163
190	346	.024	.098	.444	-.227
190	347	-.076	.097	.421	-.447
190	348	-.073	.078	.462	-.392
190	349	-.054	.066	.291	-.270
190	350	.035	.054	.383	-.122
190	351	.053	.053	.287	-.103
190	352	.057	.055	.305	-.106
190	353	-.005	.064	.340	-.221
190	354	-.018	.068	.393	-.305
190	355	-.091	.079	.332	-.398
190	356	.014	.058	.319	-.184
190	357	-.083	.063	.252	-.309
190	358	-.042	.049	.252	-.199
190	359	.078	.060	.450	-.081
190	360	-.016	.057	.270	-.212
190	361	.000	.059	.365	-.154
190	362	.109	.068	.580	-.071
190	363	.170	.089	.613	-.024
190	364	.155	.086	.556	-.023
190	365	.037	.069	.490	-.147
190	366	-.080	.116	.358	-.501
190	367	-.021	.061	.220	-.299
190	368	.204	.122	.785	-.041
190	369	.034	.186	.845	-.643
190	370	-.012	.068	.344	-.273
190	371	-.079	.077	.453	-.378
190	372	.021	.132	.535	-.405
190	373	.128	.132	.745	-.328
190	374	.145	.130	.747	-.271
190	401	-.671	.191	-.234	-1.760
190	402	-.556	.145	-.107	-1.181
190	403	-.440	.141	.153	-1.051
190	404	-.390	.137	.036	-1.015
190	405	-.282	.114	.100	-.836
190	406	-.727	.211	-.267	-2.319
190	407	-.275	.107	.083	-.755
190	408	-.729	.216	-.251	-2.188
190	409	-.632	.164	-.068	-1.292
190	410	-.489	.150	.013	-1.292
190	411	-.346	.134	.134	-1.033
190	412	-.315	.108	.089	-.870
190	413	-.562	.136	-.171	-1.290
190	414	-.598	.157	-.072	-1.292
190	415	-.552	.161	.033	-1.296
190	416	-.482	.156	.152	-1.205
190	417	-.318	.139	.175	-.995
190	418	-.553	.156	-.186	-1.584
190	419	-.561	.167	.012	-1.303
190	420	-.586	.193	-.017	-1.398
190	421	-.425	.182	.187	-1.273
190	422	-.319	.166	.151	-1.265
190	423	-.525	.142	-.120	-1.281
190	424	-.589	.156	-.172	-1.279
190	425	-.578	.186	.022	-1.517
190	426	-.433	.206	.240	-1.487
190	427	-.329	.177	.214	-1.232
190	428	-.344	.190	.142	-1.339
190	429	-.604	.159	-.163	-1.300
190	430	-.518	.152	-.101	-1.281
190	431	-.612	.176	-.050	-1.295
190	432	-.490	.208	.069	-1.267
190	433	-.372	.194	.217	-1.577
190	434	-.414	.226	.234	-1.769
190	435	-.565	.169	-.124	-1.324
190	436	-.569	.168	-.139	-1.401
190	437	-.596	.190	.086	-1.507
190	438	-.557	.224	.063	-1.372
190	439	-.437	.225	.243	-1.462
190	440	-.417	.241	.154	-1.724
190	441	-.606	.195	-.191	-1.495
190	442	-.660	.210	-.178	-1.937
190	443	-.588	.218	.034	-1.632
190	444	-.440	.212	.090	-1.379
190	445	-.354	.185	.079	-1.232
190	446	-.390	.199	.113	-1.694
190	447	-.577	.188	-.109	-1.432
190	448	-.579	.212	-.041	-1.693
190	449	-.478	.209	.079	-1.514
190	450	-.345	.151	.082	-1.066
190	451	-.290	.107	.004	-.849
190	452	-.297	.102	-.006	-.897
190	453	-.465	.204	-.091	-1.643
190	454	-.453	.176	-.082	-1.377
190	455	-.251	.124	.102	-1.054
190	456	-.153	.055	.039	-.565
190	457	-.173	.051	.037	-.417
190	458	-.247	.062	-.026	-.556
190	459	-.250	.100	.022	-.845
190	460	-.269	.095	-.040	-.691
190	461	-.273	.096	-.064	-.776
190	462	-.173	.042	-.040	-.414
190	463	-.255	.088	.099	-.662
190	464	-.162	.044	.004	-.350
190	465	.077	.096	.520	-.465
190	466	-.236	.051	-.022	-.533
190	467	.151	.116	.671	-.313
190	468	-.205	.143	.368	-.849
190	469	-.374	.112	-.099	-.951
190	470	-.218	.063	.032	-.536
190	471	-.245	.047	-.050	-.426
190	472	-.258	.049	-.055	-.490
190	501	-.556	.245	-.008	-1.753
190	502	-.494	.173	-.079	-1.349
190	503	-.403	.149	-.065	-1.331
190	504	-.171	.095	.309	-.783
190	505	-.227	.049	.051	-.509
190	506	-.195	.066	.018	-.557
190	507	-.214	.052	-.055	-.580
190	508	-.229	.079	.065	-.564

APPENDIX A -- PRESSURE DATA: CONFIGURATION A; 1221 BRICKELL BUILDING

WD	TAP	CPMEAN	CPRMS	CPMAX	CPMIN
190	509	-.239	.074	-.024	-.609
190	510	-.139	.042	.013	-.303
190	9124	-.408	.120	-.147	-1.449
190	9140	-.331	.116	-.038	-1.206
190	9213	-.484	.220	.114	-1.351
190	9218	-.434	.117	-.113	-.953
190	9317	.076	.124	.600	-.298
190	9322	.125	.125	.557	-.345
190	9348	-.060	.083	.320	-.333
190	9355	-.098	.089	.290	-.402
200	101	-.317	.085	-.043	-.883
200	102	-.309	.083	-.034	-.872
200	103	-.350	.084	-.045	-.782
200	104	-.322	.080	-.066	-.882
200	105	-.310	.081	-.061	-.797
200	106	-.360	.093	-.015	-.714
200	107	-.343	.076	-.089	-.690
200	108	-.379	.104	-.039	-.786
200	109	-.387	.118	-.020	-.948
200	110	-.299	.068	-.020	-.626
200	111	-.393	.105	-.054	-1.097
200	112	-.358	.087	-.108	-.818
200	113	-.340	.069	-.124	-.638
200	114	-.331	.073	-.109	-.656
200	115	-.358	.091	-.068	-.778
200	116	-.352	.100	-.044	-.921
200	117	-.374	.103	.029	-.876
200	118	-.337	.083	-.027	-.668
200	119	-.344	.067	-.158	-.626
200	120	-.358	.084	-.140	-.715
200	121	-.394	.110	-.061	-1.141
200	122	-.396	.125	-.044	-1.093
200	123	-.403	.115	-.127	-1.113
200	124	-.455	.184	-.015	-1.565
200	125	-.414	.121	-.015	-.918
200	126	-.376	.102	-.092	-.796
200	127	-.362	.078	-.146	-.709
200	128	-.320	.062	-.154	-.561
200	129	-.309	.068	-.106	-.606
200	130	-.303	.076	-.063	-.620
200	131	-.276	.073	-.033	-.558
200	132	-.273	.066	-.078	-.541
200	133	-.270	.057	-.110	-.510
200	134	-.255	.057	-.099	-.503
200	135	-.258	.059	-.080	-.558
200	136	-.222	.055	-.052	-.456
200	137	-.229	.051	-.066	-.434
200	138	-.207	.053	-.008	-.474
200	139	-.231	.052	-.045	-.465
200	140	-.452	.137	-.108	-.999
200	141	-.441	.125	-.054	-.992
200	142	-.380	.115	-.029	-.947
200	143	-.299	.062	-.075	-.560
200	144	-.272	.052	-.086	-.485
200	145	-.243	.051	-.110	-.548
200	146	-.223	.052	-.070	-.560
200	147	-.245	.050	-.106	-.546
200	148	-.430	.132	-.049	-1.041
200	149	-.436	.138	.071	-1.730
200	150	-.336	.126	.074	-.832
200	151	-.280	.064	-.045	-.529
200	152	-.291	.069	-.147	-.649
200	153	-.262	.061	-.127	-.750
200	154	-.233	.057	-.061	-.553
200	155	-.254	.060	-.073	-.598
200	156	-.408	.142	.024	-1.310
200	157	-.398	.124	.078	-.999
200	158	-.368	.112	.064	-.961
200	159	-.303	.085	-.011	-.735
200	160	-.328	.110	.061	-.806
200	161	-.265	.092	.043	-.913
200	162	-.251	.076	-.053	-.788
200	163	-.277	.089	-.125	-.948
200	164	-.248	.077	-.098	-1.026
200	165	-.243	.064	-.075	-.673
200	166	-.284	.085	.002	-.603
200	167	-.287	.073	-.033	-.555
200	168	-.279	.079	-.005	-.583
200	169	-.264	.077	.062	-.622
200	170	-.350	.117	-.002	-1.253
200	171	-.408	.132	-.019	-1.148
200	172	-.219	.051	-.068	-.436
200	173	-.212	.052	-.061	-.430
200	174	-.275	.056	-.112	-.498
200	201	-.269	.072	.026	-.726
200	202	-.280	.074	-.009	-.794
200	203	-.285	.100	.002	-.803
200	204	-.496	.181	-.061	-1.122
200	205	-.812	.238	-.217	-1.908
200	206	-.852	.266	-.305	-2.395
200	207	-.289	.075	.024	-.794
200	208	-.256	.083	.021	-.756
200	209	-.288	.134	.063	-.901
200	210	-.735	.207	.015	-1.329
200	211	-.843	.244	-.258	-1.683
200	212	-.812	.236	-.214	-1.901
200	213	-.365	.177	.126	-1.359
200	214	-.416	.171	.128	-1.184
200	215	-.500	.205	.056	-1.184
200	216	-.659	.165	.021	-1.411
200	217	-.625	.140	-.114	-1.345
200	218	-.666	.141	-.114	-1.362
200	219	-.375	.158	.042	-1.488
200	220	-.397	.174	.028	-1.073
200	221	-.491	.224	.128	-1.192
200	222	-.759	.218	.200	-1.796
200	223	-.704	.172	-.163	-1.804
200	224	-.687	.167	-.201	-1.334
200	225	-.271	.084	.027	-.696
200	226	-.318	.092	-.025	-.891
200	227	-.346	.161	.075	-1.203
200	228	-.524	.193	.053	-1.239
200	229	-.598	.222	-.001	-1.714
200	230	-1.177	.587	-.037	-3.673
200	231	-.257	.071	-.060	-.664
200	232	-.299	.125	-.029	-.912
200	233	-.356	.170	.006	-1.089
200	234	-.523	.212	-.058	-1.433
200	235	-.801	.285	-.163	-2.476
200	236	-.208	.052	-.035	-.507
200	237	-.203	.067	.098	-.640
200	238	-.277	.125	.001	-1.099
200	239	-.436	.234	.099	-1.381
200	240	-.659	.196	.087	-1.617
200	241	-.173	.043	.006	-.407
200	242	-.205	.053	.022	-.553
200	243	-.174	.089	.020	-.747
200	244	-.291	.197	.080	-1.225
200	245	-.629	.236	.016	-2.162
200	246	-.231	.051	-.058	-.525
200	247	-.177	.052	.013	-.521
200	248	-.164	.079	.042	-.616
200	249	-.268	.192	.088	-1.051
200	250	-.591	.229	.083	-1.536
200	251	-.551	.192	.009	-1.490
200	252	-.193	.048	-.008	-.418
200	253	-.158	.051	.006	-.440
200	254	-.124	.064	.084	-.532
200	255	-.332	.197	.123	-1.184
200	256	-.482	.185	.092	-1.359
200	257	-.465	.166	.056	-1.253
200	258	-.234	.053	.071	-.518
200	259	-.164	.055	.035	-.464
200	260	-.144	.077	.098	-.552
200	261	-.221	.153	.103	-.894
200	262	-.364	.177	.109	-1.308
200	263	-.332	.134	.061	-1.243
200	264	-.167	.046	-.008	-.369
200	265	-.118	.043	.086	-.280
200	266	-.108	.057	.358	-.485

APPENDIX A -- PRESSURE DATA: CONFIGURATION A; 1221 BRICKELL BUILDING

WD	TAP	CPMEAN	CPRMS	CPMAX	CPMIN
200	267	-.109	.106	.184	-.744
200	268	-.173	.120	.155	-1.028
200	269	-.151	.107	.126	-.875
200	270	-.348	.107	-.054	-.776
200	271	-.307	.101	.071	-.842
200	272	-.838	.329	.034	-2.403
200	273	-.896	.333	-.180	-2.533
200	274	-.304	.094	-.027	-.772
200	275	-.262	.086	.017	-.698
200	276	-.256	.106	.022	-.845
200	277	-.593	.258	.076	-1.734
200	278	-.684	.322	.135	-2.105
200	279	-.955	.431	-.001	-3.222
200	280	-.257	.106	.101	-.838
200	281	-.609	.228	.045	-1.445
200	282	-.216	.056	-.008	-.532
200	283	-.214	.063	-.027	-.603
200	284	-.462	.222	.091	-1.296
200	285	-.659	.226	-.005	-1.571
200	301	.214	.136	.663	-.358
200	302	.276	.134	.693	-.222
200	303	.288	.130	.717	-.196
200	304	.448	.147	.906	-.067
200	305	.179	.129	.566	-.243
200	306	.508	.159	1.011	-.001
200	307	.116	.115	.475	-.323
200	308	.364	.147	.822	-.151
200	309	.037	.114	.451	-.410
200	310	.007	.101	.384	-.402
200	311	.216	.120	.608	-.160
200	312	.420	.140	.868	.011
200	313	.511	.161	.984	.048
200	314	.466	.151	.890	-.046
200	315	.291	.132	.730	-.116
200	316	.133	.109	.476	-.255
200	317	.134	.127	.559	-.412
200	318	.338	.141	.789	-.134
200	319	.467	.159	1.013	.070
200	320	.425	.151	.916	.017
200	321	.214	.128	.643	-.203
200	322	.075	.102	.473	-.286
200	323	.144	.131	.678	-.334
200	324	.319	.141	.858	-.063
200	325	.218	.143	.782	-.220
200	326	.339	.145	.955	-.022
200	327	.390	.145	1.034	.029
200	328	.315	.124	.843	.012
200	329	.107	.111	.603	-.224
200	330	-.018	.089	.418	-.355
200	331	.138	.131	.791	-.322

WD	TAP	CPMEAN	CPRMS	CPMAX	CPMIN
200	332	.337	.163	.961	-.070
200	333	.261	.141	.871	-.111
200	334	.314	.135	.843	-.010
200	335	.339	.140	.795	-.003
200	336	.108	.123	.644	-.304
200	337	.048	.129	.568	-.424
200	338	.261	.138	.839	-.079
200	339	.043	.124	.530	-.361
200	340	.053	.114	.534	-.285
200	341	.107	.126	.648	-.245
200	342	.203	.126	.705	-.181
200	343	.210	.104	.625	-.044
200	344	.202	.093	.588	-.063
200	345	.106	.090	.533	-.151
200	346	.012	.077	.361	-.257
200	347	-.111	.077	.238	-.424
200	348	-.055	.085	.314	-.330
200	349	-.043	.069	.244	-.231
200	350	.038	.058	.337	-.155
200	351	.074	.057	.346	-.071
200	352	.088	.061	.406	-.091
200	353	.030	.066	.340	-.140
200	354	-.008	.064	.292	-.222
200	355	-.120	.072	.224	-.495
200	356	.023	.057	.310	-.140
200	357	-.091	.057	.244	-.299
200	358	-.051	.051	.175	-.245
200	359	.145	.080	.435	-.057
200	360	.020	.061	.284	-.173
200	361	.047	.073	.373	-.184
200	362	.171	.091	.541	-.043
200	363	.185	.095	.594	-.066
200	364	.226	.111	.843	-.039
200	365	.111	.090	.561	-.158
200	366	-.119	.140	.425	-.638
200	367	-.026	.073	.256	-.336
200	368	.304	.142	.914	-.093
200	369	.097	.206	.933	-.671
200	370	-.027	.059	.225	-.238
200	371	-.117	.068	.196	-.427
200	372	.082	.125	.584	-.354
200	373	.240	.149	.821	-.180
200	374	.249	.148	.823	-.193
200	401	-.510	.139	-.149	-1.414
200	402	-.483	.132	-.127	-1.141
200	403	-.437	.124	.012	-1.168
200	404	-.431	.133	.001	-1.101
200	405	-.317	.119	.103	-.781
200	406	-.546	.144	-.194	-1.512
200	407	-.291	.100	.121	-.699

WD	TAP	CPMEAN	CPRMS	CPMAX	CPMIN
200	408	-.534	.139	-.194	-1.395
200	409	-.506	.145	-.150	-1.160
200	410	-.477	.128	-.050	-1.402
200	411	-.394	.115	.101	-.863
200	412	-.352	.100	.079	-.805
200	413	-.417	.103	-.148	-1.237
200	414	-.452	.123	-.150	-1.173
200	415	-.458	.134	-.135	-1.273
200	416	-.479	.130	.018	-1.075
200	417	-.394	.134	.116	-1.077
200	418	-.408	.096	-.161	-.862
200	419	-.414	.106	-.093	-.952
200	420	-.485	.133	-.038	-1.221
200	421	-.419	.132	.057	-1.027
200	422	-.427	.170	.106	-1.497
200	423	-.377	.081	-.143	-.813
200	424	-.428	.095	-.141	-1.146
200	425	-.417	.106	-.114	-.916
200	426	-.419	.145	.061	-1.219
200	427	-.419	.155	.124	-1.136
200	428	-.468	.198	.112	-1.443
200	429	-.453	.095	-.158	-1.147
200	430	-.377	.082	-.126	-1.008
200	431	-.438	.111	-.081	-1.495
200	432	-.455	.143	-.066	-1.373
200	433	-.464	.170	.221	-1.348
200	434	-.527	.209	.127	-1.571
200	435	-.431	.104	-.201	-1.052
200	436	-.438	.106	-.115	-1.192
200	437	-.453	.120	-.024	-1.516
200	438	-.522	.150	-.036	-1.389
200	439	-.516	.194	.093	-1.463
200	440	-.532	.232	.074	-1.826
200	441	-.507	.129	-.149	-1.516
200	442	-.560	.136	-.138	-1.707
200	443	-.533	.144	-.090	-1.481
200	444	-.538	.159	.032	-1.325
200	445	-.536	.200	.060	-1.466
200	446	-.597	.231	-.002	-1.754
200	447	-.573	.145	-.212	-1.364
200	448	-.563	.149	-.204	-1.472
200	449	-.570	.170	-.117	-1.907
200	450	-.556	.170	-.072	-1.262
200	451	-.453	.154	-.038	-1.201
200	452	-.453	.146	-.003	-1.235
200	453	-.654	.285	-.131	-2.467
200	454	-.614	.202	-.027	-1.662
200	455	-.370	.172	.217	-1.139
200	456	-.213	.091	.071	-.738
200	457	-.231	.073	.026	-.606

APPENDIX A -- PRESSURE DATA: CONFIGURATION A: 1221 BRICKELL BUILDING

WD	TAP	CPMEAN	CPRMS	CPMAX	CPMIN
200	458	-.310	.077	-.020	-.598
200	459	-.336	.128	.154	-.937
200	460	-.385	.146	.028	-.985
200	461	-.378	.147	.012	-.992
200	462	-.215	.061	.012	-.495
200	463	-.322	.102	.066	-.871
200	464	-.191	.063	.089	-.432
200	465	.088	.107	.501	-.493
200	466	-.262	.075	.074	-.632
200	467	.186	.138	.698	-.238
200	468	-.233	.139	.323	-1.153
200	469	-.428	.150	.017	-1.062
200	470	-.269	.093	.012	-.647
200	471	-.274	.076	.003	-.526
200	472	-.313	.087	.042	-.647
200	501	-.645	.297	.295	-1.946
200	502	-.425	.185	.012	-1.086
200	503	-.329	.106	-.020	-.869
200	504	-.195	.101	.132	-.660
200	505	-.251	.077	.074	-.530
200	506	-.248	.088	.065	-.629
200	507	-.250	.070	.003	-.609
200	508	-.218	.108	.187	-.577
200	509	-.308	.095	.004	-.668
200	510	-.154	.053	.067	-.429
200	9124	-.500	.185	-.131	-1.488
200	9140	-.421	.124	-.083	-.951
200	9213	-.370	.167	.196	-1.325
200	9218	-.619	.142	-.136	-1.161
200	9317	.160	.131	.675	-.508
200	9322	.083	.104	.467	-.244
200	9348	-.075	.072	.288	-.303
200	9355	-.113	.079	.217	-.520
210	101	-.332	.073	-.100	-.632
210	102	-.328	.074	-.101	-.632
210	103	-.353	.080	-.100	-.970
210	104	-.332	.069	-.097	-.603
210	105	-.323	.065	-.133	-.586
210	106	-.356	.071	-.137	-1.017
210	107	-.347	.060	-.173	-.572
210	108	-.370	.070	-.136	-.681
210	109	-.370	.077	-.054	-.782
210	110	-.334	.055	-.153	-.574
210	111	-.375	.069	-.105	-.738
210	112	-.350	.062	-.102	-.698
210	113	-.337	.055	-.110	-.558
210	114	-.330	.056	-.125	-.524
210	115	-.348	.058	-.178	-.572
210	116	-.333	.058	-.156	-.550
210	117	-.375	.067	-.163	-.699

WD	TAP	CPMEAN	CPRMS	CPMAX	CPMIN
210	118	-.350	.059	-.156	-.634
210	119	-.362	.053	-.185	-.558
210	120	-.351	.058	-.180	-.679
210	121	-.340	.056	-.174	-.576
210	122	-.332	.056	-.161	-.577
210	123	-.413	.119	-.159	-1.041
210	124	-.416	.153	-.139	-1.423
210	125	-.428	.089	-.128	-.852
210	126	-.393	.079	-.125	-.727
210	127	-.385	.067	-.136	-.703
210	128	-.361	.062	-.187	-.603
210	129	-.351	.070	-.140	-.646
210	130	-.357	.093	-.108	-.771
210	131	-.310	.071	-.075	-.752
210	132	-.308	.064	-.122	-.647
210	133	-.329	.053	-.172	-.542
210	134	-.314	.055	-.146	-.529
210	135	-.322	.058	-.129	-.574
210	136	-.303	.059	-.078	-.542
210	137	-.298	.057	-.137	-.683
210	138	-.277	.057	-.075	-.527
210	139	-.297	.057	-.122	-.537
210	140	-.472	.114	-.134	-.932
210	141	-.442	.113	-.119	-.979
210	142	-.368	.088	-.051	-.773
210	143	-.372	.078	-.129	-.771
210	144	-.354	.073	-.170	-.730
210	145	-.311	.060	-.156	-.586
210	146	-.291	.060	-.137	-.536
210	147	-.311	.058	-.166	-.551
210	148	-.424	.126	.068	-.919
210	149	-.432	.134	-.033	-1.164
210	150	-.337	.108	.009	-.826
210	151	-.374	.079	-.117	-.663
210	152	-.392	.095	-.187	-.732
210	153	-.334	.075	-.160	-.736
210	154	-.305	.068	-.125	-.637
210	155	-.323	.069	-.138	-.750
210	156	-.420	.135	.032	-1.287
210	157	-.406	.135	.027	-.990
210	158	-.381	.125	.117	-.897
210	159	-.383	.116	-.018	-1.017
210	160	-.346	.126	.131	-.932
210	161	-.391	.155	-.029	-1.224
210	162	-.362	.113	-.084	-.895
210	163	-.361	.096	-.164	-.989
210	164	-.327	.082	-.107	-.949
210	165	-.318	.082	-.103	-.803
210	166	-.305	.108	.052	-.756
210	167	-.315	.095	.003	-.717

WD	TAP	CPMEAN	CPRMS	CPMAX	CPMIN
210	168	-.323	.097	.017	-.703
210	169	-.321	.095	.078	-.750
210	170	-.407	.122	.030	-1.117
210	171	-.455	.134	.041	-1.385
210	172	-.299	.060	-.100	-.545
210	173	-.290	.061	-.082	-.555
210	174	-.361	.064	-.161	-.575
210	201	-.259	.049	-.072	-.445
210	202	-.243	.042	-.091	-.401
210	203	-.188	.040	-.049	-.389
210	204	-.178	.098	.027	-.692
210	205	-.603	.253	.174	-1.476
210	206	-.704	.255	.040	-2.028
210	207	-.283	.050	-.083	-.452
210	208	-.215	.040	-.087	-.404
210	209	-.138	.050	.025	-.523
210	210	-.297	.209	.109	-1.060
210	211	-.623	.218	.244	-1.850
210	212	-.646	.194	-.100	-1.453
210	213	-.267	.057	-.064	-.609
210	214	-.286	.071	-.048	-.745
210	215	-.214	.142	.084	-.893
210	216	-.428	.239	.170	-1.257
210	217	-.524	.153	.209	-1.408
210	218	-.578	.144	.163	-1.377
210	219	-.282	.053	-.093	-.577
210	220	-.238	.056	.008	-.721
210	221	-.178	.103	.036	-.847
210	222	-.415	.263	.184	-1.360
210	223	-.533	.183	.249	-1.405
210	224	-.534	.175	.113	-1.435
210	225	-.304	.070	-.047	-.625
210	226	-.307	.054	-.098	-.633
210	227	-.186	.073	.001	-.662
210	228	-.237	.177	.194	-.890
210	229	-.336	.202	.281	-1.399
210	230	-.687	.524	.360	-3.165
210	231	-.262	.047	-.067	-.452
210	232	-.185	.054	-.001	-.631
210	233	-.146	.092	.116	-.805
210	234	-.240	.181	.156	-1.041
210	235	-.508	.236	.192	-1.471
210	236	-.230	.044	-.087	-.404
210	237	-.156	.043	-.001	-.325
210	238	-.164	.067	.039	-.694
210	239	-.168	.166	.148	-1.216
210	240	-.436	.191	.253	-1.293
210	241	-.201	.040	-.078	-.397
210	242	-.191	.039	-.032	-.358
210	243	-.101	.048	.072	-.348

APPENDIX A -- PRESSURE DATA: CONFIGURATION A; 1221 BRICKELL BUILDING

WD	TAP	CPMEAN	CPRMS	CPMAX	CPMIN
210	244	-.107	.118	.156	-.933
210	245	-.386	.211	.232	-1.156
210	246	-.278	.051	-.128	-.494
210	247	-.189	.046	-.027	-.426
210	248	-.131	.051	.055	-.492
210	249	-.102	.110	.174	-.739
210	250	-.416	.233	.353	-1.532
210	251	-.424	.186	.216	-1.468
210	252	-.233	.045	-.103	-.404
210	253	-.176	.040	-.024	-.390
210	254	-.114	.045	.057	-.471
210	255	-.125	.123	.138	-.848
210	256	-.342	.186	.282	-1.005
210	257	-.350	.154	.258	-1.117
210	258	-.290	.056	-.123	-.562
210	259	-.182	.044	-.041	-.397
210	260	-.107	.040	.071	-.298
210	261	-.058	.070	.193	-.490
210	262	-.179	.158	.273	-1.266
210	263	-.206	.149	.259	-.956
210	264	-.222	.052	-.067	-.483
210	265	-.154	.041	.008	-.329
210	266	-.118	.039	.083	-.283
210	267	-.012	.052	.230	-.268
210	268	-.062	.083	.246	-.548
210	269	-.060	.078	.241	-.749
210	270	-.326	.072	-.129	-.756
210	271	-.264	.058	-.112	-.571
210	272	-.605	.343	.284	-2.083
210	273	-.680	.318	.259	-2.181
210	274	-.314	.079	-.114	-.744
210	275	-.261	.054	-.060	-.505
210	276	-.214	.053	-.017	-.515
210	277	-.347	.238	.376	-1.671
210	278	-.504	.342	.480	-1.894
210	279	-.713	.394	.354	-2.497
210	280	-.201	.052	-.046	-.625
210	281	-.368	.230	.222	-1.280
210	282	-.247	.047	-.087	-.439
210	283	-.203	.042	-.077	-.429
210	284	-.278	.231	.233	-1.102
210	285	-.485	.209	.163	-1.407
210	301	.282	.145	.743	-.161
210	302	.299	.136	.728	-.131
210	303	.386	.142	.928	-.105
210	304	.467	.149	.996	-.026
210	305	.132	.115	.513	-.358
210	306	.458	.147	.936	-.048
210	307	.067	.097	.406	-.276
210	308	.320	.131	.801	-.069
210	309	-.033	.094	.346	-.436
210	310	-.054	.082	.292	-.430
210	311	.339	.138	.798	-.062
210	312	.489	.152	.940	.032
210	313	.499	.164	.984	-.032
210	314	.396	.138	.799	-.067
210	315	.206	.109	.584	-.166
210	316	.045	.086	.320	-.213
210	317	.279	.149	.861	-.180
210	318	.420	.154	.906	-.070
210	319	.453	.158	.922	.034
210	320	.346	.135	.745	.012
210	321	.113	.105	.482	-.166
210	322	-.011	.079	.305	-.227
210	323	.267	.143	.771	-.164
210	324	.369	.148	.907	-.014
210	325	.300	.153	.819	-.156
210	326	.364	.149	.867	-.003
210	327	.357	.141	.869	-.012
210	328	.241	.110	.651	-.032
210	329	.020	.090	.329	-.234
210	330	-.092	.072	.154	-.325
210	331	.237	.146	.758	-.183
210	332	.369	.158	1.105	-.079
210	333	.299	.159	.892	-.133
210	334	.331	.150	.932	-.041
210	335	.354	.150	.988	-.014
210	336	.226	.140	.879	-.190
210	337	.168	.144	.765	-.321
210	338	.303	.155	.987	-.163
210	339	.148	.138	.671	-.251
210	340	.151	.127	.604	-.251
210	341	.174	.139	.713	-.187
210	342	.223	.131	.739	-.094
210	343	.228	.125	.708	-.062
210	344	.190	.106	.635	-.077
210	345	.059	.088	.369	-.192
210	346	-.057	.069	.243	-.280
210	347	-.174	.068	.120	-.447
210	348	.051	.097	.571	-.286
210	349	.034	.088	.529	-.203
210	350	.064	.071	.426	-.122
210	351	.056	.057	.293	-.096
210	352	.047	.055	.273	-.110
210	353	-.026	.056	.221	-.173
210	354	-.070	.056	.209	-.265
210	355	-.176	.065	.184	-.490
210	356	-.033	.047	.188	-.211
210	357	-.144	.051	.098	-.352
210	358	-.117	.050	.085	-.320
210	359	.045	.074	.323	-.171
210	360	.063	.064	.508	-.211
210	361	.059	.072	.463	-.192
210	362	.140	.086	.517	-.053
210	363	.195	.103	.632	-.132
210	364	.137	.114	.628	-.152
210	365	.102	.106	.517	-.156
210	366	-.304	.151	.343	-.857
210	367	-.122	.079	.138	-.499
210	368	.228	.139	.795	-.089
210	369	-.088	.255	.809	-.898
210	370	-.065	.060	.185	-.256
210	371	-.159	.068	.190	-.560
210	372	.191	.148	.776	-.165
210	373	.308	.156	.836	-.071
210	374	.313	.156	.900	-.052
210	401	-.411	.095	-.110	-.919
210	402	-.391	.111	-.114	-.920
210	403	-.402	.141	.017	-1.118
210	404	-.457	.146	-.046	-1.186
210	405	-.385	.115	-.007	-.833
210	406	-.453	.098	-.162	-.970
210	407	-.354	.102	-.028	-.900
210	408	-.437	.095	-.161	-1.059
210	409	-.402	.102	-.108	-1.057
210	410	-.415	.117	-.082	-.975
210	411	-.382	.112	-.014	-.822
210	412	-.380	.100	-.050	-.774
210	413	-.382	.085	-.134	-.847
210	414	-.391	.095	-.162	-1.052
210	415	-.394	.105	-.126	-1.341
210	416	-.443	.112	-.163	-1.150
210	417	-.374	.099	-.012	-.842
210	418	-.374	.084	-.158	-.836
210	419	-.372	.088	-.115	-.847
210	420	-.429	.098	-.159	-1.249
210	421	-.382	.092	-.086	-.957
210	422	-.409	.118	-.062	-.975
210	423	-.337	.061	-.151	-.623
210	424	-.371	.063	-.186	-.700
210	425	-.359	.068	-.176	-.779
210	426	-.363	.080	-.162	-.906
210	427	-.392	.101	-.037	-.991
210	428	-.422	.124	-.047	-1.224
210	429	-.404	.061	-.230	-.709
210	430	-.335	.057	-.177	-.563
210	431	-.373	.065	-.202	-.842
210	432	-.395	.080	-.126	-.854
210	433	-.416	.107	-.031	-1.062
210	434	-.481	.130	-.086	-1.414

APPENDIX A -- PRESSURE DATA: CONFIGURATION A; 1221 BRICKELL BUILDING

WD	TAP	CPMEAN	CPRMS	CPMAX	CPMIN
210	435	-.382	.064	-.188	-.629
210	436	-.387	.064	-.210	-.669
210	437	-.392	.069	-.198	-.758
210	438	-.475	.085	-.253	-.848
210	439	-.467	.122	-.183	-1.073
210	440	-.493	.145	-.115	-1.443
210	441	-.462	.092	-.175	-.847
210	442	-.519	.095	-.216	-.903
210	443	-.486	.097	-.190	-.946
210	444	-.517	.121	-.193	-1.381
210	445	-.532	.141	-.072	-1.163
210	446	-.594	.153	-.130	-1.430
210	447	-.557	.127	-.225	-1.441
210	448	-.545	.120	-.239	-1.240
210	449	-.551	.130	-.223	-1.517
210	450	-.608	.140	-.226	-1.546
210	451	-.532	.129	-.142	-1.087
210	452	-.567	.152	-.162	-1.608
210	453	-.569	.210	-.182	-1.929
210	454	-.601	.178	-.121	-1.733
210	455	-.486	.172	.025	-1.383
210	456	-.322	.133	.052	-1.152
210	457	-.282	.098	.033	-.706
210	458	-.341	.088	-.023	-.704
210	459	-.425	.158	-.044	-1.562
210	460	-.423	.183	.071	-1.545
210	461	-.409	.149	-.014	-1.081
210	462	-.275	.081	-.013	-.696
210	463	-.410	.118	-.023	-.896
210	464	-.225	.083	.094	-.606
210	465	.029	.112	.433	-.640
210	466	-.310	.114	.190	-.709
210	467	.096	.154	.951	-.318
210	468	-.371	.156	.159	-1.244
210	469	-.474	.171	-.043	-1.299
210	470	-.343	.112	-.047	-.852
210	471	-.339	.094	-.023	-.663
210	472	-.379	.107	-.023	-.780
210	501	-.453	.244	.363	-1.541
210	502	-.194	.128	.159	-.792
210	503	-.289	.055	-.077	-.554
210	504	-.268	.113	.020	-.872
210	505	-.306	.102	.041	-.653
210	506	-.325	.100	-.036	-.749
210	507	-.343	.098	-.041	-.834
210	508	-.239	.116	.219	-.623
210	509	-.402	.107	-.043	-.823
210	510	-.203	.067	.049	-.536
210	9124	-.448	.139	-.150	-1.546
210	9140	-.469	.115	-.091	-.983
210	9213	-.273	.057	-.067	-.596
210	9218	-.501	.130	.172	-.978
210	9317	.256	.144	.730	-.153
210	9322	.006	.084	.404	-.294
210	9348	.035	.093	.453	-.285
210	9355	-.181	.070	.081	-.555
220	101	-.359	.071	-.128	-.649
220	102	-.355	.070	-.139	-.629
220	103	-.379	.072	-.154	-.740
220	104	-.357	.063	-.146	-.577
220	105	-.351	.063	-.121	-.626
220	106	-.365	.070	-.127	-.901
220	107	-.368	.060	-.184	-.656
220	108	-.379	.068	-.116	-.788
220	109	-.375	.063	-.137	-.621
220	110	-.363	.055	-.177	-.790
220	111	-.382	.057	-.156	-.621
220	112	-.365	.053	-.153	-.548
220	113	-.354	.053	-.181	-.552
220	114	-.343	.051	-.160	-.517
220	115	-.358	.051	-.163	-.534
220	116	-.344	.050	-.155	-.519
220	117	-.389	.063	-.146	-.817
220	118	-.374	.059	-.167	-.756
220	119	-.387	.053	-.233	-.593
220	120	-.368	.050	-.213	-.580
220	121	-.358	.052	-.201	-.600
220	122	-.349	.052	-.179	-.596
220	123	-.387	.060	-.214	-.684
220	124	-.373	.061	-.196	-.820
220	125	-.418	.078	-.167	-.796
220	126	-.400	.073	-.186	-.706
220	127	-.414	.069	-.224	-.763
220	128	-.391	.059	-.213	-.638
220	129	-.378	.062	-.213	-.704
220	130	-.378	.070	-.189	-.701
220	131	-.384	.081	-.182	-1.118
220	132	-.383	.079	-.201	-1.067
220	133	-.375	.059	-.215	-.722
220	134	-.367	.060	-.208	-.715
220	135	-.384	.064	-.179	-.761
220	136	-.363	.062	-.196	-.647
220	137	-.370	.061	-.201	-.794
220	138	-.348	.059	-.153	-.665
220	139	-.366	.059	-.135	-.633
220	140	-.449	.093	-.177	-.812
220	141	-.423	.089	-.144	-.907
220	142	-.409	.086	-.179	-.972
220	143	-.451	.100	-.231	-1.125
220	144	-.424	.088	-.218	-.931
220	145	-.380	.070	-.185	-.750
220	146	-.361	.067	-.170	-.651
220	147	-.378	.065	-.182	-.651
220	148	-.419	.127	-.051	-.982
220	149	-.401	.123	.048	-.964
220	150	-.367	.098	.030	-.751
220	151	-.429	.093	-.149	-.847
220	152	-.440	.113	-.194	-.982
220	153	-.383	.070	-.195	-.718
220	154	-.358	.067	-.167	-.717
220	155	-.374	.068	-.140	-.742
220	156	-.420	.150	.053	-1.026
220	157	-.419	.147	.038	-.962
220	158	-.421	.152	.095	-1.127
220	159	-.458	.131	.038	-1.221
220	160	-.372	.157	.094	-1.047
220	161	-.485	.187	-.093	-1.419
220	162	-.441	.129	-.158	-1.063
220	163	-.430	.106	-.147	-1.053
220	164	-.397	.090	-.155	-.853
220	165	-.389	.088	-.165	-.736
220	166	-.320	.118	.092	-.770
220	167	-.339	.108	.000	-.707
220	168	-.361	.101	-.073	-.820
220	169	-.351	.097	-.008	-.911
220	170	-.420	.127	.022	-1.002
220	171	-.458	.133	.079	-1.181
220	172	-.375	.059	-.203	-.683
220	173	-.365	.060	-.195	-.682
220	174	-.444	.063	-.274	-.741
220	201	-.249	.046	-.072	-.422
220	202	-.210	.044	-.037	-.401
220	203	-.127	.051	.063	-.303
220	204	-.044	.065	.211	-.340
220	205	-.075	.218	.385	-.982
220	206	-.253	.233	.533	-1.441
220	207	-.273	.043	-.083	-.415
220	208	-.182	.039	.001	-.365
220	209	-.066	.051	.143	-.340
220	210	-.011	.087	.300	-.627
220	211	-.138	.263	.535	-.961
220	212	-.211	.218	.520	-.953
220	213	-.250	.038	-.124	-.382
220	214	-.243	.038	-.081	-.394
220	215	-.067	.051	.124	-.354
220	216	.007	.154	.344	-.929
220	217	-.197	.230	.575	-.972
220	218	-.281	.200	.633	-1.306
220	219	-.283	.038	-.159	-.406
220	220	-.209	.037	-.060	-.354

APPENDIX A -- PRESSURE DATA: CONFIGURATION A; 1221 BRICKELL BUILDING

WD	TAP	CPMEAN	CPRMS	CPMAX	CPMIN
220	221	-.074	.050	.127	-.347
220	222	-.028	.140	.335	-.883
220	223	-.134	.252	.517	-1.139
220	224	-.181	.225	.656	-1.070
220	225	-.322	.050	-.166	-.524
220	226	-.307	.044	-.114	-.467
220	227	-.099	.054	.159	-.302
220	228	-.003	.137	.567	-.693
220	229	-.020	.222	.826	-.781
220	230	-.138	.380	.927	-2.138
220	231	-.279	.045	-.135	-.518
220	232	-.123	.048	.055	-.268
220	233	-.030	.068	.215	-.431
220	234	-.031	.110	.323	-.796
220	235	-.115	.256	.495	-1.271
220	236	-.238	.040	-.102	-.423
220	237	-.111	.045	.078	-.289
220	238	-.089	.063	.175	-.363
220	239	-.003	.109	.380	-.685
220	240	-.119	.205	.481	-.982
220	241	-.210	.041	-.017	-.398
220	242	-.162	.054	.137	-.443
220	243	-.047	.063	.248	-.356
220	244	-.006	.087	.349	-.547
220	245	-.099	.194	.534	-.960
220	246	-.302	.054	-.117	-.556
220	247	-.184	.054	.027	-.488
220	248	-.098	.063	.181	-.489
220	249	-.015	.095	.371	-.644
220	250	-.155	.224	.492	-1.193
220	251	-.196	.213	.566	-1.229
220	252	-.260	.047	-.105	-.497
220	253	-.177	.046	.011	-.396
220	254	-.088	.054	.153	-.344
220	255	-.019	.096	.319	-.507
220	256	-.105	.199	.392	-1.270
220	257	-.139	.190	.441	-1.044
220	258	-.325	.052	-.145	-.568
220	259	-.192	.045	-.020	-.361
220	260	-.095	.050	.151	-.293
220	261	-.013	.073	.334	-.461
220	262	-.095	.152	.379	-.864
220	263	-.103	.163	.389	-.735
220	264	-.261	.057	.010	-.547
220	265	-.173	.049	.050	-.380
220	266	-.115	.050	.123	-.262
220	267	.009	.057	.347	-.175
220	268	-.014	.083	.304	-.643
220	269	-.020	.090	.317	-.596
220	270	-.314	.044	-.150	-.472

WD	TAP	CPMEAN	CPRMS	CPMAX	CPMIN
220	271	-.233	.043	-.029	-.384
220	272	-.075	.285	.651	-1.493
220	273	-.177	.276	.655	-1.515
220	274	-.313	.048	-.173	-.519
220	275	-.244	.043	-.062	-.398
220	276	-.170	.046	.049	-.352
220	277	-.021	.173	.481	-.820
220	278	-.054	.267	.693	-1.136
220	279	-.161	.327	.621	-1.694
220	280	-.163	.044	.059	-.323
220	281	-.032	.210	.481	-.888
220	282	-.271	.043	-.121	-.443
220	283	-.172	.042	.022	-.323
220	284	-.001	.176	.386	-.888
220	285	-.156	.235	.484	-1.084
220	301	.304	.146	.760	-.149
220	302	.265	.127	.669	-.144
220	303	.480	.156	.977	-.024
220	304	.476	.153	.917	-.005
220	305	.053	.107	.384	-.267
220	306	.405	.138	.846	.018
220	307	-.030	.089	.282	-.372
220	308	.223	.118	.696	-.133
220	309	-.139	.081	.123	-.502
220	310	-.150	.069	.067	-.478
220	311	.447	.160	.899	.003
220	312	.507	.166	.991	.032
220	313	.421	.165	.974	-.060
220	314	.270	.127	.698	-.142
220	315	.087	.094	.403	-.180
220	316	-.057	.072	.239	-.304
220	317	.366	.154	.893	-.176
220	318	.434	.150	.874	-.012
220	319	.396	.144	.821	-.039
220	320	.251	.115	.636	-.084
220	321	.014	.085	.356	-.226
220	322	-.096	.063	.150	-.324
220	323	.342	.152	.887	-.023
220	324	.375	.155	.952	-.025
220	325	.321	.161	.929	-.112
220	326	.342	.154	.924	-.113
220	327	.318	.137	.828	-.044
220	328	.183	.106	.577	-.087
220	329	-.045	.087	.321	-.304
220	330	-.147	.067	.150	-.379
220	331	.293	.149	.764	-.197
220	332	.364	.155	.940	-.056
220	333	.293	.152	.822	-.053
220	334	.315	.146	.812	-.001
220	335	.313	.145	.807	-.051

WD	TAP	CPMEAN	CPRMS	CPMAX	CPMIN
220	336	.250	.145	.768	-.210
220	337	.187	.146	.737	-.219
220	338	.271	.136	.838	-.044
220	339	.182	.144	.739	-.186
220	340	.184	.129	.766	-.247
220	341	.184	.130	.744	-.117
220	342	.213	.122	.757	-.060
220	343	.190	.109	.649	-.053
220	344	.155	.103	.574	-.202
220	345	.020	.095	.652	-.306
220	346	-.102	.075	.294	-.343
220	347	-.223	.072	.164	-.554
220	348	.111	.097	.579	-.240
220	349	.088	.089	.534	-.195
220	350	.102	.073	.431	-.123
220	351	.077	.067	.382	-.090
220	352	.050	.064	.331	-.110
220	353	-.041	.063	.240	-.247
220	354	-.098	.059	.184	-.322
220	355	-.205	.063	.066	-.602
220	356	-.045	.057	.194	-.224
220	357	-.171	.058	.098	-.379
220	358	-.161	.055	.081	-.370
220	359	-.041	.082	.274	-.307
220	360	.072	.070	.456	-.231
220	361	.058	.079	.484	-.297
220	362	.110	.088	.498	-.195
220	363	.135	.098	.663	-.089
220	364	.045	.112	.591	-.245
220	365	.051	.101	.610	-.185
220	366	-.444	.153	.117	-1.124
220	367	-.209	.090	.116	-.646
220	368	.147	.133	.770	-.155
220	369	-.362	.278	.879	-1.215
220	370	-.087	.058	.150	-.300
220	371	-.185	.062	.133	-.464
220	372	.217	.139	.802	-.166
220	373	.274	.134	.827	-.076
220	374	.280	.130	.827	-.090
220	401	-.404	.089	-.128	-.830
220	402	-.424	.111	-.101	-1.241
220	403	-.435	.124	-.106	-1.428
220	404	-.477	.112	-.119	-1.134
220	405	-.399	.096	-.111	-.874
220	406	-.445	.091	-.162	-.879
220	407	-.399	.096	-.114	-.920
220	408	-.441	.083	-.197	-.860
220	409	-.405	.090	-.123	-.849
220	410	-.431	.112	-.097	-1.037
220	411	-.413	.105	-.099	-.934

APPENDIX A -- PRESSURE DATA: CONFIGURATION A: 1221 BRICKELL BUILDING

WD	TAP	CPMEAN	CPRMS	CPMAX	CPMIN
220	412	-.441	.097	-.145	-.890
220	413	-.405	.083	-.161	-.909
220	414	-.411	.080	-.183	-1.103
220	415	-.415	.089	-.186	-.939
220	416	-.471	.099	-.237	-1.106
220	417	-.402	.089	-.063	-.870
220	418	-.397	.075	-.195	-.772
220	419	-.395	.077	-.195	-.795
220	420	-.454	.082	-.219	-.846
220	421	-.410	.081	-.120	-.808
220	422	-.427	.096	-.145	-.934
220	423	-.378	.057	-.190	-.686
220	424	-.385	.060	-.200	-.759
220	425	-.384	.060	-.193	-.783
220	426	-.382	.064	-.167	-.677
220	427	-.403	.078	-.145	-.833
220	428	-.417	.093	-.124	-.894
220	429	-.426	.059	-.252	-.682
220	430	-.374	.055	-.219	-.609
220	431	-.385	.057	-.219	-.648
220	432	-.408	.061	-.231	-.663
220	433	-.413	.074	-.229	-.799
220	434	-.481	.089	-.261	-1.000
220	435	-.398	.056	-.205	-.655
220	436	-.390	.060	-.213	-.641
220	437	-.389	.060	-.204	-.685
220	438	-.458	.066	-.254	-.732
220	439	-.421	.075	-.207	-.827
220	440	-.437	.084	-.227	-.994
220	441	-.407	.069	-.192	-.706
220	442	-.469	.071	-.243	-.805
220	443	-.433	.071	-.226	-.735
220	444	-.459	.079	-.218	-.895
220	445	-.472	.097	-.197	-.983
220	446	-.543	.109	-.250	-1.112
220	447	-.513	.106	-.226	-1.009
220	448	-.519	.107	-.235	-1.099
220	449	-.535	.120	-.263	-1.246
220	450	-.606	.126	-.316	-1.237
220	451	-.544	.119	-.244	-1.192
220	452	-.567	.149	-.233	-1.257
220	453	-.520	.149	-.244	-1.832
220	454	-.578	.137	-.270	-1.316
220	455	-.531	.149	-.191	-1.461
220	456	-.456	.135	.012	-1.220
220	457	-.384	.121	-.004	-.801
220	458	-.418	.108	-.025	-.793
220	459	-.498	.153	-.147	-1.572
220	460	-.455	.220	.202	-1.501
220	461	-.495	.148	-.053	-1.426

WD	TAP	CPMEAN	CPRMS	CPMAX	CPMIN
220	462	-.375	.086	-.022	-.765
220	463	-.552	.127	-.100	-1.341
220	464	-.315	.100	.047	-.655
220	465	-.102	.106	.292	-.619
220	466	-.368	.117	.079	-.787
220	467	-.094	.140	.472	-.667
220	468	-.495	.138	-.044	-1.426
220	469	-.538	.184	-.073	-1.349
220	470	-.386	.111	-.010	-.769
220	471	-.396	.107	-.011	-.796
220	472	-.460	.112	-.042	-.990
220	501	-.076	.265	.546	-1.189
220	502	-.027	.086	.305	-.460
220	503	-.286	.047	-.102	-.529
220	504	-.454	.168	.045	-1.397
220	505	-.357	.106	-.023	-.742
220	506	-.433	.104	-.126	-.983
220	507	-.426	.097	-.118	-.950
220	508	-.273	.123	.233	-.678
220	509	-.487	.103	-.202	-.985
220	510	-.279	.087	.024	-.587
220	9124	-.428	.054	-.273	-.634
220	9140	-.441	.090	-.139	-.848
220	9213	-.267	.038	-.137	-.406
220	9218	-.218	.185	.537	-.899
220	9317	.388	.156	.946	-.052
220	9322	-.086	.066	.190	-.281
220	9348	.129	.093	.655	-.117
220	9355	-.216	.062	.026	-.492
230	101	-.369	.068	-.178	-.639
230	102	-.366	.068	-.183	-.611
230	103	-.392	.067	-.202	-.651
230	104	-.366	.061	-.188	-.577
230	105	-.363	.061	-.178	-.667
230	106	-.380	.068	-.179	-.812
230	107	-.382	.057	-.216	-.702
230	108	-.394	.067	-.203	-.743
230	109	-.397	.070	-.191	-.929
230	110	-.378	.060	-.199	-.746
230	111	-.406	.065	-.214	-.755
230	112	-.391	.059	-.222	-.661
230	113	-.371	.049	-.208	-.628
230	114	-.355	.047	-.207	-.566
230	115	-.366	.048	-.216	-.572
230	116	-.351	.047	-.200	-.555
230	117	-.406	.060	-.210	-.798
230	118	-.394	.056	-.219	-.644
230	119	-.406	.050	-.276	-.609
230	120	-.385	.046	-.256	-.572
230	121	-.392	.049	-.270	-.570

WD	TAP	CPMEAN	CPRMS	CPMAX	CPMIN
230	122	-.384	.049	-.255	-.573
230	123	-.433	.061	-.248	-.699
230	124	-.424	.063	-.234	-.717
230	125	-.440	.074	-.237	-.899
230	126	-.425	.070	-.207	-.791
230	127	-.435	.066	-.274	-.834
230	128	-.417	.060	-.249	-.842
230	129	-.423	.064	-.242	-.671
230	130	-.422	.069	-.233	-.682
230	131	-.480	.116	-.223	-1.153
230	132	-.478	.114	-.227	-1.105
230	133	-.418	.061	-.258	-.720
230	134	-.418	.065	-.243	-.755
230	135	-.454	.086	-.241	-1.013
230	136	-.411	.062	-.237	-.683
230	137	-.420	.069	-.244	-.756
230	138	-.399	.068	-.210	-.687
230	139	-.414	.067	-.218	-.667
230	140	-.471	.089	-.217	-.883
230	141	-.448	.087	-.141	-.837
230	142	-.441	.089	-.210	-.898
230	143	-.476	.096	-.269	-1.030
230	144	-.453	.082	-.237	-1.009
230	145	-.428	.075	-.249	-.887
230	146	-.409	.072	-.236	-.755
230	147	-.427	.069	-.265	-.741
230	148	-.426	.119	-.147	-1.101
230	149	-.412	.122	-.047	-.935
230	150	-.389	.099	-.050	-.888
230	151	-.470	.101	-.165	-1.053
230	152	-.488	.112	-.212	-1.243
230	153	-.432	.083	-.226	-.908
230	154	-.409	.079	-.207	-.791
230	155	-.425	.080	-.225	-.813
230	156	-.403	.160	.005	-1.154
230	157	-.385	.168	.052	-1.119
230	158	-.402	.156	.139	-1.306
230	159	-.508	.152	.256	-1.304
230	160	-.354	.170	.084	-1.055
230	161	-.484	.169	.059	-1.275
230	162	-.465	.124	-.174	-1.337
230	163	-.468	.110	-.234	-1.132
230	164	-.436	.095	-.212	-1.043
230	165	-.433	.092	-.194	-.981
230	166	-.307	.105	-.012	-.810
230	167	-.334	.097	-.060	-.732
230	168	-.370	.091	-.101	-.792
230	169	-.380	.092	-.079	-.880
230	170	-.410	.122	-.077	-.904
230	171	-.445	.127	-.078	-.975

APPENDIX A -- PRESSURE DATA: CONFIGURATION A: 1221 BRICKELL BUILDING

WD	TAP	CPMEAN	CPRMS	CPMAX	CPMIN
230	172	-.424	.071	-.234	-.730
230	173	-.413	.072	-.218	-.724
230	174	-.497	.074	-.287	-.819
230	201	-.221	.049	-.053	-.414
230	202	-.158	.056	.045	-.348
230	203	-.048	.070	.188	-.285
230	204	.077	.089	.355	-.240
230	205	.206	.115	.574	-.200
230	206	.244	.175	.714	-.407
230	207	-.234	.047	-.063	-.393
230	208	-.116	.051	.073	-.317
230	209	.041	.073	.295	-.204
230	210	.144	.104	.521	-.205
230	211	.291	.144	.788	-.438
230	212	.302	.205	.867	-.414
230	213	-.213	.037	-.066	-.339
230	214	-.178	.047	.022	-.314
230	215	.039	.071	.311	-.169
230	216	.195	.105	.554	-.245
230	217	.266	.188	.736	-.488
230	218	.183	.238	.765	-.635
230	219	-.262	.039	-.112	-.383
230	220	-.161	.046	.044	-.310
230	221	.019	.070	.307	-.169
230	222	.146	.111	.524	-.143
230	223	.255	.178	.733	-.509
230	224	.239	.224	.815	-.635
230	225	-.346	.056	-.192	-.579
230	226	-.296	.050	-.131	-.505
230	227	-.021	.068	.235	-.237
230	228	.177	.107	.630	-.159
230	229	.271	.159	.832	-.339
230	230	.260	.187	.878	-.964
230	231	-.274	.048	-.105	-.431
230	232	-.054	.062	.206	-.220
230	233	.071	.085	.375	-.155
230	234	.108	.113	.550	-.221
230	235	.185	.184	.750	-.865
230	236	-.224	.044	-.062	-.428
230	237	-.048	.060	.190	-.234
230	238	.000	.082	.320	-.250
230	239	.119	.099	.502	-.365
230	240	.129	.165	.653	-.676
230	241	-.192	.047	-.005	-.383
230	242	-.103	.066	.169	-.349
230	243	.030	.075	.360	-.244
230	244	.080	.094	.452	-.360
230	245	.089	.163	.615	-.628
230	246	-.294	.061	-.056	-.519
230	247	-.151	.063	.138	-.414
230	248	-.022	.077	.267	-.349
230	249	.097	.098	.489	-.374
230	250	.085	.151	.661	-.692
230	251	.081	.190	.818	-.603
230	252	-.254	.055	-.069	-.448
230	253	-.145	.058	.090	-.381
230	254	-.036	.066	.244	-.223
230	255	.078	.091	.481	-.223
230	256	.104	.143	.709	-.565
230	257	.091	.181	.832	-.677
230	258	-.335	.058	-.084	-.671
230	259	-.175	.050	.049	-.391
230	260	-.059	.051	.157	-.189
230	261	.045	.064	.333	-.145
230	262	.018	.100	.339	-.524
230	263	.046	.118	.400	-.516
230	264	-.266	.057	-.046	-.568
230	265	-.162	.051	.125	-.393
230	266	-.090	.056	.204	-.254
230	267	.038	.066	.436	-.154
230	268	.045	.079	.438	-.231
230	269	.043	.087	.514	-.372
230	270	-.305	.046	-.133	-.475
230	271	-.193	.046	-.008	-.356
230	272	.276	.166	.813	-.450
230	273	.245	.209	.904	-.479
230	274	-.314	.053	-.131	-.583
230	275	-.204	.049	.076	-.380
230	276	-.101	.056	.180	-.304
230	277	.194	.134	.715	-.452
230	278	.253	.154	.794	-.655
230	279	.269	.217	.901	-.861
230	280	-.110	.053	.146	-.267
230	281	.208	.148	.679	-.605
230	282	-.255	.045	-.106	-.448
230	283	-.118	.051	.090	-.321
230	284	.187	.111	.618	-.262
230	285	.144	.170	.669	-.590
230	301	.227	.145	.706	-.321
230	302	.166	.116	.580	-.324
230	303	.487	.167	1.045	-.168
230	304	.414	.149	.916	-.015
230	305	-.043	.090	.256	-.408
230	306	.308	.127	.691	-.131
230	307	-.121	.070	.125	-.355
230	308	.095	.102	.440	-.225
230	309	-.231	.064	-.027	-.512
230	310	-.226	.056	-.051	-.464
230	311	.496	.162	.960	-.157
230	312	.483	.154	.899	-.061
230	313	.328	.138	.713	-.096
230	314	.157	.099	.476	-.131
230	315	-.025	.072	.216	-.267
230	316	-.156	.056	.086	-.363
230	317	.398	.183	.956	-.325
230	318	.398	.164	.953	-.169
230	319	.299	.134	.779	-.086
230	320	.132	.099	.492	-.182
230	321	-.098	.069	.192	-.317
230	322	-.187	.050	.007	-.357
230	323	.332	.181	1.000	-.350
230	324	.327	.159	.957	-.291
230	325	.275	.183	1.013	-.334
230	326	.282	.152	.910	-.299
230	327	.194	.116	.648	-.090
230	328	.053	.080	.338	-.142
230	329	-.158	.061	.094	-.317
230	330	-.230	.049	-.029	-.407
230	331	.313	.159	.871	-.210
230	332	.330	.163	.905	-.263
230	333	.264	.147	.782	-.122
230	334	.252	.137	.741	-.082
230	335	.230	.137	.708	-.132
230	336	.292	.163	.988	-.211
230	337	.244	.169	.970	-.210
230	338	.247	.145	.866	-.114
230	339	.257	.158	.869	-.251
230	340	.244	.152	.836	-.329
230	341	.208	.146	.858	-.148
230	342	.192	.121	.736	-.097
230	343	.112	.095	.460	-.099
230	344	.061	.080	.404	-.130
230	345	-.082	.065	.254	-.272
230	346	-.182	.054	.074	-.412
230	347	-.285	.056	-.021	-.555
230	348	.119	.122	.705	-.408
230	349	.083	.111	.658	-.344
230	350	.084	.086	.496	-.126
230	351	.050	.068	.333	-.148
230	352	.012	.057	.259	-.194
230	353	-.089	.052	.132	-.275
230	354	-.151	.046	.043	-.362
230	355	-.248	.052	-.067	-.578
230	356	-.082	.046	.103	-.258
230	357	-.213	.047	-.039	-.434
230	358	-.193	.054	-.013	-.651
230	359	-.126	.054	.144	-.327
230	360	.062	.086	.411	-.315
230	361	.035	.091	.399	-.313
230	362	.075	.086	.544	-.138

APPENDIX A -- PRESSURE DATA: CONFIGURATION A: 1221 BRICKELL BUILDING

WD	TAP	CPMEAN	CPRMS	CPMAX	CPMIN
230	363	.066	.082	.435	-.133
230	364	-.065	.071	.283	-.268
230	365	-.013	.073	.308	-.201
230	366	-.540	.151	-.029	-1.253
230	367	-.314	.088	-.072	-.801
230	368	.063	.098	.520	-.227
230	369	-.585	.199	.463	-1.212
230	370	-.140	.049	.071	-.367
230	371	-.237	.054	.039	-.763
230	372	.282	.158	.937	-.284
230	373	.271	.140	.838	-.168
230	374	.274	.137	.817	-.063
230	401	-.399	.080	-.098	-.772
230	402	-.402	.085	-.060	-.964
230	403	-.396	.088	-.042	-.904
230	404	-.449	.088	-.120	-.989
230	405	-.404	.091	-.104	-.822
230	406	-.436	.082	-.167	-.815
230	407	-.411	.097	-.109	-.881
230	408	-.434	.076	-.201	-.820
230	409	-.395	.080	-.157	-.918
230	410	-.406	.095	-.060	-.888
230	411	-.393	.091	-.030	-.856
230	412	-.451	.099	-.170	-.965
230	413	-.389	.076	-.157	-.834
230	414	-.403	.084	-.182	-.934
230	415	-.399	.092	-.137	-1.020
230	416	-.448	.093	-.175	-1.169
230	417	-.399	.088	-.106	-.995
230	418	-.400	.063	-.198	-.787
230	419	-.400	.066	-.170	-.785
230	420	-.461	.073	-.206	-.800
230	421	-.420	.075	-.159	-.935
230	422	-.420	.083	-.148	-.858
230	423	-.388	.057	-.203	-.675
230	424	-.395	.053	-.241	-.657
230	425	-.393	.054	-.214	-.601
230	426	-.388	.057	-.201	-.645
230	427	-.399	.066	-.187	-.702
230	428	-.402	.072	-.156	-.738
230	429	-.443	.052	-.293	-.630
230	430	-.383	.054	-.212	-.607
230	431	-.397	.050	-.248	-.566
230	432	-.413	.054	-.245	-.651
230	433	-.405	.061	-.227	-.763
230	434	-.472	.073	-.257	-.889
230	435	-.413	.053	-.234	-.629
230	436	-.413	.053	-.215	-.616
230	437	-.410	.053	-.209	-.617
230	438	-.483	.056	-.261	-.754

WD	TAP	CPMEAN	CPRMS	CPMAX	CPMIN
230	439	-.435	.060	-.262	-.700
230	440	-.445	.066	-.248	-.992
230	441	-.418	.063	-.229	-.740
230	442	-.486	.065	-.298	-.823
230	443	-.441	.063	-.243	-.770
230	444	-.463	.070	-.274	-.988
230	445	-.470	.080	-.273	-.959
230	446	-.542	.088	-.332	-1.045
230	447	-.503	.092	-.271	-1.190
230	448	-.510	.092	-.252	-.900
230	449	-.521	.105	-.291	-1.221
230	450	-.598	.110	-.346	-1.185
230	451	-.527	.097	-.287	-1.065
230	452	-.537	.113	-.241	-1.455
230	453	-.512	.117	-.223	-1.370
230	454	-.583	.121	-.286	-1.268
230	455	-.544	.136	-.225	-1.328
230	456	-.459	.121	-.051	-1.076
230	457	-.393	.113	.001	-.825
230	458	-.439	.106	-.039	-.816
230	459	-.519	.148	-.210	-1.376
230	460	-.433	.222	.149	-1.570
230	461	-.466	.124	-.111	-.944
230	462	-.402	.090	-.106	-.857
230	463	-.617	.130	-.270	-1.125
230	464	-.334	.104	.008	-.774
230	465	-.251	.096	.073	-.671
230	466	-.373	.112	.094	-.784
230	467	-.273	.103	.191	-.729
230	468	-.547	.129	-.209	-1.141
230	469	-.500	.153	-.135	-1.371
230	470	-.396	.102	-.095	-.845
230	471	-.422	.102	.023	-.798
230	472	-.458	.095	-.023	-.893
230	501	.229	.178	.875	-.584
230	502	.102	.089	.425	-.122
230	503	-.270	.050	-.052	-.461
230	504	-.517	.148	-.126	-1.455
230	505	-.365	.099	-.025	-.856
230	506	-.455	.099	-.145	-.845
230	507	-.470	.101	-.137	-.972
230	508	-.299	.123	.096	-.832
230	509	-.507	.107	-.135	-1.169
230	510	-.301	.100	.056	-.670
230	9124	-.473	.060	-.305	-.685
230	9140	-.468	.082	-.202	-.943
230	9213	-.241	.038	-.082	-.389
230	9218	.253	.218	.867	-.460
230	9317	.400	.175	.970	-.351
230	9322	-.186	.054	.052	-.403

WD	TAP	CPMEAN	CPRMS	CPMAX	CPMIN
230	9348	.133	.131	.762	-.380
230	9355	-.279	.057	-.042	-.512
240	101	-.364	.061	-.189	-.659
240	102	-.362	.061	-.177	-.657
240	103	-.391	.060	-.202	-.724
240	104	-.357	.055	-.192	-.623
240	105	-.358	.056	-.194	-.587
240	106	-.386	.061	-.181	-.707
240	107	-.382	.053	-.216	-.640
240	108	-.396	.063	-.171	-.707
240	109	-.391	.068	-.185	-.700
240	110	-.385	.055	-.234	-.597
240	111	-.404	.066	-.191	-.759
240	112	-.378	.058	-.183	-.642
240	113	-.385	.048	-.203	-.569
240	114	-.363	.046	-.219	-.531
240	115	-.372	.047	-.228	-.547
240	116	-.350	.047	-.209	-.522
240	117	-.422	.060	-.201	-.762
240	118	-.412	.057	-.177	-.726
240	119	-.424	.051	-.267	-.619
240	120	-.392	.049	-.257	-.601
240	121	-.390	.051	-.235	-.560
240	122	-.382	.051	-.212	-.553
240	123	-.445	.061	-.277	-.694
240	124	-.429	.062	-.248	-.685
240	125	-.444	.069	-.256	-.785
240	126	-.432	.067	-.236	-.864
240	127	-.443	.065	-.260	-.964
240	128	-.422	.059	-.277	-.695
240	129	-.450	.069	-.238	-.739
240	130	-.454	.075	-.219	-.762
240	131	-.533	.124	-.191	-1.245
240	132	-.524	.121	-.221	-1.152
240	133	-.444	.070	-.254	-.988
240	134	-.449	.076	-.248	-.964
240	135	-.498	.102	-.249	-1.113
240	136	-.420	.066	-.236	-.796
240	137	-.423	.071	-.249	-.755
240	138	-.406	.069	-.212	-.707
240	139	-.420	.067	-.237	-.724
240	140	-.462	.099	-.233	-.991
240	141	-.463	.085	-.235	-1.011
240	142	-.457	.086	-.269	-1.005
240	143	-.482	.085	-.263	-.985
240	144	-.449	.072	-.279	-.755
240	145	-.442	.071	-.247	-.822
240	146	-.425	.068	-.227	-.771
240	147	-.442	.064	-.265	-.775
240	148	-.407	.112	-.077	-1.150

APPENDIX A -- PRESSURE DATA: CONFIGURATION A: 1221 BRICKELL BUILDING

WD	TAP	CPMEAN	CPRMS	CPMAX	CPMIN
240	149	-.396	.112	-.079	-.981
240	150	-.390	.087	-.048	-.869
240	151	-.484	.090	-.246	-.859
240	152	-.491	.094	-.267	-.924
240	153	-.444	.077	-.222	-.771
240	154	-.422	.074	-.208	-.757
240	155	-.437	.074	-.223	-.775
240	156	-.365	.155	.065	-1.114
240	157	-.363	.159	.103	-.921
240	158	-.381	.143	.083	-1.533
240	159	-.521	.145	-.079	-1.280
240	160	-.326	.174	.192	-1.118
240	161	-.500	.166	.008	-1.597
240	162	-.497	.116	-.234	-1.140
240	163	-.503	.102	-.242	-1.248
240	164	-.458	.091	-.212	-1.034
240	165	-.444	.096	-.183	-.863
240	166	-.273	.088	.030	-.586
240	167	-.304	.082	-.032	-.593
240	168	-.337	.077	-.089	-.770
240	169	-.354	.082	-.022	-.737
240	170	-.376	.118	-.050	-.965
240	171	-.405	.123	.026	-.974
240	172	-.439	.066	-.269	-.719
240	173	-.428	.066	-.250	-.709
240	174	-.514	.068	-.328	-.813
240	201	-.156	.057	.104	-.357
240	202	-.075	.072	.208	-.300
240	203	.052	.089	.387	-.221
240	204	.198	.103	.523	-.222
240	205	.353	.129	.758	-.131
240	206	.423	.148	.897	-.151
240	207	-.156	.052	.067	-.354
240	208	-.036	.066	.203	-.258
240	209	.141	.096	.534	-.145
240	210	.258	.133	.773	-.131
240	211	.417	.154	.865	-.010
240	212	.472	.165	.889	-.285
240	213	-.162	.043	.043	-.301
240	214	-.104	.062	.166	-.290
240	215	.138	.092	.458	-.152
240	216	.332	.124	.673	-.026
240	217	.451	.148	.857	.004
240	218	.438	.170	.915	-.240
240	219	-.214	.044	-.020	-.354
240	220	-.085	.060	.215	-.265
240	221	.132	.090	.501	-.105
240	222	.285	.132	.724	-.068
240	223	.419	.149	.882	.020
240	224	.381	.175	1.036	-.507
240	225	-.328	.056	-.166	-.529
240	226	-.254	.056	-.039	-.445
240	227	.051	.090	.423	-.185
240	228	.293	.138	.768	-.125
240	229	.380	.163	.892	-.247
240	230	.317	.174	.894	-.290
240	231	-.222	.058	.023	-.448
240	232	.029	.080	.316	-.202
240	233	.167	.103	.574	-.117
240	234	.206	.129	.700	-.150
240	235	.299	.145	.754	-.434
240	236	-.176	.050	.143	-.417
240	237	.016	.073	.301	-.222
240	238	.062	.094	.426	-.190
240	239	.178	.105	.552	-.126
240	240	.234	.145	.649	-.258
240	241	-.146	.059	.129	-.415
240	242	-.042	.088	.353	-.370
240	243	.093	.099	.449	-.274
240	244	.168	.109	.534	-.161
240	245	.229	.144	.683	-.338
240	246	-.261	.068	.015	-.528
240	247	-.100	.075	.199	-.401
240	248	.019	.087	.399	-.314
240	249	.134	.105	.494	-.252
240	250	.133	.134	.632	-.630
240	251	.181	.155	.726	-.949
240	252	-.221	.056	.021	-.402
240	253	-.100	.066	.225	-.282
240	254	.047	.094	.526	-.173
240	255	.132	.107	.660	-.152
240	256	.201	.147	.743	-.384
240	257	.220	.172	.822	-.380
240	258	-.316	.068	-.049	-.634
240	259	-.139	.062	.157	-.363
240	260	-.018	.069	.372	-.235
240	261	.077	.077	.485	-.173
240	262	.039	.103	.594	-.509
240	263	.076	.108	.663	-.342
240	264	-.243	.061	.005	-.465
240	265	-.130	.059	.225	-.310
240	266	-.061	.068	.351	-.209
240	267	.054	.068	.380	-.093
240	268	.045	.071	.449	-.267
240	269	.038	.077	.381	-.387
240	270	-.273	.045	-.047	-.437
240	271	-.131	.059	.094	-.360
240	272	.385	.164	.913	-.038
240	273	.363	.173	.923	-.225
240	274	-.286	.058	-.042	-.530
240	275	-.148	.060	.083	-.358
240	276	-.021	.073	.288	-.234
240	277	.324	.149	.792	-.072
240	278	.370	.153	.863	-.010
240	279	.408	.162	.935	-.052
240	280	-.036	.064	.232	-.224
240	281	.350	.144	.856	-.034
240	282	-.214	.054	.024	-.454
240	283	-.043	.066	.180	-.253
240	284	.267	.131	.751	-.248
240	285	.260	.150	.785	-.333
240	301	.013	.185	.516	-.717
240	302	.044	.099	.383	-.434
240	303	.226	.234	.829	-.602
240	304	.232	.149	.676	-.610
240	305	-.152	.074	.072	-.462
240	306	.151	.107	.503	-.196
240	307	-.188	.056	-.017	-.431
240	308	-.033	.078	.265	-.295
240	309	-.298	.053	-.134	-.580
240	310	-.276	.049	-.130	-.535
240	311	.295	.232	.844	-.602
240	312	.318	.177	.797	-.529
240	313	.169	.121	.584	-.245
240	314	.033	.080	.310	-.236
240	315	-.104	.053	.092	-.275
240	316	-.229	.047	-.042	-.426
240	317	.211	.241	.917	-.529
240	318	.263	.186	.832	-.559
240	319	.180	.113	.614	-.137
240	320	.026	.079	.325	-.204
240	321	-.180	.054	.056	-.364
240	322	-.242	.042	-.071	-.390
240	323	.112	.229	.824	-.569
240	324	.160	.195	.739	-.583
240	325	.060	.217	.778	-.897
240	326	.126	.176	.689	-.651
240	327	.094	.098	.480	-.220
240	328	-.029	.064	.241	-.211
240	329	-.219	.051	-.001	-.405
240	330	-.270	.044	-.107	-.421
240	331	.183	.198	.792	-.726
240	332	.185	.208	.846	-.504
240	333	.167	.158	.699	-.390
240	334	.147	.140	.628	-.361
240	335	.130	.116	.572	-.303
240	336	.221	.171	.887	-.469
240	337	.194	.173	.823	-.553
240	338	.187	.121	.667	-.337
240	339	.193	.172	.840	-.802

APPENDIX A -- PRESSURE DATA: CONFIGURATION A: 1221 BRICKELL BUILDING

WD	TAP	CPMEAN	CPRMS	CPMAX	CPMIN
240	340	.158	.169	.777	-.881
240	341	.131	.137	.666	-.636
240	342	.121	.100	.549	-.119
240	343	.074	.094	.492	-.127
240	344	.020	.077	.406	-.159
240	345	-.129	.060	.138	-.386
240	346	-.224	.047	-.025	-.385
240	347	-.311	.050	-.148	-.499
240	348	.034	.160	.682	-.585
240	349	.009	.145	.673	-.734
240	350	.039	.095	.580	-.409
240	351	-.002	.069	.298	-.257
240	352	-.030	.058	.217	-.204
240	353	-.126	.051	.119	-.288
240	354	-.181	.046	.021	-.344
240	355	-.274	.051	-.084	-.562
240	356	-.100	.050	.101	-.278
240	357	-.233	.050	-.037	-.550
240	358	-.199	.056	.004	-.426
240	359	-.149	.051	.087	-.359
240	360	.027	.109	.589	-.469
240	361	-.004	.115	.465	-.572
240	362	.041	.095	.493	-.354
240	363	.007	.080	.407	-.298
240	364	-.112	.056	.122	-.273
240	365	-.046	.072	.245	-.245
240	366	-.492	.126	-.143	-1.007
240	367	-.319	.084	-.054	-.705
240	368	.028	.091	.613	-.304
240	369	-.558	.170	.255	-1.253
240	370	-.167	.048	.126	-.405
240	371	-.254	.052	-.085	-.453
240	372	.234	.188	.820	-.785
240	373	.228	.137	.747	-.181
240	374	.228	.134	.725	-.196
240	401	-.378	.065	-.157	-.725
240	402	-.378	.071	-.134	-.765
240	403	-.370	.072	-.130	-.764
240	404	-.422	.075	-.221	-.768
240	405	-.379	.073	-.164	-.815
240	406	-.412	.067	-.192	-.776
240	407	-.388	.079	-.176	-.908
240	408	-.413	.068	-.187	-.792
240	409	-.371	.069	-.148	-.758
240	410	-.380	.075	-.088	-.844
240	411	-.370	.073	-.128	-.747
240	412	-.433	.085	-.185	-.875
240	413	-.378	.067	-.153	-.673
240	414	-.387	.070	-.164	-.765
240	415	-.380	.074	-.154	-.845
240	416	-.434	.077	-.166	-1.026
240	417	-.397	.079	-.148	-.939
240	418	-.386	.065	-.183	-.740
240	419	-.386	.069	-.190	-.738
240	420	-.447	.076	-.223	-.937
240	421	-.406	.079	-.187	-.922
240	422	-.413	.076	-.213	-1.047
240	423	-.386	.053	-.216	-.642
240	424	-.389	.055	-.192	-.632
240	425	-.388	.054	-.234	-.643
240	426	-.380	.057	-.209	-.645
240	427	-.386	.063	-.151	-.698
240	428	-.384	.066	-.174	-.775
240	429	-.445	.054	-.270	-.653
240	430	-.382	.052	-.213	-.605
240	431	-.393	.051	-.221	-.613
240	432	-.403	.053	-.239	-.617
240	433	-.390	.058	-.201	-.667
240	434	-.459	.066	-.224	-.796
240	435	-.409	.050	-.217	-.592
240	436	-.421	.052	-.259	-.621
240	437	-.417	.052	-.246	-.626
240	438	-.491	.055	-.331	-.778
240	439	-.436	.057	-.244	-.697
240	440	-.433	.061	-.213	-.736
240	441	-.412	.058	-.219	-.662
240	442	-.484	.061	-.285	-.759
240	443	-.431	.059	-.260	-.699
240	444	-.443	.059	-.261	-.728
240	445	-.445	.063	-.237	-.891
240	446	-.521	.068	-.288	-.889
240	447	-.464	.066	-.233	-.774
240	448	-.470	.074	-.265	-.786
240	449	-.476	.079	-.262	-.864
240	450	-.557	.083	-.319	-1.027
240	451	-.498	.088	-.283	-1.154
240	452	-.512	.090	-.194	-1.092
240	453	-.505	.113	-.258	-1.422
240	454	-.584	.117	-.319	-1.351
240	455	-.536	.126	-.269	-1.577
240	456	-.451	.116	-.083	-.964
240	457	-.359	.106	-.062	-.831
240	458	-.413	.102	-.077	-.818
240	459	-.504	.148	-.169	-1.487
240	460	-.356	.202	.097	-1.556
240	461	-.401	.099	-.098	-.821
240	462	-.374	.090	-.037	-.736
240	463	-.585	.125	-.279	-1.118
240	464	-.297	.089	.079	-.770
240	465	-.270	.079	.037	-.644
240	466	-.335	.090	.095	-.766
240	467	-.290	.090	.048	-.764
240	468	-.527	.119	-.233	-1.079
240	469	-.431	.119	-.107	-1.112
240	470	-.358	.086	-.080	-.912
240	471	-.379	.087	-.072	-.830
240	472	-.437	.085	-.062	-.834
240	501	.350	.161	1.063	-.318
240	502	.202	.112	.675	-.091
240	503	-.223	.061	.037	-.449
240	504	-.488	.133	-.176	-1.404
240	505	-.340	.084	-.044	-.723
240	506	-.438	.097	-.179	-.878
240	507	-.468	.102	-.195	-1.079
240	508	-.297	.107	.102	-.708
240	509	-.491	.099	-.192	-1.105
240	510	-.311	.097	-.024	-.694
240	9124	-.493	.060	-.308	-.730
240	9140	-.473	.080	-.251	-.906
240	9213	-.186	.047	-.018	-.380
240	9218	.472	.175	1.059	-.255
240	9317	.197	.240	.878	-.592
240	9322	-.246	.044	-.076	-.412
240	9348	.050	.175	.648	-.600
240	9355	-.292	.052	-.107	-.500
250	101	-.357	.061	-.182	-.721
250	102	-.355	.061	-.176	-.713
250	103	-.384	.061	-.225	-.677
250	104	-.352	.057	-.180	-.665
250	105	-.368	.057	-.208	-.672
250	106	-.396	.060	-.209	-.697
250	107	-.394	.055	-.214	-.667
250	108	-.413	.064	-.226	-.814
250	109	-.408	.075	-.191	-.820
250	110	-.379	.050	-.205	-.582
250	111	-.422	.076	-.188	-.764
250	112	-.394	.065	-.204	-.721
250	113	-.391	.054	-.235	-.669
250	114	-.367	.051	-.205	-.637
250	115	-.377	.050	-.221	-.644
250	116	-.356	.049	-.175	-.622
250	117	-.432	.069	-.170	-.913
250	118	-.420	.063	-.224	-.821
250	119	-.429	.055	-.235	-.663
250	120	-.396	.051	-.231	-.585
250	121	-.393	.054	-.233	-.618
250	122	-.384	.055	-.205	-.622
250	123	-.454	.069	-.239	-.764
250	124	-.438	.071	-.226	-.782
250	125	-.440	.081	-.252	-1.011

APPENDIX A -- PRESSURE DATA: CONFIGURATION A) 1221 BRICKELL BUILDING

WD	TAP	CPMEAN	CPRMS	CPMAX	CPMIN
250	126	-.430	.079	-.255	-1.018
250	127	-.443	.071	-.270	-.961
250	128	-.421	.064	-.253	-.716
250	129	-.464	.074	-.279	-.774
250	130	-.470	.082	-.272	-.826
250	131	-.566	.142	-.270	-1.241
250	132	-.559	.139	-.279	-1.158
250	133	-.447	.075	-.284	-.772
250	134	-.453	.082	-.274	-.836
250	135	-.509	.119	-.284	-1.387
250	136	-.420	.071	-.240	-.707
250	137	-.434	.068	-.259	-.707
250	138	-.417	.066	-.241	-.689
250	139	-.434	.066	-.249	-.703
250	140	-.481	.100	-.233	-.971
250	141	-.463	.091	-.242	-.888
250	142	-.458	.092	-.209	-1.013
250	143	-.477	.089	-.242	-.891
250	144	-.444	.075	-.211	-.806
250	145	-.442	.079	-.226	-.878
250	146	-.425	.075	-.195	-.843
250	147	-.443	.071	-.232	-.827
250	148	-.382	.108	-.102	-.889
250	149	-.370	.100	-.071	-.837
250	150	-.377	.085	-.051	-.812
250	151	-.479	.089	-.207	-.891
250	152	-.490	.099	-.243	-.925
250	153	-.458	.086	-.191	-.976
250	154	-.434	.080	-.178	-.829
250	155	-.450	.081	-.199	-.841
250	156	-.337	.155	.027	-.896
250	157	-.319	.142	.080	-.994
250	158	-.340	.132	.083	-1.196
250	159	-.476	.130	-.018	-1.218
250	160	-.285	.157	.129	-.996
250	161	-.439	.152	-.010	-1.373
250	162	-.495	.120	-.142	-1.040
250	163	-.515	.118	-.272	-1.105
250	164	-.470	.106	-.206	-.928
250	165	-.465	.102	-.217	-.948
250	166	-.265	.085	.057	-.625
250	167	-.296	.081	.054	-.672
250	168	-.324	.082	-.051	-.767
250	169	-.335	.086	.001	-.744
250	170	-.367	.116	-.091	-.910
250	171	-.392	.115	-.062	-.951
250	172	-.434	.065	-.266	-.695
250	173	-.422	.065	-.253	-.685
250	174	-.512	.068	-.327	-.793
250	201	-.087	.065	.143	-.325
250	202	.012	.085	.311	-.296
250	203	.146	.104	.481	-.211
250	204	.279	.126	.705	-.159
250	205	.417	.147	.899	-.111
250	206	.436	.157	.976	-.122
250	207	-.086	.066	.192	-.330
250	208	.055	.080	.337	-.240
250	209	.257	.109	.620	-.106
250	210	.381	.141	.820	-.080
250	211	.510	.151	.912	-.013
250	212	.504	.156	1.013	.026
250	213	-.099	.057	.123	-.310
250	214	-.017	.081	.270	-.258
250	215	.256	.111	.612	-.048
250	216	.425	.144	.839	-.067
250	217	.503	.158	.928	-.040
250	218	.424	.169	.884	-.149
250	219	-.159	.055	.063	-.322
250	220	-.017	.073	.280	-.272
250	221	.205	.111	.560	-.108
250	222	.333	.158	.806	-.123
250	223	.415	.167	.876	-.065
250	224	.369	.162	.934	-.087
250	225	-.296	.058	-.101	-.543
250	226	-.198	.063	.061	-.401
250	227	.135	.099	.570	-.133
250	228	.350	.145	.920	.001
250	229	.355	.156	.923	-.029
250	230	.194	.171	.844	-.292
250	231	-.163	.062	.103	-.383
250	232	.100	.095	.497	-.182
250	233	.233	.118	.727	-.094
250	234	.248	.141	.744	-.106
250	235	.282	.140	.782	-.086
250	236	-.124	.059	.129	-.414
250	237	.084	.089	.409	-.175
250	238	.123	.114	.534	-.194
250	239	.229	.122	.596	-.072
250	240	.253	.144	.778	-.141
250	241	-.098	.076	.241	-.406
250	242	.007	.111	.422	-.463
250	243	.141	.119	.612	-.359
250	244	.218	.136	.668	-.391
250	245	.264	.151	.795	-.345
250	246	-.203	.079	.158	-.494
250	247	-.027	.087	.414	-.348
250	248	.091	.107	.506	-.337
250	249	.203	.128	.720	-.215
250	250	.189	.151	.760	-.258
250	251	.233	.149	.737	-.225
250	252	-.168	.069	.109	-.402
250	253	-.030	.081	.334	-.289
250	254	.118	.105	.605	-.137
250	255	.206	.128	.775	-.058
250	256	.222	.135	.745	-.242
250	257	.223	.143	.821	-.336
250	258	-.263	.073	.130	-.644
250	259	-.070	.072	.428	-.291
250	260	.058	.081	.519	-.182
250	261	.144	.093	.644	-.089
250	262	.077	.102	.689	-.211
250	263	.093	.090	.506	-.192
250	264	-.203	.061	.089	-.436
250	265	-.070	.062	.267	-.261
250	266	.010	.083	.458	-.187
250	267	.120	.087	.624	-.112
250	268	.085	.076	.544	-.116
250	269	.047	.063	.413	-.110
250	270	-.215	.054	-.003	-.429
250	271	-.055	.071	.207	-.256
250	272	.394	.152	.877	.015
250	273	.315	.152	.784	-.095
250	274	-.230	.057	.036	-.432
250	275	-.080	.066	.251	-.297
250	276	.057	.084	.406	-.175
250	277	.366	.156	.874	-.024
250	278	.372	.155	.935	-.054
250	279	.303	.162	.920	-.196
250	280	.044	.082	.406	-.158
250	281	.360	.154	.900	-.022
250	282	-.145	.062	.176	-.359
250	283	.030	.080	.339	-.216
250	284	.313	.137	.783	-.021
250	285	.284	.146	.812	-.136
250	301	-.403	.175	.263	-1.070
250	302	-.199	.184	.228	-.782
250	303	-.238	.215	.582	-1.006
250	304	-.123	.263	.499	-1.006
250	305	-.243	.059	-.059	-.630
250	306	.022	.085	.282	-.487
250	307	-.247	.048	-.096	-.468
250	308	-.127	.058	.102	-.285
250	309	-.354	.051	-.197	-.658
250	310	-.310	.049	-.152	-.583
250	311	-.130	.237	.652	-.869
250	312	-.061	.274	.602	-.950
250	313	.023	.112	.372	-.573
250	314	-.070	.060	.159	-.258
250	315	-.174	.042	-.024	-.324
250	316	-.289	.044	-.110	-.462

APPENDIX A -- PRESSURE DATA: CONFIGURATION A; 1221 BRICKELL BUILDING

WD	TAP	CPMEAN	CPRMS	CPMAX	CPMIN
250	317	-.225	.232	.591	-.922
250	318	-.135	.262	.547	-.867
250	319	.044	.121	.358	-.682
250	320	-.070	.060	.149	-.306
250	321	-.249	.042	-.087	-.436
250	322	-.287	.036	-.166	-.446
250	323	-.245	.185	.441	-.979
250	324	-.206	.215	.454	-1.030
250	325	-.322	.238	.425	-1.660
250	326	-.217	.224	.396	-1.145
250	327	-.065	.132	.341	-.651
250	328	-.118	.060	.132	-.361
250	329	-.277	.046	-.085	-.477
250	330	-.304	.043	-.164	-.478
250	331	-.070	.216	.646	-1.021
250	332	-.089	.215	.674	-.831
250	333	-.054	.203	.518	-.912
250	334	-.048	.179	.462	-.899
250	335	-.034	.151	.374	-.705
250	336	-.006	.213	.617	-.661
250	337	-.037	.261	.720	-1.016
250	338	.089	.113	.472	-.388
250	339	-.048	.303	.813	-1.616
250	340	-.073	.250	.717	-1.023
250	341	-.048	.240	.591	-1.090
250	342	.037	.091	.423	-.378
250	343	-.015	.078	.302	-.228
250	344	-.055	.064	.202	-.203
250	345	-.189	.049	.033	-.350
250	346	-.258	.040	-.069	-.427
250	347	-.328	.045	-.184	-.510
250	348	-.184	.166	.552	-.644
250	349	-.206	.180	.425	-.811
250	350	-.081	.119	.338	-.573
250	351	-.071	.066	.206	-.382
250	352	-.082	.052	.195	-.261
250	353	-.169	.047	.086	-.378
250	354	-.212	.042	.043	-.465
250	355	-.291	.047	-.135	-.503
250	356	-.129	.042	.039	-.280
250	357	-.256	.045	-.085	-.453
250	358	-.214	.050	-.037	-.422
250	359	-.195	.046	.034	-.419
250	360	-.135	.119	.298	-.742
250	361	-.179	.131	.252	-.970
250	362	-.091	.102	.304	-.492
250	363	-.060	.068	.271	-.333
250	364	-.152	.051	.077	-.325
250	365	-.074	.067	.191	-.311
250	366	-.459	.124	-.117	-1.042
250	367	-.335	.086	-.005	-.700
250	368	-.034	.094	.406	-.251
250	369	-.513	.147	.069	-1.246
250	370	-.191	.040	-.022	-.364
250	371	-.268	.048	-.096	-.559
250	372	-.071	.323	.731	-1.724
250	373	.103	.143	.565	-.797
250	374	.113	.123	.560	-.631
250	401	-.370	.069	-.170	-.654
250	402	-.377	.065	-.184	-.665
250	403	-.365	.064	-.174	-.630
250	404	-.417	.065	-.217	-.689
250	405	-.368	.071	-.156	-.746
250	406	-.403	.071	-.200	-.708
250	407	-.375	.075	-.168	-.871
250	408	-.433	.071	-.203	-.758
250	409	-.387	.067	-.186	-.765
250	410	-.383	.067	-.177	-.647
250	411	-.372	.064	-.167	-.620
250	412	-.432	.074	-.225	-.838
250	413	-.385	.066	-.171	-.760
250	414	-.390	.072	-.035	-.861
250	415	-.381	.072	-.076	-.740
250	416	-.436	.073	-.179	-.859
250	417	-.396	.073	-.181	-.818
250	418	-.402	.078	-.212	-.923
250	419	-.400	.078	-.206	-.951
250	420	-.461	.084	-.234	-1.049
250	421	-.420	.084	-.186	-.999
250	422	-.426	.073	-.238	-.919
250	423	-.385	.056	-.215	-.607
250	424	-.387	.058	-.170	-.615
250	425	-.405	.059	-.226	-.654
250	426	-.396	.063	-.186	-.666
250	427	-.402	.064	-.165	-.726
250	428	-.379	.066	-.174	-1.030
250	429	-.450	.057	-.254	-.671
250	430	-.395	.051	-.195	-.592
250	431	-.391	.053	-.220	-.587
250	432	-.391	.055	-.223	-.579
250	433	-.374	.060	-.199	-.589
250	434	-.452	.069	-.201	-.881
250	435	-.396	.049	-.246	-.543
250	436	-.397	.051	-.232	-.571
250	437	-.393	.051	-.231	-.573
250	438	-.473	.054	-.298	-.666
250	439	-.409	.056	-.162	-.631
250	440	-.425	.057	-.137	-.771
250	441	-.410	.049	-.243	-.584
250	442	-.492	.052	-.314	-.687
250	443	-.430	.050	-.269	-.606
250	444	-.426	.059	-.260	-.698
250	445	-.430	.068	-.197	-.803
250	446	-.515	.075	-.310	-.886
250	447	-.440	.067	-.246	-.758
250	448	-.454	.066	-.278	-.745
250	449	-.458	.072	-.286	-1.046
250	450	-.549	.076	-.344	-1.024
250	451	-.490	.086	-.301	-.970
250	452	-.498	.089	-.267	-.954
250	453	-.484	.102	-.231	-1.128
250	454	-.575	.107	-.307	-1.140
250	455	-.523	.118	-.246	-1.210
250	456	-.401	.121	-.032	-.850
250	457	-.315	.102	-.024	-.741
250	458	-.388	.098	-.097	-.758
250	459	-.465	.135	-.126	-1.520
250	460	-.295	.183	.290	-1.580
250	461	-.386	.087	-.146	-.756
250	462	-.361	.091	-.067	-.784
250	463	-.556	.112	-.233	-1.041
250	464	-.286	.080	.018	-.638
250	465	-.285	.075	-.064	-.739
250	466	-.324	.078	.069	-.627
250	467	-.300	.085	-.059	-.686
250	468	-.484	.113	-.165	-1.123
250	469	-.405	.118	-.102	-1.242
250	470	-.352	.089	-.090	-.846
250	471	-.382	.087	-.102	-.795
250	472	-.416	.079	-.115	-.827
250	501	.346	.150	.948	-.057
250	502	.313	.132	.747	-.045
250	503	-.152	.076	.220	-.414
250	504	-.445	.112	-.116	-.966
250	505	-.318	.076	-.078	-.634
250	506	-.396	.093	-.115	-.837
250	507	-.464	.102	-.155	-.953
250	508	-.284	.103	.082	-.691
250	509	-.463	.092	-.192	-.850
250	510	-.274	.094	.030	-.577
250	9124	-.492	.060	-.333	-.726
250	9140	-.463	.085	-.255	-.903
250	9213	-.114	.057	.089	-.298
250	9218	.518	.157	.993	-.097
250	9317	-.225	.238	.579	-1.075
250	9322	-.294	.038	-.151	-.446
250	9348	-.160	.179	.474	-.982
250	9355	-.306	.050	-.152	-.557
260	101	-.358	.059	-.184	-.708
260	102	-.359	.059	-.184	-.704

APPENDIX A -- PRESSURE DATA: CONFIGURATION A; 1221 BRICKELL BUILDING

WD	TAP	CPMEAN	CPRMS	CPMAX	CPMIN
260	103	-.393	.057	-.210	-.798
260	104	-.354	.054	-.197	-.640
260	105	-.361	.056	-.175	-.585
260	106	-.396	.062	-.229	-.884
260	107	-.384	.057	-.206	-.629
260	108	-.413	.068	-.232	-.932
260	109	-.418	.077	-.221	-.967
260	110	-.398	.064	-.220	-.715
260	111	-.429	.080	-.236	-1.000
260	112	-.402	.069	-.216	-.939
260	113	-.387	.057	-.234	-.704
260	114	-.364	.054	-.207	-.628
260	115	-.371	.054	-.226	-.618
260	116	-.351	.053	-.206	-.573
260	117	-.433	.081	-.228	-.992
260	118	-.422	.072	-.236	-.898
260	119	-.419	.059	-.243	-.680
260	120	-.385	.054	-.216	-.575
260	121	-.380	.056	-.198	-.617
260	122	-.375	.056	-.191	-.616
260	123	-.446	.070	-.270	-.715
260	124	-.432	.073	-.252	-.735
260	125	-.452	.093	-.255	-1.120
260	126	-.444	.089	-.250	-.898
260	127	-.449	.079	-.252	-.907
260	128	-.426	.073	-.242	-.745
260	129	-.457	.075	-.260	-.720
260	130	-.467	.082	-.262	-.794
260	131	-.563	.148	-.252	-1.463
260	132	-.559	.144	-.237	-1.330
260	133	-.449	.083	-.182	-.802
260	134	-.457	.090	-.188	-.849
260	135	-.514	.128	-.164	-1.196
260	136	-.424	.079	-.156	-.786
260	137	-.435	.078	-.223	-.880
260	138	-.422	.075	-.214	-.727
260	139	-.434	.073	-.238	-.726
260	140	-.472	.105	-.230	-.939
260	141	-.473	.102	-.239	-1.070
260	142	-.474	.104	-.217	-1.072
260	143	-.485	.097	-.238	-.935
260	144	-.452	.086	-.216	-.896
260	145	-.436	.080	-.214	-.754
260	146	-.423	.077	-.210	-.768
260	147	-.436	.072	-.222	-.733
260	148	-.334	.098	-.010	-.862
260	149	-.335	.090	-.026	-.809
260	150	-.357	.091	-.031	-.751
260	151	-.465	.096	-.071	-.928
260	152	-.499	.108	-.230	-.961
260	153	-.471	.098	-.218	-1.047
260	154	-.447	.092	-.219	-.939
260	155	-.458	.092	-.238	-.928
260	156	-.299	.143	.074	-.970
260	157	-.287	.136	.063	-.823
260	158	-.330	.155	.033	-1.262
260	159	-.416	.134	.012	-1.058
260	160	-.251	.158	.172	-1.016
260	161	-.357	.137	-.026	-1.148
260	162	-.460	.123	-.022	-1.219
260	163	-.523	.125	-.206	-1.113
260	164	-.482	.117	-.194	-.949
260	165	-.483	.126	-.209	-1.239
260	166	-.218	.071	-.015	-.556
260	167	-.247	.071	-.053	-.569
260	168	-.277	.094	.007	-.858
260	169	-.274	.090	.027	-.761
260	170	-.355	.113	-.063	-.839
260	171	-.373	.110	-.044	-.850
260	172	-.419	.071	-.196	-.809
260	173	-.406	.072	-.172	-.797
260	174	-.500	.075	-.266	-.863
260	201	-.009	.077	.330	-.298
260	202	.103	.098	.484	-.238
260	203	.229	.116	.587	-.125
260	204	.352	.131	.739	-.154
260	205	.443	.144	.895	-.069
260	206	.394	.144	.869	-.152
260	207	.003	.075	.230	-.247
260	208	.154	.100	.483	-.236
260	209	.360	.131	.763	-.130
260	210	.452	.162	.933	-.154
260	211	.507	.162	1.020	-.039
260	212	.415	.149	1.009	-.311
260	213	-.027	.075	.264	-.296
260	214	.073	.104	.431	-.257
260	215	.348	.130	.727	-.049
260	216	.507	.164	.947	.019
260	217	.498	.169	.974	-.029
260	218	.306	.171	.832	-.216
260	219	-.092	.074	.156	-.356
260	220	.076	.100	.467	-.202
260	221	.304	.133	.777	-.066
260	222	.390	.166	1.042	-.098
260	223	.390	.157	1.001	-.063
260	224	.263	.152	.820	-.340
260	225	-.256	.075	.006	-.540
260	226	-.125	.091	.228	-.424
260	227	.230	.127	.806	-.082
260	228	.381	.153	.954	-.054
260	229	.259	.140	.782	-.111
260	230	-.020	.156	.610	-.472
260	231	-.094	.090	.242	-.508
260	232	.168	.123	.595	-.172
260	233	.286	.140	.782	-.134
260	234	.267	.158	.820	-.178
260	235	.216	.145	.699	-.244
260	236	-.065	.079	.285	-.481
260	237	.153	.107	.531	-.228
260	238	.173	.129	.648	-.202
260	239	.251	.128	.730	-.070
260	240	.186	.123	.683	-.170
260	241	-.038	.100	.365	-.507
260	242	.065	.137	.530	-.528
260	243	.185	.135	.708	-.284
260	244	.210	.145	.772	-.390
260	245	.191	.132	.742	-.385
260	246	-.138	.103	.274	-.511
260	247	.044	.110	.484	-.356
260	248	.186	.124	.702	-.190
260	249	.267	.128	.721	-.120
260	250	.193	.137	.711	-.197
260	251	.184	.128	.751	-.279
260	252	-.100	.088	.233	-.381
260	253	.053	.107	.411	-.228
260	254	.192	.114	.769	-.073
260	255	.257	.129	.746	-.022
260	256	.259	.129	.918	-.056
260	257	.184	.131	.751	-.141
260	258	-.207	.099	.310	-.545
260	259	.025	.102	.546	-.322
260	260	.166	.112	.840	-.072
260	261	.244	.118	.723	.006
260	262	.134	.113	.651	-.112
260	263	.103	.086	.523	-.103
260	264	-.160	.075	.153	-.445
260	265	.002	.081	.400	-.240
260	266	.107	.105	.619	-.137
260	267	.207	.101	.661	-.037
260	268	.138	.087	.606	-.079
260	269	.052	.071	.400	-.155
260	270	-.155	.068	.199	-.355
260	271	.038	.087	.395	-.224
260	272	.393	.149	.908	-.043
260	273	.229	.149	.815	-.255
260	274	-.175	.070	.113	-.421
260	275	.001	.088	.402	-.262
260	276	.152	.107	.606	-.146
260	277	.380	.159	.952	-.032
260	278	.325	.151	.929	-.096

APPENDIX A -- PRESSURE DATA: CONFIGURATION A; 1221 BRICKELL BUILDING

WD	TAP	CPMEAN	CPRMS	CPMAX	CPMIN
260	279	.168	.152	.905	-.400
260	280	.130	.099	.565	-.160
260	281	.373	.162	.940	-.008
260	282	-.085	.072	.233	-.418
260	283	.098	.102	.606	-.182
260	284	.316	.140	.816	-.095
260	285	.231	.136	.777	-.137
260	301	-.719	.208	.049	-1.745
260	302	-.548	.191	.082	-1.369
260	303	-.605	.184	.328	-1.544
260	304	-.584	.210	.233	-1.456
260	305	-.393	.131	-.110	-1.083
260	306	-.248	.221	.180	-1.077
260	307	-.305	.061	-.122	-.772
260	308	-.223	.066	-.039	-.705
260	309	-.412	.064	-.202	-.699
260	310	-.349	.063	-.125	-.651
260	311	-.534	.168	.096	-1.234
260	312	-.527	.194	.372	-1.282
260	313	-.331	.290	.223	-1.351
260	314	-.165	.072	.066	-.755
260	315	-.231	.047	-.059	-.512
260	316	-.317	.048	-.158	-.517
260	317	-.547	.188	.227	-1.296
260	318	-.496	.212	.373	-1.323
260	319	-.302	.260	.204	-1.182
260	320	-.190	.104	.048	-.847
260	321	-.303	.057	-.032	-.681
260	322	-.311	.046	-.116	-.603
260	323	-.514	.190	-.000	-1.276
260	324	-.502	.211	.214	-1.383
260	325	-.680	.285	.120	-2.099
260	326	-.535	.243	.209	-1.489
260	327	-.343	.211	.124	-1.196
260	328	-.238	.093	-.009	-.756
260	329	-.333	.063	-.151	-.692
260	330	-.335	.055	-.174	-.636
260	331	-.373	.214	.317	-1.363
260	332	-.373	.188	.273	-1.096
260	333	-.402	.255	.258	-1.346
260	334	-.385	.292	.231	-1.513
260	335	-.356	.280	.181	-1.678
260	336	-.372	.277	.397	-1.644
260	337	-.525	.426	.458	-2.251
260	338	-.071	.167	.298	-1.708
260	339	-.556	.417	.639	-2.336
260	340	-.455	.281	.399	-1.580
260	341	-.459	.350	.429	-1.766
260	342	-.089	.126	.190	-1.277
260	343	-.115	.064	.133	-.522
260	344	-.129	.046	.079	-.272
260	345	-.239	.039	-.034	-.374
260	346	-.279	.040	-.123	-.434
260	347	-.325	.048	-.150	-.529
260	348	-.344	.127	.221	-1.139
260	349	-.396	.149	.161	-1.270
260	350	-.280	.167	.154	-1.005
260	351	-.163	.083	.057	-.559
260	352	-.126	.046	.079	-.389
260	353	-.193	.036	-.048	-.381
260	354	-.223	.039	-.090	-.542
260	355	-.299	.052	-.136	-.541
260	356	-.146	.038	.027	-.325
260	357	-.265	.047	-.075	-.490
260	358	-.190	.049	.012	-.429
260	359	-.194	.048	.004	-.389
260	360	-.262	.137	.155	-.989
260	361	-.313	.151	.144	-1.077
260	362	-.213	.138	.158	-.839
260	363	-.110	.064	.154	-.527
260	364	-.170	.051	.060	-.427
260	365	-.099	.056	.192	-.348
260	366	-.326	.122	-.073	-1.022
260	367	-.265	.082	-.060	-.782
260	368	-.107	.068	.319	-.379
260	369	-.359	.123	-.051	-.873
260	370	-.204	.038	.009	-.382
260	371	-.279	.050	-.079	-.525
260	372	-.430	.319	.407	-1.724
260	373	-.081	.233	.377	-1.631
260	374	-.040	.185	.392	-1.563
260	401	-.386	.072	-.144	-.665
260	402	-.391	.066	-.157	-.727
260	403	-.377	.062	-.175	-.697
260	404	-.426	.061	-.227	-.688
260	405	-.373	.062	-.199	-.666
260	406	-.419	.077	-.157	-.713
260	407	-.379	.065	-.197	-.704
260	408	-.451	.079	-.179	-.740
260	409	-.401	.069	-.159	-.682
260	410	-.396	.066	-.196	-.761
260	411	-.383	.062	-.208	-.730
260	412	-.442	.071	-.267	-1.013
260	413	-.411	.083	-.102	-1.053
260	414	-.408	.072	-.182	-.763
260	415	-.396	.067	-.173	-.695
260	416	-.448	.063	-.246	-.742
260	417	-.410	.066	-.217	-.766
260	418	-.423	.094	-.166	-1.000
260	419	-.420	.093	-.149	-.949
260	420	-.478	.095	-.234	-1.051
260	421	-.439	.090	-.225	-.884
260	422	-.442	.079	-.239	-1.014
260	423	-.387	.063	-.191	-.595
260	424	-.380	.068	-.183	-.815
260	425	-.410	.064	-.157	-.718
260	426	-.401	.065	-.194	-.759
260	427	-.401	.067	-.180	-.727
260	428	-.374	.072	-.154	-.862
260	429	-.438	.065	-.245	-.892
260	430	-.382	.057	-.162	-.639
260	431	-.378	.060	-.211	-.676
260	432	-.391	.058	-.190	-.631
260	433	-.375	.063	-.126	-.844
260	434	-.457	.070	-.125	-1.075
260	435	-.393	.050	-.204	-.545
260	436	-.394	.055	-.236	-.620
260	437	-.388	.055	-.242	-.612
260	438	-.469	.060	-.277	-.708
260	439	-.405	.062	-.194	-.630
260	440	-.399	.066	-.152	-.708
260	441	-.386	.061	-.219	-.787
260	442	-.468	.063	-.298	-.821
260	443	-.406	.061	-.254	-.784
260	444	-.409	.055	-.236	-.620
260	445	-.413	.062	-.210	-.667
260	446	-.504	.070	-.296	-.800
260	447	-.404	.063	-.178	-.623
260	448	-.413	.065	-.205	-.897
260	449	-.419	.069	-.240	-1.066
260	450	-.519	.080	-.312	-.971
260	451	-.472	.093	-.264	-.999
260	452	-.482	.102	-.229	-1.011
260	453	-.478	.124	-.201	-1.157
260	454	-.569	.128	-.275	-1.235
260	455	-.509	.126	-.211	-1.137
260	456	-.335	.130	.045	-.785
260	457	-.285	.105	.024	-.680
260	458	-.366	.102	-.062	-.944
260	459	-.430	.135	-.126	-1.370
260	460	-.197	.147	.230	-1.131
260	461	-.341	.096	-.106	-.717
260	462	-.300	.105	.028	-.782
260	463	-.467	.132	-.171	-1.015
260	464	-.259	.087	.025	-.619
260	465	-.304	.089	-.034	-.720
260	466	-.321	.089	.029	-.778
260	467	-.311	.097	-.037	-.844
260	468	-.408	.133	-.121	-.978
260	469	-.342	.111	-.036	-.875

APPENDIX A -- PRESSURE DATA: CONFIGURATION A; 1221 BRICKELL BUILDING

WD	TAP	CPMEAN	CPRMS	CPMAX	CPMIN
260	470	-.323	.096	-.045	-.835
260	471	-.346	.087	-.097	-.735
260	472	-.405	.082	-.135	-.758
260	501	.281	.145	.966	-.086
260	502	.389	.144	.964	-.006
260	503	-.077	.085	.241	-.349
260	504	-.392	.131	-.100	-.969
260	505	-.307	.084	-.058	-.629
260	506	-.347	.109	-.072	-.780
260	507	-.425	.114	-.120	-.918
260	508	-.291	.105	-.003	-.678
260	509	-.430	.096	-.170	-.831
260	510	-.265	.110	.046	-.792
260	9124	-.487	.071	-.319	-.870
260	9140	-.473	.103	-.236	-1.130
260	9213	-.046	.071	.208	-.280
260	9218	.381	.155	.884	-.217
260	9317	-.562	.177	.199	-1.478
260	9322	-.312	.047	-.100	-.600
260	9348	-.323	.132	.309	-.840
260	9355	-.312	.053	-.156	-.574
270	101	-.397	.066	-.197	-.855
270	102	-.398	.066	-.200	-.851
270	103	-.420	.068	-.237	-.799
270	104	-.394	.063	-.213	-.713
270	105	-.387	.063	-.188	-.695
270	106	-.428	.077	-.221	-1.033
270	107	-.405	.067	-.200	-.705
270	108	-.455	.093	-.227	-1.098
270	109	-.473	.117	-.200	-1.223
270	110	-.425	.089	-.212	-1.116
270	111	-.479	.137	-.189	-1.306
270	112	-.452	.114	-.179	-1.267
270	113	-.431	.088	-.188	-1.008
270	114	-.399	.075	-.211	-.830
270	115	-.399	.071	-.207	-.811
270	116	-.383	.070	-.199	-.787
270	117	-.472	.145	-.172	-1.493
270	118	-.455	.122	-.171	-1.284
270	119	-.433	.087	-.179	-1.198
270	120	-.390	.073	-.136	-.763
270	121	-.388	.066	-.181	-.741
270	122	-.382	.066	-.173	-.744
270	123	-.451	.077	-.241	-.813
270	124	-.440	.079	-.211	-.777
270	125	-.505	.116	-.220	-1.472
270	126	-.495	.107	-.233	-1.289
270	127	-.492	.090	-.260	-1.032
270	128	-.466	.080	-.261	-.815
270	129	-.462	.088	-.223	-.901
270	130	-.473	.097	-.230	-.910
270	131	-.580	.173	-.202	-1.536
270	132	-.582	.170	-.225	-1.459
270	133	-.470	.094	-.234	-.901
270	134	-.479	.101	-.235	-.919
270	135	-.547	.152	-.228	-1.545
270	136	-.446	.089	-.191	-.921
270	137	-.464	.094	-.229	-1.031
270	138	-.449	.088	-.211	-.950
270	139	-.454	.084	-.230	-.907
270	140	-.481	.110	-.182	-1.033
270	141	-.471	.111	-.191	-1.150
270	142	-.470	.113	-.164	-1.123
270	143	-.478	.108	-.168	-1.216
270	144	-.460	.098	-.170	-1.040
270	145	-.456	.090	-.225	-1.018
270	146	-.441	.085	-.207	-.919
270	147	-.450	.079	-.244	-.834
270	148	-.314	.080	-.065	-.784
270	149	-.309	.091	-.035	-.762
270	150	-.331	.102	.023	-.718
270	151	-.452	.107	-.122	-.914
270	152	-.509	.114	-.172	-1.081
270	153	-.481	.113	-.200	-1.077
270	154	-.454	.105	-.190	-.953
270	155	-.460	.104	-.189	-.910
270	156	-.270	.120	.064	-.854
270	157	-.263	.116	.090	-.860
270	158	-.312	.163	.104	-1.216
270	159	-.375	.147	.019	-.995
270	160	-.219	.139	.215	-.940
270	161	-.313	.129	.068	-1.107
270	162	-.445	.129	-.005	-1.066
270	163	-.549	.144	-.140	-1.435
270	164	-.521	.142	-.227	-1.351
270	165	-.523	.146	-.156	-1.321
270	166	-.183	.065	.009	-.512
270	167	-.206	.064	-.020	-.539
270	168	-.233	.093	.033	-.660
270	169	-.245	.098	.093	-.748
270	170	-.295	.083	-.004	-.707
270	171	-.305	.092	.014	-.717
270	172	-.454	.087	-.196	-.972
270	173	-.442	.088	-.174	-.987
270	174	-.535	.090	-.291	-1.167
270	201	.065	.089	.449	-.259
270	202	.190	.109	.618	-.168
270	203	.297	.121	.686	-.069
270	204	.356	.138	.844	-.044
270	205	.385	.145	.873	-.088
270	206	.283	.138	.779	-.207
270	207	.071	.091	.375	-.232
270	208	.248	.118	.684	-.128
270	209	.443	.141	.912	.004
270	210	.485	.160	.996	-.009
270	211	.459	.144	.913	-.020
270	212	.294	.132	.881	-.173
270	213	.051	.089	.358	-.280
270	214	.171	.121	.562	-.228
270	215	.439	.146	.908	.049
270	216	.524	.153	1.044	.119
270	217	.433	.144	.907	.020
270	218	.163	.134	.625	-.247
270	219	-.012	.079	.274	-.243
270	220	.167	.110	.535	-.173
270	221	.393	.143	.863	-.026
270	222	.438	.168	1.025	.006
270	223	.366	.145	.923	-.055
270	224	.203	.134	.696	-.280
270	225	-.213	.077	.232	-.494
270	226	-.047	.092	.396	-.319
270	227	.332	.127	.842	.001
270	228	.412	.139	.854	.030
270	229	.200	.113	.691	-.168
270	230	-.169	.128	.396	-.671
270	231	-.031	.087	.331	-.377
270	232	.256	.120	.657	-.128
270	233	.362	.133	.814	-.003
270	234	.310	.142	.880	-.122
270	235	.164	.114	.650	-.321
270	236	.004	.083	.302	-.309
270	237	.238	.109	.656	-.087
270	238	.255	.127	.702	-.095
270	239	.310	.121	.712	-.029
270	240	.164	.114	.623	-.325
270	241	.043	.089	.404	-.287
270	242	.163	.126	.584	-.225
270	243	.273	.127	.686	-.115
270	244	.279	.137	.784	-.295
270	245	.208	.124	.730	-.336
270	246	-.080	.104	.348	-.466
270	247	.111	.113	.567	-.290
270	248	.272	.136	.705	-.155
270	249	.355	.149	.860	-.127
270	250	.263	.161	.859	-.235
270	251	.220	.143	.724	-.314
270	252	-.058	.087	.284	-.348
270	253	.113	.104	.530	-.199
270	254	.233	.130	.746	-.305
270	255	.339	.143	.939	.013

APPENDIX A -- PRESSURE DATA: CONFIGURATION A; 1221 BRICKELL BUILDING

WD	TAP	CPMEAN	CPRMS	CPMAX	CPMIN
270	256	.286	.139	.840	-.056
270	257	.187	.130	.700	-.217
270	258	-.207	.086	.174	-.568
270	259	.020	.092	.489	-.309
270	260	.162	.106	.682	-.112
270	261	.242	.119	.791	-.033
270	262	.132	.127	.791	-.170
270	263	.095	.102	.537	-.155
270	264	-.158	.080	.173	-.506
270	265	.010	.085	.434	-.259
270	266	.125	.114	.777	-.141
270	267	.230	.109	.783	-.027
270	268	.134	.089	.528	-.081
270	269	.037	.080	.409	-.308
270	270	-.104	.072	.216	-.336
270	271	.112	.106	.639	-.187
270	272	.304	.138	.773	-.113
270	273	.075	.126	.543	-.288
270	274	-.117	.080	.264	-.367
270	275	.070	.097	.537	-.259
270	276	.228	.118	.761	-.130
270	277	.368	.155	.920	-.069
270	278	.260	.142	.821	-.161
270	279	.012	.134	.590	-.458
270	280	.192	.114	.665	-.098
270	281	.323	.140	.911	-.053
270	282	-.030	.086	.442	-.367
270	283	.159	.106	.571	-.293
270	284	.301	.132	.758	-.149
270	285	.156	.125	.595	-.273
270	301	-.960	.269	-.413	-2.599
270	302	-.839	.235	-.089	-1.803
270	303	-.763	.204	-.155	-1.610
270	304	-.774	.227	-.087	-1.730
270	305	-.664	.241	-.054	-1.625
270	306	-.630	.208	.013	-1.434
270	307	-.432	.139	-.071	-1.167
270	308	-.422	.153	.016	-1.151
270	309	-.481	.118	-.028	-1.042
270	310	-.394	.103	-.070	-.868
270	311	-.661	.129	-.223	-1.250
270	312	-.655	.131	-.217	-1.165
270	313	-.732	.194	-.013	-1.534
270	314	-.403	.173	.030	-1.041
270	315	-.337	.114	-.019	-.850
270	316	-.376	.109	.038	-.931
270	317	-.681	.150	-.240	-1.366
270	318	-.648	.151	-.190	-1.380
270	319	-.617	.197	.022	-1.553
270	320	-.423	.191	-.004	-1.194
270	321	-.410	.137	-.017	-1.052
270	322	-.371	.115	-.056	-.991
270	323	-.803	.225	-.257	-1.686
270	324	-.810	.238	-.049	-1.836
270	325	-1.045	.313	-.294	-2.249
270	326	-.838	.245	-.130	-1.784
270	327	-.631	.226	-.014	-1.541
270	328	-.369	.140	-.092	-.947
270	329	-.374	.098	-.133	-.834
270	330	-.348	.078	-.140	-.693
270	331	-.623	.208	-.092	-1.532
270	332	-.612	.169	-.151	-1.258
270	333	-.779	.260	-.008	-1.790
270	334	-.783	.355	.074	-1.966
270	335	-.729	.327	.068	-1.766
270	336	-.760	.279	-.014	-1.748
270	337	-.988	.402	.136	-2.578
270	338	-.201	.256	.206	-1.642
270	339	-.759	.337	.371	-2.231
270	340	-.566	.213	.294	-1.423
270	341	-.631	.251	.248	-1.579
270	342	-.210	.177	.141	-1.349
270	343	-.200	.071	.078	-.908
270	344	-.187	.040	-.004	-.478
270	345	-.277	.036	-.131	-.455
270	346	-.298	.041	-.162	-.544
270	347	-.328	.052	-.163	-.516
270	348	-.403	.126	-.033	-1.099
270	349	-.462	.143	.009	-1.177
270	350	-.327	.169	.069	-1.036
270	351	-.188	.089	.055	-.672
270	352	-.144	.052	.110	-.450
270	353	-.204	.042	-.017	-.477
270	354	-.235	.047	-.085	-.544
270	355	-.299	.062	-.115	-.587
270	356	-.154	.041	.060	-.345
270	357	-.261	.051	-.036	-.500
270	358	-.158	.046	.026	-.366
270	359	-.184	.053	.036	-.493
270	360	-.337	.153	.152	-1.213
270	361	-.390	.176	.127	-1.532
270	362	-.231	.158	.122	-1.190
270	363	-.140	.074	.099	-.778
270	364	-.167	.051	.046	-.471
270	365	-.107	.053	.127	-.304
270	366	-.234	.102	-.041	-.810
270	367	-.238	.089	-.033	-.665
270	368	-.120	.064	.181	-.369
270	369	-.284	.117	-.065	-.881
270	370	-.214	.045	-.032	-.552
270	371	-.285	.059	-.108	-.622
270	372	-.638	.243	.093	-1.870
270	373	-.413	.360	.204	-2.015
270	374	-.328	.310	.202	-2.019
270	401	-.408	.079	-.168	-.738
270	402	-.424	.075	-.200	-.796
270	403	-.408	.069	-.196	-.736
270	404	-.457	.069	-.268	-.758
270	405	-.393	.068	-.199	-.710
270	406	-.446	.085	-.188	-.798
270	407	-.399	.070	-.207	-.712
270	408	-.483	.091	-.188	-.869
270	409	-.422	.074	-.193	-.724
270	410	-.411	.069	-.204	-.752
270	411	-.399	.066	-.194	-.717
270	412	-.459	.077	-.245	-.872
270	413	-.459	.116	-.087	-.964
270	414	-.448	.095	-.138	-1.080
270	415	-.431	.080	-.194	-.952
270	416	-.478	.075	-.273	-.969
270	417	-.445	.084	-.193	-1.034
270	418	-.481	.133	-.104	-1.316
270	419	-.498	.130	-.158	-1.239
270	420	-.563	.122	-.256	-1.234
270	421	-.531	.115	-.236	-1.140
270	422	-.507	.098	-.260	-1.124
270	423	-.415	.099	-.092	-.866
270	424	-.404	.091	-.024	-.811
270	425	-.431	.085	-.149	-.801
270	426	-.422	.073	-.225	-.753
270	427	-.417	.076	-.163	-.743
270	428	-.412	.077	-.171	-.797
270	429	-.388	.085	-.044	-.758
270	430	-.398	.091	-.111	-.818
270	431	-.395	.075	-.144	-.784
270	432	-.393	.068	-.184	-.741
270	433	-.384	.072	-.044	-.685
270	434	-.389	.076	-.126	-.711
270	435	-.387	.081	-.151	-.855
270	436	-.385	.073	-.153	-.671
270	437	-.387	.065	-.161	-.619
270	438	-.379	.064	-.157	-.641
270	439	-.378	.070	-.071	-.725
270	440	-.394	.074	-.113	-.697
270	441	-.397	.068	-.208	-.651
270	442	-.397	.067	-.192	-.643
270	443	-.400	.064	-.205	-.647
270	444	-.401	.070	-.172	-.757
270	445	-.419	.081	-.181	-.790
270	446	-.433	.086	-.169	-.866

APPENDIX A -- PRESSURE DATA: CONFIGURATION A; 1221 BRICKELL BUILDING

WD	TAP	CPMEAN	CPRMS	CPMAX	CPMIN
270	447	-.371	.072	-.132	-.635
270	448	-.385	.070	-.137	-.713
270	449	-.409	.073	-.198	-.758
270	450	-.444	.099	-.230	-.979
270	451	-.470	.113	-.218	-1.034
270	452	-.495	.120	-.198	-1.158
270	453	-.492	.136	-.193	-1.218
270	454	-.489	.132	-.169	-1.258
270	455	-.461	.129	-.115	-1.044
270	456	-.251	.116	.018	-.858
270	457	-.285	.091	.009	-.741
270	458	-.293	.087	-.026	-.702
270	459	-.300	.120	-.006	-1.116
270	460	-.191	.115	.165	-.962
270	461	-.245	.090	.020	-.631
270	462	-.191	.099	.114	-.622
270	463	-.255	.105	-.037	-.772
270	464	-.188	.070	.052	-.536
270	465	-.224	.074	-.055	-.654
270	466	-.264	.083	.009	-.741
270	467	-.225	.074	-.059	-.588
270	468	-.256	.107	.025	-.845
270	469	-.255	.103	-.043	-.720
270	470	-.265	.109	.031	-.673
270	471	-.223	.082	.071	-.575
270	472	-.340	.085	-.049	-.744
270	501	.187	.134	.875	-.217
270	502	.408	.146	.956	.038
270	503	.027	.095	.540	-.281
270	504	-.253	.109	-.014	-.811
270	505	-.251	.085	.034	-.612
270	506	-.248	.108	.053	-.731
270	507	-.273	.109	-.014	-.730
270	508	-.244	.099	.118	-.558
270	509	-.332	.106	-.006	-.788
270	510	-.200	.091	.031	-.575
270	9124	-.433	.072	-.213	-.718
270	9140	-.478	.106	-.164	-.978
270	9213	.036	.090	.369	-.242
270	9218	.270	.135	.847	-.183
270	9317	-.643	.160	-.211	-1.612
270	9322	-.373	.116	-.071	-1.086
270	9348	-.395	.129	.018	-1.102
270	9355	-.320	.063	-.159	-.868
280	101	-.437	.101	-.202	-1.472
280	102	-.444	.109	-.204	-1.562
280	103	-.466	.110	-.198	-1.330
280	104	-.429	.084	-.204	-1.013
280	105	-.429	.084	-.200	-.865
280	106	-.485	.135	-.145	-1.399
280	107	-.460	.104	-.196	-1.016
280	108	-.508	.161	-.084	-1.334
280	109	-.519	.188	-.118	-1.810
280	110	-.469	.124	-.052	-1.267
280	111	-.525	.216	-.087	-1.903
280	112	-.498	.177	-.091	-1.626
280	113	-.478	.149	-.088	-1.327
280	114	-.452	.123	-.133	-1.195
280	115	-.448	.111	-.166	-1.097
280	116	-.432	.108	-.163	-1.092
280	117	-.512	.217	-.019	-2.084
280	118	-.495	.182	.018	-1.844
280	119	-.472	.141	-.096	-1.456
280	120	-.436	.112	-.137	-1.307
280	121	-.429	.091	-.195	-.948
280	122	-.422	.090	-.176	-.804
280	123	-.490	.098	-.221	-1.023
280	124	-.477	.099	-.208	-1.020
280	125	-.531	.159	-.134	-1.407
280	126	-.516	.137	-.152	-1.247
280	127	-.524	.126	-.099	-1.327
280	128	-.504	.112	-.211	-1.097
280	129	-.511	.114	-.230	-1.144
280	130	-.517	.120	-.226	-1.167
280	131	-.605	.179	-.205	-1.532
280	132	-.608	.177	-.204	-1.477
280	133	-.515	.118	-.232	-1.147
280	134	-.520	.121	-.219	-1.148
280	135	-.580	.154	-.230	-1.343
280	136	-.496	.117	-.228	-1.065
280	137	-.534	.143	-.143	-1.657
280	138	-.496	.127	-.157	-2.107
280	139	-.492	.120	-.209	-1.920
280	140	-.457	.129	-.091	-1.025
280	141	-.449	.123	-.095	-.996
280	142	-.460	.129	-.114	-1.015
280	143	-.484	.134	-.089	-1.044
280	144	-.489	.131	.026	-1.322
280	145	-.528	.130	-.159	-1.442
280	146	-.508	.120	-.133	-1.648
280	147	-.512	.108	-.223	-1.415
280	148	-.296	.090	.031	-.757
280	149	-.260	.095	.086	-.628
280	150	-.265	.112	.149	-.697
280	151	-.404	.123	.010	-.952
280	152	-.508	.125	-.036	-1.039
280	153	-.519	.130	-.191	-1.183
280	154	-.480	.118	-.181	-1.378
280	155	-.480	.116	-.166	-1.323
280	156	-.210	.089	.098	-.668
280	157	-.204	.110	.189	-.644
280	158	-.242	.162	.168	-1.423
280	159	-.315	.159	.106	-1.078
280	160	-.159	.117	.251	-.733
280	161	-.271	.144	.182	-1.350
280	162	-.429	.163	.087	-1.212
280	163	-.574	.170	-.142	-1.392
280	164	-.548	.166	-.156	-1.599
280	165	-.539	.164	-.182	-1.316
280	166	-.164	.060	.033	-.486
280	167	-.177	.057	.014	-.467
280	168	-.193	.091	.151	-.785
280	169	-.210	.106	.184	-.861
280	170	-.267	.085	.102	-.713
280	171	-.261	.102	.121	-.672
280	172	-.518	.119	-.199	-1.285
280	173	-.505	.121	-.129	-1.280
280	174	-.599	.120	-.261	-1.337
280	201	.150	.114	.511	-.212
280	202	.271	.135	.690	-.138
280	203	.342	.142	.761	-.062
280	204	.373	.139	.786	-.058
280	205	.349	.137	.770	-.112
280	206	.221	.125	.676	-.184
280	207	.160	.105	.551	-.204
280	208	.342	.126	.749	-.054
280	209	.499	.143	.951	.034
280	210	.521	.150	1.045	.023
280	211	.411	.139	.926	-.052
280	212	.230	.119	.622	-.185
280	213	.099	.102	.465	-.240
280	214	.292	.122	.652	-.104
280	215	.491	.147	.905	.003
280	216	.527	.154	1.111	.075
280	217	.375	.141	.903	-.025
280	218	.147	.122	.600	-.227
280	219	.031	.091	.400	-.321
280	220	.210	.112	.658	-.124
280	221	.408	.140	.816	-.015
280	222	.438	.145	.894	.058
280	223	.284	.129	.722	-.102
280	224	.112	.111	.533	-.231
280	225	-.205	.091	.255	-.659
280	226	.058	.100	.564	-.291
280	227	.367	.139	.902	-.042
280	228	.423	.145	1.027	.030
280	229	.139	.111	.565	-.191
280	230	-.162	.116	.263	-.770
280	231	.016	.107	.503	-.426
280	232	.285	.132	.810	-.147

APPENDIX A -- PRESSURE DATA: CONFIGURATION A: 1221 BRICKELL BUILDING

WD	TAP	CPMEAN	CPRMS	CPMAX	CPMIN
280	233	.358	.143	.866	-.077
280	234	.324	.137	.844	-.116
280	235	.087	.112	.553	-.357
280	236	.037	.098	.560	-.310
280	237	.260	.126	.785	-.117
280	238	.309	.133	.805	-.107
280	239	.292	.129	.769	-.104
280	240	.102	.105	.513	-.251
280	241	.057	.109	.598	-.392
280	242	.240	.133	.901	-.195
280	243	.289	.137	.912	-.161
280	244	.304	.137	.801	-.170
280	245	.161	.113	.610	-.276
280	246	.021	.113	.491	-.549
280	247	.163	.129	.693	-.497
280	248	.297	.144	.844	-.215
280	249	.342	.144	.868	-.186
280	250	.260	.134	.817	-.309
280	251	.150	.123	.629	-.392
280	252	-.045	.103	.377	-.473
280	253	.117	.124	.645	-.255
280	254	.289	.139	.823	-.072
280	255	.312	.141	.838	-.078
280	256	.241	.129	.676	-.142
280	257	.103	.114	.539	-.271
280	258	-.123	.086	.272	-.437
280	259	.038	.102	.500	-.302
280	260	.186	.118	.633	-.124
280	261	.232	.120	.700	-.060
280	262	.150	.105	.616	-.159
280	263	.043	.084	.395	-.207
280	264	-.153	.079	.159	-.487
280	265	.006	.085	.375	-.271
280	266	.182	.109	.641	-.056
280	267	.216	.108	.736	-.083
280	268	.097	.082	.649	-.074
280	269	-.022	.074	.378	-.307
280	270	-.053	.087	.293	-.406
280	271	.139	.110	.570	-.204
280	272	.227	.126	.782	-.140
280	273	-.004	.116	.543	-.398
280	274	-.090	.089	.263	-.511
280	275	.121	.109	.539	-.195
280	276	.280	.127	.772	-.058
280	277	.328	.136	.771	-.031
280	278	.195	.124	.661	-.189
280	279	-.043	.125	.390	-.505
280	280	.270	.118	.714	-.104
280	281	.324	.133	.821	-.067
280	282	.023	.097	.371	-.355

WD	TAP	CPMEAN	CPRMS	CPMAX	CPMIN
280	283	.196	.122	.770	-.164
280	284	.275	.138	.852	-.104
280	285	.090	.120	.609	-.279
280	301	-.609	.190	-.159	-1.755
280	302	-.637	.197	-.199	-1.625
280	303	-.554	.144	-.226	-1.836
280	304	-.578	.159	-.198	-2.111
280	305	-.614	.184	-.100	-1.449
280	306	-.576	.145	-.216	-1.425
280	307	-.550	.175	.048	-1.360
280	308	-.556	.160	-.017	-1.375
280	309	-.509	.170	.051	-1.486
280	310	-.507	.181	.022	-1.473
280	311	-.563	.140	-.149	-1.167
280	312	-.576	.143	-.169	-1.240
280	313	-.587	.155	-.173	-1.296
280	314	-.549	.171	.038	-1.332
280	315	-.494	.181	.020	-1.351
280	316	-.495	.197	.048	-1.765
280	317	-.617	.138	-.190	-1.479
280	318	-.580	.137	-.156	-1.501
280	319	-.613	.157	-.105	-1.431
280	320	-.549	.182	.144	-1.382
280	321	-.532	.193	.097	-1.756
280	322	-.489	.200	.065	-1.651
280	323	-.758	.216	-.290	-1.967
280	324	-.761	.226	-.265	-2.048
280	325	-.863	.284	-.262	-2.425
280	326	-.776	.217	-.256	-1.992
280	327	-.723	.192	-.200	-1.536
280	328	-.533	.166	-.129	-1.113
280	329	-.489	.152	-.116	-1.034
280	330	-.426	.125	-.093	-1.068
280	331	-.686	.192	-.033	-1.807
280	332	-.654	.158	-.081	-1.410
280	333	-.837	.217	-.037	-1.832
280	334	-.842	.294	.026	-2.138
280	335	-.773	.263	-.070	-2.000
280	336	-.834	.242	-.189	-1.990
280	337	-.934	.299	-.051	-2.837
280	338	-.562	.405	.269	-2.016
280	339	-.754	.287	-.084	-2.749
280	340	-.640	.192	-.155	-1.334
280	341	-.713	.210	-.030	-1.495
280	342	-.425	.240	.036	-1.476
280	343	-.256	.096	.211	-.807
280	344	-.222	.054	-.011	-.464
280	345	-.295	.053	-.116	-.529
280	346	-.298	.056	-.115	-.528
280	347	-.324	.064	-.144	-.743

WD	TAP	CPMEAN	CPRMS	CPMAX	CPMIN
280	348	-.459	.145	-.062	-1.250
280	349	-.523	.160	-.085	-1.335
280	350	-.420	.187	.140	-1.335
280	351	-.243	.110	.002	-.900
280	352	-.171	.070	.104	-.541
280	353	-.211	.053	.052	-.484
280	354	-.231	.056	-.001	-.499
280	355	-.297	.077	-.019	-.710
280	356	-.161	.054	.077	-.416
280	357	-.250	.058	-.046	-.560
280	358	-.152	.061	.106	-.689
280	359	-.177	.065	.067	-.622
280	360	-.389	.178	.039	-1.511
280	361	-.446	.201	.002	-1.569
280	362	-.301	.181	.102	-1.352
280	363	-.173	.095	.119	-.762
280	364	-.160	.061	.039	-.582
280	365	-.132	.052	.109	-.386
280	366	-.166	.060	.043	-.591
280	367	-.180	.058	.030	-.527
280	368	-.142	.053	.080	-.385
280	369	-.200	.058	-.008	-.553
280	370	-.212	.054	-.008	-.486
280	371	-.275	.071	-.050	-.602
280	372	-.687	.207	-.087	-2.013
280	373	-.716	.337	.268	-2.084
280	374	-.609	.307	.253	-2.036
280	401	-.426	.092	-.190	-1.192
280	402	-.420	.077	-.221	-.965
280	403	-.403	.068	-.220	-.780
280	404	-.450	.070	-.238	-.766
280	405	-.411	.082	-.133	-1.033
280	406	-.464	.096	-.215	-1.199
280	407	-.418	.083	-.149	-1.038
280	408	-.495	.092	-.214	-1.015
280	409	-.433	.079	-.202	-.985
280	410	-.431	.076	-.200	-.784
280	411	-.422	.076	-.198	-.826
280	412	-.481	.086	-.180	-.910
280	413	-.502	.125	-.122	-1.187
280	414	-.469	.097	-.198	-1.088
280	415	-.451	.084	-.244	-.951
280	416	-.498	.087	-.273	-1.024
280	417	-.469	.103	-.219	-1.027
280	418	-.536	.162	-.044	-1.608
280	419	-.548	.147	-.189	-1.274
280	420	-.608	.137	-.317	-1.402
280	421	-.568	.136	-.258	-1.450
280	422	-.545	.147	-.156	-1.554
280	423	-.465	.137	-.010	-1.209

APPENDIX A -- PRESSURE DATA: CONFIGURATION A; 1221 BRICKELL BUILDING

WD	TAP	CPMEAN	CPRMS	CPMAX	CPMIN
280	424	-.445	.121	-.064	-1.072
280	425	-.456	.103	-.128	-1.042
280	426	-.433	.088	-.201	-.996
280	427	-.425	.101	-.147	-1.090
280	428	-.435	.109	-.127	-1.107
280	429	-.427	.126	-.056	-1.038
280	430	-.412	.119	-.061	-1.146
280	431	-.396	.088	-.102	-1.066
280	432	-.390	.080	-.148	-.932
280	433	-.394	.096	-.127	-1.076
280	434	-.411	.107	-.018	-1.054
280	435	-.414	.116	-.043	-.909
280	436	-.396	.104	-.073	-.894
280	437	-.375	.084	-.112	-.760
280	438	-.358	.070	-.140	-.674
280	439	-.367	.082	-.090	-.794
280	440	-.396	.098	-.094	-.848
280	441	-.394	.089	-.183	-.724
280	442	-.391	.085	-.180	-.698
280	443	-.382	.075	-.188	-.667
280	444	-.398	.072	-.216	-.675
280	445	-.422	.083	-.168	-.785
280	446	-.447	.091	-.206	-.963
280	447	-.359	.089	-.095	-1.007
280	448	-.365	.084	-.123	-1.021
280	449	-.397	.088	-.171	-.913
280	450	-.457	.122	-.126	-1.206
280	451	-.480	.132	-.171	-1.176
280	452	-.486	.128	-.165	-1.119
280	453	-.408	.123	-.090	-1.095
280	454	-.401	.119	-.098	-1.045
280	455	-.328	.117	.091	-.853
280	456	-.265	.128	.076	-.810
280	457	-.308	.105	.048	-.947
280	458	-.328	.117	.120	-1.197
280	459	-.219	.093	.017	-1.064
280	460	-.202	.090	.061	-.690
280	461	-.155	.057	.076	-.469
280	462	-.130	.057	.259	-.457
280	463	-.167	.052	-.009	-.447
280	464	-.157	.057	.069	-.493
280	465	-.185	.056	.010	-.447
280	466	-.235	.083	.038	-.698
280	467	-.187	.055	.004	-.447
280	468	-.173	.058	-.029	-.564
280	469	-.173	.064	.069	-.625
280	470	-.176	.074	.104	-.644
280	471	-.184	.063	.003	-.510
280	472	-.306	.089	-.006	-.751
280	501	.155	.125	.707	-.225

WD	TAP	CPMEAN	CPRMS	CPMAX	CPMIN
280	502	.455	.168	1.092	.065
280	503	.074	.115	.668	-.201
280	504	-.179	.067	.025	-.606
280	505	-.214	.084	.067	-.604
280	506	-.166	.069	.092	-.530
280	507	-.184	.078	.005	-.562
280	508	-.204	.096	.076	-.682
280	509	-.221	.078	.048	-.539
280	510	-.187	.067	.055	-.457
280	9124	-.459	.100	-.150	-.991
280	9140	-.441	.112	-.134	-.816
280	9213	.087	.096	.460	-.263
280	9218	.211	.117	.679	-.146
280	9317	-.585	.137	-.201	-1.335
280	9322	-.487	.198	.194	-1.454
280	9348	-.481	.137	-.087	-1.156
280	9355	-.321	.082	-.061	-.731
290	101	-.610	.220	-.191	-1.842
290	102	-.648	.226	-.098	-1.678
290	103	-.618	.207	.081	-1.506
290	104	-.574	.190	-.192	-1.932
290	105	-.556	.179	-.148	-1.938
290	106	-.535	.186	-.036	-1.754
290	107	-.587	.180	.005	-1.352
290	108	-.481	.181	.094	-1.557
290	109	-.475	.194	.072	-1.503
290	110	-.513	.175	-.041	-1.492
290	111	-.468	.215	.093	-1.890
290	112	-.451	.189	.141	-1.279
290	113	-.523	.183	.089	-1.461
290	114	-.567	.171	-.103	-1.407
290	115	-.565	.160	-.184	-1.358
290	116	-.545	.154	-.192	-1.224
290	117	-.456	.227	.079	-1.817
290	118	-.445	.200	.159	-1.388
290	119	-.498	.200	.033	-1.331
290	120	-.544	.189	.022	-1.685
290	121	-.539	.168	-.067	-1.691
290	122	-.529	.162	-.108	-1.685
290	123	-.562	.149	-.016	-1.474
290	124	-.539	.144	-.106	-1.233
290	125	-.444	.170	.036	-1.280
290	126	-.443	.161	.061	-1.274
290	127	-.508	.172	.139	-1.278
290	128	-.568	.165	.192	-1.428
290	129	-.567	.153	-.136	-1.409
290	130	-.575	.173	-.148	-1.706
290	131	-.550	.160	-.120	-1.382
290	132	-.545	.150	-.127	-1.325
290	133	-.591	.164	-.077	-1.393

WD	TAP	CPMEAN	CPRMS	CPMAX	CPMIN
290	134	-.588	.165	-.060	-1.490
290	135	-.602	.166	-.099	-1.495
290	136	-.590	.184	-.077	-1.721
290	137	-.630	.244	.050	-1.934
290	138	-.544	.225	-.003	-2.661
290	139	-.513	.205	-.076	-2.415
290	140	-.337	.117	.036	-1.025
290	141	-.312	.121	-.005	-.858
290	142	-.312	.138	.035	-.894
290	143	-.366	.166	.056	-1.220
290	144	-.424	.191	.223	-1.265
290	145	-.515	.197	.100	-1.496
290	146	-.520	.175	-.070	-1.521
290	147	-.527	.155	-.083	-1.358
290	148	-.261	.093	.050	-.972
290	149	-.212	.089	.199	-.705
290	150	-.193	.112	.239	-.742
290	151	-.294	.145	.134	-.864
290	152	-.408	.156	.034	-1.073
290	153	-.426	.148	-.044	-1.434
290	154	-.384	.133	-.098	-1.302
290	155	-.385	.131	-.069	-1.301
290	156	-.179	.082	.213	-.624
290	157	-.161	.087	.254	-.579
290	158	-.183	.120	.223	-.998
290	159	-.267	.146	.164	-1.155
290	160	-.122	.082	.221	-.598
290	161	-.286	.180	.109	-1.342
290	162	-.332	.165	.144	-1.231
290	163	-.398	.179	.035	-1.421
290	164	-.371	.170	-.019	-1.637
290	165	-.364	.170	-.008	-1.771
290	166	-.153	.060	.099	-.511
290	167	-.163	.059	.116	-.494
290	168	-.200	.110	.096	-1.075
290	169	-.218	.124	.098	-1.005
290	170	-.240	.093	.172	-.839
290	171	-.216	.101	.254	-.978
290	172	-.564	.222	.083	-2.066
290	173	-.544	.215	.155	-1.762
290	174	-.514	.190	.017	-1.882
290	201	.238	.128	.691	-.219
290	202	.354	.142	.823	-.120
290	203	.389	.141	.833	-.048
290	204	.340	.133	.811	-.118
290	205	.276	.126	.707	-.157
290	206	.145	.110	.537	-.219
290	207	.217	.125	.617	-.173
290	208	.415	.141	.824	-.060
290	209	.532	.157	1.025	-.006

APPENDIX A -- PRESSURE DATA: CONFIGURATION A; 1221 BRICKELL BUILDING

WD	TAP	CPMEAN	CPRMS	CPMAX	CPMIN
290	210	.496	.154	.938	-.043
290	211	.349	.131	.694	-.127
290	212	.183	.099	.499	-.306
290	213	.157	.124	.597	-.352
290	214	.360	.139	.824	-.127
290	215	.537	.155	1.078	-.064
290	216	.487	.147	1.018	-.227
290	217	.308	.122	.719	-.486
290	218	.086	.103	.450	-.707
290	219	.017	.125	.472	-.492
290	220	.195	.138	.673	-.354
290	221	.383	.159	.882	-.199
290	222	.403	.155	.954	-.145
290	223	.245	.130	.678	-.262
290	224	.075	.114	.506	-.403
290	225	-.216	.102	.159	-.757
290	226	.048	.115	.552	-.410
290	227	.347	.157	.983	-.073
290	228	.403	.163	1.153	-.173
290	229	.126	.121	.703	-.368
290	230	-.161	.116	.325	-.696
290	231	-.002	.131	.555	-.433
290	232	.265	.152	.810	-.223
290	233	.340	.163	.877	-.208
290	234	.311	.157	.849	-.220
290	235	.081	.134	.597	-.530
290	236	-.021	.123	.571	-.466
290	237	.194	.152	.929	-.343
290	238	.251	.156	1.026	-.328
290	239	.249	.151	1.002	-.405
290	240	.090	.133	.558	-.356
290	241	-.026	.129	.562	-.510
290	242	.155	.155	.729	-.685
290	243	.226	.162	.772	-.601
290	244	.233	.164	.788	-.446
290	245	.110	.137	.580	-.606
290	246	-.113	.145	.366	-.914
290	247	.007	.162	.529	-.741
290	248	.169	.184	.907	-.692
290	249	.260	.196	.929	-.658
290	250	.206	.185	.777	-.869
290	251	.105	.162	.678	-.945
290	252	-.128	.108	.343	-.557
290	253	.013	.130	.554	-.510
290	254	.170	.159	.780	-.750
290	255	.256	.182	1.113	-.457
290	256	.193	.158	.648	-.552
290	257	.073	.138	.477	-.585
290	258	-.128	.072	.164	-.521
290	259	-.003	.089	.427	-.279
290	260	.127	.113	.619	-.142
290	261	.207	.135	.778	-.135
290	262	.147	.130	.677	-.299
290	263	.047	.100	.462	-.331
290	264	-.112	.073	.185	-.410
290	265	.003	.076	.408	-.204
290	266	.148	.107	.772	-.117
290	267	.202	.116	.976	-.092
290	268	.104	.096	.589	-.121
290	269	-.022	.079	.371	-.260
290	270	-.095	.115	.403	-.555
290	271	.116	.126	.667	-.341
290	272	.199	.131	.719	-.314
290	273	-.022	.117	.421	-.605
290	274	-.123	.107	.288	-.677
290	275	.087	.120	.628	-.248
290	276	.246	.143	.903	-.128
290	277	.304	.152	.837	-.153
290	278	.178	.131	.662	-.284
290	279	-.058	.127	.544	-.630
290	280	.246	.141	1.101	-.174
290	281	.294	.150	1.382	-.229
290	282	-.014	.127	.579	-.641
290	283	.180	.146	.686	-.299
290	284	.273	.151	.799	-.276
290	285	.087	.136	.673	-.524
290	301	-.460	.125	-.188	-1.393
290	302	-.471	.129	-.187	-1.323
290	303	-.427	.096	-.144	-.904
290	304	-.439	.099	-.147	-.997
290	305	-.474	.122	-.172	-1.118
290	306	-.460	.111	-.196	-1.077
290	307	-.489	.141	-.060	-1.418
290	308	-.524	.167	-.017	-1.780
290	309	-.517	.166	.016	-1.438
290	310	-.526	.193	.057	-1.617
290	311	-.450	.116	-.164	-1.211
290	312	-.459	.118	-.138	-1.223
290	313	-.476	.131	-.138	-1.282
290	314	-.486	.165	-.064	-1.501
290	315	-.517	.190	.039	-1.451
290	316	-.522	.220	.029	-1.697
290	317	-.557	.139	-.200	-1.784
290	318	-.518	.136	-.191	-1.802
290	319	-.552	.155	-.155	-1.427
290	320	-.540	.182	.029	-1.483
290	321	-.569	.209	.073	-1.753
290	322	-.534	.225	.043	-1.981
290	323	-.658	.182	-.214	-1.915
290	324	-.659	.189	-.219	-1.983
290	325	-.723	.233	-.228	-2.495
290	326	-.671	.198	-.193	-2.063
290	327	-.659	.180	-.145	-1.526
290	328	-.539	.154	-.104	-1.243
290	329	-.497	.147	-.107	-1.055
290	330	-.428	.129	-.078	-.946
290	331	-.616	.190	-.111	-2.437
290	332	-.583	.164	-.095	-1.736
290	333	-.723	.213	-.115	-1.876
290	334	-.698	.246	-.109	-2.000
290	335	-.683	.232	-.134	-1.995
290	336	-.772	.231	-.185	-2.264
290	337	-.928	.314	.001	-2.312
290	338	-.566	.339	.282	-2.087
290	339	-.766	.310	-.005	-3.192
290	340	-.639	.206	-.057	-1.543
290	341	-.684	.233	-.053	-1.583
290	342	-.399	.209	-.025	-1.465
290	343	-.280	.092	.174	-.914
290	344	-.245	.064	-.007	-.702
290	345	-.299	.067	-.070	-.773
290	346	-.287	.072	-.042	-.640
290	347	-.302	.082	-.060	-.656
290	348	-.477	.148	-.099	-1.443
290	349	-.529	.159	-.053	-1.481
290	350	-.417	.171	.002	-1.303
290	351	-.274	.112	.016	-1.024
290	352	-.187	.074	.082	-.559
290	353	-.204	.057	.051	-.607
290	354	-.204	.055	.002	-.678
290	355	-.241	.066	-.014	-.610
290	356	-.140	.049	.082	-.380
290	357	-.204	.050	.035	-.477
290	358	-.140	.055	.055	-.637
290	359	-.168	.064	.078	-.573
290	360	-.447	.189	.032	-2.129
290	361	-.497	.205	.011	-1.827
290	362	-.353	.174	.050	-1.358
290	363	-.184	.093	.163	-.873
290	364	-.149	.060	.072	-.526
290	365	-.124	.056	.136	-.512
290	366	-.145	.058	.086	-.555
290	367	-.160	.052	.087	-.424
290	368	-.135	.052	.122	-.438
290	369	-.176	.051	.013	-.420
290	370	-.181	.055	.070	-.474
290	371	-.217	.064	.045	-.572
290	372	-.682	.249	-.009	-2.488
290	373	-.681	.304	.124	-1.920
290	374	-.597	.284	.080	-1.945

APPENDIX A -- PRESSURE DATA: CONFIGURATION A: 1221 BRICKELL BUILDING

WD	TAP	CPMEAN	CPRMS	CPMAX	CPMIN
290	401	-.378	.077	-.167	-.691
290	402	-.399	.076	-.178	-.801
290	403	-.394	.075	-.173	-.676
290	404	-.444	.081	-.231	-.766
290	405	-.392	.082	-.147	-.851
290	406	-.413	.081	-.193	-.812
290	407	-.406	.085	-.152	-.875
290	408	-.458	.098	-.214	-1.230
290	409	-.408	.085	-.201	-.941
290	410	-.414	.083	-.194	-.942
290	411	-.416	.088	-.173	-.869
290	412	-.486	.103	-.174	-1.029
290	413	-.473	.122	-.191	-1.339
290	414	-.447	.092	-.237	-1.220
290	415	-.441	.093	-.238	-1.085
290	416	-.498	.114	-.245	-1.280
290	417	-.487	.137	-.073	-1.276
290	418	-.530	.150	-.081	-1.340
290	419	-.546	.143	-.171	-1.419
290	420	-.591	.144	-.207	-1.315
290	421	-.543	.160	-.114	-1.518
290	422	-.523	.172	.101	-1.379
290	423	-.448	.125	-.097	-1.173
290	424	-.433	.106	-.171	-1.087
290	425	-.421	.091	-.132	-1.015
290	426	-.423	.108	-.080	-.947
290	427	-.433	.136	.004	-1.195
290	428	-.450	.147	.036	-1.120
290	429	-.421	.118	-.097	-1.020
290	430	-.384	.107	-.080	-1.178
290	431	-.377	.078	-.118	-.799
290	432	-.391	.103	-.138	-1.205
290	433	-.405	.130	-.074	-1.333
290	434	-.422	.139	-.066	-1.200
290	435	-.410	.114	-.066	-.836
290	436	-.393	.103	-.053	-.914
290	437	-.361	.078	-.135	-.773
290	438	-.376	.098	-.085	-.907
290	439	-.399	.125	-.012	-.977
290	440	-.402	.134	-.069	-.943
290	441	-.381	.105	-.140	-.962
290	442	-.378	.099	-.137	-.814
290	443	-.359	.086	-.152	-.782
290	444	-.376	.093	-.152	-.874
290	445	-.398	.116	-.076	-1.047
290	446	-.416	.125	-.064	-1.129
290	447	-.341	.116	-.081	-1.004
290	448	-.359	.129	-.032	-1.077
290	449	-.368	.118	-.142	-1.184
290	450	-.401	.123	-.135	-1.065

WD	TAP	CPMEAN	CPRMS	CPMAX	CPMIN
290	451	-.393	.137	-.135	-1.164
290	452	-.392	.127	-.084	-.999
290	453	-.297	.107	.043	-1.194
290	454	-.300	.104	.015	-1.158
290	455	-.266	.100	.040	-.735
290	456	-.236	.102	.058	-.862
290	457	-.290	.116	.007	-1.372
290	458	-.326	.141	-.004	-1.650
290	459	-.169	.071	.162	-.551
290	460	-.154	.072	.254	-.673
290	461	-.138	.054	.178	-.383
290	462	-.136	.054	.195	-.421
290	463	-.143	.052	.064	-.424
290	464	-.157	.055	.136	-.491
290	465	-.155	.055	.102	-.426
290	466	-.211	.093	.159	-.959
290	467	-.157	.054	.097	-.443
290	468	-.137	.047	.023	-.392
290	469	-.139	.048	.063	-.438
290	470	-.146	.051	.131	-.394
290	471	-.166	.058	.048	-.639
290	472	-.192	.087	.124	-.881
290	501	.178	.141	1.001	-.288
290	502	.475	.167	1.158	.012
290	503	.102	.133	.685	-.263
290	504	-.143	.049	.047	-.365
290	505	-.197	.070	.065	-.556
290	506	-.134	.058	.114	-.470
290	507	-.152	.059	.107	-.454
290	508	-.179	.067	.035	-.508
290	509	-.172	.068	.072	-.518
290	510	-.184	.063	.026	-.480
290	9124	-.558	.151	.166	-1.546
290	9140	-.343	.116	-.036	-.996
290	9213	.147	.124	.514	-.282
290	9218	.155	.106	.483	-.243
290	9317	-.515	.136	-.199	-1.442
290	9322	-.534	.226	.060	-1.692
290	9348	-.506	.160	-.086	-1.481
290	9355	-.261	.073	.007	-.575
300	101	-.801	.295	-.060	-2.051
300	102	-.731	.233	.002	-1.825
300	103	-.470	.222	.046	-1.465
300	104	-.768	.257	-.163	-2.218
300	105	-.746	.236	-.241	-2.243
300	106	-.339	.119	-.003	-1.027
300	107	-.560	.235	.093	-1.493
300	108	-.315	.090	-.065	-.855
300	109	-.324	.090	.091	-.790
300	110	-.287	.145	.027	-1.099

WD	TAP	CPMEAN	CPRMS	CPMAX	CPMIN
300	111	-.293	.076	.030	-.788
300	112	-.259	.087	.048	-.812
300	113	-.261	.154	.075	-1.010
300	114	-.500	.258	.168	-1.369
300	115	-.632	.185	.171	-1.567
300	116	-.613	.167	.105	-1.699
300	117	-.276	.093	-.012	-.960
300	118	-.242	.102	.042	-.972
300	119	-.234	.156	.150	-1.094
300	120	-.382	.275	.261	-1.536
300	121	-.556	.260	.315	-1.893
300	122	-.573	.230	.211	-1.787
300	123	-.428	.219	.208	-1.415
300	124	-.422	.196	.220	-1.318
300	125	-.288	.102	.006	-1.216
300	126	-.253	.102	.066	-1.167
300	127	-.249	.134	.164	-1.034
300	128	-.331	.193	.199	-1.215
300	129	-.396	.183	.212	-1.481
300	130	-.429	.200	.258	-1.687
300	131	-.392	.187	.120	-1.954
300	132	-.358	.158	.177	-1.423
300	133	-.365	.181	.189	-1.360
300	134	-.372	.187	.263	-1.566
300	135	-.393	.195	.381	-1.788
300	136	-.390	.186	.189	-1.610
300	137	-.359	.232	.219	-1.491
300	138	-.402	.238	.187	-1.575
300	139	-.391	.238	.180	-1.901
300	140	-.217	.059	-.031	-.750
300	141	-.202	.059	.203	-.550
300	142	-.173	.066	.121	-.656
300	143	-.185	.087	.148	-.767
300	144	-.194	.111	.146	-.839
300	145	-.202	.142	.267	-1.010
300	146	-.251	.178	.256	-1.217
300	147	-.284	.164	.111	-1.110
300	148	-.203	.041	-.062	-.417
300	149	-.173	.040	.088	-.436
300	150	-.142	.040	.071	-.454
300	151	-.153	.052	.058	-.447
300	152	-.161	.071	.029	-.659
300	153	-.189	.100	.164	-.713
300	154	-.188	.106	.341	-.685
300	155	-.198	.104	.328	-.601
300	156	-.159	.037	.019	-.359
300	157	-.145	.036	.013	-.319
300	158	-.131	.033	.014	-.328
300	159	-.151	.041	-.007	-.507
300	160	-.104	.045	.136	-.345

APPENDIX A -- PRESSURE DATA: CONFIGURATION A: 1221 BRICKELL BUILDING

WD	TAP	CPMEAN	CPRMS	CPMAX	CPMIN
300	161	-.153	.050	.038	-.557
300	162	-.142	.062	.064	-.628
300	163	-.165	.095	.180	-.663
300	164	-.167	.123	.402	-.934
300	165	-.164	.122	.409	-.784
300	166	-.135	.029	-.027	-.283
300	167	-.143	.032	.134	-.302
300	168	-.145	.036	-.010	-.405
300	169	-.135	.044	.063	-.349
300	170	-.188	.041	-.024	-.455
300	171	-.177	.037	.042	-.381
300	172	-.357	.236	.214	-1.717
300	173	-.303	.217	.345	-1.556
300	174	-.339	.225	.153	-1.362
300	201	.339	.148	.804	-.290
300	202	.422	.159	.925	-.182
300	203	.409	.152	.901	-.180
300	204	.351	.133	.784	-.207
300	205	.251	.115	.631	-.278
300	206	.110	.095	.413	-.352
300	207	.334	.149	.858	-.273
300	208	.483	.165	.936	-.093
300	209	.537	.170	1.026	-.093
300	210	.448	.155	.935	-.123
300	211	.274	.127	.698	-.245
300	212	.114	.093	.411	-.229
300	213	.208	.166	.749	-.519
300	214	.358	.176	.933	-.351
300	215	.446	.174	.972	-.245
300	216	.402	.160	.865	-.179
300	217	.220	.131	.642	-.425
300	218	.020	.105	.403	-.559
300	219	.039	.171	.694	-.428
300	220	.157	.177	.795	-.354
300	221	.249	.185	.902	-.245
300	222	.225	.178	.819	-.349
300	223	.093	.154	.610	-.493
300	224	-.039	.139	.502	-.587
300	225	-.082	.135	.588	-.529
300	226	.123	.153	.793	-.303
300	227	.316	.182	1.063	-.212
300	228	.303	.176	1.187	-.170
300	229	.048	.131	.588	-.351
300	230	-.207	.114	.259	-.662
300	231	.039	.145	.701	-.328
300	232	.201	.167	.877	-.236
300	233	.231	.171	.886	-.247
300	234	.193	.165	.841	-.303
300	235	-.005	.146	.615	-.545
300	236	-.031	.124	.588	-.388

WD	TAP	CPMEAN	CPRMS	CPMAX	CPMIN
300	237	.070	.146	.692	-.337
300	238	.089	.151	.780	-.292
300	239	.082	.152	.703	-.359
300	240	-.038	.158	.591	-.553
300	241	-.077	.096	.491	-.434
300	242	-.013	.108	.663	-.383
300	243	.020	.122	.758	-.409
300	244	.022	.131	.745	-.605
300	245	-.055	.144	.550	-.602
300	246	-.161	.134	.183	-.959
300	247	-.121	.141	.215	-1.119
300	248	-.086	.162	.516	-.937
300	249	-.062	.177	.590	-.907
300	250	-.104	.198	.615	-1.133
300	251	-.155	.206	.482	-1.384
300	252	-.135	.092	.207	-.941
300	253	-.094	.091	.186	-.765
300	254	-.062	.130	.717	-.781
300	255	-.034	.142	.560	-.821
300	256	-.053	.176	.684	-.828
300	257	-.108	.170	.701	-.985
300	258	-.105	.070	.256	-.541
300	259	-.058	.063	.365	-.557
300	260	-.014	.070	.386	-.292
300	261	.018	.107	.680	-.299
300	262	-.010	.133	.572	-.413
300	263	-.058	.116	.386	-.388
300	264	-.077	.065	.248	-.556
300	265	-.032	.056	.278	-.377
300	266	.022	.072	.391	-.201
300	267	.068	.095	.555	-.243
300	268	.034	.093	.459	-.388
300	269	-.040	.085	.356	-.370
300	270	-.046	.135	.552	-.450
300	271	.087	.137	.700	-.398
300	272	.051	.148	.724	-.383
300	273	-.125	.133	.529	-.575
300	274	-.035	.123	.469	-.443
300	275	.122	.141	.883	-.261
300	276	.230	.156	.929	-.188
300	277	.177	.154	.803	-.275
300	278	.062	.136	.858	-.370
300	279	-.130	.124	.516	-.602
300	280	.255	.164	1.001	-.156
300	281	.200	.158	.985	-.239
300	282	.009	.137	.664	-.497
300	283	.101	.159	.825	-.384
300	284	.112	.163	.760	-.398
300	285	-.033	.162	.617	-.568
300	301	-.371	.074	-.175	-.938

WD	TAP	CPMEAN	CPRMS	CPMAX	CPMIN
300	302	-.373	.077	-.176	-.981
300	303	-.355	.074	-.156	-.969
300	304	-.363	.076	-.160	-.983
300	305	-.394	.096	-.159	-1.311
300	306	-.387	.093	-.107	-1.319
300	307	-.418	.105	-.142	-1.121
300	308	-.446	.115	-.149	-1.230
300	309	-.454	.120	-.164	-1.350
300	310	-.466	.139	-.121	-1.488
300	311	-.385	.095	-.170	-1.234
300	312	-.393	.095	-.169	-1.082
300	313	-.413	.105	-.162	-1.254
300	314	-.432	.121	-.047	-1.322
300	315	-.459	.141	-.027	-1.378
300	316	-.474	.167	.036	-1.339
300	317	-.539	.146	-.197	-1.545
300	318	-.498	.142	-.177	-1.548
300	319	-.509	.156	-.074	-1.895
300	320	-.492	.158	-.021	-1.437
300	321	-.512	.165	.061	-1.406
300	322	-.476	.175	-.022	-1.581
300	323	-.588	.169	-.155	-1.648
300	324	-.585	.175	-.159	-1.644
300	325	-.644	.203	-.133	-1.734
300	326	-.586	.175	-.095	-1.432
300	327	-.557	.177	-.118	-1.452
300	328	-.455	.145	-.061	-1.217
300	329	-.431	.139	.108	-1.195
300	330	-.381	.125	.043	-1.084
300	331	-.552	.180	-.067	-1.445
300	332	-.518	.154	-.107	-1.468
300	333	-.642	.216	-.079	-2.009
300	334	-.584	.208	-.001	-1.702
300	335	-.588	.211	-.074	-2.312
300	336	-.653	.234	.001	-2.171
300	337	-.743	.346	-.003	-3.118
300	338	-.518	.309	.205	-2.354
300	339	-.661	.361	.094	-3.220
300	340	-.437	.195	.022	-1.537
300	341	-.425	.202	-.025	-1.581
300	342	-.257	.125	.152	-1.318
300	343	-.269	.106	.269	-.927
300	344	-.241	.082	.074	-.927
300	345	-.261	.068	-.013	-.663
300	346	-.238	.058	.113	-.563
300	347	-.256	.063	-.023	-.574
300	348	-.392	.144	.053	-1.232
300	349	-.404	.152	.011	-1.259
300	350	-.261	.105	.012	-.908
300	351	-.202	.052	.004	-.480

APPENDIX A -- PRESSURE DATA: CONFIGURATION A: 1221 BRICKELL BUILDING

WD	TAP	CPMEAN	CPRMS	CPMAX	CPMIN
300	352	-.168	.042	.020	-.393
300	353	-.194	.038	-.036	-.382
300	354	-.177	.036	-.037	-.338
300	355	-.199	.041	-.067	-.450
300	356	-.135	.036	.003	-.300
300	357	-.186	.035	-.065	-.346
300	358	-.137	.036	.007	-.322
300	359	-.155	.037	.030	-.353
300	360	-.363	.169	.024	-1.258
300	361	-.379	.171	.009	-1.671
300	362	-.226	.101	.014	-.881
300	363	-.154	.053	.058	-.584
300	364	-.152	.041	.053	-.366
300	365	-.133	.045	.084	-.372
300	366	-.143	.034	.038	-.309
300	367	-.161	.040	-.003	-.399
300	368	-.143	.038	.015	-.328
300	369	-.171	.035	-.020	-.367
300	370	-.158	.036	-.027	-.370
300	371	-.175	.039	-.027	-.407
300	372	-.544	.268	.026	-1.885
300	373	-.540	.337	.216	-2.488
300	374	-.412	.278	.157	-2.089
300	401	-.341	.070	-.120	-.804
300	402	-.356	.067	-.123	-.710
300	403	-.358	.076	-.102	-.950
300	404	-.408	.088	-.140	-1.023
300	405	-.369	.093	-.055	-1.008
300	406	-.369	.075	-.145	-.925
300	407	-.378	.095	-.044	-1.000
300	408	-.401	.071	-.209	-.720
300	409	-.363	.065	-.179	-.659
300	410	-.376	.081	-.150	-1.051
300	411	-.381	.091	-.131	-.891
300	412	-.435	.104	-.110	-.881
300	413	-.401	.082	-.201	-.925
300	414	-.394	.081	-.162	-1.010
300	415	-.396	.092	-.104	-1.086
300	416	-.451	.113	-.112	-1.164
300	417	-.428	.134	-.029	-1.188
300	418	-.460	.103	-.224	-.936
300	419	-.467	.114	.020	-1.117
300	420	-.503	.129	-.084	-1.221
300	421	-.453	.137	-.032	-1.079
300	422	-.443	.146	.069	-1.551
300	423	-.384	.087	-.133	-.852
300	424	-.378	.071	-.091	-.695
300	425	-.382	.068	-.171	-.694
300	426	-.369	.084	-.071	-.798
300	427	-.355	.091	-.042	-.830

WD	TAP	CPMEAN	CPRMS	CPMAX	CPMIN
300	428	-.348	.089	-.001	-.846
300	429	-.375	.080	-.140	-.718
300	430	-.342	.066	-.114	-.662
300	431	-.344	.061	-.162	-.668
300	432	-.346	.073	-.100	-.660
300	433	-.334	.079	-.035	-.695
300	434	-.338	.081	-.035	-.820
300	435	-.386	.097	-.086	-.856
300	436	-.375	.086	-.133	-.825
300	437	-.352	.072	-.118	-.800
300	438	-.365	.091	-.142	-.860
300	439	-.346	.092	-.091	-.826
300	440	-.352	.101	-.121	-1.104
300	441	-.362	.103	-.047	-.927
300	442	-.363	.098	-.057	-.912
300	443	-.343	.087	-.009	-.863
300	444	-.371	.128	-.128	-1.481
300	445	-.364	.147	-.084	-1.699
300	446	-.367	.150	-.066	-1.943
300	447	-.270	.084	-.027	-.809
300	448	-.287	.087	-.091	-.894
300	449	-.279	.075	-.079	-.822
300	450	-.286	.068	-.083	-.720
300	451	-.270	.079	-.056	-.895
300	452	-.271	.083	-.055	-.983
300	453	-.215	.058	-.028	-.470
300	454	-.228	.060	-.028	-.526
300	455	-.216	.060	-.002	-.498
300	456	-.205	.063	-.020	-.615
300	457	-.250	.078	-.040	-.888
300	458	-.269	.088	-.087	-.881
300	459	-.156	.057	-.004	-.728
300	460	-.151	.050	.011	-.537
300	461	-.136	.031	-.020	-.357
300	462	-.136	.028	-.023	-.277
300	463	-.141	.034	-.007	-.374
300	464	-.147	.030	-.029	-.323
300	465	-.152	.036	-.024	-.304
300	466	-.162	.040	-.005	-.360
300	467	-.155	.036	-.030	-.302
300	468	-.138	.033	-.012	-.268
300	469	-.142	.032	-.001	-.303
300	470	-.141	.031	-.042	-.277
300	471	-.151	.032	-.021	-.294
300	472	-.146	.041	.070	-.306
300	501	.117	.163	.888	-.468
300	502	.369	.195	1.299	-.211
300	503	.190	.181	.903	-.263
300	504	-.141	.037	.013	-.303
300	505	-.154	.033	-.051	-.332

WD	TAP	CPMEAN	CPRMS	CPMAX	CPMIN
300	506	-.133	.043	.060	-.372
300	507	-.149	.034	-.031	-.310
300	508	-.146	.036	.008	-.362
300	509	-.153	.039	-.029	-.294
300	510	-.153	.036	-.030	-.360
300	9124	-.437	.212	.325	-1.649
300	9140	-.222	.056	-.007	-.547
300	9213	.249	.167	.748	-.594
300	9218	.084	.103	.405	-.360
300	9317	-.485	.130	-.185	-1.588
300	9322	-.502	.176	.060	-1.441
300	9348	-.391	.144	.174	-1.092
300	9355	-.205	.046	-.054	-.450
310	101	-.488	.182	.238	-1.713
310	102	-.428	.170	.149	-1.290
310	103	-.210	.089	.021	-.704
310	104	-.436	.208	.368	-1.512
310	105	-.431	.169	.316	-1.139
310	106	-.226	.055	-.051	-.555
310	107	-.069	.146	.234	-.828
310	108	-.259	.062	-.070	-.627
310	109	-.279	.060	-.077	-.575
310	110	-.106	.047	.078	-.342
310	111	-.238	.043	-.078	-.387
310	112	-.174	.040	-.027	-.401
310	113	-.083	.050	.093	-.329
310	114	-.019	.160	.342	-.788
310	115	-.350	.249	.428	-1.189
310	116	-.365	.194	.471	-1.067
310	117	-.231	.051	-.051	-.462
310	118	-.166	.051	.061	-.388
310	119	-.079	.065	.227	-.424
310	120	-.021	.137	.418	-.973
310	121	-.190	.267	.577	-1.164
310	122	-.258	.239	.623	-1.252
310	123	-.210	.226	.395	-1.129
310	124	-.251	.212	.490	-.964
310	125	-.243	.080	.022	-.708
310	126	-.182	.070	.121	-.529
310	127	-.116	.077	.261	-.494
310	128	-.102	.123	.358	-.940
310	129	-.217	.197	.453	-1.047
310	130	-.278	.196	.509	-1.159
310	131	-.303	.231	.494	-1.572
310	132	-.235	.160	.464	-1.067
310	133	-.187	.159	.327	-.896
310	134	-.207	.168	.368	-1.045
310	135	-.212	.185	.377	-1.309
310	136	-.218	.168	.305	-1.288
310	137	-.139	.147	.325	-.981

APPENDIX A -- PRESSURE DATA: CONFIGURATION A: 1221 BRICKELL BUILDING

WD	TAP	CPMEAN	CPRMS	CPMAX	CPMIN
310	138	-.167	.153	.266	-1.293
310	139	-.178	.159	.245	-1.507
310	140	-.219	.073	.034	-.582
310	141	-.183	.059	.050	-.501
310	142	-.127	.056	.156	-.422
310	143	-.109	.062	.123	-.484
310	144	-.091	.078	.267	-.649
310	145	-.084	.092	.330	-.650
310	146	-.092	.113	.352	-1.169
310	147	-.117	.108	.236	-.979
310	148	-.212	.060	-.002	-.606
310	149	-.165	.042	-.010	-.384
310	150	-.125	.037	.037	-.272
310	151	-.124	.041	.044	-.286
310	152	-.111	.049	.079	-.310
310	153	-.056	.083	.318	-.393
310	154	.003	.136	.563	-.541
310	155	-.000	.151	.571	-.731
310	156	-.164	.041	-.007	-.346
310	157	-.136	.036	.063	-.308
310	158	-.122	.033	.035	-.291
310	159	-.144	.041	.028	-.353
310	160	-.077	.047	.171	-.281
310	161	-.137	.047	.079	-.324
310	162	-.104	.049	.154	-.365
310	163	-.068	.079	.236	-.441
310	164	.001	.129	.440	-.781
310	165	.012	.146	.945	-.604
310	166	-.143	.048	-.008	-.560
310	167	-.148	.051	.310	-.577
310	168	-.157	.052	.010	-.502
310	169	-.123	.058	.229	-.414
310	170	-.206	.058	-.055	-.521
310	171	-.176	.044	-.031	-.392
310	172	-.125	.144	.523	-1.132
310	173	-.110	.138	.452	-1.083
310	174	-.141	.142	.375	-1.159
310	201	.476	.149	.906	.026
310	202	.488	.149	.912	.003
310	203	.406	.134	.827	-.041
310	204	.281	.116	.662	-.150
310	205	.161	.098	.456	-.186
310	206	.030	.080	.271	-.284
310	207	.477	.153	.903	-.108
310	208	.561	.154	1.044	-.087
310	209	.526	.148	.949	-.006
310	210	.378	.127	.791	-.061
310	211	.183	.096	.489	-.177
310	212	.028	.072	.265	-.240
310	213	.430	.169	.916	-.455
310	214	.489	.170	.986	-.319
310	215	.458	.156	.911	-.160
310	216	.305	.134	.759	-.168
310	217	.102	.102	.500	-.268
310	218	-.078	.080	.218	-.407
310	219	.236	.181	.781	-.346
310	220	.288	.181	.936	-.303
310	221	.260	.163	.853	-.207
310	222	.131	.132	.685	-.262
310	223	-.033	.108	.798	-.382
310	224	-.154	.102	.517	-.549
310	225	.077	.136	.584	-.483
310	226	.225	.168	.830	-.253
310	227	.315	.178	.958	-.240
310	228	.223	.149	.844	-.215
310	229	-.057	.107	.549	-.436
310	230	-.280	.107	.207	-.799
310	231	.122	.171	.758	-.528
310	232	.190	.171	.880	-.269
310	233	.181	.155	.727	-.301
310	234	.116	.135	.719	-.321
310	235	-.087	.110	.411	-.471
310	236	.026	.142	.694	-.594
310	237	.065	.149	.708	-.280
310	238	.055	.140	.705	-.305
310	239	.028	.127	.607	-.356
310	240	-.129	.118	.396	-.556
310	241	-.087	.099	.439	-.628
310	242	-.086	.092	.417	-.486
310	243	-.070	.096	.482	-.412
310	244	-.082	.097	.389	-.419
310	245	-.161	.118	.444	-.617
310	246	-.200	.141	.177	-1.100
310	247	-.216	.169	.163	-1.087
310	248	-.227	.184	.279	-1.129
310	249	-.231	.182	.254	-1.136
310	250	-.285	.193	.322	-1.182
310	251	-.334	.207	.347	-1.266
310	252	-.158	.107	.158	-.879
310	253	-.139	.100	.221	-.851
310	254	-.136	.118	.203	-.880
310	255	-.182	.134	.196	-.806
310	256	-.202	.151	.375	-.951
310	257	-.240	.163	.319	-1.066
310	258	-.141	.132	.356	-.939
310	259	-.098	.083	.229	-.599
310	260	-.083	.064	.149	-.379
310	261	-.089	.065	.259	-.427
310	262	-.136	.080	.261	-.430
310	263	-.166	.078	.206	-.412
310	264	-.101	.124	.288	-.884
310	265	-.069	.084	.219	-.586
310	266	-.063	.064	.204	-.468
310	267	-.053	.069	.331	-.318
310	268	-.080	.080	.351	-.397
310	269	-.112	.085	.380	-.558
310	270	.130	.160	.877	-.348
310	271	.186	.166	.802	-.303
310	272	-.053	.103	.464	-.349
310	273	-.219	.097	.292	-.619
310	274	.111	.146	.707	-.321
310	275	.226	.164	.825	-.356
310	276	.288	.174	.948	-.294
310	277	.085	.121	.809	-.343
310	278	-.037	.102	.610	-.399
310	279	-.219	.103	.331	-.769
310	280	.349	.193	1.038	-.224
310	281	.110	.123	.639	-.326
310	282	.094	.167	.746	-.411
310	283	.125	.166	.825	-.352
310	284	.060	.123	.616	-.316
310	285	-.106	.119	.486	-.760
310	301	-.330	.059	-.144	-.677
310	302	-.329	.058	-.148	-.681
310	303	-.317	.054	-.154	-.576
310	304	-.324	.055	-.158	-.582
310	305	-.345	.062	-.160	-.804
310	306	-.338	.058	-.155	-.662
310	307	-.368	.069	-.163	-1.290
310	308	-.380	.065	-.066	-.758
310	309	-.399	.086	-.140	-1.642
310	310	-.408	.097	-.134	-1.472
310	311	-.338	.060	-.136	-.707
310	312	-.345	.061	-.128	-.722
310	313	-.359	.066	-.142	-.874
310	314	-.376	.071	-.134	-.868
310	315	-.404	.094	-.111	-1.326
310	316	-.414	.105	-.151	-1.071
310	317	-.482	.107	-.142	-1.720
310	318	-.442	.101	-.106	-1.761
310	319	-.459	.112	-.140	-1.405
310	320	-.457	.122	.096	-1.265
310	321	-.490	.123	-.090	-1.258
310	322	-.457	.127	-.080	-1.191
310	323	-.516	.140	-.173	-1.786
310	324	-.511	.143	-.156	-1.783
310	325	-.562	.164	-.109	-1.811
310	326	-.517	.151	-.097	-1.720
310	327	-.523	.158	-.051	-1.472
310	328	-.487	.130	-.094	-1.045

APPENDIX A -- PRESSURE DATA: CONFIGURATION A: 1221 BRICKELL BUILDING

WD	TAP	CPMEAN	CPRMS	CPMAX	CPMIN
310	329	-.479	.120	-.130	-1.011
310	330	-.434	.110	-.053	-.989
310	331	-.549	.190	-.019	-1.625
310	332	-.543	.181	-.061	-1.467
310	333	-.628	.215	-.050	-2.101
310	334	-.543	.184	-.089	-1.866
310	335	-.542	.175	-.122	-1.586
310	336	-.635	.239	-.159	-1.750
310	337	-.734	.337	.044	-3.278
310	338	-.657	.311	.250	-2.215
310	339	-.699	.348	.029	-2.732
310	340	-.480	.267	.055	-1.969
310	341	-.479	.278	.110	-2.153
310	342	-.364	.228	.110	-1.722
310	343	-.380	.180	.160	-1.212
310	344	-.346	.144	.034	-1.047
310	345	-.346	.115	.065	-.872
310	346	-.312	.097	.081	-.712
310	347	-.334	.098	.004	-.827
310	348	-.299	.121	.153	-1.161
310	349	-.329	.127	.091	-1.107
310	350	-.256	.108	.067	-.859
310	351	-.203	.061	.034	-.505
310	352	-.171	.053	.017	-.591
310	353	-.196	.047	.049	-.406
310	354	-.181	.047	.012	-.433
310	355	-.200	.053	-.010	-.485
310	356	-.138	.042	.129	-.344
310	357	-.181	.043	.042	-.382
310	358	-.143	.042	.007	-.455
310	359	-.158	.045	.078	-.457
310	360	-.260	.125	.088	-1.102
310	361	-.282	.128	.013	-.976
310	362	-.212	.101	.031	-.866
310	363	-.160	.061	.068	-.484
310	364	-.157	.059	.119	-.788
310	365	-.141	.050	.131	-.368
310	366	-.138	.033	.031	-.306
310	367	-.153	.041	.084	-.409
310	368	-.139	.041	.041	-.401
310	369	-.166	.034	-.034	-.347
310	370	-.158	.045	.024	-.399
310	371	-.172	.049	.057	-.437
310	372	-.598	.315	.045	-2.596
310	373	-.657	.359	.086	-2.368
310	374	-.555	.338	.325	-2.368
310	401	-.317	.059	-.113	-.600
310	402	-.338	.062	-.143	-.661
310	403	-.337	.066	-.106	-.653
310	404	-.379	.072	-.112	-.738
310	405	-.334	.072	-.113	-.673
310	406	-.340	.061	-.140	-.652
310	407	-.335	.074	-.122	-.674
310	408	-.378	.066	-.173	-.888
310	409	-.345	.063	-.116	-.780
310	410	-.347	.068	-.147	-.689
310	411	-.345	.071	-.116	-.657
310	412	-.384	.079	-.135	-.766
310	413	-.361	.067	-.193	-.784
310	414	-.360	.069	-.170	-.893
310	415	-.356	.075	-.118	-.840
310	416	-.396	.081	-.116	-.794
310	417	-.364	.079	-.102	-.828
310	418	-.402	.087	-.193	-1.116
310	419	-.400	.104	-.128	-1.078
310	420	-.437	.114	-.133	-1.180
310	421	-.406	.116	-.106	-1.056
310	422	-.413	.128	-.067	-1.518
310	423	-.365	.065	-.128	-.683
310	424	-.360	.064	-.154	-.602
310	425	-.363	.067	-.120	-.707
310	426	-.353	.071	-.066	-.710
310	427	-.340	.067	-.108	-.629
310	428	-.336	.067	-.120	-.596
310	429	-.365	.064	-.173	-.611
310	430	-.343	.061	-.114	-.643
310	431	-.338	.056	-.155	-.569
310	432	-.333	.057	-.126	-.531
310	433	-.321	.058	-.096	-.552
310	434	-.327	.058	-.109	-.545
310	435	-.392	.080	-.125	-.822
310	436	-.366	.074	-.140	-.691
310	437	-.343	.065	-.166	-.681
310	438	-.338	.066	-.168	-.751
310	439	-.318	.064	-.130	-.684
310	440	-.329	.071	-.149	-.738
310	441	-.401	.110	-.086	-.866
310	442	-.407	.110	-.135	-.902
310	443	-.386	.103	-.128	-.992
310	444	-.395	.135	-.142	-1.575
310	445	-.365	.129	-.093	-1.425
310	446	-.364	.122	-.016	-1.234
310	447	-.373	.143	.018	-1.140
310	448	-.375	.140	.013	-1.151
310	449	-.339	.108	.041	-.771
310	450	-.350	.124	-.071	-1.613
310	451	-.319	.126	-.031	-1.468
310	452	-.319	.136	.023	-1.316
310	453	-.193	.066	-.010	-.708
310	454	-.204	.068	-.014	-.817
310	455	-.176	.063	.037	-.546
310	456	-.258	.086	-.032	-.762
310	457	-.284	.093	-.054	-.917
310	458	-.315	.115	-.087	-1.220
310	459	-.136	.055	.038	-.502
310	460	-.172	.070	.004	-.610
310	461	-.139	.041	.018	-.439
310	462	-.140	.042	-.003	-.362
310	463	-.145	.035	.024	-.301
310	464	-.151	.046	.005	-.440
310	465	-.141	.038	.029	-.282
310	466	-.176	.059	.030	-.508
310	467	-.142	.038	.026	-.287
310	468	-.140	.032	.008	-.258
310	469	-.145	.038	-.024	-.397
310	470	-.138	.038	-.030	-.337
310	471	-.159	.045	-.021	-.419
310	472	-.165	.055	.068	-.485
310	501	.016	.120	.544	-.458
310	502	.352	.175	1.209	-.137
310	503	.325	.202	1.135	-.229
310	504	-.142	.035	.015	-.305
310	505	-.156	.045	-.020	-.425
310	506	-.132	.041	.036	-.359
310	507	-.155	.043	-.042	-.452
310	508	-.144	.048	.010	-.536
310	509	-.141	.043	.051	-.357
310	510	-.174	.054	-.037	-.469
310	9124	-.246	.222	.517	-1.220
310	9140	-.238	.077	.134	-.630
310	9213	.440	.167	.956	-.498
310	9218	-.015	.078	.316	-.359
310	9317	-.428	.089	-.144	-1.459
310	9322	-.468	.125	-.105	-1.258
310	9348	-.312	.116	.067	-.877
310	9355	-.209	.060	.007	-.464
320	101	-.140	.200	.555	-1.149
320	102	-.034	.140	.320	-.753
320	103	-.102	.059	.127	-.409
320	104	.113	.211	.611	-.704
320	105	.029	.245	.777	-.852
320	106	-.163	.051	.018	-.361
320	107	.127	.090	.423	-.430
320	108	-.208	.050	-.055	-.422
320	109	-.250	.051	-.099	-.483
320	110	-.002	.065	.298	-.229
320	111	-.208	.041	-.046	-.344
320	112	-.114	.046	.084	-.314
320	113	.033	.068	.303	-.204
320	114	.205	.101	.571	-.402

APPENDIX A -- PRESSURE DATA: CONFIGURATION A: 1221 BRICKELL BUILDING

WD	TAP	CPMEAN	CPRMS	CPMAX	CPMIN
320	115	.239	.222	.732	-.733
320	116	.185	.252	.829	-.712
320	117	-.188	.044	-.026	-.385
320	118	-.092	.053	.137	-.295
320	119	.048	.081	.348	-.204
320	120	.189	.122	.654	-.422
320	121	.231	.197	.891	-.714
320	122	.209	.239	.965	-.698
320	123	.105	.226	.734	-1.032
320	124	.074	.255	.860	-1.270
320	125	-.202	.060	.020	-.557
320	126	-.112	.067	.151	-.342
320	127	.007	.095	.352	-.305
320	128	.095	.137	.568	-.417
320	129	.083	.213	.678	-.822
320	130	.038	.264	.744	-.890
320	131	-.026	.285	.860	-1.246
320	132	.030	.236	.802	-.803
320	133	.066	.184	.733	-.632
320	134	.059	.201	.832	-.845
320	135	.044	.209	.821	-.919
320	136	-.020	.186	.671	-.843
320	137	.038	.139	.594	-.845
320	138	-.031	.136	.540	-.881
320	139	-.063	.125	.527	-.882
320	140	-.226	.065	.024	-.522
320	141	-.152	.071	.084	-.467
320	142	-.046	.083	.260	-.292
320	143	.006	.098	.380	-.312
320	144	.040	.109	.546	-.259
320	145	.035	.117	.539	-.371
320	146	.004	.126	.611	-.544
320	147	-.042	.102	.456	-.570
320	148	-.237	.069	-.024	-.640
320	149	-.156	.052	.038	-.392
320	150	-.089	.045	.123	-.250
320	151	-.072	.046	.143	-.241
320	152	-.048	.057	.275	-.273
320	153	.013	.082	.406	-.278
320	154	.094	.130	.661	-.252
320	155	.084	.141	.789	-.280
320	156	-.186	.055	-.029	-.467
320	157	-.127	.043	.033	-.289
320	158	-.127	.043	.049	-.285
320	159	-.115	.054	.106	-.356
320	160	.024	.076	.362	-.249
320	161	-.101	.067	.244	-.346
320	162	-.035	.058	.260	-.359
320	163	-.004	.083	.322	-.356
320	164	.066	.134	.630	-.491
320	165	.064	.144	.804	-.621
320	166	-.200	.088	.073	-.693
320	167	-.174	.118	.499	-.703
320	168	-.169	.069	.072	-.573
320	169	-.015	.084	.399	-.319
320	170	-.238	.067	-.046	-.565
320	171	-.167	.052	.057	-.451
320	172	.006	.147	.584	-.718
320	173	.012	.142	.600	-.871
320	174	-.057	.134	.542	-.813
320	201	.499	.153	.901	-.262
320	202	.436	.143	.810	-.089
320	203	.313	.120	.637	-.146
320	204	.191	.100	.504	-.131
320	205	.063	.079	.329	-.209
320	206	-.057	.063	.173	-.321
320	207	.541	.160	1.040	.062
320	208	.534	.152	.976	.071
320	209	.430	.133	.845	.023
320	210	.261	.104	.578	-.100
320	211	.068	.075	.325	-.193
320	212	-.067	.057	.126	-.272
320	213	.512	.165	.973	-.307
320	214	.489	.159	.928	-.432
320	215	.394	.140	.888	-.026
320	216	.205	.105	.585	-.113
320	217	.005	.072	.333	-.243
320	218	-.148	.052	.097	-.389
320	219	.273	.198	.817	-.532
320	220	.296	.167	.821	-.452
320	221	.242	.145	.774	-.158
320	222	.106	.116	.539	-.256
320	223	-.062	.083	.268	-.308
320	224	-.177	.070	.212	-.413
320	225	.158	.157	.731	-.714
320	226	.239	.184	.894	-.625
320	227	.279	.188	1.044	-.334
320	228	.143	.150	.723	-.250
320	229	-.125	.103	.312	-.473
320	230	-.308	.096	-.011	-.753
320	231	.117	.201	.795	-1.332
320	232	.171	.174	.885	-.393
320	233	.150	.161	.778	-.319
320	234	.074	.139	.557	-.267
320	235	-.142	.104	.287	-.539
320	236	.037	.174	.732	-.952
320	237	.079	.145	.902	-.309
320	238	.063	.143	.740	-.254
320	239	.023	.134	.657	-.303
320	240	-.157	.119	.280	-.631
320	241	-.118	.150	.492	-.897
320	242	-.096	.105	.417	-.526
320	243	-.088	.103	.511	-.522
320	244	-.105	.109	.398	-.538
320	245	-.193	.124	.378	-.641
320	246	-.248	.164	.303	-1.316
320	247	-.256	.174	.227	-1.446
320	248	-.283	.177	.185	-1.254
320	249	-.315	.168	.117	-1.349
320	250	-.369	.168	.108	-1.266
320	251	-.401	.166	.055	-1.062
320	252	-.222	.130	.244	-.897
320	253	-.191	.125	.226	-.857
320	254	-.165	.123	.306	-.910
320	255	-.230	.136	.117	-1.000
320	256	-.296	.155	.262	-1.140
320	257	-.351	.165	.224	-1.288
320	258	-.272	.182	.227	-1.291
320	259	-.156	.113	.146	-.752
320	260	-.116	.065	.235	-.500
320	261	-.130	.061	.174	-.394
320	262	-.193	.072	.191	-.538
320	263	-.232	.072	.091	-.568
320	264	-.181	.143	.276	-1.029
320	265	-.117	.090	.238	-.655
320	266	-.107	.059	.186	-.414
320	267	-.120	.060	.215	-.365
320	268	-.165	.072	.151	-.497
320	269	-.199	.085	.143	-.646
320	270	.157	.169	.717	-.619
320	271	.193	.161	.839	-.559
320	272	-.101	.092	.294	-.462
320	273	-.241	.080	.105	-.656
320	274	.156	.166	.873	-.590
320	275	.248	.167	.775	-.460
320	276	.279	.173	.886	-.327
320	277	.033	.118	.513	-.318
320	278	-.089	.095	.315	-.363
320	279	-.247	.087	.116	-.717
320	280	.283	.202	1.079	-.447
320	281	.037	.133	.606	-.339
320	282	.086	.195	.961	-.955
320	283	.140	.167	.893	-.397
320	284	.022	.133	.558	-.330
320	285	-.150	.118	.329	-.642
320	301	-.332	.059	-.128	-.583
320	302	-.332	.057	-.155	-.572
320	303	-.321	.054	-.170	-.706
320	304	-.326	.054	-.174	-.707
320	305	-.340	.057	-.183	-.760

APPENDIX A -- PRESSURE DATA: CONFIGURATION A; 1221 BRICKELL BUILDING

WD	TAP	CPMEAN	CPRMS	CPMAX	CPMIN
320	306	-.334	.051	-.183	-.654
320	307	-.358	.059	-.195	-.590
320	308	-.369	.054	-.203	-.618
320	309	-.379	.070	-.208	-.764
320	310	-.388	.079	-.200	-.904
320	311	-.329	.050	-.145	-.529
320	312	-.336	.050	-.148	-.563
320	313	-.344	.051	-.148	-.597
320	314	-.361	.054	-.181	-.601
320	315	-.381	.070	-.191	-.939
320	316	-.383	.077	-.161	-.802
320	317	-.418	.071	-.190	-.841
320	318	-.383	.066	-.162	-.835
320	319	-.389	.060	-.228	-.702
320	320	-.398	.068	-.214	-.704
320	321	-.448	.082	-.251	-.881
320	322	-.420	.084	-.215	-.919
320	323	-.445	.099	-.196	-.948
320	324	-.440	.099	-.202	-.942
320	325	-.507	.120	-.223	-1.332
320	326	-.463	.111	-.210	-1.269
320	327	-.461	.114	-.180	-1.350
320	328	-.460	.112	-.197	-1.175
320	329	-.485	.102	-.192	-1.094
320	330	-.451	.100	-.184	-1.115
320	331	-.557	.207	-.102	-1.869
320	332	-.560	.200	-.121	-1.901
320	333	-.564	.167	-.166	-1.545
320	334	-.482	.121	-.131	-1.006
320	335	-.468	.112	-.187	-1.042
320	336	-.498	.162	-.090	-1.402
320	337	-.570	.218	-.114	-1.823
320	338	-.549	.203	-.128	-2.089
320	339	-.521	.210	-.092	-2.021
320	340	-.519	.216	.079	-2.113
320	341	-.551	.225	.042	-2.496
320	342	-.495	.177	.036	-1.662
320	343	-.489	.144	-.040	-1.152
320	344	-.469	.124	-.102	-1.016
320	345	-.476	.110	-.074	-.872
320	346	-.431	.099	-.152	-.784
320	347	-.450	.105	-.081	-.941
320	348	-.354	.131	.051	-1.183
320	349	-.400	.137	-.003	-1.212
320	350	-.381	.144	-.010	-1.332
320	351	-.333	.145	.046	-.966
320	352	-.257	.117	.148	-.737
320	353	-.254	.091	.304	-.799
320	354	-.230	.078	.040	-.575
320	355	-.236	.072	.006	-.672
320	356	-.137	.058	.082	-.378
320	357	-.176	.060	.072	-.518
320	358	-.141	.063	.164	-.442
320	359	-.179	.085	.149	-.768
320	360	-.289	.138	.065	-1.782
320	361	-.338	.150	.030	-2.007
320	362	-.323	.145	.122	-1.298
320	363	-.221	.106	.332	-.703
320	364	-.193	.114	.184	-.942
320	365	-.127	.076	.292	-.537
320	366	-.131	.048	.144	-.350
320	367	-.133	.054	.131	-.433
320	368	-.122	.056	.115	-.442
320	369	-.152	.051	.098	-.338
320	370	-.191	.072	.123	-.546
320	371	-.209	.072	.058	-.667
320	372	-.542	.229	-.082	-2.015
320	373	-.527	.205	-.081	-1.734
320	374	-.527	.207	.016	-1.718
320	401	-.340	.066	-.117	-.731
320	402	-.342	.067	-.090	-.642
320	403	-.336	.070	-.064	-.742
320	404	-.373	.073	-.069	-.832
320	405	-.340	.068	-.119	-.655
320	406	-.357	.069	-.139	-.824
320	407	-.340	.067	-.126	-.659
320	408	-.378	.073	-.145	-.855
320	409	-.344	.070	-.138	-.748
320	410	-.346	.067	-.113	-.621
320	411	-.342	.067	-.099	-.680
320	412	-.376	.067	-.150	-.667
320	413	-.358	.068	-.138	-.765
320	414	-.352	.070	-.145	-.757
320	415	-.347	.074	-.109	-.737
320	416	-.385	.075	-.131	-.848
320	417	-.350	.069	-.140	-.782
320	418	-.384	.078	-.106	-.906
320	419	-.381	.087	-.149	-1.083
320	420	-.417	.090	-.178	-.962
320	421	-.385	.086	-.152	-.777
320	422	-.386	.095	-.108	-1.433
320	423	-.353	.063	-.124	-.657
320	424	-.348	.061	-.129	-.612
320	425	-.354	.064	-.173	-.807
320	426	-.347	.062	-.173	-.628
320	427	-.345	.063	-.141	-.656
320	428	-.334	.059	-.114	-.580
320	429	-.354	.060	-.134	-.713
320	430	-.344	.056	-.167	-.681
320	431	-.337	.053	-.151	-.609
320	432	-.341	.053	-.146	-.535
320	433	-.330	.053	-.112	-.524
320	434	-.341	.054	-.117	-.539
320	435	-.386	.070	-.156	-.773
320	436	-.369	.062	-.178	-.622
320	437	-.353	.056	-.155	-.681
320	438	-.355	.054	-.197	-.590
320	439	-.333	.054	-.163	-.553
320	440	-.335	.052	-.171	-.622
320	441	-.433	.087	-.179	-1.191
320	442	-.440	.087	-.186	-1.311
320	443	-.406	.081	-.219	-1.017
320	444	-.383	.083	-.178	-.920
320	445	-.355	.076	-.150	-.916
320	446	-.363	.076	-.155	-.823
320	447	-.486	.145	-.073	-1.370
320	448	-.489	.138	-.099	-1.331
320	449	-.446	.118	-.102	-.918
320	450	-.453	.127	-.148	-1.325
320	451	-.411	.119	-.080	-1.126
320	452	-.397	.120	-.062	-.958
320	453	-.182	.066	.021	-.546
320	454	-.195	.068	.010	-.510
320	455	-.220	.097	.022	-.797
320	456	-.404	.160	.106	-1.177
320	457	-.440	.170	.050	-1.348
320	458	-.524	.232	.026	-2.045
320	459	-.124	.085	.175	-.568
320	460	-.250	.115	.030	-.874
320	461	-.169	.070	.041	-.610
320	462	-.169	.068	.031	-.447
320	463	-.142	.044	.061	-.332
320	464	-.221	.090	-.004	-.617
320	465	-.122	.057	.152	-.320
320	466	-.168	.092	.117	-.628
320	467	-.123	.056	.145	-.365
320	468	-.128	.047	.076	-.346
320	469	-.163	.076	.067	-.596
320	470	-.178	.094	.079	-.966
320	471	-.246	.111	.078	-1.052
320	472	-.158	.081	.135	-.494
320	501	-.065	.119	.441	-.484
320	502	.258	.186	1.141	-.208
320	503	.266	.226	1.135	-.654
320	504	-.131	.045	.054	-.368
320	505	-.207	.085	.011	-.715
320	506	-.125	.056	.065	-.483
320	507	-.185	.074	.090	-.508
320	508	-.191	.082	.018	-.699
320	509	-.153	.058	.064	-.433

APPENDIX A -- PRESSURE DATA: CONFIGURATION A: 1221 BRICKELL BUILDING

WD	TAP	CPMEAN	CPRMS	CPMAX	CPMIN
320	510	-.251	.093	.021	-.599
320	9124	.094	.239	.756	-.821
320	9140	-.248	.078	.008	-.602
320	9213	.497	.164	1.126	-.164
320	9218	-.099	.055	.089	-.300
320	9317	-.381	.060	-.146	-.621
320	9322	-.417	.091	-.160	-.919
320	9348	-.365	.141	.020	-1.424
320	9355	-.255	.087	.282	-.679
330	101	.232	.140	.750	-.547
330	102	.134	.104	.556	-.232
330	103	-.013	.077	.263	-.297
330	104	.357	.132	.832	-.089
330	105	.416	.158	.869	-.247
330	106	-.109	.058	.104	-.340
330	107	.249	.108	.611	-.085
330	108	-.161	.051	.043	-.409
330	109	-.210	.051	-.063	-.456
330	110	.097	.085	.364	-.196
330	111	-.162	.048	.003	-.320
330	112	-.040	.062	.154	-.243
330	113	.132	.090	.422	-.166
330	114	.337	.127	.745	-.039
330	115	.455	.154	.924	-.223
330	116	.493	.168	1.003	-.197
330	117	-.161	.046	.036	-.327
330	118	-.045	.058	.186	-.223
330	119	.130	.086	.406	-.085
330	120	.314	.123	.719	-.022
330	121	.420	.147	1.069	-.015
330	122	.438	.157	1.027	-.101
330	123	.366	.147	1.074	-.064
330	124	.378	.156	1.034	-.204
330	125	-.187	.049	.040	-.366
330	126	-.075	.054	.183	-.263
330	127	.098	.075	.364	-.126
330	128	.272	.110	.620	-.063
330	129	.340	.155	.945	-.107
330	130	.367	.170	1.041	-.237
330	131	.310	.169	.963	-.232
330	132	.352	.166	.976	-.195
330	133	.298	.134	.741	-.217
330	134	.319	.143	.826	-.302
330	135	.326	.154	.867	-.410
330	136	.229	.161	.851	-.471
330	137	.274	.162	.826	-.244
330	138	.168	.162	.785	-.352
330	139	.122	.155	.655	-.322
330	140	-.244	.059	-.039	-.486
330	141	-.142	.057	.171	-.329
330	142	.009	.070	.276	-.218
330	143	.111	.091	.452	-.168
330	144	.185	.111	.565	-.142
330	145	.240	.141	.782	-.237
330	146	.212	.162	.969	-.223
330	147	.133	.139	.692	-.262
330	148	-.236	.057	-.048	-.558
330	149	-.142	.051	.077	-.341
330	150	-.055	.050	.150	-.247
330	151	-.021	.051	.219	-.195
330	152	.024	.061	.365	-.185
330	153	.116	.096	.635	-.171
330	154	.193	.141	.819	-.306
330	155	.163	.148	.756	-.371
330	156	-.212	.053	-.029	-.452
330	157	-.129	.045	.054	-.304
330	158	-.179	.053	.009	-.493
330	159	-.113	.071	.182	-.412
330	160	.101	.097	.604	-.190
330	161	-.065	.087	.385	-.350
330	162	.045	.070	.394	-.139
330	163	.074	.091	.493	-.214
330	164	.116	.125	.620	-.310
330	165	.099	.140	.869	-.373
330	166	-.385	.138	.078	-.954
330	167	-.312	.213	.514	-.951
330	168	-.240	.096	.017	-.786
330	169	.082	.092	.550	-.279
330	170	-.236	.063	-.029	-.499
330	171	-.144	.053	.075	-.339
330	172	.235	.171	.788	-.287
330	173	.238	.174	.781	-.309
330	174	.120	.169	.772	-.491
330	201	.399	.159	.900	-.469
330	202	.301	.131	.761	-.175
330	203	.177	.104	.558	-.192
330	204	.071	.083	.325	-.244
330	205	-.053	.066	.147	-.347
330	206	-.153	.055	.030	-.424
330	207	.467	.178	.981	-.308
330	208	.396	.142	.766	-.123
330	209	.274	.116	.594	-.046
330	210	.120	.087	.395	-.173
330	211	-.053	.061	.147	-.282
330	212	-.158	.049	.018	-.368
330	213	.319	.218	.922	-.423
330	214	.329	.165	.858	-.457
330	215	.234	.109	.660	-.087
330	216	.081	.082	.360	-.141
330	217	-.098	.055	.121	-.245
330	218	-.215	.044	-.067	-.360
330	219	.147	.214	.797	-.652
330	220	.173	.175	.665	-.522
330	221	.132	.094	.503	-.210
330	222	-.014	.069	.287	-.259
330	223	-.157	.052	.102	-.318
330	224	-.237	.046	-.004	-.392
330	225	.145	.197	.763	-.800
330	226	.119	.166	.655	-.561
330	227	.097	.099	.674	-.341
330	228	-.038	.080	.481	-.233
330	229	-.230	.067	.139	-.491
330	230	-.331	.069	-.078	-.656
330	231	.003	.232	.653	-1.305
330	232	.062	.089	.440	-.370
330	233	.005	.077	.400	-.210
330	234	-.073	.072	.350	-.293
330	235	-.240	.070	.121	-.509
330	236	-.185	.246	.452	-1.355
330	237	-.001	.080	.416	-.449
330	238	-.033	.073	.445	-.263
330	239	-.085	.077	.415	-.332
330	240	-.221	.079	.185	-.536
330	241	-.282	.193	.332	-1.077
330	242	-.088	.089	.244	-.768
330	243	-.087	.067	.283	-.358
330	244	-.126	.071	.319	-.361
330	245	-.226	.082	.271	-.512
330	246	-.429	.197	.226	-1.319
330	247	-.337	.203	.278	-1.251
330	248	-.186	.131	.292	-.904
330	249	-.220	.113	.233	-.718
330	250	-.291	.104	.134	-.735
330	251	-.328	.094	.090	-.742
330	252	-.369	.148	.086	-1.014
330	253	-.350	.173	.193	-1.178
330	254	-.154	.107	.188	-.735
330	255	-.156	.067	.142	-.742
330	256	-.244	.076	.104	-.733
330	257	-.305	.080	.050	-.709
330	258	-.386	.196	.170	-1.659
330	259	-.228	.156	.154	-1.192
330	260	-.146	.061	.063	-.500
330	261	-.179	.054	.013	-.533
330	262	-.262	.066	-.022	-.527
330	263	-.308	.067	-.103	-.572
330	264	-.191	.137	.250	-.929
330	265	-.116	.091	.177	-.646
330	266	-.107	.052	.120	-.324
330	267	-.156	.050	.050	-.391

APPENDIX A -- PRESSURE DATA: CONFIGURATION A: 1221 BRICKELL BUILDING

WD	TAP	CPMEAN	CPRMS	CPMAX	CPMIN
330	268	-.242	.066	.153	-.525
330	269	-.297	.080	.147	-.648
330	270	.073	.192	.782	-.675
330	271	.153	.163	.661	-.495
330	272	-.198	.060	.290	-.394
330	273	-.295	.059	.078	-.538
330	274	.111	.202	.802	-.759
330	275	.152	.160	.600	-.736
330	276	.142	.119	.536	-.392
330	277	-.128	.072	.303	-.356
330	278	-.206	.066	.166	-.462
330	279	-.293	.060	-.055	-.535
330	280	.122	.142	.728	-.494
330	281	-.121	.076	.267	-.318
330	282	-.064	.238	.554	-1.065
330	283	.062	.101	.563	-.645
330	284	-.098	.072	.280	-.418
330	285	-.242	.075	.144	-.619
330	301	-.337	.064	-.114	-.633
330	302	-.339	.064	-.136	-.626
330	303	-.325	.058	-.141	-.554
330	304	-.331	.058	-.146	-.566
330	305	-.341	.062	-.148	-.656
330	306	-.332	.054	-.172	-.544
330	307	-.358	.062	-.204	-.671
330	308	-.367	.057	-.214	-.600
330	309	-.366	.066	-.160	-.865
330	310	-.370	.070	-.153	-1.048
330	311	-.330	.048	-.177	-.619
330	312	-.338	.048	-.182	-.625
330	313	-.342	.048	-.180	-.656
330	314	-.355	.051	-.181	-.657
330	315	-.366	.058	-.179	-.657
330	316	-.359	.067	-.056	-.711
330	317	-.389	.055	-.213	-.613
330	318	-.360	.051	-.209	-.570
330	319	-.376	.051	-.208	-.566
330	320	-.383	.054	-.205	-.621
330	321	-.423	.063	-.232	-.902
330	322	-.399	.066	-.201	-.907
330	323	-.397	.069	-.130	-.765
330	324	-.396	.069	-.146	-.766
330	325	-.449	.085	-.225	-.953
330	326	-.413	.078	-.197	-.897
330	327	-.411	.079	-.203	-1.066
330	328	-.417	.077	-.222	-.877
330	329	-.454	.081	-.246	-1.012
330	330	-.430	.081	-.209	-.823
330	331	-.471	.144	-.158	-1.262
330	332	-.476	.140	-.177	-1.232

WD	TAP	CPMEAN	CPRMS	CPMAX	CPMIN
330	333	-.478	.110	-.223	-1.119
330	334	-.432	.085	-.213	-.900
330	335	-.424	.086	-.208	-.876
330	336	-.415	.095	-.179	-.915
330	337	-.445	.106	-.181	-1.290
330	338	-.436	.106	-.163	-1.110
330	339	-.403	.097	-.151	-1.161
330	340	-.416	.102	-.125	-1.206
330	341	-.452	.105	-.153	-1.350
330	342	-.435	.100	-.161	-1.065
330	343	-.462	.104	-.201	-1.025
330	344	-.478	.115	-.215	-1.069
330	345	-.486	.105	-.204	-1.079
330	346	-.447	.091	-.192	-.940
330	347	-.459	.093	-.199	-.942
330	348	-.394	.099	-.085	-1.154
330	349	-.440	.104	-.099	-1.327
330	350	-.448	.118	-.077	-1.144
330	351	-.485	.132	-.114	-.990
330	352	-.403	.111	.057	-.898
330	353	-.350	.091	-.029	-.753
330	354	-.322	.094	.028	-.744
330	355	-.329	.092	-.037	-.746
330	356	-.240	.126	.114	-.799
330	357	-.276	.126	.041	-.795
330	358	-.236	.124	.081	-.794
330	359	-.340	.142	.150	-1.045
330	360	-.394	.119	-.087	-1.244
330	361	-.440	.125	-.118	-1.348
330	362	-.445	.136	-.127	-1.325
330	363	-.434	.139	.073	-.999
330	364	-.444	.194	.081	-1.329
330	365	-.219	.142	.221	-.946
330	366	-.186	.097	.133	-.866
330	367	-.217	.093	.091	-.578
330	368	-.226	.093	.093	-.560
330	369	-.217	.094	.104	-.599
330	370	-.293	.110	-.010	-.859
330	371	-.306	.105	-.004	-.811
330	372	-.408	.113	-.082	-1.678
330	373	-.412	.099	-.148	-1.105
330	374	-.416	.104	-.136	-1.214
330	401	-.365	.081	-.111	-.753
330	402	-.368	.079	-.087	-.751
330	403	-.364	.081	-.134	-.711
330	404	-.395	.082	-.120	-.818
330	405	-.360	.079	-.107	-1.166
330	406	-.380	.086	-.128	-.822
330	407	-.359	.078	-.116	-1.024
330	408	-.398	.082	-.164	-.909

WD	TAP	CPMEAN	CPRMS	CPMAX	CPMIN
330	409	-.367	.080	-.130	-.806
330	410	-.371	.084	-.083	-.835
330	411	-.362	.081	-.115	-.938
330	412	-.389	.074	-.174	-.790
330	413	-.370	.079	-.130	-.787
330	414	-.378	.084	-.096	-.753
330	415	-.377	.085	-.092	-.884
330	416	-.407	.080	-.157	-.806
330	417	-.371	.073	-.132	-.756
330	418	-.393	.086	-.135	-.917
330	419	-.386	.082	-.144	-.893
330	420	-.417	.081	-.178	-.921
330	421	-.383	.078	-.161	-.933
330	422	-.370	.078	-.153	-.876
330	423	-.363	.067	-.144	-.787
330	424	-.366	.066	-.169	-.749
330	425	-.362	.061	-.187	-.692
330	426	-.353	.059	-.191	-.652
330	427	-.359	.057	-.169	-.619
330	428	-.347	.058	-.183	-.585
330	429	-.374	.062	-.184	-.671
330	430	-.360	.059	-.182	-.613
330	431	-.356	.055	-.211	-.564
330	432	-.362	.055	-.194	-.602
330	433	-.347	.055	-.179	-.559
330	434	-.364	.055	-.184	-.563
330	435	-.386	.058	-.155	-.613
330	436	-.387	.059	-.204	-.730
330	437	-.374	.054	-.208	-.612
330	438	-.387	.053	-.212	-.650
330	439	-.362	.052	-.182	-.617
330	440	-.359	.055	-.206	-.609
330	441	-.433	.083	-.171	-1.189
330	442	-.447	.081	-.195	-1.015
330	443	-.414	.074	-.201	-.785
330	444	-.401	.070	-.134	-.832
330	445	-.376	.067	-.114	-.706
330	446	-.391	.067	-.139	-.690
330	447	-.538	.129	-.245	-1.313
330	448	-.538	.119	-.252	-1.084
330	449	-.517	.114	-.246	-1.105
330	450	-.528	.117	-.259	-1.220
330	451	-.489	.105	-.211	-1.004
330	452	-.472	.103	-.178	-1.184
330	453	-.263	.094	.014	-.718
330	454	-.294	.104	-.019	-.763
330	455	-.385	.144	-.014	-.968
330	456	-.568	.174	-.003	-1.398
330	457	-.527	.156	-.150	-1.423
330	458	-.563	.200	-.195	-3.101

APPENDIX A -- PRESSURE DATA: CONFIGURATION A; 1221 BRICKELL BUILDING

WD	TAP	CPMEAN	CPRMS	CPMAX	CPMIN
330	459	-.281	.187	.242	-1.308
330	460	-.444	.159	-.017	-1.272
330	461	-.287	.104	.039	-.723
330	462	-.290	.106	-.020	-.756
330	463	-.217	.085	.026	-.584
330	464	-.414	.132	-.094	-1.116
330	465	-.203	.090	.293	-.596
330	466	-.202	.115	.201	-.668
330	467	-.212	.084	.252	-.621
330	468	-.190	.082	.042	-.513
330	469	-.250	.104	.076	-.758
330	470	-.313	.137	.112	-1.144
330	471	-.446	.152	-.014	-1.065
330	472	-.189	.124	.353	-.678
330	501	-.202	.078	.219	-.493
330	502	.064	.097	.781	-.174
330	503	.061	.213	.889	-.638
330	504	-.201	.086	.142	-.690
330	505	-.402	.152	-.066	-1.210
330	506	-.185	.091	.091	-.549
330	507	-.308	.105	-.014	-.744
330	508	-.367	.116	-.053	-.839
330	509	-.251	.095	.043	-.653
330	510	-.424	.114	-.082	-.864
330	9124	.387	.158	.943	-.398
330	9140	-.266	.064	-.026	-.520
330	9213	.316	.206	.807	-.606
330	9218	-.187	.044	-.015	-.350
330	9317	-.376	.050	-.209	-.556
330	9322	-.389	.064	-.111	-.814
330	9348	-.420	.104	-.075	-1.131
330	9355	-.360	.096	-.049	-.802
340	101	.336	.143	.776	-.241
340	102	.241	.124	.616	-.280
340	103	-.002	.105	.375	-.385
340	104	.446	.152	.859	-.124
340	105	.504	.154	.971	-.002
340	106	-.029	.077	.257	-.344
340	107	.323	.141	.812	-.082
340	108	-.103	.069	.217	-.365
340	109	-.169	.064	.087	-.510
340	110	.179	.111	.557	-.172
340	111	-.176	.066	.076	-.435
340	112	.040	.081	.330	-.288
340	113	.228	.112	.611	-.134
340	114	.438	.140	.881	-.084
340	115	.474	.165	1.019	-.131
340	116	.489	.155	1.006	-.083
340	117	-.126	.060	.161	-.326
340	118	.026	.077	.351	-.238
340	119	.145	.119	.607	-.208
340	120	.372	.149	.801	-.068
340	121	.422	.162	.873	-.069
340	122	.412	.164	.877	-.117
340	123	.307	.169	.856	-.178
340	124	.341	.167	.820	-.107
340	125	-.181	.062	.182	-.445
340	126	-.040	.073	.373	-.297
340	127	.057	.107	.525	-.230
340	128	.268	.133	.719	-.080
340	129	.318	.155	.799	-.115
340	130	.349	.166	.929	-.105
340	131	.241	.184	.829	-.351
340	132	.338	.164	.903	-.117
340	133	.254	.136	.687	-.155
340	134	.286	.142	.742	-.063
340	135	.237	.167	.792	-.247
340	136	.220	.170	.784	-.237
340	137	.250	.162	.780	-.152
340	138	.217	.181	.879	-.349
340	139	.117	.195	.856	-.573
340	140	-.244	.069	.089	-.542
340	141	-.148	.070	.163	-.387
340	142	.010	.078	.498	-.205
340	143	.016	.095	.474	-.237
340	144	.130	.104	.545	-.124
340	145	.165	.142	.843	-.171
340	146	.190	.178	1.071	-.195
340	147	.072	.184	.901	-.356
340	148	-.226	.057	-.001	-.544
340	149	-.149	.051	.040	-.343
340	150	-.048	.050	.160	-.221
340	151	-.090	.059	.175	-.356
340	152	.023	.069	.393	-.189
340	153	.051	.096	.483	-.255
340	154	.087	.141	.695	-.349
340	155	-.021	.170	.745	-.479
340	156	-.216	.052	-.003	-.467
340	157	-.151	.045	.040	-.352
340	158	-.190	.055	.034	-.474
340	159	-.183	.097	.148	-.539
340	160	.065	.095	.482	-.225
340	161	-.057	.128	.576	-.426
340	162	.061	.080	.489	-.186
340	163	.002	.095	.422	-.558
340	164	.089	.133	.680	-.532
340	165	.092	.159	.824	-.607
340	166	-.413	.160	.186	-1.125
340	167	-.432	.312	.775	-1.425
340	168	-.269	.128	.065	-.800
340	169	.079	.115	.602	-.440
340	170	-.215	.061	.099	-.485
340	171	-.129	.056	.158	-.373
340	172	.241	.186	.900	-.213
340	173	.233	.189	.954	-.257
340	174	.163	.203	.881	-.338
340	201	.106	.235	.692	-.851
340	202	.080	.127	.488	-.645
340	203	.046	.081	.350	-.310
340	204	-.056	.062	.226	-.313
340	205	-.135	.049	.096	-.325
340	206	-.302	.051	-.136	-.499
340	207	.051	.244	.775	-.819
340	208	.155	.202	.642	-.794
340	209	.119	.090	.460	-.225
340	210	-.004	.064	.240	-.221
340	211	-.145	.046	.033	-.340
340	212	-.225	.043	-.054	-.400
340	213	-.071	.215	.660	-.721
340	214	-.013	.248	.653	-.713
340	215	.103	.095	.397	-.526
340	216	-.035	.054	.187	-.207
340	217	-.174	.038	-.020	-.293
340	218	-.254	.038	-.106	-.377
340	219	-.138	.194	.653	-.793
340	220	-.096	.232	.547	-.918
340	221	.033	.109	.319	-.749
340	222	-.083	.050	.161	-.325
340	223	-.201	.036	-.016	-.330
340	224	-.262	.036	-.144	-.391
340	225	-.040	.277	.719	-1.248
340	226	-.007	.193	.619	-.781
340	227	.009	.098	.364	-.460
340	228	-.102	.052	.133	-.310
340	229	-.244	.041	-.121	-.410
340	230	-.310	.049	-.160	-.539
340	231	-.083	.242	.565	-1.120
340	232	.005	.090	.343	-.398
340	233	-.057	.066	.225	-.352
340	234	-.128	.049	.111	-.302
340	235	-.251	.045	-.070	-.467
340	236	-.189	.218	.417	-.965
340	237	-.038	.079	.281	-.460
340	238	-.080	.058	.159	-.334
340	239	-.135	.048	.083	-.321
340	240	-.247	.046	-.047	-.441
340	241	-.279	.203	.448	-1.173
340	242	-.094	.082	.220	-.555
340	243	-.114	.059	.215	-.319
340	244	-.150	.056	.302	-.429

APPENDIX A -- PRESSURE DATA: CONFIGURATION A; 1221 BRICKELL BUILDING

WD	TAP	CPMEAN	CPRMS	CPMAX	CPMIN
340	245	-.235	.054	.013	-.422
340	246	-.422	.226	.434	-1.696
340	247	-.259	.213	.315	-1.275
340	248	-.153	.108	.190	-.931
340	249	-.192	.081	.114	-.815
340	250	-.256	.070	.064	-.675
340	251	-.285	.064	-.007	-.548
340	252	-.369	.181	.318	-1.485
340	253	-.308	.205	.345	-1.351
340	254	-.155	.096	.152	-.691
340	255	-.169	.054	.109	-.526
340	256	-.246	.055	.023	-.488
340	257	-.291	.058	-.074	-.566
340	258	-.319	.191	.418	-1.205
340	259	-.211	.155	.381	-.949
340	260	-.152	.069	.201	-.506
340	261	-.187	.052	.086	-.474
340	262	-.263	.057	-.063	-.508
340	263	-.303	.055	-.094	-.541
340	264	-.161	.155	.406	-1.035
340	265	-.097	.107	.307	-.796
340	266	-.094	.059	.190	-.298
340	267	-.158	.048	.083	-.349
340	268	-.252	.057	.010	-.481
340	269	-.303	.068	-.105	-.613
340	270	-.107	.241	.751	-.900
340	271	-.043	.234	.629	-1.134
340	272	-.222	.036	-.067	-.341
340	273	-.286	.037	-.156	-.461
340	274	-.104	.267	.718	-1.369
340	275	.010	.225	.573	-.933
340	276	.032	.153	.512	-.670
340	277	-.166	.044	.042	-.322
340	278	-.218	.040	-.049	-.382
340	279	-.280	.043	-.114	-.472
340	280	.020	.165	.485	-.759
340	281	-.157	.047	.077	-.336
340	282	-.128	.233	.529	-1.117
340	283	-.023	.143	.368	-.998
340	284	-.147	.049	.046	-.317
340	285	-.252	.045	-.075	-.429
340	301	-.344	.069	-.115	-.641
340	302	-.348	.068	-.118	-.647
340	303	-.338	.062	-.108	-.598
340	304	-.345	.062	-.123	-.601
340	305	-.352	.068	-.124	-.657
340	306	-.343	.057	-.144	-.612
340	307	-.357	.065	-.168	-.733
340	308	-.334	.057	-.161	-.597
340	309	-.360	.065	-.169	-.663

WD	TAP	CPMEAN	CPRMS	CPMAX	CPMIN
340	310	-.362	.065	-.125	-.654
340	311	-.332	.054	-.141	-.553
340	312	-.339	.054	-.145	-.554
340	313	-.339	.054	-.144	-.564
340	314	-.344	.056	-.156	-.616
340	315	-.351	.054	-.166	-.599
340	316	-.348	.060	-.168	-.634
340	317	-.363	.046	-.210	-.571
340	318	-.343	.044	-.211	-.541
340	319	-.355	.048	-.213	-.537
340	320	-.357	.050	-.203	-.511
340	321	-.388	.055	-.210	-.595
340	322	-.371	.057	-.151	-.658
340	323	-.361	.059	-.199	-.829
340	324	-.361	.058	-.210	-.762
340	325	-.397	.069	-.217	-.802
340	326	-.364	.056	-.199	-.637
340	327	-.373	.051	-.226	-.614
340	328	-.379	.054	-.205	-.719
340	329	-.414	.064	-.210	-.741
340	330	-.404	.067	-.170	-.690
340	331	-.351	.078	-.137	-.908
340	332	-.357	.076	-.165	-.793
340	333	-.378	.066	-.199	-.669
340	334	-.362	.062	-.190	-.649
340	335	-.361	.056	-.185	-.600
340	336	-.345	.065	-.175	-.658
340	337	-.368	.068	-.187	-.639
340	338	-.358	.068	-.190	-.699
340	339	-.343	.067	-.135	-.680
340	340	-.351	.068	-.160	-.712
340	341	-.380	.070	-.194	-.746
340	342	-.367	.071	-.190	-.706
340	343	-.392	.072	-.217	-.831
340	344	-.402	.078	-.201	-.876
340	345	-.423	.074	-.131	-.802
340	346	-.417	.082	-.144	-.752
340	347	-.431	.086	-.156	-.881
340	348	-.354	.072	-.127	-.764
340	349	-.386	.071	-.178	-.776
340	350	-.382	.074	-.139	-.747
340	351	-.422	.098	-.183	-.858
340	352	-.401	.077	-.170	-.693
340	353	-.430	.095	-.131	-.755
340	354	-.429	.100	-.125	-.907
340	355	-.407	.104	-.035	-.979
340	356	-.398	.129	.024	-.876
340	357	-.424	.129	-.003	-.914
340	358	-.396	.139	.052	-.965
340	359	-.401	.115	.036	-.931

WD	TAP	CPMEAN	CPRMS	CPMAX	CPMIN
340	360	-.381	.085	-.156	-.940
340	361	-.415	.089	-.194	-1.007
340	362	-.409	.100	-.187	-1.125
340	363	-.410	.113	-.051	-1.204
340	364	-.445	.153	.012	-1.371
340	365	-.414	.132	.006	-.970
340	366	-.358	.110	.043	-.814
340	367	-.365	.109	.073	-.760
340	368	-.365	.102	.008	-.689
340	369	-.382	.099	-.031	-.734
340	370	-.375	.115	-.015	-.900
340	371	-.381	.116	-.066	-1.051
340	372	-.336	.061	-.178	-.669
340	373	-.344	.064	-.139	-.638
340	374	-.345	.065	-.131	-.630
340	401	-.374	.089	-.110	-.846
340	402	-.404	.094	-.115	-.790
340	403	-.413	.109	-.108	-1.110
340	404	-.431	.107	-.141	-1.142
340	405	-.374	.089	-.110	-1.104
340	406	-.383	.093	-.110	-.836
340	407	-.373	.087	-.119	-.967
340	408	-.414	.096	-.085	-.821
340	409	-.402	.100	-.051	-.850
340	410	-.407	.108	-.071	-1.086
340	411	-.395	.103	-.092	-.876
340	412	-.412	.093	-.145	-.884
340	413	-.375	.088	-.115	-.761
340	414	-.399	.094	-.105	-.904
340	415	-.400	.094	-.132	-1.025
340	416	-.418	.086	-.201	-.963
340	417	-.382	.079	-.156	-.843
340	418	-.390	.088	-.126	-.799
340	419	-.377	.078	-.123	-.719
340	420	-.407	.083	-.152	-.886
340	421	-.380	.084	-.091	-.852
340	422	-.383	.083	-.174	-.826
340	423	-.397	.083	-.166	-1.087
340	424	-.379	.069	-.164	-.691
340	425	-.376	.062	-.210	-.658
340	426	-.363	.060	-.189	-.615
340	427	-.358	.053	-.172	-.582
340	428	-.344	.056	-.172	-.600
340	429	-.402	.075	-.189	-.783
340	430	-.386	.070	-.201	-.718
340	431	-.360	.054	-.194	-.581
340	432	-.354	.052	-.192	-.542
340	433	-.339	.053	-.189	-.524
340	434	-.362	.053	-.215	-.547
340	435	-.401	.073	-.218	-.738

APPENDIX A -- PRESSURE DATA: CONFIGURATION A: 1221 BRICKELL BUILDING

WD	TAP	CPMEAN	CPRMS	CPMAX	CPMIN
340	436	-.393	.071	-.210	-.850
340	437	-.371	.058	-.200	-.586
340	438	-.393	.055	-.194	-.605
340	439	-.351	.054	-.149	-.553
340	440	-.362	.053	-.187	-.558
340	441	-.476	.105	-.153	-1.190
340	442	-.493	.102	-.262	-1.155
340	443	-.444	.084	-.223	-1.156
340	444	-.424	.076	-.213	-.961
340	445	-.404	.072	-.193	-.755
340	446	-.428	.073	-.213	-.778
340	447	-.522	.131	-.211	-1.180
340	448	-.513	.106	-.252	-.993
340	449	-.513	.114	-.234	-1.166
340	450	-.530	.107	-.271	-1.122
340	451	-.491	.099	-.247	-.971
340	452	-.476	.098	-.272	-1.099
340	453	-.351	.094	-.055	-.800
340	454	-.390	.106	-.082	-.874
340	455	-.391	.115	-.002	-1.034
340	456	-.471	.131	-.019	-1.527
340	457	-.469	.126	-.208	-1.509
340	458	-.507	.156	-.236	-2.378
340	459	-.435	.192	.013	-1.422
340	460	-.466	.165	-.091	-1.651
340	461	-.345	.085	-.070	-.666
340	462	-.403	.121	-.072	-1.100
340	463	-.320	.086	-.011	-.718
340	464	-.483	.139	-.132	-1.014
340	465	-.321	.124	.060	-.763
340	466	-.188	.161	.384	-1.354
340	467	-.326	.115	.053	-.769
340	468	-.336	.097	-.004	-.673
340	469	-.357	.100	.029	-.855
340	470	-.487	.179	.018	-1.347
340	471	-.507	.162	-.023	-1.330
340	472	-.212	.181	.489	-.853
340	501	-.210	.051	.073	-.483
340	502	-.021	.069	.316	-.362
340	503	-.067	.216	.690	-.914
340	504	-.350	.107	-.024	-.786
340	505	-.483	.178	-.077	-1.248
340	506	-.277	.100	.161	-.624
340	507	-.381	.094	-.117	-.814
340	508	-.431	.116	-.096	-1.055
340	509	-.286	.082	-.006	-.703
340	510	-.430	.095	-.115	-.921
340	9124	.340	.166	1.013	-.086
340	9140	-.265	.073	.010	-.618
340	9213	-.083	.208	.740	-.749

WD	TAP	CPMEAN	CPRMS	CPMAX	CPMIN
340	9218	-.241	.041	-.101	-.395
340	9317	-.367	.047	-.234	-.570
340	9322	-.367	.056	-.168	-.601
340	9348	-.363	.072	-.187	-.889
340	9355	-.408	.099	-.051	-.816
350	101	.351	.139	.885	-.104
350	102	.306	.126	.730	-.181
350	103	.091	.112	.457	-.349
350	104	.477	.150	.925	.037
350	105	.417	.165	.915	-.075
350	106	.048	.093	.335	-.328
350	107	.376	.167	.908	-.134
350	108	-.021	.083	.259	-.436
350	109	-.079	.075	.174	-.459
350	110	.297	.124	.663	-.128
350	111	-.074	.082	.266	-.366
350	112	.143	.103	.535	-.181
350	113	.297	.131	.732	-.104
350	114	.461	.156	.915	-.064
350	115	.422	.171	.949	-.138
350	116	.368	.152	.948	-.098
350	117	-.052	.077	.291	-.374
350	118	.103	.099	.525	-.286
350	119	.221	.143	.760	-.277
350	120	.394	.165	.956	-.110
350	121	.365	.164	.865	-.191
350	122	.292	.157	.812	-.216
350	123	.240	.171	.818	-.209
350	124	.217	.158	.753	-.281
350	125	-.129	.070	.330	-.351
350	126	.016	.085	.473	-.233
350	127	.112	.124	.549	-.221
350	128	.279	.148	.822	-.084
350	129	.311	.165	.927	-.127
350	130	.292	.167	.878	-.179
350	131	.144	.193	.828	-.538
350	132	.334	.168	.951	-.162
350	133	.271	.158	.798	-.132
350	134	.294	.161	.826	-.106
350	135	.212	.183	.835	-.272
350	136	.111	.167	.670	-.329
350	137	.159	.146	.654	-.219
350	138	.052	.154	.761	-.352
350	139	-.073	.158	.564	-.528
350	140	-.188	.069	.128	-.476
350	141	-.090	.073	.179	-.367
350	142	.064	.090	.466	-.165
350	143	.061	.117	.692	-.269
350	144	.148	.123	.796	-.165
350	145	.105	.135	.785	-.276

WD	TAP	CPMEAN	CPRMS	CPMAX	CPMIN
350	146	.053	.136	.574	-.361
350	147	-.108	.123	.397	-.495
350	148	-.199	.059	.009	-.469
350	149	-.128	.054	.142	-.402
350	150	-.037	.057	.186	-.249
350	151	-.083	.066	.230	-.318
350	152	.009	.067	.313	-.241
350	153	.003	.079	.408	-.246
350	154	-.002	.097	.389	-.382
350	155	-.136	.120	.382	-.509
350	156	-.204	.048	-.010	-.436
350	157	-.138	.044	.017	-.338
350	158	-.141	.047	.015	-.406
350	159	-.067	.092	.256	-.419
350	160	.090	.104	.542	-.248
350	161	.038	.130	.517	-.390
350	162	.095	.103	.525	-.153
350	163	-.018	.093	.419	-.354
350	164	-.010	.100	.397	-.433
350	165	-.051	.133	.483	-.489
350	166	-.243	.128	.160	-.744
350	167	-.144	.253	.751	-.897
350	168	-.165	.092	.085	-.686
350	169	.161	.153	.780	-.306
350	170	-.200	.059	.128	-.602
350	171	-.121	.054	.277	-.345
350	172	.154	.162	.740	-.312
350	173	.145	.159	.731	-.307
350	174	.018	.164	.636	-.485
350	201	-.448	.241	.387	-1.548
350	202	-.283	.275	.399	-1.224
350	203	-.064	.063	.225	-.464
350	204	-.131	.044	.051	-.367
350	205	-.176	.040	-.048	-.335
350	206	-.315	.048	-.170	-.490
350	207	-.441	.186	.394	-1.140
350	208	-.350	.263	.370	-1.782
350	209	-.005	.097	.209	-.737
350	210	-.080	.044	.081	-.284
350	211	-.185	.039	-.051	-.375
350	212	-.233	.043	-.078	-.402
350	213	-.412	.173	.291	-1.200
350	214	-.402	.200	.431	-1.229
350	215	-.168	.231	.242	-1.145
350	216	-.110	.060	.056	-.545
350	217	-.198	.037	-.057	-.398
350	218	-.247	.041	-.100	-.396
350	219	-.409	.185	.404	-1.319
350	220	-.418	.198	.519	-1.344
350	221	-.207	.210	.242	-1.102

APPENDIX A -- PRESSURE DATA: CONFIGURATION A: 1221 BRICKELL BUILDING

WD	TAP	CPMEAN	CPRMS	CPMAX	CPMIN
350	222	-.152	.070	.030	-.829
350	223	-.220	.040	-.082	-.530
350	224	-.255	.040	-.114	-.447
350	225	-.407	.367	.693	-2.417
350	226	-.256	.242	.476	-1.159
350	227	-.139	.144	.282	-.917
350	228	-.167	.058	.077	-.527
350	229	-.246	.043	-.060	-.445
350	230	-.298	.061	-.082	-.556
350	231	-.380	.310	.432	-2.225
350	232	-.125	.119	.294	-1.073
350	233	-.144	.079	.141	-.588
350	234	-.174	.051	.005	-.477
350	235	-.237	.042	-.098	-.448
350	236	-.365	.232	.365	-1.207
350	237	-.142	.116	.167	-.777
350	238	-.136	.062	.061	-.423
350	239	-.168	.047	.019	-.375
350	240	-.229	.041	-.114	-.427
350	241	-.386	.201	.247	-1.583
350	242	-.193	.119	.135	-.874
350	243	-.170	.068	.050	-.608
350	244	-.182	.052	.047	-.407
350	245	-.231	.046	-.092	-.424
350	246	-.502	.241	.254	-1.738
350	247	-.392	.218	.228	-1.305
350	248	-.271	.140	.110	-1.277
350	249	-.242	.098	.104	-.824
350	250	-.255	.073	.034	-.715
350	251	-.264	.063	-.037	-.608
350	252	-.422	.187	.347	-1.664
350	253	-.400	.205	.263	-1.616
350	254	-.256	.127	.106	-.860
350	255	-.190	.056	.024	-.514
350	256	-.231	.053	-.017	-.548
350	257	-.257	.057	-.076	-.529
350	258	-.359	.164	.189	-1.314
350	259	-.302	.158	.113	-1.291
350	260	-.210	.100	.117	-1.075
350	261	-.198	.055	.001	-.494
350	262	-.239	.052	-.053	-.466
350	263	-.269	.053	-.115	-.500
350	264	-.172	.130	.374	-.876
350	265	-.148	.118	.282	-.903
350	266	-.117	.067	.164	-.430
350	267	-.156	.048	.064	-.356
350	268	-.228	.049	-.067	-.413
350	269	-.271	.061	-.111	-.562
350	270	-.426	.228	.380	-1.682
350	271	-.370	.268	.417	-1.616
350	272	-.249	.048	-.101	-.489
350	273	-.299	.063	-.128	-.659
350	274	-.447	.296	.448	-2.007
350	275	-.329	.306	.404	-1.593
350	276	-.205	.230	.323	-1.277
350	277	-.210	.049	-.038	-.662
350	278	-.248	.046	-.088	-.507
350	279	-.314	.069	-.147	-.686
350	280	-.216	.229	.304	-1.260
350	281	-.199	.047	.009	-.431
350	282	-.398	.285	.351	-1.951
350	283	-.167	.189	.309	-1.137
350	284	-.174	.048	.005	-.465
350	285	-.238	.043	-.098	-.394
350	301	-.309	.070	-.094	-.672
350	302	-.313	.070	-.086	-.659
350	303	-.299	.061	-.102	-.565
350	304	-.305	.062	-.104	-.581
350	305	-.308	.073	-.082	-.829
350	306	-.302	.056	-.112	-.537
350	307	-.322	.069	-.102	-.709
350	308	-.309	.058	-.126	-.617
350	309	-.325	.067	-.091	-.690
350	310	-.330	.067	-.115	-.683
350	311	-.293	.049	-.123	-.469
350	312	-.299	.050	-.120	-.513
350	313	-.296	.050	-.125	-.495
350	314	-.302	.049	-.117	-.500
350	315	-.315	.054	-.176	-.599
350	316	-.317	.061	-.138	-.581
350	317	-.327	.052	-.136	-.660
350	318	-.314	.051	-.143	-.690
350	319	-.320	.047	-.195	-.560
350	320	-.316	.045	-.166	-.478
350	321	-.343	.049	-.194	-.541
350	322	-.336	.054	-.171	-.564
350	323	-.422	.156	-.163	-1.231
350	324	-.395	.122	-.110	-.998
350	325	-.366	.087	-.125	-.766
350	326	-.331	.065	-.128	-.616
350	327	-.329	.053	-.172	-.632
350	328	-.329	.048	-.175	-.576
350	329	-.374	.062	-.146	-.649
350	330	-.381	.069	-.126	-.645
350	331	-.272	.056	-.086	-.547
350	332	-.279	.054	-.089	-.536
350	333	-.305	.056	-.123	-.589
350	334	-.303	.053	-.154	-.555
350	335	-.307	.053	-.156	-.651
350	336	-.274	.060	-.112	-.597
350	337	-.296	.062	-.148	-.566
350	338	-.290	.060	-.143	-.578
350	339	-.271	.055	-.107	-.465
350	340	-.283	.059	-.100	-.654
350	341	-.306	.060	-.125	-.734
350	342	-.298	.060	-.150	-.602
350	343	-.319	.067	-.140	-.698
350	344	-.317	.063	-.119	-.614
350	345	-.359	.068	-.153	-.734
350	346	-.398	.087	-.147	-.827
350	347	-.423	.091	-.131	-.910
350	348	-.301	.079	-.128	-.750
350	349	-.330	.079	-.164	-.805
350	350	-.341	.091	-.178	-.794
350	351	-.339	.083	-.100	-.824
350	352	-.299	.069	-.105	-.644
350	353	-.350	.097	-.100	-.798
350	354	-.372	.105	-.034	-.777
350	355	-.363	.100	-.048	-.766
350	356	-.353	.111	-.004	-.771
350	357	-.371	.112	-.049	-.780
350	358	-.346	.111	.009	-.839
350	359	-.271	.096	.036	-.660
350	360	-.333	.101	-.138	-.909
350	361	-.365	.107	-.169	-.954
350	362	-.366	.118	-.135	-1.047
350	363	-.319	.103	-.034	-.849
350	364	-.300	.097	.040	-.916
350	365	-.346	.095	-.061	-.692
350	366	-.293	.082	-.015	-.585
350	367	-.270	.090	-.025	-.671
350	368	-.268	.088	-.070	-.726
350	369	-.289	.081	-.065	-.633
350	370	-.358	.109	-.013	-.805
350	371	-.346	.109	.020	-.899
350	372	-.269	.053	-.131	-.493
350	373	-.286	.061	-.109	-.651
350	374	-.287	.063	-.114	-.674
350	401	-.355	.101	-.034	-.822
350	402	-.390	.126	-.030	-.935
350	403	-.389	.134	-.028	-1.231
350	404	-.379	.106	-.051	-1.097
350	405	-.362	.097	-.101	-.959
350	406	-.348	.101	-.000	-.834
350	407	-.360	.096	-.097	-.934
350	408	-.349	.097	-.017	-.734
350	409	-.367	.111	.018	-.853
350	410	-.377	.111	-.075	-1.106
350	411	-.363	.094	-.067	-.839
350	412	-.375	.083	-.127	-.780

APPENDIX A -- PRESSURE DATA: CONFIGURATION A: 1221 BRICKELL BUILDING

WD	TAP	CPMEAN	CPRMS	CPMAX	CPMIN
350	413	-.355	.093	-.093	-.746
350	414	-.383	.105	-.097	-1.021
350	415	-.380	.098	-.131	-.898
350	416	-.390	.087	-.173	-.856
350	417	-.356	.078	-.152	-.716
350	418	-.380	.103	-.057	-1.093
350	419	-.360	.082	-.093	-.851
350	420	-.381	.085	-.132	-.927
350	421	-.358	.082	-.057	-.886
350	422	-.358	.091	-.156	-1.560
350	423	-.365	.096	-.112	-.888
350	424	-.360	.083	-.103	-.884
350	425	-.348	.074	-.145	-.874
350	426	-.334	.068	-.131	-.877
350	427	-.328	.059	-.140	-.614
350	428	-.315	.058	-.118	-.590
350	429	-.395	.096	-.155	-1.205
350	430	-.367	.085	-.147	-1.007
350	431	-.335	.062	-.108	-.811
350	432	-.329	.054	-.179	-.607
350	433	-.311	.052	-.163	-.521
350	434	-.341	.052	-.198	-.554
350	435	-.419	.106	-.193	-1.072
350	436	-.415	.104	-.158	-1.181
350	437	-.373	.074	-.199	-.803
350	438	-.376	.063	-.203	-.759

WD	TAP	CPMEAN	CPRMS	CPMAX	CPMIN
350	439	-.334	.058	-.137	-.596
350	440	-.340	.055	-.154	-.593
350	441	-.464	.117	-.180	-1.115
350	442	-.500	.117	-.179	-1.111
350	443	-.449	.094	-.137	-.843
350	444	-.436	.085	-.177	-.861
350	445	-.414	.081	-.163	-.769
350	446	-.447	.082	-.186	-.797
350	447	-.499	.134	-.181	-1.113
350	448	-.481	.111	-.128	-.977
350	449	-.490	.119	-.215	-1.134
350	450	-.530	.118	-.259	-1.368
350	451	-.487	.106	-.244	-1.034
350	452	-.487	.102	-.255	-1.187
350	453	-.273	.075	-.053	-.609
350	454	-.306	.088	-.063	-.705
350	455	-.291	.113	-.009	-.780
350	456	-.422	.149	.031	-1.130
350	457	-.479	.156	-.146	-1.364
350	458	-.550	.208	-.163	-1.779
350	459	-.342	.136	.017	-1.049
350	460	-.398	.145	.020	-1.303
350	461	-.278	.071	-.063	-.568
350	462	-.338	.115	-.087	-.943
350	463	-.262	.063	.038	-.557
350	464	-.365	.103	-.113	-.823

WD	TAP	CPMEAN	CPRMS	CPMAX	CPMIN
350	465	-.280	.092	.068	-.619
350	466	-.075	.126	.363	-.631
350	467	-.277	.087	.031	-.597
350	468	-.251	.071	-.050	-.538
350	469	-.287	.090	-.070	-.669
350	470	-.372	.146	-.084	-1.165
350	471	-.383	.139	.118	-1.161
350	472	.002	.176	.554	-.574
350	501	-.224	.047	.170	-.406
350	502	-.145	.105	.171	-.800
350	503	-.355	.267	.394	-1.727
350	504	-.261	.085	-.048	-.608
350	505	-.284	.133	-.019	-.866
350	506	-.225	.085	.083	-.564
350	507	-.302	.077	-.054	-.651
350	508	-.304	.099	-.048	-.775
350	509	-.209	.062	.020	-.464
350	510	-.344	.092	-.108	-.805
350	9124	.206	.173	.833	-.266
350	9140	-.210	.080	.160	-.546
350	9213	-.429	.164	.235	-1.118
350	9218	-.241	.040	-.079	-.397
350	9317	-.347	.049	-.205	-.566
350	9322	-.344	.056	-.137	-.555
350	9348	-.320	.084	-.077	-.845
350	9355	-.343	.092	-.075	-.726

APPENDIX A -- PRESSURE DATA: CONFIGURATION B: 1221 BRICKELL BUILDING

WD	TAP	CPMEAN	CPRMS	CPMAX	CPMIN
0	138	.029	.146	.596	-.385
0	139	-.004	.139	.522	-.380
0	149	-.134	.060	.161	-.333
0	170	-.190	.059	.019	-.553
0	171	-.104	.055	.155	-.312
0	201	-.909	.320	-.072	-2.579
0	206	-.276	.053	-.028	-.479
0	225	-.844	.429	.116	-2.842
0	230	-.284	.066	-.069	-.633
0	270	-.708	.259	.033	-2.041
0	273	-.398	.097	-.003	-.861
0	274	-.785	.343	.106	-2.995
0	279	-.336	.088	-.110	-.733
0	282	-.694	.245	.073	-1.913
0	285	-.276	.054	-.091	-.783
0	337	-.230	.052	-.070	-.480
0	339	-.236	.056	-.098	-.548
0	354	-.333	.097	-.092	-.796
0	370	-.382	.104	-.116	-.985
0	371	-.323	.094	-.085	-.762
0	372	-.247	.055	-.091	-.568
0	373	-.239	.053	-.089	-.513
0	406	-.355	.105	-.008	-.836
0	407	-.383	.094	-.131	-.994
0	408	-.308	.098	.072	-.799
0	412	-.370	.101	-.092	-.971
0	453	-.306	.067	-.108	-.587
0	458	-.485	.186	-.087	-1.691
2	138	.030	.129	.564	-.454
2	139	-.001	.126	.475	-.466
2	149	-.135	.057	.167	-.379
2	170	-.187	.058	.032	-.562
2	171	-.105	.053	.130	-.300
2	201	-.945	.311	-.203	-2.514
2	206	-.282	.057	-.048	-.512
2	225	-.913	.459	.085	-3.347
2	230	-.282	.077	-.059	-.862
2	270	-.724	.276	-.056	-2.107
2	273	-.396	.103	-.058	-1.053
2	274	-.813	.378	-.014	-2.968
2	279	-.333	.093	-.078	-.870
2	282	-.769	.250	.016	-2.283
2	285	-.286	.066	-.053	-.741
2	337	-.235	.057	-.067	-.511
2	339	-.232	.056	-.083	-.539
2	354	-.333	.094	-.056	-.869
2	370	-.382	.100	-.107	-1.101
2	371	-.323	.091	-.077	-.966
2	372	-.236	.055	-.078	-.558
2	373	-.226	.053	-.081	-.489
2	406	-.341	.101	.045	-.774
2	407	-.388	.107	-.147	-1.231
2	408	-.310	.096	.016	-.727
2	412	-.379	.109	-.116	-1.326
2	453	-.301	.062	-.110	-.577
2	458	-.478	.176	-.064	-1.612
4	138	.020	.134	.583	-.352
4	139	-.009	.130	.551	-.401
4	149	-.137	.056	.146	-.343
4	170	-.185	.058	.014	-.448
4	171	-.108	.052	.148	-.293
4	201	-.909	.292	-.230	-2.375
4	206	-.290	.063	-.020	-.588
4	225	-.926	.469	.009	-3.446
4	230	-.291	.083	.029	-.769
4	270	-.765	.284	-.115	-2.302
4	273	-.406	.112	-.035	-1.118
4	274	-.865	.397	-.131	-3.560
4	279	-.336	.099	-.025	-.828
4	282	-.768	.243	-.077	-2.335
4	285	-.288	.070	-.078	-.803
4	337	-.225	.052	-.060	-.438
4	339	-.227	.053	-.071	-.520
4	354	-.329	.090	-.105	-.908
4	370	-.378	.097	-.116	-1.161
4	371	-.319	.087	-.052	-.923
4	372	-.230	.056	-.088	-.606
4	373	-.221	.054	-.090	-.549
4	406	-.342	.100	.033	-.760
4	407	-.413	.113	-.129	-1.101
4	408	-.310	.097	.056	-.730
4	412	-.407	.120	-.142	-1.353
4	453	-.305	.060	-.071	-.563
4	458	-.489	.187	-.062	-1.702
6	138	.024	.132	.552	-.339
6	139	-.009	.126	.529	-.373
6	149	-.134	.060	.165	-.434
6	170	-.186	.063	.058	-.641
6	171	-.107	.053	.107	-.337
6	201	-.846	.286	-.196	-2.447
6	206	-.299	.073	-.051	-.673
6	225	-.914	.469	.133	-3.142
6	230	-.299	.100	-.035	-1.145
6	270	-.747	.282	-.080	-2.298
6	273	-.420	.130	-.020	-1.259
6	274	-.817	.364	-.011	-3.019
6	279	-.326	.104	-.005	-1.027
6	282	-.759	.240	-.184	-2.252
6	285	-.293	.076	.056	-.845
6	337	-.224	.053	-.063	-.484
6	339	-.229	.058	-.025	-.511
6	354	-.350	.099	-.050	-.782
6	370	-.403	.106	-.099	-.970
6	371	-.341	.097	-.055	-.784
6	372	-.231	.053	-.082	-.565
6	373	-.220	.049	-.077	-.444
6	406	-.350	.106	.056	-.810
6	407	-.446	.133	-.147	-1.912
6	408	-.313	.100	.107	-.700
6	412	-.424	.114	-.163	-1.282
6	453	-.293	.057	-.094	-.602
6	458	-.469	.198	-.024	-2.202
8	138	.025	.135	.556	-.351
8	139	-.004	.129	.565	-.383
8	149	-.118	.060	.166	-.342
8	170	-.167	.063	.177	-.501
8	171	-.091	.052	.139	-.308
8	201	-.779	.282	-.124	-2.237
8	206	-.278	.079	-.005	-.819
8	225	-.809	.448	.073	-3.122
8	230	-.280	.099	-.050	-1.007
8	270	-.727	.290	-.041	-2.271
8	273	-.403	.129	-.056	-1.269
8	274	-.790	.378	.041	-3.293
8	279	-.314	.109	-.041	-.929
8	282	-.759	.270	-.048	-2.202
8	285	-.274	.077	-.037	-.660
8	337	-.204	.054	-.053	-.472
8	339	-.208	.055	-.015	-.472
8	354	-.296	.096	-.094	-1.013
8	370	-.343	.099	-.130	-1.000
8	371	-.287	.090	-.078	-.883
8	372	-.218	.056	-.076	-.486
8	373	-.209	.053	-.077	-.429
8	406	-.329	.104	.076	-.751
8	407	-.438	.122	-.127	-1.301
8	408	-.295	.099	.061	-.862
8	412	-.421	.125	-.156	-1.152
8	453	-.269	.057	-.103	-.511
8	458	-.439	.194	.046	-1.738
10	138	.000	.135	.630	-.499
10	139	-.031	.125	.461	-.457
10	149	-.113	.065	.185	-.402
10	170	-.163	.068	.184	-.506
10	171	-.086	.055	.202	-.330
10	201	-.676	.246	-.120	-2.145
10	206	-.295	.095	.047	-.915
10	225	-.783	.420	.019	-3.083
10	230	-.284	.107	.007	-.850
10	270	-.694	.290	-.024	-2.093

APPENDIX A -- PRESSURE DATA: CONFIGURATION B: 1221 BRICKELL BUILDING

WD	TAP	CPMEAN	CPRMS	CPMAX	CPMIN
10	273	-.403	.139	-.040	-1.097
10	274	-.759	.388	-.048	-2.839
10	279	-.321	.125	-.051	-1.216
10	282	-.757	.278	.114	-2.357
10	285	-.279	.089	.002	-.843
10	337	-.199	.056	-.048	-.491
10	339	-.206	.068	.019	-.745
10	354	-.282	.092	-.085	-.779
10	370	-.332	.097	-.133	-.863
10	371	-.275	.088	-.076	-.740
10	372	-.208	.062	-.036	-.645
10	373	-.197	.059	-.043	-.634
10	406	-.322	.106	.052	-.828
10	407	-.482	.152	-.153	-1.722
10	408	-.300	.105	.162	-.690
10	412	-.458	.139	-.152	-1.148
10	453	-.272	.060	-.096	-.542
10	458	-.447	.186	-.048	-1.645
12	138	-.011	.128	.573	-.425
12	139	-.042	.122	.487	-.483
12	149	-.109	.065	.230	-.392
12	170	-.156	.070	.250	-.513
12	171	-.086	.054	.201	-.317
12	201	-.612	.216	-.172	-2.642
12	206	-.312	.108	.104	-1.075
12	225	-.732	.378	.002	-3.077
12	230	-.321	.134	.031	-1.106
12	270	-.655	.289	-.058	-2.738
12	273	-.444	.174	-.010	-1.756
12	274	-.699	.371	-.054	-3.456
12	279	-.362	.158	.124	-1.219
12	282	-.863	.318	.038	-2.627
12	285	-.315	.112	.072	-.931
12	337	-.220	.072	-.041	-.563
12	339	-.209	.068	.004	-.559
12	354	-.294	.119	-.066	-1.377
12	370	-.346	.125	-.109	-1.719
12	371	-.287	.113	-.066	-1.248
12	372	-.218	.074	-.025	-.749
12	373	-.207	.069	-.036	-.668
12	406	-.334	.115	.069	-.855
12	407	-.510	.159	-.119	-1.689
12	408	-.300	.113	.074	-.773
12	412	-.480	.145	-.157	-1.343
12	453	-.261	.060	-.109	-.575
12	458	-.433	.209	.004	-2.189
14	138	-.037	.122	.467	-.518
14	139	-.069	.118	.447	-.468
14	149	-.062	.063	.259	-.299
14	170	-.124	.071	.167	-.475

WD	TAP	CPMEAN	CPRMS	CPMAX	CPMIN
14	171	-.069	.056	.290	-.266
14	201	-.574	.206	-.160	-1.940
14	206	-.281	.120	.116	-.970
14	225	-.698	.369	-.017	-3.827
14	230	-.305	.129	.001	-1.022
14	270	-.657	.263	-.054	-2.465
14	273	-.396	.164	-.011	-1.219
14	274	-.672	.314	.003	-2.806
14	279	-.336	.143	-.034	-1.414
14	282	-.791	.306	-.086	-2.230
14	285	-.255	.104	.177	-.779
14	337	-.188	.066	.018	-.707
14	339	-.194	.069	-.018	-.646
14	354	-.256	.104	-.072	-1.003
14	370	-.258	.107	-.075	-1.156
14	371	-.242	.100	-.051	-.984
14	372	-.193	.061	-.009	-.574
14	373	-.192	.056	-.023	-.480
14	406	-.284	.112	.113	-.821
14	407	-.533	.164	-.164	-1.797
14	408	-.304	.121	.141	-.912
14	412	-.528	.162	-.098	-1.712
14	453	-.208	.055	-.075	-.478
14	458	-.365	.207	.067	-2.355
16	138	-.035	.117	.488	-.414
16	139	-.067	.113	.451	-.427
16	149	-.055	.067	.353	-.292
16	170	-.111	.080	.381	-.484
16	171	-.053	.067	.227	-.280
16	201	-.536	.181	-.149	-1.715
16	206	-.302	.129	.134	-1.044
16	225	-.683	.357	-.044	-2.411
16	230	-.327	.142	.118	-1.222
16	270	-.614	.252	-.094	-2.255
16	273	-.411	.180	-.016	-1.337
16	274	-.633	.327	-.039	-3.232
16	279	-.370	.165	-.032	-1.451
16	282	-.846	.326	-.030	-2.398
16	285	-.284	.119	.038	-.918
16	337	-.198	.068	.015	-.613
16	339	-.198	.072	.001	-.833
16	354	-.279	.115	-.065	-1.012
16	370	-.283	.117	-.088	-1.128
16	371	-.264	.109	-.064	-.986
16	372	-.202	.067	.010	-.701
16	373	-.200	.060	-.052	-.541
16	406	-.292	.117	.119	-.797
16	407	-.575	.189	-.170	-1.886
16	408	-.301	.122	.111	-.805
16	412	-.566	.184	-.198	-1.498

WD	TAP	CPMEAN	CPRMS	CPMAX	CPMIN
16	453	-.214	.060	-.043	-.530
16	458	-.364	.210	.094	-1.800
18	138	-.046	.114	.477	-.452
18	139	-.082	.110	.371	-.480
18	149	-.031	.074	.346	-.302
18	170	-.090	.086	.241	-.399
18	171	-.038	.072	.311	-.273
18	201	-.484	.148	-.140	-1.586
18	206	-.331	.140	.119	-1.177
18	225	-.634	.323	-.009	-3.409
18	230	-.327	.137	.015	-1.069
18	270	-.560	.242	-.081	-2.029
18	273	-.410	.174	-.042	-1.419
18	274	-.570	.301	-.053	-2.926
18	279	-.365	.165	.073	-1.419
18	282	-.841	.331	-.057	-2.378
18	285	-.286	.126	.097	-.929
18	337	-.194	.072	.047	-.593
18	339	-.195	.075	.043	-.571
18	354	-.269	.108	-.081	-1.214
18	370	-.276	.110	-.049	-1.449
18	371	-.255	.102	-.031	-1.122
18	372	-.206	.082	.017	-.756
18	373	-.204	.073	-.008	-.742
18	406	-.298	.116	.107	-.903
18	407	-.608	.213	-.178	-2.217
18	408	-.299	.119	.106	-.877
18	412	-.616	.213	-.172	-1.772
18	453	-.216	.061	-.045	-.525
18	458	-.352	.202	.084	-2.034
20	138	-.048	.110	.437	-.417
20	139	-.077	.107	.432	-.408
20	149	-.048	.071	.360	-.312
20	170	-.098	.079	.254	-.426
20	171	-.039	.070	.289	-.312
20	201	-.446	.124	-.148	-1.032
20	206	-.344	.145	.110	-1.094
20	225	-.581	.275	.005	-2.867
20	230	-.370	.150	.012	-1.208
20	270	-.548	.225	-.074	-1.988
20	273	-.460	.196	-.040	-1.923
20	274	-.545	.259	-.061	-2.168
20	279	-.387	.172	.045	-1.726
20	282	-.873	.367	.014	-2.975
20	285	-.317	.137	.115	-1.182
20	337	-.195	.075	.018	-.670
20	339	-.194	.076	.003	-.802
20	354	-.281	.121	-.074	-1.361
20	370	-.293	.124	-.083	-1.451
20	371	-.268	.113	-.073	-1.039

APPENDIX A -- PRESSURE DATA: CONFIGURATION B; 1221 BRICKELL BUILDING

WD	TAP	CPMEAN	CPRMS	CPMAX	CPMIN
20	372	-.204	.074	.015	-.785
20	373	-.200	.064	-.030	-.526
20	406	-.307	.115	.153	-.755
20	407	-.670	.240	-.248	-1.998
20	408	-.291	.114	.054	-.727
20	412	-.674	.224	-.187	-1.752
20	453	-.215	.051	-.055	-.455
20	458	-.330	.174	.057	-1.594
22	138	-.058	.110	.402	-.453
22	139	-.088	.107	.350	-.503
22	149	-.024	.083	.438	-.296
22	170	-.058	.088	.328	-.434
22	171	-.006	.081	.284	-.309
22	201	-.438	.115	-.161	-1.118
22	206	-.372	.150	.133	-1.095
22	225	-.571	.276	.015	-2.254
22	230	-.357	.142	-.011	-1.105
22	270	-.507	.194	-.090	-1.825
22	273	-.445	.185	-.045	-1.434
22	274	-.502	.217	-.062	-1.813
22	279	-.371	.159	-.002	-1.445
22	282	-.790	.340	.002	-2.589
22	285	-.317	.131	.041	-1.027
22	337	-.187	.071	.013	-.714
22	339	-.190	.073	.031	-.673
22	354	-.270	.099	-.097	-1.163
22	370	-.286	.103	-.096	-.981
22	371	-.260	.097	-.079	-.902
22	372	-.210	.080	.034	-.715
22	373	-.204	.069	.012	-.661
22	406	-.299	.106	.072	-.741
22	407	-.755	.250	-.238	-2.148
22	408	-.284	.115	.126	-.803
22	412	-.698	.224	-.231	-1.704
22	453	-.225	.056	-.067	-.580
22	458	-.319	.178	.087	-1.453
24	138	-.045	.105	.420	-.480
24	139	-.074	.100	.367	-.567
24	149	.025	.069	.505	-.224
24	170	-.020	.067	.431	-.292
24	171	.026	.062	.307	-.242
24	201	-.416	.129	-.060	-1.102
24	206	-.325	.133	.116	-1.080
24	225	-.543	.248	.038	-2.605
24	230	-.314	.121	.052	-1.081
24	270	-.469	.191	-.077	-2.137
24	273	-.395	.163	-.036	-1.983
24	274	-.482	.224	-.059	-2.335
24	279	-.332	.146	.064	-1.150
24	282	-.653	.280	-.060	-2.058

WD	TAP	CPMEAN	CPRMS	CPMAX	CPMIN
24	285	-.299	.118	.085	-1.116
24	337	-.184	.071	.057	-.616
24	339	-.187	.076	.100	-.669
24	354	-.225	.068	-.075	-.649
24	370	-.248	.070	-.087	-.874
24	371	-.219	.068	-.064	-.715
24	372	-.197	.079	.034	-.739
24	373	-.187	.067	.009	-.607
24	406	-.275	.096	.063	-.773
24	407	-.713	.282	-.146	-2.575
24	408	-.246	.093	.074	-.697
24	412	-.691	.245	-.161	-2.075
24	453	-.212	.043	-.099	-.379
24	458	-.317	.166	.028	-1.899
26	138	-.050	.104	.472	-.416
26	139	-.079	.098	.382	-.446
26	149	.030	.073	.402	-.211
26	170	-.015	.067	.263	-.240
26	171	.036	.065	.436	-.219
26	201	-.401	.123	-.098	-1.114
26	206	-.350	.139	.042	-1.115
26	225	-.543	.250	-.010	-3.048
26	230	-.340	.119	-.002	-1.121
26	270	-.450	.160	-.040	-1.515
26	273	-.429	.160	-.068	-1.402
26	274	-.465	.199	-.055	-1.799
26	279	-.356	.148	.096	-1.164
26	282	-.672	.294	-.045	-2.196
26	285	-.340	.129	.157	-.995
26	337	-.199	.078	.033	-.668
26	339	-.200	.084	.034	-.802
26	354	-.232	.063	-.090	-.530
26	370	-.262	.065	-.125	-.591
26	371	-.227	.063	-.085	-.495
26	372	-.206	.084	.053	-.968
26	373	-.195	.074	.069	-.916
26	406	-.285	.091	.096	-.733
26	407	-.714	.283	-.027	-2.237
26	408	-.247	.090	.098	-.785
26	412	-.700	.249	-.175	-1.860
26	453	-.225	.042	-.083	-.412
26	458	-.311	.162	.016	-1.393
28	138	-.053	.098	.470	-.385
28	139	-.080	.093	.391	-.415
28	149	.043	.073	.481	-.160
28	170	.004	.067	.298	-.225
28	171	.049	.064	.348	-.149
28	201	-.370	.111	-.112	-1.388
28	206	-.361	.144	.101	-1.185
28	225	-.529	.231	-.015	-2.382

WD	TAP	CPMEAN	CPRMS	CPMAX	CPMIN
28	230	-.339	.114	-.004	-1.023
28	270	-.453	.153	-.048	-1.587
28	273	-.433	.157	-.046	-1.387
28	274	-.471	.195	-.067	-2.287
28	279	-.347	.147	.043	-1.773
28	282	-.623	.295	.027	-2.691
28	285	-.352	.133	.032	-1.106
28	337	-.201	.082	.086	-.750
28	339	-.206	.088	.067	-.826
28	354	-.227	.056	-.018	-.559
28	370	-.266	.057	-.064	-.581
28	371	-.224	.056	-.007	-.520
28	372	-.204	.084	.046	-.833
28	373	-.194	.073	.017	-.844
28	406	-.288	.089	.003	-.771
28	407	-.682	.278	-.117	-2.129
28	408	-.241	.087	.122	-.780
28	412	-.665	.229	.131	-1.830
28	453	-.230	.043	-.111	-.450
28	458	-.297	.151	.000	-1.456
30	138	-.054	.097	.481	-.444
30	139	-.078	.090	.384	-.420
30	149	.039	.077	.454	-.231
30	170	.006	.072	.349	-.350
30	171	.066	.071	.526	-.172
30	201	-.367	.106	-.094	-1.280
30	206	-.383	.142	-.056	-1.148
30	225	-.541	.222	.033	-2.132
30	230	-.338	.109	.057	-.809
30	270	-.441	.155	-.121	-1.724
30	273	-.432	.147	-.047	-1.217
30	274	-.462	.196	-.116	-2.359
30	279	-.348	.138	-.037	-1.377
30	282	-.592	.293	-.015	-2.471
30	285	-.374	.138	.050	-1.212
30	337	-.223	.099	.053	-.846
30	339	-.215	.105	.100	-1.339
30	354	-.233	.066	-.072	-.856
30	370	-.280	.070	-.113	-1.082
30	371	-.233	.066	-.069	-.818
30	372	-.210	.092	.031	-1.296
30	373	-.200	.079	.024	-1.216
30	406	-.293	.082	.089	-.734
30	407	-.667	.254	-.079	-1.990
30	408	-.243	.079	.081	-.664
30	412	-.663	.237	-.030	-2.158
30	453	-.244	.041	-.106	-.429
30	458	-.310	.159	.023	-1.478
32	138	-.091	.085	.417	-.437
32	139	-.105	.083	.544	-.488

APPENDIX A -- PRESSURE DATA: CONFIGURATION B: 1221 BRICKELL BUILDING

WD	TAP	CPMEAN	CPRMS	CPMAX	CPMIN
32	149	.014	.079	.435	-.232
32	170	.012	.076	.439	-.212
32	171	.044	.066	.360	-.149
32	201	-.348	.099	-.102	-1.134
32	206	-.392	.164	.025	-1.549
32	225	-.470	.206	-.080	-2.127
32	230	-.331	.109	.036	-.849
32	270	-.413	.147	-.011	-1.364
32	273	-.432	.144	-.010	-1.444
32	274	-.425	.171	.013	-1.774
32	279	-.344	.132	-.068	-1.467
32	282	-.563	.270	-.045	-2.264
32	285	-.378	.130	-.045	-1.452
32	337	-.219	.092	.028	-.796
32	339	-.217	.095	.072	-1.122
32	354	-.238	.078	-.072	-.755
32	370	-.298	.081	-.130	-.834
32	371	-.239	.077	-.067	-.718
32	372	-.222	.101	.041	-1.567
32	373	-.212	.088	.019	-1.426
32	406	-.284	.069	-.042	-.602
32	407	-.569	.204	.003	-2.182
32	408	-.214	.060	.022	-.504
32	412	-.537	.181	.036	-1.559
32	453	-.246	.046	-.120	-.514
32	458	-.197	.110	.178	-.878
34	138	-.097	.084	.388	-.390
34	139	-.109	.080	.326	-.396
34	149	.018	.079	.499	-.227
34	170	.022	.075	.418	-.181
34	171	.054	.065	.450	-.153
34	201	-.329	.089	-.082	-1.044
34	206	-.401	.160	.040	-1.246
34	225	-.453	.185	-.022	-2.195
34	230	-.344	.106	-.049	-.902
34	270	-.418	.146	-.050	-1.640
34	273	-.451	.142	-.087	-1.157
34	274	-.433	.173	-.089	-1.792
34	279	-.352	.128	.031	-1.129
34	282	-.539	.244	.026	-1.979
34	285	-.403	.124	.003	-.960
34	337	-.233	.091	.025	-.852
34	339	-.232	.107	.064	-1.042
34	354	-.252	.085	-.047	-1.144
34	370	-.322	.089	-.109	-1.211
34	371	-.255	.081	-.047	-.910
34	372	-.222	.096	.105	-.798
34	373	-.213	.082	.031	-.671
34	406	-.294	.067	-.022	-.611
34	407	-.544	.183	.023	-1.419
34	408	-.222	.061	.034	-.576
34	412	-.515	.167	.100	-1.569
34	453	-.260	.047	-.152	-.468
34	458	-.194	.125	.132	-1.178
36	138	-.103	.082	.271	-.420
36	139	-.114	.078	.207	-.442
36	149	.023	.073	.533	-.221
36	170	.032	.070	.630	-.187
36	171	.054	.062	.367	-.129
36	201	-.319	.079	-.118	-1.093
36	206	-.412	.152	-.042	-1.271
36	225	-.447	.171	-.051	-1.884
36	230	-.352	.101	-.096	-.934
36	270	-.415	.127	-.081	-1.215
36	273	-.462	.136	-.161	-1.371
36	274	-.428	.151	-.074	-1.879
36	279	-.340	.122	-.018	-1.124
36	282	-.511	.240	-.010	-2.151
36	285	-.408	.124	.008	-1.202
36	337	-.244	.104	.025	-1.333
36	339	-.231	.104	.024	-1.507
36	354	-.248	.077	-.076	-.732
36	370	-.325	.081	-.147	-.841
36	371	-.253	.076	-.074	-.723
36	372	-.231	.097	.031	-1.251
36	373	-.224	.085	-.027	-1.249
36	406	-.300	.061	-.092	-.527
36	407	-.493	.168	.040	-1.467
36	408	-.219	.056	-.014	-.511
36	412	-.479	.161	.082	-1.485
36	453	-.270	.046	-.137	-.672
36	458	-.174	.103	.097	-.834
38	138	-.112	.076	.256	-.433
38	139	-.119	.074	.194	-.460
38	149	.016	.073	.414	-.175
38	170	.035	.068	.437	-.255
38	171	.064	.073	.653	-.138
38	201	-.328	.081	-.062	-.847
38	206	-.442	.153	-.050	-1.244
38	225	-.473	.182	-.060	-1.840
38	230	-.354	.101	-.059	-.903
38	270	-.418	.144	-.097	-1.633
38	273	-.463	.135	-.182	-1.500
38	274	-.437	.169	-.092	-1.953
38	279	-.363	.131	.055	-1.332
38	282	-.520	.241	-.023	-2.351
38	285	-.447	.130	-.030	-1.447
38	337	-.281	.117	.008	-1.073
38	339	-.258	.116	.012	-1.272
38	354	-.260	.073	-.087	-.847
38	370	-.348	.079	-.162	-1.005
38	371	-.268	.074	-.060	-.840
38	372	-.255	.114	.015	-1.651
38	373	-.246	.094	.012	-1.228
38	406	-.312	.060	-.053	-.624
38	407	-.470	.163	.098	-1.597
38	408	-.224	.053	-.028	-.447
38	412	-.456	.152	.081	-1.134
38	453	-.289	.050	-.122	-.528
38	458	-.161	.106	.161	-.830
40	138	-.120	.085	.353	-.510
40	139	-.130	.083	.282	-.476
40	149	.018	.082	.415	-.270
40	170	.040	.075	.409	-.219
40	171	.068	.074	.446	-.158
40	201	-.310	.068	-.102	-.860
40	206	-.453	.144	-.059	-1.603
40	225	-.460	.157	-.075	-2.022
40	230	-.364	.100	-.014	-.886
40	270	-.383	.112	-.129	-.925
40	273	-.481	.134	-.162	-1.264
40	274	-.406	.124	-.118	-1.167
40	279	-.367	.112	-.057	-.972
40	282	-.548	.264	-.043	-2.308
40	285	-.477	.127	-.100	-1.480
40	337	-.277	.106	.056	-1.404
40	339	-.275	.115	.075	-1.468
40	354	-.297	.105	-.102	-1.299
40	370	-.404	.115	-.208	-1.531
40	371	-.303	.102	-.098	-1.140
40	372	-.256	.099	.032	-.941
40	373	-.247	.083	.032	-.915
40	406	-.319	.058	-.121	-.571
40	407	-.445	.140	.104	-1.483
40	408	-.217	.049	-.019	-.476
40	412	-.429	.135	.193	-1.279
40	453	-.320	.058	-.172	-.607
40	458	-.177	.110	.147	-1.018
42	138	-.126	.085	.236	-.434
42	139	-.145	.082	.261	-.452
42	149	.079	.080	.490	-.141
42	170	.049	.079	.445	-.189
42	171	.077	.076	.422	-.204
42	201	-.319	.063	-.118	-.607
42	206	-.359	.122	-.061	-1.177
42	225	-.446	.140	-.094	-1.918
42	230	-.375	.095	-.137	-1.240
42	270	-.419	.122	-.125	-1.427
42	273	-.396	.120	-.129	-1.300
42	274	-.423	.137	-.107	-1.798

APPENDIX A -- PRESSURE DATA: CONFIGURATION B; 1221 BRICKELL BUILDING

WD	TAP	CPMEAN	CPRMS	CPMAX	CPMIN
42	279	-.358	.105	-.051	-1.022
42	282	-.533	.244	-.033	-1.891
42	285	-.380	.111	-.044	-1.008
42	337	-.293	.108	.059	-1.339
42	339	-.274	.102	.021	-.900
42	354	-.306	.091	-.088	-1.168
42	370	-.313	.095	-.107	-1.300
42	371	-.296	.090	-.072	-.921
42	372	-.285	.106	.006	-1.044
42	373	-.286	.087	-.025	-.724
42	406	-.234	.050	-.054	-.495
42	407	-.408	.132	.086	-1.119
42	408	-.215	.044	-.042	-.391
42	412	-.412	.128	.132	-1.143
42	453	-.234	.053	-.093	-.529
42	458	-.153	.104	.176	-.878
44	138	-.136	.085	.306	-.492
44	139	-.152	.082	.199	-.564
44	149	.077	.077	.385	-.217
44	170	.055	.074	.370	-.210
44	171	.075	.075	.423	-.150
44	201	-.318	.062	-.105	-.637
44	206	-.371	.120	-.079	-1.289
44	225	-.446	.146	-.001	-1.889
44	230	-.383	.091	-.133	-1.089
44	270	-.414	.116	-.153	-1.355
44	273	-.403	.115	-.161	-1.119
44	274	-.418	.125	-.119	-1.661
44	279	-.361	.100	-.018	-.912
44	282	-.523	.246	-.038	-2.057
44	285	-.397	.103	-.125	-1.037
44	337	-.298	.102	.071	-1.104
44	339	-.297	.110	.093	-1.108
44	354	-.318	.081	-.118	-.944
44	370	-.331	.081	-.130	-.962
44	371	-.310	.080	-.094	-.895
44	372	-.301	.116	.028	-1.245
44	373	-.295	.091	.039	-.934
44	406	-.237	.046	-.093	-.450
44	407	-.372	.125	.147	-1.902
44	408	-.217	.043	-.039	-.454
44	412	-.384	.129	.152	-1.049
44	453	-.254	.055	-.093	-.462
44	458	-.142	.110	.202	-1.307
46	138	-.144	.080	.184	-.426
46	139	-.157	.077	.202	-.457
46	149	.072	.074	.445	-.158
46	170	.054	.070	.423	-.299
46	171	.068	.067	.374	-.110
46	201	-.306	.059	-.121	-.652

WD	TAP	CPMEAN	CPRMS	CPMAX	CPMIN
46	206	-.363	.105	-.105	-.950
46	225	-.437	.138	.081	-2.309
46	230	-.364	.081	-.110	-.855
46	270	-.387	.096	-.124	-.911
46	273	-.386	.100	-.158	-.958
46	274	-.396	.108	-.108	-1.226
46	279	-.352	.099	-.086	-.864
46	282	-.482	.223	-.047	-1.955
46	285	-.394	.104	-.100	-1.052
46	337	-.302	.095	-.044	-.893
46	339	-.313	.114	.044	-1.531
46	354	-.318	.078	-.087	-.696
46	370	-.337	.079	-.112	-.750
46	371	-.311	.078	-.088	-.724
46	372	-.300	.102	.006	-1.007
46	373	-.298	.086	-.030	-.921
46	406	-.241	.044	-.035	-.459
46	407	-.348	.123	.202	-1.233
46	408	-.215	.040	-.074	-.390
46	412	-.356	.122	.241	-.985
46	453	-.258	.051	-.110	-.490
46	458	-.104	.095	.192	-.585
48	138	-.163	.084	.263	-.491
48	139	-.175	.079	.192	-.482
48	149	.073	.078	.396	-.165
48	170	.060	.073	.345	-.213
48	171	.071	.069	.369	-.212
48	201	-.311	.058	-.148	-.604
48	206	-.375	.102	-.129	-1.011
48	225	-.450	.142	-.127	-1.530
48	230	-.380	.083	-.135	-.875
48	270	-.410	.107	-.153	-1.120
48	273	-.404	.104	-.114	-1.138
48	274	-.423	.111	-.127	-1.424
48	279	-.351	.097	-.063	-1.237
48	282	-.455	.189	.022	-1.594
48	285	-.408	.102	-.153	-.908
48	337	-.326	.102	-.032	-1.107
48	339	-.330	.105	.013	-1.012
48	354	-.336	.079	-.155	-.828
48	370	-.364	.081	-.178	-.910
48	371	-.332	.079	-.140	-.826
48	372	-.315	.100	.001	-1.064
48	373	-.309	.078	-.008	-.753
48	406	-.248	.041	-.102	-.440
48	407	-.332	.119	.154	-1.034
48	408	-.219	.038	-.095	-.366
48	412	-.336	.129	.197	-.931
48	453	-.270	.050	-.136	-.565
48	458	-.102	.097	.129	-.846

WD	TAP	CPMEAN	CPRMS	CPMAX	CPMIN
92	138	-.380	.102	-.049	-.880
92	139	-.367	.094	-.030	-.850
92	149	-.758	.271	.072	-2.059
92	170	-.700	.261	-.067	-1.891
92	171	-.658	.275	-.006	-2.084
92	201	-.334	.062	-.141	-.679
92	206	-.407	.066	-.213	-.721
92	225	-.365	.079	-.072	-.831
92	230	-.428	.081	-.185	-.761
92	270	-.364	.085	-.113	-.744
92	273	-.448	.077	-.158	-.880
92	274	-.372	.082	-.116	-.816
92	279	-.403	.078	-.137	-.730
92	282	-.391	.104	.050	-1.208
92	285	-.474	.076	-.183	-.829
92	337	-.435	.095	-.045	-.813
92	339	-.435	.101	-.115	-1.040
92	354	-.602	.142	-.253	-1.473
92	370	-.677	.160	-.309	-1.811
92	371	-.608	.141	-.258	-1.536
92	372	-.418	.100	-.086	-.996
92	373	-.426	.100	.002	-.802
92	406	-.241	.049	-.052	-.425
92	407	-.071	.059	.158	-.275
92	408	-.170	.047	.033	-.328
92	412	-.026	.064	.248	-.289
92	453	-.262	.066	-.057	-.572
92	458	-.084	.065	.214	-.374
94	138	-.381	.105	-.055	-.992
94	139	-.364	.098	-.099	-.795
94	149	-.721	.284	-.029	-2.120
94	170	-.653	.264	-.150	-1.967
94	171	-.708	.307	.036	-2.423
94	201	-.349	.064	-.144	-.649
94	206	-.429	.070	-.224	-.986
94	225	-.387	.094	-.088	-.790
94	230	-.439	.088	-.094	-.850
94	270	-.372	.097	-.038	-.785
94	273	-.464	.086	-.221	-.958
94	274	-.379	.092	-.114	-.979
94	279	-.407	.083	-.123	-.764
94	282	-.391	.109	-.013	-.939
94	285	-.481	.080	-.191	-.851
94	337	-.427	.099	-.106	-.864
94	339	-.450	.105	-.101	-1.046
94	354	-.632	.159	-.286	-1.684
94	370	-.716	.177	-.352	-2.095
94	371	-.639	.156	-.309	-1.783
94	372	-.431	.106	-.096	-.867
94	373	-.439	.107	.083	-.831

APPENDIX A -- PRESSURE DATA: CONFIGURATION B: 1221 BRICKELL BUILDING

WD	TAP	CPMEAN	CPRMS	CPMAX	CPMIN
94	406	-.242	.051	-.017	-.449
94	407	-.077	.056	.127	-.273
94	408	-.166	.049	.006	-.368
94	412	-.034	.064	.164	-.250
94	453	-.264	.063	-.024	-.513
94	458	-.090	.065	.208	-.344
96	138	-.393	.114	.019	-.971
96	139	-.370	.105	-.036	-1.113
96	149	-.804	.291	-.058	-2.292
96	170	-.725	.276	-.110	-1.944
96	171	-.761	.325	-.058	-2.856
96	201	-.346	.066	-.153	-.691
96	206	-.433	.071	-.224	-.900
96	225	-.387	.103	-.089	-.946
96	230	-.433	.096	-.134	-.924
96	270	-.373	.109	-.072	-.938
96	273	-.471	.094	-.133	-.911
96	274	-.378	.102	-.048	-.899
96	279	-.407	.089	-.129	-.823
96	282	-.397	.127	-.026	-1.067
96	285	-.482	.090	-.170	-1.118
96	337	-.420	.104	-.040	-.925
96	339	-.418	.111	.095	-.996
96	354	-.674	.191	-.252	-1.776
96	370	-.780	.229	-.351	-2.328
96	371	-.683	.192	-.265	-1.901
96	372	-.405	.112	-.053	-.875
96	373	-.414	.118	.022	-.993
96	406	-.240	.052	-.056	-.473
96	407	-.100	.054	.135	-.309
96	408	-.160	.052	.083	-.346
96	412	-.055	.058	.160	-.262
96	453	-.264	.066	-.045	-.716
96	458	-.120	.065	.130	-.427
98	138	-.385	.114	-.055	-.900
98	139	-.363	.105	-.046	-.919
98	149	-.910	.274	-.048	-2.528
98	170	-.827	.264	-.244	-2.302
98	171	-.874	.323	-.154	-2.860
98	201	-.345	.070	-.130	-.693
98	206	-.438	.076	-.230	-.828
98	225	-.387	.110	-.058	-.866
98	230	-.445	.102	-.070	-.905
98	270	-.392	.120	-.006	-.904
98	273	-.486	.100	-.134	-.994
98	274	-.397	.114	-.043	-.928
98	279	-.427	.102	-.102	-.836
98	282	-.420	.134	-.021	-1.122
98	285	-.501	.098	-.209	-.958
98	337	-.432	.119	-.030	-.920

WD	TAP	CPMEAN	CPRMS	CPMAX	CPMIN
98	339	-.419	.119	-.016	-1.399
98	354	-.680	.200	-.201	-1.967
98	370	-.792	.236	-.274	-2.583
98	371	-.690	.198	-.244	-1.990
98	372	-.393	.108	-.033	-.826
98	373	-.406	.122	.010	-.927
98	406	-.237	.054	-.056	-.467
98	407	-.113	.054	.140	-.303
98	408	-.153	.054	.125	-.359
98	412	-.065	.058	.162	-.302
98	453	-.261	.062	-.051	-.576
98	458	-.124	.059	.078	-.406
100	138	-.382	.118	-.028	-.944
100	139	-.354	.109	-.006	-.832
100	149	-.955	.306	-.187	-2.812
100	170	-.860	.288	-.260	-2.239
100	171	-.901	.325	-.058	-2.882
100	201	-.353	.075	-.110	-.761
100	206	-.450	.083	-.192	-.880
100	225	-.400	.116	-.082	-.843
100	230	-.441	.109	-.098	-.889
100	270	-.396	.127	-.039	-.979
100	273	-.489	.113	-.161	-1.050
100	274	-.401	.120	-.035	-.923
100	279	-.418	.105	-.063	-.976
100	282	-.404	.128	-.031	-1.223
100	285	-.488	.107	-.114	-1.282
100	337	-.411	.119	.043	-.905
100	339	-.401	.120	-.003	-.917
100	354	-.700	.216	-.293	-2.339
100	370	-.826	.260	-.359	-2.707
100	371	-.713	.215	-.294	-2.120
100	372	-.387	.108	-.063	-.897
100	373	-.394	.124	.010	-1.005
100	406	-.231	.054	.022	-.451
100	407	-.126	.053	.087	-.343
100	408	-.145	.057	.101	-.386
100	412	-.084	.059	.172	-.339
100	453	-.264	.062	-.077	-.550
100	458	-.131	.058	.076	-.421
102	138	-.397	.127	.031	-1.137
102	139	-.367	.119	.038	-.964
102	149	-.956	.299	-.333	-2.835
102	170	-.855	.280	-.278	-2.431
102	171	-.873	.326	-.194	-2.811
102	201	-.348	.078	-.054	-.799
102	206	-.441	.082	-.223	-.821
102	225	-.395	.117	-.084	-.916
102	230	-.428	.110	-.088	-1.125
102	270	-.397	.128	-.061	-.980

WD	TAP	CPMEAN	CPRMS	CPMAX	CPMIN
102	273	-.482	.117	-.126	-1.175
102	274	-.400	.119	-.087	-.865
102	279	-.417	.113	-.105	-.919
102	282	-.401	.122	-.066	-1.089
102	285	-.483	.114	-.153	-1.243
102	337	-.399	.117	.014	-1.376
102	339	-.394	.119	-.001	-1.246
102	354	-.744	.226	-.300	-2.167
102	370	-.877	.271	-.241	-2.465
102	371	-.756	.229	-.317	-1.991
102	372	-.364	.114	-.013	-.825
102	373	-.367	.129	.045	-.934
102	406	-.218	.056	.004	-.434
102	407	-.134	.054	.050	-.348
102	408	-.141	.057	.066	-.372
102	412	-.099	.058	.131	-.383
102	453	-.262	.065	-.051	-.573
102	458	-.141	.060	.071	-.392
104	138	-.379	.124	-.038	-.865
104	139	-.350	.115	-.036	-.842
104	149	-.929	.289	-.314	-2.295
104	170	-.830	.280	-.307	-2.470
104	171	-.908	.346	-.162	-2.664
104	201	-.365	.082	-.120	-.763
104	206	-.458	.087	-.203	-.938
104	225	-.433	.118	-.038	-.932
104	230	-.417	.119	-.051	-.875
104	270	-.394	.123	-.061	-.959
104	273	-.482	.128	-.117	-.993
104	274	-.400	.117	-.038	-.958
104	279	-.420	.125	-.048	-1.072
104	282	-.404	.122	-.046	-.990
104	285	-.497	.134	-.090	-1.862
104	337	-.397	.128	.001	-.976
104	339	-.397	.129	-.033	-1.119
104	354	-.769	.249	-.270	-2.159
104	370	-.911	.298	-.295	-2.899
104	371	-.782	.252	-.282	-2.289
104	372	-.352	.105	-.028	-.925
104	373	-.349	.121	.043	-.875
104	406	-.212	.058	.009	-.442
104	407	-.146	.052	.050	-.352
104	408	-.123	.057	.163	-.306
104	412	-.108	.055	.071	-.316
104	453	-.254	.063	-.035	-.531
104	458	-.147	.060	.094	-.512
106	138	-.389	.123	-.011	-.925
106	139	-.357	.114	-.041	-.805
106	149	-.889	.258	-.355	-2.222
106	170	-.783	.242	-.290	-2.011

APPENDIX A -- PRESSURE DATA: CONFIGURATION B: 1221 BRICKELL BUILDING

WD	TAP	CPMEAN	CPRMS	CPMAX	CPMIN
106	171	-.851	.301	-.323	-2.663
106	201	-.356	.081	-.095	-.866
106	206	-.446	.083	-.162	-.778
106	225	-.419	.115	-.093	-.897
106	230	-.409	.120	-.076	-.902
106	270	-.391	.118	-.044	-1.093
106	273	-.483	.133	-.139	-1.084
106	274	-.399	.113	-.069	-1.053
106	279	-.424	.129	-.088	-.900
106	282	-.410	.119	-.082	-1.045
106	285	-.499	.132	-.091	-1.105
106	337	-.399	.128	.014	-.949
106	339	-.369	.118	-.011	-.872
106	354	-.762	.255	-.205	-1.989
106	370	-.913	.312	-.263	-2.510
106	371	-.775	.259	-.212	-1.944
106	372	-.353	.114	-.021	-.917
106	373	-.346	.133	.097	-.879
106	406	-.201	.059	.004	-.392
106	407	-.156	.053	.038	-.369
106	408	-.114	.058	.084	-.318
106	412	-.117	.057	.125	-.322
106	453	-.248	.063	-.046	-.640
106	458	-.154	.059	.077	-.413
108	138	-.400	.119	.031	-.909
108	139	-.369	.112	.055	-.893
108	149	-.867	.258	-.401	-2.798
108	170	-.761	.237	-.327	-2.229
108	171	-.773	.254	-.294	-2.702
108	201	-.348	.077	-.140	-.876
108	206	-.433	.078	-.175	-1.016
108	225	-.420	.107	-.077	-.881
108	230	-.402	.122	-.041	-.904
108	270	-.393	.113	-.066	-.893
108	273	-.479	.131	-.085	-1.189
108	274	-.403	.109	-.084	-.933
108	279	-.406	.125	-.041	-1.048
108	282	-.395	.108	-.066	-1.119
108	285	-.487	.138	-.072	-1.943
108	337	-.380	.120	.014	-1.155
108	339	-.380	.119	-.031	-1.043
108	354	-.787	.256	-.241	-2.058
108	370	-.948	.318	-.311	-2.687
108	371	-.802	.261	-.263	-2.053
108	372	-.327	.103	.081	-.812
108	373	-.313	.119	.060	-.830
108	406	-.187	.057	.036	-.466
108	407	-.161	.051	.014	-.356
108	408	-.092	.061	.113	-.328
108	412	-.122	.054	.078	-.340

WD	TAP	CPMEAN	CPRMS	CPMAX	CPMIN
108	453	-.242	.067	-.094	-.529
108	458	-.159	.060	.030	-.410
110	138	-.409	.119	-.043	-.906
110	139	-.375	.111	.076	-.806
110	149	-.840	.257	-.270	-2.726
110	170	-.733	.240	-.265	-2.498
110	171	-.718	.238	-.237	-2.734
110	201	-.344	.076	-.155	-.786
110	206	-.428	.077	-.159	-.765
110	225	-.419	.104	-.100	-.933
110	230	-.394	.119	-.026	-.951
110	270	-.388	.102	-.071	-.890
110	273	-.473	.128	-.096	-1.131
110	274	-.402	.099	-.035	-.853
110	279	-.387	.123	.004	-1.090
110	282	-.386	.096	-.082	-.844
110	285	-.480	.143	.020	-1.649
110	337	-.364	.115	-.030	-1.013
110	339	-.368	.121	.061	-1.060
110	354	-.769	.270	-.089	-1.949
110	370	-.934	.325	-.183	-2.652
110	371	-.786	.273	-.177	-2.252
110	372	-.325	.094	-.041	-.735
110	373	-.305	.110	.027	-.903
110	406	-.173	.060	.075	-.378
110	407	-.167	.051	-.009	-.369
110	408	-.081	.060	.148	-.281
110	412	-.132	.052	.040	-.348
110	453	-.225	.065	-.022	-.515
110	458	-.162	.059	.027	-.514
112	138	-.399	.109	-.013	-.898
112	139	-.369	.105	-.076	-.833
112	149	-.755	.212	-.343	-2.515
112	170	-.649	.195	-.281	-2.317
112	171	-.663	.204	-.281	-2.067
112	201	-.335	.073	-.099	-.656
112	206	-.419	.077	-.130	-1.081
112	225	-.414	.101	-.105	-.880
112	230	-.371	.111	-.058	-.940
112	270	-.371	.094	-.079	-.902
112	273	-.453	.122	-.062	-.994
112	274	-.385	.093	-.069	-.834
112	279	-.368	.110	-.031	-.769
112	282	-.379	.087	-.109	-.818
112	285	-.466	.133	-.025	-1.170
112	337	-.355	.111	-.064	-.885
112	339	-.363	.112	-.058	-.960
112	354	-.741	.260	-.162	-2.248
112	370	-.903	.317	-.264	-3.084
112	371	-.758	.265	-.182	-2.480

WD	TAP	CPMEAN	CPRMS	CPMAX	CPMIN
112	372	-.317	.092	-.041	-.754
112	373	-.289	.101	-.031	-.780
112	406	-.158	.064	.125	-.401
112	407	-.174	.050	.030	-.345
112	408	-.069	.065	.163	-.323
112	412	-.139	.053	.040	-.337
112	453	-.214	.071	.036	-.565
112	458	-.161	.059	.048	-.405
114	138	-.403	.105	.002	-1.062
114	139	-.375	.102	-.013	-.977
114	149	-.723	.196	-.310	-2.079
114	170	-.620	.180	-.237	-1.787
114	171	-.639	.211	-.240	-3.026
114	201	-.334	.072	-.145	-.726
114	206	-.421	.072	-.199	-.810
114	225	-.416	.094	-.118	-.872
114	230	-.352	.097	-.021	-.945
114	270	-.358	.092	-.079	-.847
114	273	-.433	.108	-.041	-1.016
114	274	-.376	.093	-.092	-.792
114	279	-.366	.102	-.031	-.988
114	282	-.379	.080	-.132	-.746
114	285	-.465	.123	-.078	-1.119
114	337	-.351	.105	-.014	-.857
114	339	-.351	.109	-.026	-.841
114	354	-.671	.259	-.006	-1.836
114	370	-.826	.317	-.062	-2.462
114	371	-.691	.265	-.061	-1.841
114	372	-.306	.081	-.056	-.680
114	373	-.271	.085	-.041	-.708
114	406	-.147	.063	.097	-.345
114	407	-.180	.052	-.007	-.398
114	408	-.051	.063	.233	-.312
114	412	-.142	.050	.076	-.353
114	453	-.202	.070	.015	-.543
114	458	-.160	.060	.061	-.429
116	138	-.426	.105	-.061	-1.439
116	139	-.400	.103	-.064	-1.276
116	149	-.675	.169	-.328	-1.949
116	170	-.573	.156	-.267	-1.668
116	171	-.567	.159	-.253	-1.858
116	201	-.324	.069	-.089	-.710
116	206	-.410	.069	-.187	-.718
116	225	-.407	.090	-.119	-.841
116	230	-.357	.093	-.011	-.766
116	270	-.362	.084	-.069	-.875
116	273	-.439	.102	-.102	-.882
116	274	-.382	.085	-.111	-.813
116	279	-.360	.098	-.063	-.814
116	282	-.376	.082	-.110	-.877

APPENDIX A -- PRESSURE DATA: CONFIGURATION B: 1221 BRICKELL BUILDING

WD	TAP	CPMEAN	CPRMS	CPMAX	CPMIN
116	285	-.460	.122	-.086	-1.384
116	337	-.350	.105	.019	-1.021
116	339	-.361	.104	-.071	-.894
116	354	-.671	.259	.025	-1.935
116	370	-.833	.320	.025	-2.495
116	371	-.695	.265	-.100	-2.079
116	372	-.306	.077	-.046	-.627
116	373	-.267	.078	-.041	-.659
116	406	-.133	.066	.094	-.397
116	407	-.184	.048	.053	-.384
116	408	-.038	.065	.231	-.305
116	412	-.144	.050	.017	-.341
116	453	-.181	.068	.054	-.479
116	458	-.160	.056	.014	-.389
118	138	-.426	.101	-.118	-1.161
118	139	-.402	.098	-.089	-1.109
118	149	-.614	.147	-.266	-1.375
118	170	-.517	.136	-.191	-1.251
118	171	-.524	.142	-.245	-1.323
118	201	-.321	.065	-.099	-.691
118	206	-.406	.065	-.179	-.698
118	225	-.403	.085	-.082	-.752
118	230	-.353	.082	-.098	-.880
118	270	-.350	.076	-.112	-.873
118	273	-.427	.087	-.120	-.766
118	274	-.370	.079	-.098	-.845
118	279	-.345	.081	-.096	-.790
118	282	-.367	.076	-.094	-.792
118	285	-.441	.102	-.110	-1.187
118	337	-.336	.088	-.103	-.832
118	339	-.345	.091	-.073	-1.082
118	354	-.557	.257	.030	-1.721
118	370	-.695	.309	-.017	-2.231
118	371	-.583	.262	-.020	-2.235
118	372	-.314	.073	-.096	-.823
118	373	-.268	.070	-.059	-.706
118	406	-.118	.063	.121	-.398
118	407	-.188	.047	-.035	-.401
118	408	-.024	.066	.198	-.247
118	412	-.148	.049	.073	-.356
118	453	-.152	.066	.113	-.457
118	458	-.160	.053	.069	-.383
172	138	-.297	.106	.125	-1.297
172	139	-.286	.103	.035	-1.045
172	149	-.386	.096	-.105	-1.013
172	170	-.343	.091	-.065	-.921
172	171	-.349	.091	-.122	-.902
172	201	-.336	.125	-.013	-.962
172	206	-.359	.068	-.170	-.998
172	225	-.373	.092	-.093	-1.040

WD	TAP	CPMEAN	CPRMS	CPMAX	CPMIN
172	230	-.486	.159	-.076	-1.940
172	270	-.390	.120	-.083	-.972
172	273	-.451	.113	-.192	-1.428
172	274	-.367	.107	-.116	-1.042
172	279	-.463	.132	-.124	-1.797
172	282	-.391	.116	.037	-1.165
172	285	-.580	.278	-.095	-2.393
172	337	-.132	.074	.135	-.440
172	339	-.164	.071	.086	-.459
172	354	.108	.082	.493	-.108
172	370	.060	.081	.463	-.182
172	371	.019	.073	.304	-.245
172	372	-.119	.070	.149	-.372
172	373	.014	.085	.398	-.206
172	406	-.590	.164	-.025	-1.293
172	407	-.246	.068	.003	-.531
172	408	-.527	.142	.004	-1.297
172	412	-.226	.060	-.038	-.486
172	453	-.446	.175	-.120	-1.473
172	458	-.276	.058	-.106	-.508
174	138	-.277	.101	.067	-.917
174	139	-.265	.101	.070	-.868
174	149	-.382	.099	-.120	-1.111
174	170	-.330	.093	-.073	-.883
174	171	-.354	.100	-.129	-1.294
174	201	-.337	.130	.017	-1.232
174	206	-.372	.068	-.178	-.772
174	225	-.379	.095	-.090	-1.004
174	230	-.504	.166	-.153	-1.649
174	270	-.394	.122	-.107	-1.292
174	273	-.471	.111	-.193	-1.116
174	274	-.368	.109	-.093	-1.194
174	279	-.446	.127	-.146	-1.734
174	282	-.364	.120	-.013	-1.048
174	285	-.592	.279	-.075	-2.325
174	337	-.118	.074	.225	-.502
174	339	-.161	.073	.137	-.407
174	354	.116	.080	.489	-.152
174	370	.063	.080	.437	-.200
174	371	.015	.072	.326	-.237
174	372	-.108	.071	.226	-.426
174	373	.026	.086	.434	-.217
174	406	-.630	.171	-.082	-1.412
174	407	-.249	.070	.028	-.664
174	408	-.550	.148	-.042	-1.536
174	412	-.228	.063	-.010	-.541
174	453	-.446	.161	-.102	-1.465
174	458	-.275	.058	-.100	-.520
176	138	-.249	.091	.033	-.889
176	139	-.237	.090	.062	-.850

WD	TAP	CPMEAN	CPRMS	CPMAX	CPMIN
176	149	-.383	.109	-.133	-1.250
176	170	-.320	.101	-.075	-1.276
176	171	-.337	.104	-.054	-1.075
176	201	-.323	.125	-.020	-1.084
176	206	-.377	.067	-.171	-.694
176	225	-.369	.102	-.083	-.990
176	230	-.512	.170	-.134	-1.795
176	270	-.416	.133	-.110	-1.179
176	273	-.476	.110	-.199	-1.409
176	274	-.390	.122	-.055	-1.377
176	279	-.451	.143	-.057	-1.590
176	282	-.371	.129	.050	-1.204
176	285	-.683	.301	-.166	-2.232
176	337	-.119	.075	.258	-.520
176	339	-.157	.074	.197	-.506
176	354	.105	.083	.573	-.187
176	370	.044	.083	.503	-.224
176	371	.006	.072	.418	-.285
176	372	-.113	.072	.224	-.456
176	373	.024	.084	.421	-.259
176	406	-.690	.192	-.217	-1.942
176	407	-.245	.073	.036	-.631
176	408	-.622	.165	-.153	-1.372
176	412	-.235	.070	.040	-.538
176	453	-.518	.205	-.123	-1.965
176	458	-.270	.059	-.045	-.581
178	138	-.201	.084	.023	-.869
178	139	-.187	.085	.042	-.841
178	149	-.418	.132	-.119	-1.238
178	170	-.328	.112	-.080	-1.105
178	171	-.335	.122	.064	-1.209
178	201	-.317	.135	.022	-1.125
178	206	-.394	.071	-.187	-.901
178	225	-.362	.109	.061	-1.002
178	230	-.477	.175	-.032	-1.919
178	270	-.390	.136	-.000	-1.145
178	273	-.479	.112	-.198	-1.439
178	274	-.364	.129	-.009	-1.155
178	279	-.413	.120	-.082	-1.317
178	282	-.330	.130	.076	-.972
178	285	-.798	.333	-.132	-2.345
178	337	-.107	.079	.264	-.396
178	339	-.137	.079	.272	-.502
178	354	.091	.078	.464	-.146
178	370	.016	.081	.391	-.220
178	371	-.003	.072	.311	-.280
178	372	-.093	.080	.304	-.394
178	373	.041	.091	.488	-.316
178	406	-.721	.186	-.220	-1.947
178	407	-.233	.071	.036	-.571

APPENDIX A -- PRESSURE DATA: CONFIGURATION B: 1221 BRICKELL BUILDING

WD	TAP	CPMEAN	CPRMS	CPMAX	CPMIN
178	408	-.599	.167	-.106	-1.557
178	412	-.212	.070	.044	-.545
178	453	-.459	.163	-.124	-1.282
178	458	-.240	.055	-.080	-.473
180	138	-.187	.075	.016	-.570
180	139	-.172	.074	.032	-.555
180	149	-.462	.175	.039	-1.428
180	170	-.355	.146	-.025	-1.159
180	171	-.381	.165	.045	-1.421
180	201	-.320	.139	.077	-1.062
180	206	-.415	.077	-.208	-.714
180	225	-.361	.124	-.027	-1.144
180	230	-.484	.184	-.035	-2.381
180	270	-.398	.144	.007	-1.139
180	273	-.506	.119	-.214	-1.466
180	274	-.368	.140	.008	-1.311
180	279	-.431	.136	-.093	-1.983
180	282	-.311	.133	.037	-.980
180	285	-.874	.331	-.152	-2.799
180	337	-.094	.088	.388	-.438
180	339	-.127	.091	.222	-.486
180	354	.053	.079	.462	-.217
180	370	-.029	.081	.369	-.311
180	371	-.026	.072	.322	-.407
180	372	-.093	.086	.389	-.427
180	373	.039	.092	.438	-.251
180	406	-.762	.212	-.262	-1.809
180	407	-.236	.076	.018	-.574
180	408	-.665	.187	-.095	-1.564
180	412	-.220	.076	.047	-.575
180	453	-.458	.180	-.092	-1.711
180	458	-.224	.065	.028	-.496
182	138	-.181	.063	.119	-.492
182	139	-.163	.062	.087	-.478
182	149	-.516	.188	-.034	-1.813
182	170	-.385	.148	.008	-1.237
182	171	-.400	.176	.011	-1.916
182	201	-.322	.153	.105	-1.159
182	206	-.452	.087	-.209	-.984
182	225	-.347	.127	.036	-.928
182	230	-.519	.228	-.047	-2.048
182	270	-.394	.158	-.013	-1.539
182	273	-.552	.150	-.159	-1.541
182	274	-.362	.151	.059	-1.267
182	279	-.443	.155	-.123	-1.941
182	282	-.278	.121	.050	-.913
182	285	-.887	.324	-.167	-2.264
182	337	-.082	.096	.416	-.410
182	339	-.122	.099	.402	-.753
182	354	.037	.070	.355	-.185

WD	TAP	CPMEAN	CPRMS	CPMAX	CPMIN
182	370	-.054	.072	.260	-.298
182	371	-.038	.067	.253	-.280
182	372	-.074	.102	.512	-.380
182	373	.055	.100	.650	-.225
182	406	-.813	.218	-.204	-2.130
182	407	-.237	.083	.075	-.734
182	408	-.692	.192	-.235	-1.613
182	412	-.218	.076	.017	-.551
182	453	-.423	.153	-.109	-1.641
182	458	-.203	.058	.059	-.459
184	138	-.165	.055	.007	-.415
184	139	-.166	.055	.016	-.414
184	149	-.379	.163	.070	-1.313
184	170	-.350	.144	-.001	-1.162
184	171	-.361	.144	-.012	-1.268
184	201	-.331	.154	.108	-1.151
184	206	-.389	.098	-.143	-1.005
184	225	-.315	.120	.002	-.961
184	230	-.520	.223	-.055	-2.050
184	270	-.393	.145	-.034	-1.171
184	273	-.476	.148	-.111	-1.647
184	274	-.334	.134	.044	-1.230
184	279	-.466	.183	-.111	-2.410
184	282	-.272	.108	.051	-.906
184	285	-.752	.287	.039	-2.008
184	337	-.053	.110	.462	-.443
184	339	-.069	.118	.545	-.521
184	354	-.009	.066	.398	-.192
184	370	-.020	.062	.405	-.225
184	371	-.067	.065	.331	-.358
184	372	-.034	.118	.485	-.523
184	373	.076	.118	.661	-.272
184	406	-.699	.204	-.208	-2.022
184	407	-.229	.081	.059	-.592
184	408	-.701	.203	-.151	-1.702
184	412	-.231	.082	.056	-.584
184	453	-.337	.142	-.075	-1.213
184	458	-.194	.055	.029	-.421
186	138	-.158	.051	.022	-.569
186	139	-.156	.052	-.002	-.650
186	149	-.346	.138	-.002	-1.309
186	170	-.314	.119	-.006	-1.081
186	171	-.335	.126	-.022	-1.230
186	201	-.325	.154	.187	-1.299
186	206	-.436	.118	-.164	-1.022
186	225	-.293	.116	.065	-1.043
186	230	-.598	.300	-.046	-2.681
186	270	-.369	.143	-.042	-1.357
186	273	-.536	.195	-.147	-1.824
186	274	-.312	.123	-.036	-1.073

WD	TAP	CPMEAN	CPRMS	CPMAX	CPMIN
186	279	-.526	.243	-.066	-2.703
186	282	-.243	.096	.036	-.852
186	285	-.736	.268	-.100	-2.334
186	337	-.026	.118	.433	-.450
186	339	-.055	.121	.428	-.504
186	354	-.012	.060	.300	-.203
186	370	-.029	.057	.270	-.248
186	371	-.075	.062	.194	-.323
186	372	-.006	.121	.445	-.373
186	373	.109	.122	.677	-.296
186	406	-.750	.213	-.061	-2.236
186	407	-.238	.088	.070	-.655
186	408	-.717	.210	-.143	-1.601
186	412	-.233	.086	.036	-.884
186	453	-.370	.150	-.083	-1.403
186	458	-.195	.051	-.034	-.419
188	138	-.187	.053	-.005	-.535
188	139	-.183	.054	-.032	-.546
188	149	-.410	.169	-.047	-1.510
188	170	-.368	.149	-.064	-1.343
188	171	-.366	.146	-.027	-1.354
188	201	-.337	.147	.116	-1.134
188	206	-.489	.129	-.136	-1.130
188	225	-.316	.126	-.026	-1.021
188	230	-.597	.289	-.097	-2.897
188	270	-.396	.154	-.014	-1.355
188	273	-.552	.202	-.148	-2.201
188	274	-.343	.138	.002	-1.168
188	279	-.569	.243	-.049	-2.384
188	282	-.268	.107	.111	-1.006
188	285	-.779	.286	-.027	-2.305
188	337	-.048	.124	.473	-.389
188	339	-.079	.131	.419	-.613
188	354	.006	.086	.503	-.258
188	370	-.018	.083	.452	-.264
188	371	-.069	.084	.372	-.399
188	372	-.048	.123	.453	-.453
188	373	.068	.121	.581	-.310
188	406	-.725	.217	-.202	-2.076
188	407	-.278	.103	.032	-.792
188	408	-.688	.197	-.194	-1.618
188	412	-.273	.103	.099	-1.044
188	453	-.446	.179	-.081	-2.219
188	458	-.222	.056	-.026	-.693
190	138	-.183	.051	-.007	-.465
190	139	-.178	.052	.003	-.509
190	149	-.392	.156	-.055	-1.477
190	170	-.347	.137	-.062	-1.151
190	171	-.350	.135	-.061	-1.556
190	201	-.313	.141	.119	-.990

APPENDIX A -- PRESSURE DATA: CONFIGURATION B: 1221 BRICKELL BUILDING

WD	TAP	CPMEAN	CPRMS	CPMAX	CPMIN
190	206	-.534	.150	-.172	-1.333
190	225	-.294	.119	.027	-1.047
190	230	-.668	.341	-.063	-3.375
190	270	-.370	.141	.061	-1.169
190	273	-.624	.241	-.147	-2.371
190	274	-.315	.122	.045	-1.087
190	279	-.622	.275	-.078	-2.645
190	282	-.263	.101	.013	-.751
190	285	-.805	.285	-.154	-2.324
190	337	-.026	.129	.519	-.616
190	339	-.061	.134	.528	-.648
190	354	.006	.086	.538	-.234
190	370	-.023	.083	.498	-.276
190	371	-.075	.085	.343	-.391
190	372	-.013	.135	.514	-.463
190	373	.114	.139	.725	-.274
190	406	-.691	.199	-.269	-1.921
190	407	-.291	.112	.091	-.894
190	408	-.651	.194	-.212	-1.693
190	412	-.292	.115	.129	-.844
190	453	-.479	.194	-.060	-2.827
190	458	-.225	.054	-.065	-.475
192	138	-.171	.042	-.020	-.432
192	139	-.166	.042	.003	-.450
192	149	-.356	.123	-.052	-1.319
192	170	-.312	.107	-.110	-1.130
192	171	-.356	.129	-.049	-1.384
192	201	-.303	.130	.084	-1.077
192	206	-.583	.157	-.211	-1.694
192	225	-.286	.111	-.031	-.945
192	230	-.767	.395	-.037	-3.665
192	270	-.389	.145	-.067	-1.418
192	273	-.703	.266	-.122	-2.517
192	274	-.328	.121	-.049	-1.110
192	279	-.698	.334	-.090	-3.139
192	282	-.237	.080	.021	-.648
192	285	-.760	.256	-.139	-2.631
192	337	.011	.137	.603	-.623
192	339	-.035	.132	.659	-.456
192	354	-.003	.079	.424	-.212
192	370	-.034	.079	.415	-.281
192	371	-.088	.085	.319	-.394
192	372	.015	.138	.654	-.529
192	373	.144	.140	.730	-.232
192	406	-.672	.179	-.224	-1.968
192	407	-.298	.114	.111	-1.265
192	408	-.620	.164	-.192	-1.328
192	412	-.286	.111	.121	-.861
192	453	-.481	.186	-.109	-1.858
192	458	-.219	.048	-.034	-.432

WD	TAP	CPMEAN	CPRMS	CPMAX	CPMIN
194	138	-.184	.045	.041	-.385
194	139	-.176	.045	.056	-.379
194	149	-.400	.120	.015	-1.417
194	170	-.343	.103	-.026	-1.060
194	171	-.342	.121	-.005	-1.236
194	201	-.273	.106	.051	-.840
194	206	-.659	.183	-.231	-1.947
194	225	-.263	.091	-.032	-.848
194	230	-.838	.458	-.000	-3.353
194	270	-.346	.126	-.024	-1.029
194	273	-.794	.306	-.148	-2.654
194	274	-.293	.103	.025	-.945
194	279	-.817	.412	-.081	-3.094
194	282	-.228	.070	-.012	-.621
194	285	-.778	.250	-.096	-1.759
194	337	.029	.135	.698	-.509
194	339	.000	.138	.573	-.490
194	354	-.003	.071	.457	-.198
194	370	-.041	.071	.435	-.257
194	371	-.097	.077	.389	-.409
194	372	.048	.132	.636	-.337
194	373	.190	.142	.809	-.160
194	406	-.652	.173	-.257	-1.880
194	407	-.303	.111	.109	-.761
194	408	-.596	.165	-.207	-1.500
194	412	-.308	.117	.167	-.883
194	453	-.547	.212	-.184	-1.978
194	458	-.232	.056	-.042	-.506
196	138	-.209	.056	-.023	-.455
196	139	-.200	.056	-.004	-.465
196	149	-.458	.149	-.111	-1.367
196	170	-.391	.133	-.056	-1.075
196	171	-.393	.129	-.040	-1.016
196	201	-.286	.099	.032	-1.031
196	206	-.763	.212	-.235	-2.884
196	225	-.295	.101	-.017	-.922
196	230	-1.008	.487	-.095	-3.335
196	270	-.430	.154	-.020	-1.323
196	273	-.855	.307	-.242	-2.982
196	274	-.366	.129	-.014	-1.377
196	279	-.898	.432	-.182	-3.193
196	282	-.257	.084	-.025	-.762
196	285	-.875	.268	-.111	-2.572
196	337	.055	.130	.532	-.430
196	339	.007	.131	.579	-.450
196	354	.011	.070	.341	-.204
196	370	-.033	.071	.315	-.284
196	371	-.101	.074	.285	-.407
196	372	.058	.127	.651	-.398
196	373	.219	.136	.861	-.148

WD	TAP	CPMEAN	CPRMS	CPMAX	CPMIN
196	406	-.664	.157	-.294	-1.540
196	407	-.322	.108	.153	-.761
196	408	-.610	.169	-.214	-1.740
196	412	-.331	.114	.049	-.839
196	453	-.645	.257	-.199	-2.285
196	458	-.271	.068	.015	-.584
198	138	-.216	.054	.024	-.458
198	139	-.205	.052	.016	-.451
198	149	-.484	.149	-.049	-1.360
198	170	-.411	.136	-.055	-1.178
198	171	-.407	.137	-.057	-1.172
198	201	-.275	.086	.054	-1.141
198	206	-.822	.234	-.302	-2.329
198	225	-.291	.094	-.047	-.818
198	230	-1.092	.538	.027	-3.888
198	270	-.393	.126	.057	-1.092
198	273	-.923	.313	-.120	-3.169
198	274	-.334	.105	.102	-.854
198	279	-.952	.441	-.153	-3.378
198	282	-.256	.083	-.022	-.671
198	285	-.860	.265	-.207	-2.262
198	337	.081	.132	.556	-.467
198	339	.018	.129	.529	-.421
198	354	.016	.070	.343	-.210
198	370	-.033	.071	.372	-.254
198	371	-.097	.075	.406	-.393
198	372	.070	.126	.601	-.360
198	373	.233	.137	.792	-.212
198	406	-.628	.153	-.202	-1.386
198	407	-.317	.109	.079	-.854
198	408	-.560	.149	-.153	-1.379
198	412	-.327	.112	.097	-.798
198	453	-.654	.256	-.197	-2.580
198	458	-.270	.069	.056	-.550
200	138	-.226	.060	.005	-.542
200	139	-.213	.059	-.004	-.498
200	149	-.482	.156	-.031	-1.619
200	170	-.406	.142	-.001	-1.169
200	171	-.425	.136	-.052	-1.252
200	201	-.267	.075	.095	-.737
200	206	-.904	.275	-.260	-2.706
200	225	-.294	.087	-.053	-.759
200	230	-1.081	.540	.130	-3.471
200	270	-.374	.113	-.042	-1.041
200	273	-.926	.304	-.244	-2.495
200	274	-.329	.096	-.065	-.862
200	279	-.979	.454	-.116	-3.314
200	282	-.241	.070	.036	-.607
200	285	-.802	.230	-.211	-1.902
200	337	.082	.126	.626	-.331

APPENDIX A -- PRESSURE DATA: CONFIGURATION B: 1221 BRICKELL BUILDING

WD	TAP	CPMEAN	CPRMS	CPMAX	CPMIN
200	339	.042	.134	.687	-.451
200	354	.016	.075	.371	-.212
200	370	-.037	.076	.326	-.283
200	371	-.099	.076	.223	-.514
200	372	.080	.126	.554	-.338
200	373	.247	.135	.814	-.103
200	406	-.590	.140	-.257	-1.478
200	407	-.324	.108	.069	-.893
200	408	-.522	.140	-.227	-1.518
200	412	-.319	.096	.046	-.742
200	453	-.660	.260	-.141	-2.182
200	458	-.275	.071	.079	-.371
202	138	-.229	.056	-.034	-.509
202	139	-.215	.055	-.029	-.452
202	149	-.488	.132	-.114	-1.062
202	170	-.412	.122	-.075	-.955
202	171	-.420	.134	-.025	-1.306
202	201	-.252	.065	.058	-.677
202	206	-.892	.251	-.287	-2.482
202	225	-.284	.078	-.037	-.663
202	230	-1.105	.572	.068	-3.794
202	270	-.377	.109	-.112	-.950
202	273	-.937	.301	-.231	-2.332
202	274	-.331	.095	-.065	-.714
202	279	-.982	.436	-.063	-3.067
202	282	-.231	.064	.038	-.587
202	285	-.743	.227	-.135	-1.887
202	337	.092	.123	.620	-.334
202	339	.037	.128	.705	-.348
202	354	.018	.078	.351	-.229
202	370	-.037	.080	.318	-.284
202	371	-.095	.077	.264	-.446
202	372	.088	.131	.622	-.307
202	373	.255	.140	.869	-.072
202	406	-.558	.126	-.254	-1.245
202	407	-.325	.101	.045	-.731
202	408	-.490	.124	-.168	-1.092
202	412	-.318	.097	.131	-.743
202	453	-.660	.246	-.185	-2.850
202	458	-.283	.078	.004	-.576
204	138	-.244	.055	-.052	-.468
204	139	-.229	.054	-.047	-.453
204	149	-.487	.138	-.023	-1.122
204	170	-.405	.123	.025	-.952
204	171	-.417	.139	.071	-1.172
204	201	-.249	.057	-.052	-.538
204	206	-.889	.258	-.203	-2.484
204	225	-.290	.073	-.086	-.647
204	230	-1.081	.580	.174	-3.208
204	270	-.366	.098	-.097	-.813

WD	TAP	CPMEAN	CPRMS	CPMAX	CPMIN
204	273	-.919	.316	-.074	-2.784
204	274	-.335	.087	-.075	-.652
204	279	-.937	.439	.105	-3.850
204	282	-.229	.056	.024	-.594
204	285	-.663	.207	.049	-1.544
204	337	.115	.127	.622	-.222
204	339	.065	.135	.676	-.316
204	354	.003	.073	.323	-.208
204	370	-.055	.074	.290	-.265
204	371	-.108	.074	.176	-.429
204	372	.105	.137	.632	-.233
204	373	.250	.150	.923	-.097
204	406	-.544	.126	-.221	-1.407
204	407	-.330	.101	.081	-.765
204	408	-.460	.122	-.199	-1.137
204	412	-.316	.094	.018	-.682
204	453	-.628	.235	-.139	-2.412
204	458	-.280	.075	-.024	-.627
206	138	-.258	.059	-.049	-.515
206	139	-.243	.058	-.079	-.481
206	149	-.479	.145	-.018	-1.269
206	170	-.398	.130	.004	-1.055
206	171	-.429	.142	.029	-1.108
206	201	-.251	.055	-.057	-.583
206	206	-.886	.248	-.212	-2.505
206	225	-.305	.072	-.083	-.606
206	230	-.901	.563	.336	-3.149
206	270	-.341	.086	-.099	-.907
206	273	-.829	.301	.077	-2.073
206	274	-.323	.081	-.070	-.726
206	279	-.918	.421	.358	-3.052
206	282	-.236	.052	-.067	-.508
206	285	-.632	.215	.287	-1.661
206	337	.145	.140	.701	-.236
206	339	.104	.140	.824	-.305
206	354	-.025	.071	.362	-.255
206	370	-.085	.072	.353	-.345
206	371	-.133	.074	.311	-.560
206	372	.135	.149	.690	-.266
206	373	.262	.158	.869	-.165
206	406	-.514	.114	-.233	-1.267
206	407	-.333	.105	.030	-.986
206	408	-.438	.108	-.164	-1.149
206	412	-.317	.090	.023	-.669
206	453	-.622	.209	-.235	-1.983
206	458	-.288	.074	-.001	-.591
208	138	-.288	.058	-.087	-.583
208	139	-.271	.057	-.070	-.542
208	149	-.512	.136	.148	-1.346
208	170	-.434	.124	-.024	-1.164

WD	TAP	CPMEAN	CPRMS	CPMAX	CPMIN
208	171	-.425	.127	-.008	-1.060
208	201	-.251	.053	-.063	-.497
208	206	-.817	.265	.057	-2.130
208	225	-.306	.071	-.047	-.606
208	230	-.836	.584	.284	-3.193
208	270	-.352	.087	-.106	-.774
208	273	-.818	.311	.010	-2.335
208	274	-.338	.083	-.130	-.714
208	279	-.768	.389	.319	-2.876
208	282	-.240	.050	-.065	-.438
208	285	-.532	.212	.138	-1.427
208	337	.158	.143	.712	-.272
208	339	.125	.146	.793	-.346
208	354	-.049	.064	.194	-.273
208	370	-.109	.065	.174	-.358
208	371	-.153	.069	.118	-.487
208	372	.157	.144	.835	-.363
208	373	.285	.152	.912	-.278
208	406	-.501	.108	-.228	-1.178
208	407	-.350	.103	-.027	-.779
208	408	-.426	.106	-.195	-1.085
208	412	-.327	.096	-.004	-.751
208	453	-.603	.196	-.226	-2.272
208	458	-.298	.081	-.001	-.603
282	138	-.504	.127	-.170	-1.201
282	139	-.492	.118	-.160	-1.082
282	149	-.279	.113	.181	-.805
282	170	-.281	.094	.066	-.880
282	171	-.241	.110	.132	-.741
282	201	.168	.114	.616	-.275
282	206	.208	.123	.668	-.188
282	225	-.202	.089	.203	-.596
282	230	-.152	.111	.361	-.532
282	270	-.062	.095	.330	-.380
282	273	.014	.117	.416	-.480
282	274	-.097	.096	.270	-.437
282	279	-.047	.127	.496	-.675
282	282	.022	.103	.430	-.415
282	285	.110	.113	.500	-.277
282	337	-.878	.274	-.099	-1.952
282	339	-.695	.229	-.143	-2.291
282	354	-.222	.064	.019	-.525
282	370	-.216	.061	.027	-.520
282	371	-.268	.075	-.032	-.674
282	372	-.679	.209	-.133	-1.796
282	373	-.707	.358	.213	-2.675
282	406	-.435	.086	-.203	-.861
282	407	-.415	.077	-.176	-.833
282	408	-.435	.090	-.158	-.898
282	412	-.424	.088	-.175	-.947

APPENDIX A -- PRESSURE DATA: CONFIGURATION B: 1221 BRICKELL BUILDING

WD	TAP	CPMEAN	CPRMS	CPMAX	CPMIN
282	453	-.371	.118	-.072	-1.250
282	458	-.312	.112	.022	-1.099
284	138	-.512	.119	-.169	-1.223
284	139	-.494	.113	-.146	-1.118
284	149	-.262	.113	.113	-.897
284	170	-.271	.095	.037	-1.028
284	171	-.236	.112	.119	-.761
284	201	.191	.119	.701	-.334
284	206	.213	.120	.589	-.347
284	225	-.209	.093	.119	-.539
284	230	-.163	.113	.327	-.631
284	270	-.061	.097	.305	-.413
284	273	-.002	.119	.601	-.399
284	274	-.097	.096	.332	-.449
284	279	-.051	.119	.457	-.529
284	282	.015	.104	.399	-.519
284	285	.108	.108	.564	-.328
284	337	-.873	.277	-.160	-3.032
284	339	-.701	.236	-.174	-2.502
284	354	-.217	.067	.036	-.661
284	370	-.212	.066	.098	-.717
284	371	-.259	.076	.053	-.708
284	372	-.693	.222	-.150	-2.028
284	373	-.724	.356	.257	-2.308
284	406	-.428	.087	-.190	-.853
284	407	-.414	.081	-.178	-.923
284	408	-.429	.092	-.174	-.930
284	412	-.422	.087	-.164	-.867
284	453	-.359	.118	-.067	-1.101
284	458	-.321	.129	.040	-1.200
286	138	-.494	.138	-.133	-1.320
286	139	-.471	.128	-.121	-1.407
286	149	-.243	.112	.158	-.827
286	170	-.255	.096	.086	-.724
286	171	-.224	.108	.244	-.813
286	201	.201	.122	.592	-.202
286	206	.185	.116	.543	-.257
286	225	-.206	.094	.209	-.601
286	230	-.158	.112	.340	-.732
286	270	-.072	.098	.290	-.466
286	273	-.005	.117	.427	-.471
286	274	-.106	.096	.330	-.465
286	279	-.060	.120	.430	-.505
286	282	.011	.110	.457	-.507
286	285	.091	.111	.575	-.380
286	337	-.814	.264	-.032	-2.243
286	339	-.732	.250	-.003	-2.887
286	354	-.214	.068	.034	-.583
286	370	-.210	.067	.054	-.550
286	371	-.249	.078	-.009	-.621

WD	TAP	CPMEAN	CPRMS	CPMAX	CPMIN
286	372	-.700	.219	-.023	-1.800
286	373	-.735	.329	.049	-2.176
286	406	-.420	.081	-.178	-.792
286	407	-.409	.081	-.132	-.952
286	408	-.430	.090	-.162	-1.131
286	412	-.431	.092	-.189	-.854
286	453	-.336	.116	-.059	-1.698
286	458	-.322	.137	.081	-1.497
288	138	-.521	.160	.068	-1.474
288	139	-.489	.146	.069	-1.537
288	149	-.235	.106	.104	-.911
288	170	-.252	.092	.035	-.817
288	171	-.217	.105	.205	-.817
288	201	.230	.126	.694	-.296
288	206	.174	.115	.557	-.243
288	225	-.214	.098	.253	-.627
288	230	-.151	.115	.468	-.653
288	270	-.079	.112	.379	-.540
288	273	.000	.124	.502	-.478
288	274	-.110	.106	.404	-.519
288	279	-.072	.125	.458	-.594
288	282	-.004	.120	.544	-.527
288	285	.083	.121	.698	-.401
288	337	-.852	.280	-.027	-2.407
288	339	-.754	.274	-.062	-2.508
288	354	-.206	.066	.031	-.494
288	370	-.203	.064	.027	-.545
288	371	-.237	.074	.014	-.653
288	372	-.705	.232	.034	-2.045
288	373	-.722	.333	.272	-2.425
288	406	-.424	.093	-.178	-.995
288	407	-.417	.089	-.129	-.932
288	408	-.424	.091	-.172	-.991
288	412	-.430	.091	-.177	-.870
288	453	-.315	.109	-.013	-1.188
288	458	-.309	.141	.066	-1.889
290	138	-.535	.197	-.047	-1.761
290	139	-.499	.184	-.004	-1.960
290	149	-.229	.102	.158	-.930
290	170	-.243	.092	.122	-.844
290	171	-.198	.099	.197	-1.050
290	201	.245	.120	.670	-.232
290	206	.164	.110	.567	-.249
290	225	-.215	.101	.234	-.749
290	230	-.152	.112	.256	-.699
290	270	-.097	.109	.365	-.659
290	273	-.006	.122	.476	-.484
290	274	-.126	.103	.308	-.709
290	279	-.053	.121	.654	-.557
290	282	-.003	.122	.481	-.522

WD	TAP	CPMEAN	CPRMS	CPMAX	CPMIN
290	285	.091	.127	.671	-.449
290	337	-.840	.288	.099	-2.515
290	339	-.755	.288	.224	-2.483
290	354	-.196	.059	.029	-.570
290	370	-.196	.058	.044	-.461
290	371	-.224	.064	.004	-.565
290	372	-.719	.251	-.035	-2.317
290	373	-.688	.357	.061	-2.094
290	406	-.412	.082	-.197	-1.090
290	407	-.416	.087	-.139	-.951
290	408	-.407	.090	-.181	-.928
290	412	-.420	.093	-.174	-1.184
290	453	-.294	.105	-.022	-1.223
290	458	-.306	.134	.065	-1.245
292	138	-.559	.251	.051	-2.422
292	139	-.514	.225	.039	-2.085
292	149	-.212	.086	.111	-.629
292	170	-.225	.081	.127	-.793
292	171	-.195	.086	.148	-.867
292	201	.270	.126	.763	-.247
292	206	.161	.102	.562	-.217
292	225	-.216	.110	.260	-.662
292	230	-.156	.118	.287	-.640
292	270	-.111	.111	.418	-.532
292	273	-.025	.126	.451	-.501
292	274	-.129	.106	.387	-.491
292	279	-.066	.122	.463	-.611
292	282	-.019	.130	.529	-.454
292	285	.075	.142	.666	-.405
292	337	-.820	.322	.162	-2.555
292	339	-.752	.333	.117	-2.930
292	354	-.184	.051	.120	-.769
292	370	-.186	.049	.140	-.701
292	371	-.207	.055	.050	-.731
292	372	-.695	.269	.036	-2.200
292	373	-.626	.343	.160	-2.027
292	406	-.394	.081	-.180	-.770
292	407	-.404	.090	-.144	-.984
292	408	-.395	.080	-.128	-.813
292	412	-.418	.093	-.151	-.959
292	453	-.278	.086	-.042	-1.056
292	458	-.278	.129	.035	-1.686
294	138	-.565	.268	.156	-1.928
294	139	-.523	.253	.150	-2.161
294	149	-.205	.072	.144	-.736
294	170	-.219	.071	.068	-1.018
294	171	-.185	.069	.115	-.652
294	201	.274	.129	.733	-.250
294	206	.141	.103	.587	-.233
294	225	-.192	.117	.368	-.657

APPENDIX A -- PRESSURE DATA: CONFIGURATION B: 1221 BRICKELL BUILDING

WD	TAP	CPMEAN	CPRMS	CPMAX	CPMIN
294	230	-.163	.120	.266	-.750
294	270	-.107	.122	.487	-.747
294	273	-.039	.135	.446	-.525
294	274	-.120	.117	.476	-.521
294	279	-.069	.130	.394	-.613
294	282	-.017	.143	.520	-.468
294	285	.068	.162	.679	-.459
294	337	-.843	.347	.155	-2.454
294	339	-.764	.364	.271	-2.840
294	354	-.180	.045	-.002	-.448
294	370	-.185	.043	.005	-.496
294	371	-.202	.049	.004	-.513
294	372	-.685	.298	.139	-2.144
294	373	-.582	.356	.264	-2.034
294	406	-.398	.079	-.186	-.907
294	407	-.417	.093	-.155	-.906
294	408	-.385	.077	-.145	-.819
294	412	-.418	.101	-.113	-1.137
294	453	-.257	.078	-.022	-.798
294	458	-.259	.111	.025	-1.336
296	138	-.544	.275	.157	-2.669
296	139	-.506	.267	.156	-3.097
296	149	-.196	.056	.052	-.550
296	170	-.210	.057	.071	-.533
296	171	-.179	.057	.122	-.539
296	201	.298	.135	.775	-.192
296	206	.133	.103	.478	-.249
296	225	-.165	.121	.374	-.595
296	230	-.173	.122	.397	-.676
296	270	-.097	.128	.351	-.532
296	273	-.066	.142	.445	-.535
296	274	-.101	.120	.346	-.590
296	279	-.084	.129	.538	-.529
296	282	-.009	.145	.582	-.439
296	285	.037	.158	.739	-.727
296	337	-.781	.325	.115	-2.554
296	339	-.753	.376	.240	-3.664
296	354	-.174	.043	-.007	-.398
296	370	-.182	.042	.060	-.441
296	371	-.195	.046	-.052	-.505
296	372	-.635	.300	.103	-2.463
296	373	-.542	.349	.308	-2.364
296	406	-.396	.076	-.207	-1.197
296	407	-.415	.097	-.150	-1.281
296	408	-.396	.079	-.185	-.856
296	412	-.429	.100	-.078	-.898
296	453	-.259	.075	-.075	-.645
296	458	-.264	.111	.053	-1.058
298	138	-.478	.256	.066	-2.029
298	139	-.456	.257	.133	-2.175

WD	TAP	CPMEAN	CPRMS	CPMAX	CPMIN
298	149	-.187	.048	.005	-.572
298	170	-.199	.051	.009	-.502
298	171	-.170	.045	.061	-.420
298	201	.317	.137	.797	-.258
298	206	.117	.100	.487	-.333
298	225	-.123	.126	.482	-.597
298	230	-.179	.120	.301	-.660
298	270	-.079	.130	.564	-.762
298	273	-.087	.145	.495	-.711
298	274	-.077	.123	.510	-.445
298	279	-.113	.129	.424	-.817
298	282	.003	.147	.774	-.478
298	285	.002	.160	.564	-.477
298	337	-.732	.348	.197	-2.712
298	339	-.722	.385	.098	-3.268
298	354	-.167	.039	-.012	-.385
298	370	-.176	.037	-.042	-.358
298	371	-.183	.040	-.027	-.371
298	372	-.585	.277	.203	-1.995
298	373	-.509	.327	.338	-2.256
298	406	-.379	.072	-.144	-.738
298	407	-.400	.096	-.086	-.799
298	408	-.367	.070	-.150	-.739
298	412	-.395	.096	-.096	-.806
298	453	-.234	.060	-.052	-.589
298	458	-.240	.085	-.032	-1.079
300	138	-.416	.238	.222	-1.907
300	139	-.397	.239	.122	-2.116
300	149	-.183	.040	-.025	-.368
300	170	-.193	.043	-.057	-.486
300	171	-.167	.040	.021	-.407
300	201	.362	.138	.824	-.247
300	206	.120	.093	.420	-.331
300	225	-.084	.138	.553	-.519
300	230	-.206	.121	.413	-.726
300	270	-.048	.139	.530	-.569
300	273	-.132	.135	.577	-.552
300	274	-.040	.128	.491	-.421
300	279	-.138	.121	.465	-.537
300	282	.001	.140	.755	-.473
300	285	-.031	.149	.716	-.550
300	337	-.688	.336	.045	-3.073
300	339	-.662	.342	.093	-2.686
300	354	-.161	.037	-.009	-.311
300	370	-.171	.036	-.015	-.380
300	371	-.177	.039	-.037	-.416
300	372	-.544	.277	.117	-2.252
300	373	-.486	.317	.135	-2.407
300	406	-.363	.070	-.182	-.860
300	407	-.381	.095	-.104	-.981

WD	TAP	CPMEAN	CPRMS	CPMAX	CPMIN
300	408	-.362	.075	-.150	-.905
300	412	-.388	.100	-.042	-1.123
300	453	-.225	.059	-.067	-.522
300	458	-.237	.089	-.027	-1.234
302	138	-.346	.216	.227	-1.737
302	139	-.335	.224	.178	-1.822
302	149	-.180	.036	-.003	-.395
302	170	-.189	.039	-.065	-.413
302	171	-.165	.038	.014	-.360
302	201	.397	.139	.830	-.303
302	206	.104	.093	.459	-.280
302	225	-.040	.137	.493	-.474
302	230	-.213	.111	.347	-.637
302	270	-.016	.145	.656	-.442
302	273	-.146	.124	.419	-.568
302	274	-.008	.132	.680	-.446
302	279	-.155	.120	.454	-.659
302	282	.018	.145	.820	-.371
302	285	-.045	.145	.632	-.521
302	337	-.679	.343	.084	-2.425
302	339	-.689	.380	.185	-2.471
302	354	-.162	.038	-.002	-.338
302	370	-.173	.037	.027	-.345
302	371	-.178	.040	-.014	-.362
302	372	-.531	.297	.249	-3.251
302	373	-.526	.342	.415	-2.186
302	406	-.361	.068	-.174	-.906
302	407	-.377	.089	-.093	-.956
302	408	-.354	.065	-.169	-.634
302	412	-.377	.091	-.062	-.778
302	453	-.224	.057	-.052	-.511
302	458	-.243	.077	-.078	-.848
304	138	-.282	.193	.211	-1.735
304	139	-.269	.198	.326	-2.095
304	149	-.180	.039	-.038	-.387
304	170	-.192	.040	-.065	-.441
304	171	-.161	.038	-.013	-.340
304	201	.405	.154	.903	-.223
304	206	.083	.092	.402	-.262
304	225	-.011	.136	.514	-.413
304	230	-.233	.118	.327	-.702
304	270	.016	.146	.631	-.431
304	273	-.175	.126	.507	-.574
304	274	.021	.131	.586	-.392
304	279	-.173	.118	.393	-.768
304	282	.043	.155	.689	-.352
304	285	-.065	.138	.549	-.487
304	337	-.675	.353	.071	-3.040
304	339	-.684	.387	.346	-2.680
304	354	-.162	.039	.001	-.378

APPENDIX A -- PRESSURE DATA: CONFIGURATION B: 1221 BRICKELL BUILDING

WD	TAP	CPMEAN	CPRMS	CPMAX	CPMIN
304	370	-.175	.038	-.005	-.355
304	371	-.178	.041	.002	-.397
304	372	-.546	.323	.204	-3.265
304	373	-.557	.373	.222	-3.032
304	406	-.361	.067	-.145	-.754
304	407	-.375	.085	-.045	-.814
304	408	-.348	.071	-.141	-1.049
304	412	-.366	.095	-.050	-.919
304	453	-.226	.064	-.043	-.754
304	458	-.241	.074	-.078	-.709
306	138	-.248	.185	.313	-1.465
306	139	-.239	.192	.234	-1.345
306	149	-.177	.039	.015	-.373
306	170	-.190	.042	-.057	-.392
306	171	-.157	.037	.014	-.362
306	201	.428	.144	.932	-.190
306	206	.065	.087	.380	-.301
306	225	.022	.138	.528	-.357
306	230	-.246	.118	.390	-.707
306	270	.051	.156	.633	-.368
306	273	-.194	.120	.471	-.706
306	274	.048	.141	.594	-.364
306	279	-.192	.110	.522	-.661
306	282	.058	.156	.731	-.371
306	285	-.089	.126	.550	-.508
306	337	-.679	.355	.017	-2.863
306	339	-.676	.381	.104	-3.082
306	354	-.159	.039	-.029	-.348
306	370	-.174	.038	-.025	-.336
306	371	-.174	.041	-.034	-.390
306	372	-.541	.319	.082	-2.359
306	373	-.563	.365	.257	-2.399
306	406	-.347	.069	-.106	-.782
306	407	-.353	.087	-.075	-.906
306	408	-.344	.066	-.146	-.831
306	412	-.359	.085	-.022	-.725
306	453	-.217	.061	-.037	-.558
306	458	-.249	.085	-.057	-.878
308	138	-.205	.160	.215	-1.208
308	139	-.197	.163	.263	-1.453
308	149	-.180	.042	.022	-.420
308	170	-.198	.047	-.039	-.418
308	171	-.158	.037	.026	-.323
308	201	.452	.148	1.018	-.110
308	206	.048	.087	.363	-.373
308	225	.051	.135	.636	-.395
308	230	-.263	.110	.425	-.690
308	270	.090	.152	.746	-.375
308	273	-.213	.104	.537	-.619
308	274	.086	.138	.677	-.354

WD	TAP	CPMEAN	CPRMS	CPMAX	CPMIN
308	279	-.206	.106	.266	-.609
308	282	.072	.165	.781	-.300
308	285	-.092	.125	.566	-.487
308	337	-.697	.354	.127	-2.836
308	339	-.707	.381	.464	-3.242
308	354	-.164	.046	.003	-.406
308	370	-.177	.044	-.000	-.375
308	371	-.177	.048	-.014	-.438
308	372	-.560	.330	.124	-3.760
308	373	-.601	.361	.167	-3.415
308	406	-.350	.061	-.167	-.671
308	407	-.350	.079	-.096	-.743
308	408	-.341	.063	-.162	-.683
308	412	-.351	.081	-.002	-.726
308	453	-.223	.069	-.010	-.721
308	458	-.265	.101	-.067	-.942
310	138	-.187	.173	.281	-1.609
310	139	-.179	.177	.233	-2.009
310	149	-.187	.047	.027	-.406
310	170	-.212	.058	-.014	-.529
310	171	-.158	.042	.026	-.397
310	201	.475	.153	.926	-.169
310	206	.030	.082	.281	-.292
310	225	.079	.137	.614	-.380
310	230	-.273	.110	.411	-.794
310	270	.115	.161	.701	-.401
310	273	-.224	.098	.289	-.633
310	274	.108	.146	.670	-.393
310	279	-.217	.095	.181	-.593
310	282	.091	.162	.810	-.475
310	285	-.108	.118	.434	-.536
310	337	-.699	.323	.012	-2.453
310	339	-.674	.366	.159	-2.728
310	354	-.164	.046	.036	-.447
310	370	-.178	.044	-.003	-.431
310	371	-.177	.048	.004	-.416
310	372	-.607	.347	.102	-3.262
310	373	-.647	.365	.236	-2.798
310	406	-.353	.063	-.145	-.720
310	407	-.346	.074	-.075	-.677
310	408	-.332	.061	-.138	-.667
310	412	-.339	.077	-.088	-.927
310	453	-.211	.065	-.018	-.581
310	458	-.282	.100	-.050	-1.049
312	138	-.172	.163	.259	-1.909
312	139	-.168	.165	.296	-2.047
312	149	-.186	.050	.103	-.392
312	170	-.212	.061	.007	-.509
312	171	-.160	.043	-.010	-.358
312	201	.485	.148	.974	.018

WD	TAP	CPMEAN	CPRMS	CPMAX	CPMIN
312	206	.013	.075	.359	-.428
312	225	.109	.136	.685	-.330
312	230	-.277	.104	.192	-.757
312	270	.140	.155	.698	-.429
312	273	-.232	.091	.286	-.688
312	274	.129	.141	.665	-.348
312	279	-.222	.094	.204	-.639
312	282	.105	.170	.922	-.779
312	285	-.112	.119	.646	-.494
312	337	-.668	.323	-.034	-2.688
312	339	-.659	.326	.249	-2.337
312	354	-.165	.054	.090	-.446
312	370	-.178	.051	.037	-.399
312	371	-.174	.055	.067	-.418
312	372	-.601	.329	.110	-2.467
312	373	-.625	.334	.204	-2.604
312	406	-.345	.060	-.171	-.678
312	407	-.334	.071	-.089	-.732
312	408	-.326	.061	-.125	-.769
312	412	-.331	.075	-.049	-.635
312	453	-.202	.065	-.010	-.563
312	458	-.306	.130	-.039	-1.290
314	138	-.136	.145	.362	-1.085
314	139	-.137	.142	.350	-1.487
314	149	-.184	.051	.025	-.450
314	170	-.215	.063	.009	-.552
314	171	-.160	.046	.046	-.395
314	201	.481	.150	.967	-.080
314	206	-.010	.073	.355	-.273
314	225	.126	.142	.725	-.386
314	230	-.289	.100	.144	-.650
314	270	.166	.154	.722	-.584
314	273	-.235	.086	.215	-.547
314	274	.154	.141	.684	-.411
314	279	-.228	.087	.281	-.583
314	282	.120	.173	.944	-.576
314	285	-.122	.109	.357	-.570
314	337	-.647	.300	-.063	-2.314
314	339	-.672	.331	.092	-2.822
314	354	-.166	.055	.044	-.447
314	370	-.179	.052	.025	-.520
314	371	-.173	.054	.014	-.457
314	372	-.607	.300	.163	-2.359
314	373	-.631	.302	.145	-2.041
314	406	-.344	.063	-.160	-.710
314	407	-.327	.070	-.088	-.722
314	408	-.332	.063	-.160	-.831
314	412	-.334	.071	-.055	-.632
314	453	-.208	.073	.040	-.850
314	458	-.345	.161	.002	-1.586

APPENDIX A -- PRESSURE DATA: CONFIGURATION B; 1221 BRICKELL BUILDING

WD	TAP	CPMEAN	CPRMS	CPMAX	CPMIN
316	138	-.115	.144	.379	-.890
316	139	-.121	.137	.373	-.936
316	149	-.187	.055	.010	-.398
316	170	-.229	.069	-.057	-.594
316	171	-.160	.049	.019	-.341
316	201	.502	.152	.937	.003
316	206	-.032	.071	.322	-.270
316	225	.148	.146	.664	-.396
316	230	-.292	.098	.107	-.925
316	270	.162	.165	.730	-.703
316	273	-.243	.083	.160	-.968
316	274	.154	.150	.661	-.612
316	279	-.235	.086	.274	-.530
316	282	.130	.181	.953	-.634
316	285	-.124	.118	.483	-.528
316	337	-.621	.268	-.091	-1.933
316	339	-.614	.289	.002	-2.474
316	354	-.179	.062	.181	-.566
316	370	-.188	.058	.122	-.490
316	371	-.180	.059	.133	-.491
316	372	-.607	.281	.063	-2.160
316	373	-.621	.280	.135	-2.029
316	406	-.354	.067	-.160	-.760
316	407	-.332	.071	-.091	-.663
316	408	-.336	.069	-.108	-.834
316	412	-.332	.074	-.088	-.718
316	453	-.206	.068	.017	-.715
316	458	-.397	.183	-.037	-1.531
318	138	-.082	.142	.522	-1.331
318	139	-.091	.132	.420	-1.512
318	149	-.187	.058	.080	-.431
318	170	-.237	.069	-.029	-.522
318	171	-.159	.051	.063	-.378
318	201	.505	.162	.992	-.037
318	206	-.055	.070	.156	-.355
318	225	.153	.154	.685	-.563
318	230	-.303	.096	.049	-.717
318	270	.173	.160	.725	-.719
318	273	-.249	.083	.307	-.617
318	274	.169	.147	.737	-.620
318	279	-.243	.085	.118	-.614
318	282	.095	.180	.875	-1.003
318	285	-.146	.119	.413	-.516
318	337	-.585	.245	-.065	-1.860
318	339	-.591	.251	.091	-2.132
318	354	-.189	.067	.103	-.477
318	370	-.196	.063	.063	-.511
318	371	-.186	.062	.076	-.475
318	372	-.581	.253	.076	-2.045
318	373	-.584	.250	.008	-2.139

WD	TAP	CPMEAN	CPRMS	CPMAX	CPMIN
318	406	-.358	.066	-.161	-.687
318	407	-.333	.070	-.096	-.659
318	408	-.335	.065	-.151	-.649
318	412	-.329	.068	-.111	-.658
318	453	-.205	.072	.048	-.660
318	458	-.434	.186	-.009	-1.863
320	138	-.051	.136	.436	-1.351
320	139	-.065	.124	.421	-1.539
320	149	-.177	.056	.035	-.383
320	170	-.229	.064	-.021	-.519
320	171	-.157	.052	.102	-.366
320	201	.521	.151	.954	-.131
320	206	-.069	.064	.185	-.321
320	225	.175	.161	.830	-.698
320	230	-.311	.091	.002	-.670
320	270	.150	.173	.696	-.611
320	273	-.264	.081	.095	-.598
320	274	.153	.160	.684	-.665
320	279	-.250	.086	.095	-.603
320	282	.107	.190	.856	-.745
320	285	-.151	.119	.385	-.583
320	337	-.543	.219	-.075	-2.552
320	339	-.541	.228	.024	-2.272
320	354	-.211	.076	.034	-.652
320	370	-.214	.071	.025	-.611
320	371	-.204	.071	.004	-.511
320	372	-.573	.237	-.023	-1.777
320	373	-.571	.229	-.002	-1.843
320	406	-.365	.071	-.145	-.831
320	407	-.337	.068	-.124	-.686
320	408	-.340	.069	-.140	-.711
320	412	-.332	.070	-.100	-.674
320	453	-.215	.075	-.023	-.701
320	458	-.481	.215	-.055	-1.927
322	138	-.014	.143	.620	-1.135
322	139	-.034	.133	.536	-1.245
322	149	-.178	.056	.025	-.432
322	170	-.240	.066	-.029	-.530
322	171	-.145	.048	.053	-.333
322	201	.497	.149	1.002	-.060
322	206	-.092	.061	.132	-.335
322	225	.152	.175	.741	-.559
322	230	-.312	.092	.105	-.800
322	270	.124	.174	.705	-.499
322	273	-.276	.077	.082	-.555
322	274	.126	.169	.656	-.502
322	279	-.259	.083	.026	-.612
322	282	.064	.196	.715	-1.031
322	285	-.176	.113	.352	-.595
322	337	-.500	.190	-.101	-2.111

WD	TAP	CPMEAN	CPRMS	CPMAX	CPMIN
322	339	-.514	.203	.024	-2.154
322	354	-.224	.079	.026	-.637
322	370	-.225	.074	.037	-.612
322	371	-.212	.071	.045	-.538
322	372	-.504	.217	-.015	-1.939
322	373	-.503	.210	-.027	-1.800
322	406	-.364	.071	-.145	-.832
322	407	-.332	.069	-.088	-.709
322	408	-.344	.071	-.155	-.770
322	412	-.336	.069	-.151	-.703
322	453	-.223	.078	.027	-.682
322	458	-.511	.207	-.062	-1.728
324	138	.036	.139	.594	-.443
324	139	.009	.130	.622	-.542
324	149	-.170	.055	.158	-.424
324	170	-.235	.062	.035	-.541
324	171	-.145	.053	.124	-.360
324	201	.504	.149	.947	.003
324	206	-.114	.060	.138	-.364
324	225	.159	.181	.767	-.613
324	230	-.318	.091	.070	-.764
324	270	.127	.182	.745	-.610
324	273	-.283	.078	.042	-.557
324	274	.129	.179	.711	-.776
324	279	-.271	.078	.024	-.539
324	282	.022	.219	.672	-1.195
324	285	-.197	.108	.321	-.484
324	337	-.463	.158	-.091	-1.470
324	339	-.454	.161	-.076	-1.515
324	354	-.237	.078	.031	-.660
324	370	-.241	.077	.032	-.689
324	371	-.226	.076	.109	-.889
324	372	-.488	.185	-.098	-1.924
324	373	-.490	.183	-.108	-1.710
324	406	-.377	.076	-.148	-.860
324	407	-.341	.071	-.101	-.610
324	408	-.349	.073	-.142	-.862
324	412	-.338	.069	-.125	-.693
324	453	-.235	.085	.098	-.757
324	458	-.544	.207	.043	-1.759
326	138	.082	.149	.676	-.499
326	139	.053	.143	.612	-.490
326	149	-.173	.055	.062	-.390
326	170	-.242	.062	-.047	-.576
326	171	-.138	.049	.031	-.333
326	201	.477	.150	1.045	-.080
326	206	-.134	.059	.075	-.325
326	225	.167	.193	.686	-.642
326	230	-.327	.080	-.013	-.726
326	270	.121	.179	.663	-.505

APPENDIX A -- PRESSURE DATA: CONFIGURATION B: 1221 BRICKELL BUILDING

WD	TAP	CPMEAN	CPRMS	CPMAX	CPMIN
326	273	-.301	.068	.060	-.513
326	274	.126	.181	.645	-.527
326	279	-.297	.077	.014	-.586
326	282	-.051	.246	.658	-1.461
326	285	-.232	.097	.240	-.576
326	337	-.446	.160	-.093	-1.778
326	339	-.443	.135	-.054	-1.675
326	354	-.263	.089	.064	-.656
326	370	-.268	.092	.040	-.731
326	371	-.249	.087	.055	-.683
326	372	-.459	.155	-.113	-1.590
326	373	-.461	.154	-.100	-1.675
326	406	-.386	.074	-.165	-.773
326	407	-.347	.067	-.129	-.708
326	408	-.358	.074	-.135	-.887
326	412	-.345	.068	-.092	-.706
326	453	-.266	.095	.037	-.708
326	458	-.548	.200	-.090	-1.773
328	138	.117	.155	.742	-.311
328	139	.081	.148	.703	-.429
328	149	-.167	.053	.079	-.387
328	170	-.237	.060	-.049	-.509
328	171	-.132	.050	.050	-.349
328	201	.451	.149	.986	-.009
328	206	-.145	.057	.081	-.358
328	225	.172	.184	.852	-.756
328	230	-.339	.082	.096	-.763
328	270	.120	.185	.748	-.560
328	273	-.312	.066	-.022	-.605
328	274	.124	.187	.772	-.537
328	279	-.293	.072	.237	-.541
328	282	-.030	.257	.619	-1.193
328	285	-.233	.091	.224	-.494
328	337	-.429	.125	-.081	-1.287
328	339	-.415	.121	-.094	-1.445
328	354	-.272	.093	.063	-.689
328	370	-.281	.099	.037	-.767
328	371	-.261	.092	.027	-.829
328	372	-.421	.116	-.116	-1.142
328	373	-.423	.117	-.133	-1.052
328	406	-.383	.082	-.153	-.839
328	407	-.343	.072	-.099	-.668
328	408	-.352	.076	-.130	-.861
328	412	-.339	.071	-.101	-.769
328	453	-.272	.097	.015	-.918
328	458	-.532	.183	-.066	-2.291
330	138	.168	.155	.703	-.482
330	139	.132	.154	.661	-.345
330	149	-.164	.054	.088	-.362
330	170	-.233	.061	-.032	-.526

WD	TAP	CPMEAN	CPRMS	CPMAX	CPMIN
330	171	-.134	.048	.056	-.301
330	201	.417	.162	.846	-.506
330	206	-.171	.056	.075	-.382
330	225	.149	.197	.713	-.884
330	230	-.338	.074	-.030	-.646
330	270	.108	.190	.725	-.730
330	273	-.317	.059	-.003	-.507
330	274	.114	.200	.718	-1.155
330	279	-.311	.065	.061	-.626
330	282	-.068	.257	.646	-1.237
330	285	-.260	.081	.331	-.590
330	337	-.412	.112	-.137	-1.375
330	339	-.401	.097	-.142	-1.064
330	354	-.301	.103	.029	-.781
330	370	-.316	.111	.053	-.844
330	371	-.291	.102	.053	-.820
330	372	-.419	.107	-.091	-1.294
330	373	-.421	.108	-.080	-1.288
330	406	-.402	.084	-.148	-.889
330	407	-.356	.075	-.121	-.774
330	408	-.372	.085	-.115	-.719
330	412	-.357	.077	-.072	-.751
330	453	-.303	.104	.002	-.716
330	458	-.528	.178	-.126	-2.279
332	138	.186	.167	.789	-.336
332	139	.157	.165	.775	-.300
332	149	-.165	.053	.060	-.427
332	170	-.231	.062	-.042	-.629
332	171	-.134	.050	.048	-.358
332	201	.386	.153	.888	-.267
332	206	-.185	.055	.030	-.372
332	225	.123	.209	.774	-.792
332	230	-.340	.069	-.105	-.608
332	270	.080	.193	.725	-.621
332	273	-.326	.054	-.050	-.512
332	274	.083	.205	.685	-.743
332	279	-.309	.055	-.069	-.518
332	282	-.073	.236	.555	-1.207
332	285	-.267	.066	.057	-.455
332	337	-.395	.088	-.151	-1.158
332	339	-.393	.083	-.103	-.971
332	354	-.330	.108	.139	-.776
332	370	-.354	.121	.072	-.859
332	371	-.326	.113	.004	-1.254
332	372	-.404	.089	-.166	-.971
332	373	-.405	.092	-.175	-1.011
332	406	-.410	.087	-.138	-.805
332	407	-.362	.078	-.128	-.804
332	408	-.375	.084	-.066	-.873
332	412	-.358	.075	-.112	-.746

WD	TAP	CPMEAN	CPRMS	CPMAX	CPMIN
332	453	-.328	.112	.005	-.795
332	458	-.526	.161	-.194	-2.002
334	138	.226	.171	.988	-.363
334	139	.197	.166	.847	-.307
334	149	-.161	.053	.067	-.402
334	170	-.225	.059	-.016	-.484
334	171	-.131	.049	.072	-.319
334	201	.318	.179	.817	-.528
334	206	-.206	.054	-.015	-.392
334	225	.103	.217	.736	-1.099
334	230	-.341	.062	-.144	-.615
334	270	.054	.197	.685	-.748
334	273	-.335	.050	-.128	-.552
334	274	.060	.215	.721	-1.134
334	279	-.305	.053	-.047	-.659
334	282	-.094	.238	.524	-1.432
334	285	-.274	.058	.115	-.565
334	337	-.372	.080	-.202	-.997
334	339	-.379	.079	-.093	-.841
334	354	-.353	.111	-.027	-.768
334	370	-.383	.125	.007	-.857
334	371	-.352	.119	.042	-.827
334	372	-.383	.077	-.124	-.946
334	373	-.383	.076	-.139	-.903
334	406	-.407	.087	-.180	-.904
334	407	-.358	.074	-.113	-.707
334	408	-.378	.086	-.093	-.805
334	412	-.361	.077	-.099	-.728
334	453	-.365	.111	-.048	-.762
334	458	-.491	.150	-.125	-1.442
336	138	.240	.184	.987	-.429
336	139	.215	.184	.914	-.405
336	149	-.170	.053	.113	-.391
336	170	-.230	.054	.014	-.480
336	171	-.137	.052	.075	-.363
336	201	.249	.194	.730	-.458
336	206	-.226	.054	-.033	-.421
336	225	.063	.239	.704	-1.062
336	230	-.341	.055	-.192	-.611
336	270	.017	.206	.763	-.640
336	273	-.344	.044	-.212	-.524
336	274	.027	.226	.773	-.877
336	279	-.311	.045	-.184	-.515
336	282	-.100	.227	.712	-1.478
336	285	-.283	.050	.038	-.567
336	337	-.370	.070	-.170	-.762
336	339	-.366	.070	-.170	-.623
336	354	-.388	.107	-.047	-.900
336	370	-.426	.119	-.020	-.938
336	371	-.391	.115	.027	-.934

APPENDIX A -- PRESSURE DATA: CONFIGURATION B; 1221 BRICKELL BUILDING

WD	TAP	CPMEAN	CPRMS	CPMAX	CPMIN
336	372	-.360	.068	-.162	-.721
336	373	-.358	.071	-.143	-.860
336	406	-.412	.094	-.111	-.796
336	407	-.366	.084	-.109	-1.031
336	408	-.384	.093	-.057	-.910
336	412	-.368	.086	-.110	-.812
336	453	-.381	.111	.055	-.862
336	458	-.478	.144	-.203	-1.800
338	138	.230	.182	1.012	-.352
338	139	.209	.180	.815	-.280
338	149	-.171	.055	.032	-.374
338	170	-.229	.057	-.011	-.521
338	171	-.139	.049	.080	-.379
338	201	.198	.211	.697	-.685
338	206	-.232	.050	-.058	-.404
338	225	.035	.257	.723	-1.633
338	230	-.328	.049	-.169	-.537
338	270	-.049	.215	.629	-.941
338	273	-.340	.043	-.156	-.499
338	274	-.037	.242	.711	-1.108
338	279	-.307	.042	-.166	-.469
338	282	-.109	.217	.601	-.916
338	285	-.284	.045	-.098	-.457
338	337	-.357	.065	-.149	-.679
338	339	-.359	.063	-.184	-.703
338	354	-.411	.106	-.004	-.808
338	370	-.454	.117	-.035	-.916
338	371	-.417	.112	-.037	-.927
338	372	-.353	.062	-.149	-.659
338	373	-.350	.063	-.162	-.670
338	406	-.415	.089	-.156	-.853
338	407	-.367	.079	-.047	-.924
338	408	-.389	.092	-.125	-.820
338	412	-.373	.080	-.160	-.755
338	453	-.421	.101	-.095	-.841
338	458	-.476	.121	-.187	-1.437
352	138	.061	.166	.663	-.425
352	139	.021	.159	.669	-.492
352	149	-.145	.060	.141	-.426
352	170	-.200	.060	.025	-.563
352	171	-.112	.055	.182	-.313
352	201	-.513	.276	.338	-1.686
352	206	-.265	.048	-.086	-.444
352	225	-.527	.379	.543	-3.170
352	230	-.304	.061	-.108	-.522
352	270	-.491	.221	.152	-1.530
352	273	-.371	.074	-.187	-.784
352	274	-.541	.286	.201	-1.955
352	279	-.323	.077	-.115	-.695
352	282	-.469	.264	.252	-1.738

WD	TAP	CPMEAN	CPRMS	CPMAX	CPMIN
352	285	-.271	.044	-.061	-.595
352	337	-.266	.061	-.121	-.560
352	339	-.280	.065	-.093	-.600
352	354	-.337	.104	-.052	-.831
352	370	-.381	.112	-.048	-.996
352	371	-.332	.105	-.052	-.880
352	372	-.277	.062	-.122	-.583
352	373	-.273	.065	-.122	-.580
352	406	-.381	.100	-.066	-.782
352	407	-.351	.084	-.129	-.872
352	408	-.329	.100	.070	-.793
352	412	-.349	.085	-.130	-.839
352	453	-.322	.079	-.053	-.661
352	458	-.492	.176	-.121	-1.518
354	138	.042	.160	.797	-.328
354	139	.003	.151	.713	-.423
354	149	-.144	.064	.357	-.417
354	170	-.200	.063	.150	-.513
354	171	-.112	.056	.114	-.373
354	201	-.658	.279	.210	-2.223
354	206	-.274	.050	-.085	-.494
354	225	-.651	.389	.537	-2.997
354	230	-.310	.064	-.120	-.599
354	270	-.590	.233	.279	-1.743
354	273	-.386	.079	-.165	-.818
354	274	-.664	.307	.280	-2.295
354	279	-.338	.080	-.115	-.716
354	282	-.572	.249	.264	-1.898
354	285	-.282	.044	-.126	-.579
354	337	-.273	.063	-.110	-.534
354	339	-.266	.057	-.102	-.589
354	354	-.336	.097	-.045	-.803
354	370	-.383	.103	-.082	-.833
354	371	-.327	.095	-.053	-.690
354	372	-.278	.062	-.110	-.539
354	373	-.271	.064	-.122	-.591
354	406	-.384	.105	-.026	-.874
354	407	-.361	.090	-.131	-1.212
354	408	-.323	.101	.047	-.809
354	412	-.350	.088	-.096	-.977
354	453	-.322	.073	-.144	-.692
354	458	-.493	.180	-.061	-1.934
356	138	.043	.154	.677	-.374
356	139	.006	.145	.590	-.403
356	149	-.138	.064	.193	-.427
356	170	-.193	.064	.081	-.556
356	171	-.108	.055	.189	-.320
356	201	-.743	.291	.102	-2.016
356	206	-.275	.050	-.023	-.664

WD	TAP	CPMEAN	CPRMS	CPMAX	CPMIN
356	225	-.718	.425	.200	-3.106
356	230	-.303	.064	-.079	-.570
356	270	-.624	.243	.107	-1.867
356	273	-.396	.083	-.143	-.723
356	274	-.694	.318	.151	-2.487
356	279	-.345	.084	-.096	-.750
356	282	-.622	.260	.178	-2.167
356	285	-.280	.047	-.120	-.570
356	337	-.257	.060	-.101	-.525
356	339	-.246	.054	-.079	-.516
356	354	-.318	.090	-.060	-.921
356	370	-.365	.096	-.117	-1.084
356	371	-.309	.088	-.060	-.844
356	372	-.260	.056	-.123	-.548
356	373	-.254	.057	-.123	-.590
356	406	-.367	.105	-.033	-.822
356	407	-.357	.086	-.132	-.916
356	408	-.320	.096	.002	-.784
356	412	-.349	.078	-.131	-.734
356	453	-.314	.066	-.069	-.613
356	458	-.491	.180	-.132	-1.849
358	138	.032	.153	.615	-.415
358	139	-.003	.146	.588	-.418
358	149	-.139	.061	.139	-.388
358	170	-.192	.059	.045	-.457
358	171	-.106	.055	.132	-.383
358	201	-.832	.310	.104	-2.117
358	206	-.274	.053	-.071	-.492
358	225	-.798	.422	.181	-3.261
358	230	-.301	.065	-.064	-.652
358	270	-.693	.257	-.108	-2.006
358	273	-.411	.092	-.094	-.890
358	274	-.769	.339	-.052	-2.807
358	279	-.343	.089	-.015	-.724
358	282	-.647	.248	.127	-1.706
358	285	-.273	.050	-.102	-.644
358	337	-.236	.053	-.078	-.444
358	339	-.250	.057	-.104	-.518
358	354	-.337	.096	-.060	-.803
358	370	-.384	.102	-.066	-.873
358	371	-.325	.093	.002	-.780
358	372	-.256	.055	-.108	-.618
358	373	-.248	.054	-.097	-.488
358	406	-.360	.106	-.028	-.789
358	407	-.367	.090	-.137	-.888
358	408	-.310	.096	-.003	-.824
358	412	-.355	.095	-.113	-1.204
358	453	-.303	.061	-.114	-.568
358	458	-.484	.178	-.101	-1.880