WIND-TUNNEL STUDY OF

HOUSTON NATIONAL BANK

by

J. A. Peterka* and J. E. Cermak**

for

Gerald D. Hines Interests
2100 Post Oak Tower
Houston, Texas 77056

Engineering Sciences
JUN 18 1981
Branch Library

Fluid Mechanics and Wind Engineering Program
Fluid Dynamics and Diffusion Laboratory
Department of Civil Engineering
Colorado State University
Fort Collins, Colorado 80523

Project 2-27510

April 1981

*Associate Professor
**Professor-in-Charge, Fluid Mechanics
and Wind Engineering Program

CER80-81JAP-JEC47

U18401 0075829

TABLE OF CONTENTS

Chapter		Page
	LIST OF FIGURES	ii
	LIST OF TABLES	iii
	LIST OF SYMBOLS	iv
1	INTRODUCTION	1
	1.1 General	1
	1.2 The Wind-Tunnel Test	2
2	EXPERIMENTAL CONFIGURATION	5
	2.1 Wind Tunnel	5
	2.2 Model	5
3	INSTRUMENTATION AND DATA ACQUISITION	8
	3.1 Flow Visualization	8
	3.2 Pressures	8
	3.3 Velocity	10
4	RESULTS	12
	4.1 Flow Visualization	12
	4.2 Velocity	12
	4.3 Pressures	15
	4.4 Forces and Moments	19
5	DISCUSSION	21
	5.1 Flow Visualization	21
	5.2 Pedestrian Winds	21
	5.3 Pressures	23
	REFERENCES	24
	FIGURES	25
	TABLES	59
	APPENDIX A	149

LIST OF FIGURES

Figure		Page
1	Fluid Dynamics and Diffusion Laboratory	26
2	Wind-Tunnel Configuration	27
3	Pressure Tap Locations	28
4	Building Location and Pedestrian Wind Velocity Measuring Positions	36
5	Completed Model in Wind Tunnel	37
6	Data Sampling Time Verification	38
7	Mean Velocity and Turbulence Profiles approaching the Model	39
8	Mean Velocities and Turbulence Intensities at Pedestrian Locations	40
9	Wind-Velocity Probabilities for Pedestrian Locations	48
10	Peak-Pressure Contours on the Building for Cladding Loads	51
11	Load, Shear, and Moment Diagrams for Selected Wind Directions	57

LIST OF TABLES

Table		Page
1	Motion Picture Scene Guide	60
2	Pedestrian Wind Velocities and Turbulence Intensities	61
3	Annual Percentage Frequencies of Wind Direction and Speed	66
4	Summary of Wind Effects on People	67
5	Calculation of Reference Pressure	68
6	Maximum Pressure Coefficients and Loads in PSF . . .	69
7	Loads, Shears, and Moments for each Wind Direction .	75

LIST OF SYMBOLS

Symbol	Definition
U	Local mean velocity
D	Characteristic dimension (building height, width, etc.)
ν, ρ	Kinematic viscosity and density of approach flow
$\frac{UD}{\nu}$	Reynolds number
E	Mean voltage
A, B, n	Constants
U_{rms}	Root-mean-square of fluctuating velocity
E_{rms}	Root-mean-square of fluctuating voltage
U_∞	Reference mean velocity outside the boundary layer
X, Y	Horizontal coordinates
Z	Height above surface
δ	Height of boundary layer
T_u	Turbulence intensity $\frac{U_{rms}}{U_\infty}$ or $\frac{U_{rms}}{U}$
$C_{p_{mean}}$	Mean pressure coefficient, $\frac{(p-p_\infty)_{mean}}{0.5\ \rho\ U_\infty^2}$
$C_{p_{rms}}$	Root-mean-square pressure coefficient, $\frac{\left((p-p_\infty)-(p-p_\infty)_{mean}\right)_{rms}}{0.5\ \rho\ U_\infty^2}$
$C_{p_{max}}$	Peak maximum pressure coefficient, $\frac{(p-p_\infty)_{max}}{0.5\ \rho\ U_\infty^2}$
$C_{p_{min}}$	Peak minimum pressure coefficient, $\frac{(p-p_\infty)_{min}}{0.5\ \rho\ U_\infty^2}$
$(\ )_{min}$	Minimum value during data record
$(\ )_{max}$	Maximum value during data record

Symbol	Definition
p	Fluctuating pressure at a pressure tap on the structure
p_∞	Static pressure in the wind tunnel above the model
F_x, F_y	Forces in X, Y direction
A_R	Reference Area
CF_X	Force coefficient, X direction, $\frac{F_x}{A_R \; 0.5\rho \; U_\infty^2}$
CF_Y	Force coefficient, Y direction, $\frac{F_y}{A_R \; 0.5\rho \; U_\infty^2}$

1. INTRODUCTION

1.1 General

A significant characteristic of modern building design is lighter cladding and more flexible frames. These features produce an increased vulnerability of glass and cladding to wind damage and result in larger deflections of the building frame. In addition, increased use of pedestrian plazas at the base of the buildings has brought about a need to consider the effects of wind and gustiness in the design of these areas.

The building geometry itself may increase or decrease wind loading on the structure. Wind forces may be modified by nearby structures which can produce beneficial shielding or adverse increases in loading. Overestimating loads results in uneconomical design; underestimating may result in cladding or window failures. Tall structures have historically produced unpleasant wind and turbulence conditions at their bases. The intensity and frequency of objectionable winds in pedestrian areas is influenced both by the structure shape and by the shape and position of adjacent structures.

Techniques have been developed for wind tunnel modeling of proposed structures which allow the prediction of wind pressures on cladding and windows, overall structural loading, and also wind velocities and gusts in pedestrian areas adjacent to the building. Information on sidewalk-level gustiness allows plaza areas to be protected by design changes before the structure is constructed. Accurate knowledge of the intensity and distribution of the pressures on the structure permits adequate but economical selection of cladding strength to meet selected maximum design winds and overall wind loads for the design of the frame for flexural control.

Modeling of the aerodynamic loading on a structure requires special consideration of flow conditions in order to guarantee similitude between model and prototype. A detailed discussion of the similarity requirements and their wind-tunnel implementation can be found in references (1), (2), and (3). In general, the requirements are that the model and prototype be geometrically similar, that the approach mean velocity at the building site have a vertical profile shape similar to the full-scale flow, that the turbulence characteristics of the flows be similar, and that the Reynolds number for the model and prototype be equal.

These criteria are satisfied by constructing a scale model of the structure and its surroundings and performing the wind tests in a wind tunnel specifically designed to model atmospheric boundary-layer flows. Reynolds number similarity requires that the quantity UD/ν be similar for model and prototype. Since ν, the kinematic viscosity of air, is identical for both, Reynolds numbers cannot be made precisely equal with reasonable wind velocities. To accomplish this the air velocity in the wind tunnel would have to be as large as the model scale factor times the prototype wind velocity, a velocity which would introduce unacceptable compressibility effects. However, for sufficiently high Reynolds numbers ($>2\times10^4$) the pressure coefficient at any location on the structure will be essentially constant for a large range of Reynolds numbers. Typical values encountered are 10^7-10^8 for the full-scale and 10^5-10^6 for the wind-tunnel model. In this range acceptable flow similarity is achieved without precise Reynolds number equality.

1.2 The Wind-Tunnel Test

The wind-engineering study is performed on a building or building group modeled at scales ranging from 1:150 to 1:400. The building model

is constructed of clear plastic fastened together with screws. The structure is modeled in detail to provide accurate flow patterns in the wind passing over the building surfaces. The building under test is often located in a surrounding where nearby buildings or terrain may provide beneficial shielding or adverse wind loading. To achieve similarity in wind effects the area surrounding the test building is also modeled. A flow visualization study is first made (smoke is used to make the air currents visible) to define overall flow patterns and identify regions where local flow features might cause difficulties in building curtain-wall design or produce pedestrian discomfort.

The test model, equipped with pressure taps (200 to 600 or more), is exposed to an appropriately modeled atmospheric wind in the wind tunnel and the fluctuating pressure at each tap measured electronically. The model, and the modeled area, are rotated 10 or 15 degrees and another set of data recorded for each pressure tap. Normally, 24 or 36 sets of data (360 degrees of turning) are taken; however, when flow visualization or recorded data indicate high pressure regions of small azimuthal extent, data is obtained in smaller azimuthal steps.

Data are recorded, analyzed and processed by an on-line computerized data-acquisition system. Pressure coefficients of several types are calculated by the computer for each reading on each piezometer tap and are printed in tabular form as computer readout. Using wind data applicable to the building site, representative wind velocities are selected for combination with measured pressures on the building model. Integration of test data with wind data results in prediction of peak local wind pressures for design of glass or cladding and may include overall forces and moments on the structure (by floor if desired) for design of

the structural frame. Pressure contours are drawn on the developed building surfaces showing the intensity and distribution of peak wind loads on the building. These results may be used to divide the building into zones where lighter or heavier cladding or glass may be desirable.

Based on the visualization (smoke) tests and on a knowledge of heavy pedestrian use areas, a dozen or more locations may be chosen at the base of the building where wind velocities can be measured to determine the relative comfort or discomfort of pedestrians in plaza areas, near building entrances, near building corners, or on sidewalks. Usually a reference pedestrian position is also tested to determine whether the wind environment in the building area is better or worse than the environment a block or so away in an undisturbed area.

The following pages discuss in greater detail the procedures followed and the equipment and data collecting and processing methods used. In addition, the data presentation format is explained and the implications of the data are discussed.

2. EXPERIMENTAL CONFIGURATION

2.1 Wind Tunnel

Wind-engineering studies are performed in the Fluid Dynamics and Diffusion Laboratory at Colorado State University (Figure 1). Three large wind tunnels are available for wind loading studies depending on the detailed requirements of the study. The wind tunnel used for this investigation is shown in Figure 2. All tunnels have a flexible roof adjustable in height to maintain a zero pressure gradient along the test section. The mean velocity can be adjusted continuously in each tunnel to the maximum velocity available.

2.2 Model

In order to obtain an accurate assessment of local pressures using piezometer taps, models are constructed to the largest scale that does not produce significant blockage in the wind-tunnel test section. The models are constructed of 1/2 in. thick Lucite plastic and fastened together with metal screws. Significant variations in the building surface, such as mullions, are machined into the plastic surface. Piezometer taps (1/16 in. diameter) are drilled normal to the exterior vertical surfaces in rows at several or more elevations between the bottom and top of the building. Similarly, taps are placed in the roof and on any sloping, protruding, or otherwise distinctive features of the building that might need investigation.

Pressure tap locations are chosen so that the entire surface of the building can be investigated for pressure loading and at the same time permit critical examination of areas where experience has shown that maximum wind effects may be expected to occur. Locations of the pressure taps for this study are shown in Figure 3. Dimensions are

given both for full-scale building (in ft) and for model (in in.). The pressure tap numbers are shown adjacent to the taps.

The pressure tests are sometimes made in two stages. In the first stage measurements are made on the initial distribution of pressure taps. If it becomes apparent from the data that the loading on the building is being influenced by some unsuspected geometry of the building or adjacent structures, additional pressure taps are installed in the critical areas. The locations of the taps are selected so that the maximum loading can be detected and the area over which this loading is acting can be defined. Any added taps are also shown in Figure 3.

A circular area 750 to 2000 ft in radius depending on model scale and characteristics of the surrounding buildings and terrain is modeled in detail. Structures within the modeled region are made from styrofoam and cut to the individual building geometries. They are mounted on the turntable in their proper locations. Significant terrain features are included as needed. The model is mounted on a turntable (Figure 2) near the downwind end of the test section. Any buildings or terrain features which do not fit on the turntable are placed on removable pieces which are placed upwind of the turntable for appropriate wind directions. A plan view of the building and its surroundings is shown in Figure 4. The turntable is calibrated to indicate azimuthal orientation to 0.1 degree.

The region upstream from the modeled area is covered with a randomized roughness constructed using various sized cubes placed on the floor of the wind tunnel. Different roughness sizes may be used for different wind directions. Spires are installed at the test-section entrance to provide a thicker boundary layer than would otherwise be

available. The thicker boundary layer permits a somewhat larger scale model than would otherwise be possible. The spires are approximately triangularly shaped pieces of 1/2 in. thick plywood 6 in. wide at the base and 1 in. wide at the top, extending from the floor to the top of the test section. They are placed so that the broad side intercepts the flow. A barrier approximately 8 in. high is placed on the test-section floor downstream of the spires to aid in development of the boundary-layer flow.

The distribution of the roughness cubes and the spires in the roughened area was designed to provide a boundary-layer thickness of approximately 4 ft, a velocity profile power-law exponent similar to that expected to occur in the region approaching the modeled area for each wind direction (a number of wind directions may have the same approach roughness). A photograph of the completed model in the wind tunnel is shown in Figure 5. The wind-tunnel ceiling is adjusted after placement of the model to obtain a zero pressure gradient along the test section.

3. INSTRUMENTATION AND DATA ACQUISITION

3.1 Flow Visualization

Making the air flow visible in the vicinity of the model is helpful (a) in understanding and interpreting mean and fluctuating pressures, (b) in defining zones of separated flow and reattachment and zones of vortex formation where pressure coefficients may be expected to be high and (c) in indicating areas where pedestrian discomfort may be a problem. Titanium tetrachloride smoke is released from sources on and near the model to make the flow lines visible to the eye and to make it possible to obtain motion picture records of the tests. Conclusions obtained from these smoke studies are discussed in Sections 4.1 and 5.1.

3.2 Pressures

Mean and fluctuating pressures are measured at each of the pressure taps on the model structure. Data are obtained for 24 or 36 wind directions, rotating the entire model assembly in a complete circle. Seventy-six pieces of 1/16 in. I.D. plastic tubing are used to connect 76 pressure ports at a time to an 80 tap pressure switch mounted inside the model. The switch was designed and fabricated in the Fluid Dynamics and Diffusion Laboratory to minimize the attenuation of pressure fluctuations across the switch. Each of the 76 measurement ports is directed in turn by the switch to one of four pressure transducers mounted close to the switch. The four pressure input taps not used for transmitting building surface pressures are connected to a common tube leading outside the wind tunnel. This arrangement provides both a means of performing in-place calibration of the transducers and, by connecting this tube to a pitot tube mounted inside the wind tunnel, a means of automatically monitoring the tunnel speed. The switch is operated by means of a shaft projecting through

the floor of the wind tunnel. A computer-controlled stepping motor steps the switch into each of the 20 required positions. The computer keeps track of switch position but a digital readout of position is provided at the wind tunnel.

The pressure transducers used are setra differential transducers (Model 237) with a 0.10 psid range. Reference pressures are obtained by connecting the reference sides of the four transducers, using plastic tubing, to the static side of a pitot-static tube mounted in the wind tunnel free stream above the model building. In this way the transducer measures the instantaneous difference between the local pressures on the surface of the building and the static pressure in the free stream above the model.

Output from the pressure transducers is fed to an on-line data acquisition system consisting of a Hewlett-Packard 21 MX computer, disk unit, card reader, printer, Digi-Data digital tape drive and a Preston Scientific analog-to-digital converter. The data are processed immediately into pressure coefficient form as described in Section 4.3 and stored for printout or further analysis.

All four transducers are recorded simultaneously for 16 seconds at a 250 sample per second rate. The results of an experiment to determine the length of record required to obtain stable mean and rms (root-mean-square) pressures and to determine the overall accuracy of the pressure data acquisition system is shown in Figure 6. A typical pressure port record was integrated for a number of different time periods to obtain the data shown. Examination of a large number of pressure taps showed that the overall accuracy for a 16 second period is, in pressure coefficient form, 0.03 for mean pressures, 0.1 for peak pressures, and 0.01 for rms pressures. Pressure coefficients are defined in Section 4.3.

3.3 Velocity

Mean velocity and turbulence intensity profiles are measured upstream of the model to determine that an approach boundary-layer flow appropriate to the site has been established. Tests are made at one wind velocity in the tunnel. This velocity is well above that required to produce Reynolds number similarity between the model and the prototype as discussed in Section 1.1.

In addition, mean velocity and turbulence intensity measurements are made 5 to 7 ft (prototype) above the surface at a dozen or more locations on and near the building for 16 wind directions. The measurement locations are shown on Figure 4. The surface measurements are indicative of the wind environment to which a pedestrian at the measurement location would be subjected. The locations are chosen to determine the degree of pedestrian comfort or discomfort at the building corners where relatively severe conditions frequently are found, near building entrances and on adjacent sidewalks where pedestrian traffic is heavy, and in open plaza areas. In most studies a reference pedestrian position, located about a block away, is also tested. These data are helpful in evaluating the degree of pedestrian comfort or discomfort in the proposed plaza area in terms of the undisturbed environment in the immediate vicinity.

Measurements are made with a single hot-wire anemometer mounted with its axis vertical. The instrumentation used is a Thermo Systems constant temperature anemometer (Model 1050) with a 0.001 in. diameter platinum film sensing element 0.020 in. long. Output is directed to the on-line data acquisition system for analysis.

Calibration of the hot-wire anemometer is performed by comparing output with the pitot-static tube in the wind tunnel. The calibration

data are fit to a variable exponent King's Law relationship of the form

$$E^2 = A + BU^n$$

where E is the hot-wire output voltage, U the velocity and A, B, and n are coefficients selected to fit the data. The above relationship was used to determine the mean velocity at measurement points using the measured mean voltage. The fluctuating velocity in the form U_{rms} (root-mean-square velocity) was obtained from

$$U_{rms} = \frac{2\ E\ E_{rms}}{B\ n\ U^{n-1}}$$

where E_{rms} is the root-mean-square voltage output from the anemometer. For interpretation all turbulence measurements for pedestrian winds were divided by the mean velocity outside the boundary-layer U_∞. Turbulence intensity in velocity profile measurements used the local mean velocity.

4. RESULTS

4.1 Flow Visualization

A film is included as part of this report showing the characteristics of flow about the structure using smoke to make the flow visible. A listing of the contents of the film is shown in Table 1. Several features can be noted from the visualization. As with all large structures, wind approaching the building is deflected down to the plaza level, up over the structure and around the sides. A description of the smoke test results emphasizing flow patterns of concern relative to possible high-wind load areas and pedestrian comfort is given in Section 5.1.

4.2 Velocity

Velocity and turbulence profiles are shown in Figure 7. Profiles were taken upstream from the model which are characteristic of the boundary layer approaching the model and sometimes at the building site with building removed. The boundary-layer thickness, δ, is shown in Figure 7. The corresponding prototype value of δ for this study is also shown in the figure. This value was established as a reasonable height for this study. The mean velocity profile approaching the modeled area has the form

$$\frac{U}{U_\infty} = \left(\frac{z}{\delta}\right)^n .$$

The exponent n for the approach flow established for this study is shown in Figure 7.

Profiles of longitudinal turbulence intensity in the flow approaching the modeled area are shown in Figure 7. The turbulence intensities are appropriate for the approach mean velocity profile selected. For the velocity profiles, turbulence intensity is defined

as the root-mean-square about the mean of the longitudinal velocity fluctuations divided by the local mean velocity U,

$$Tu = \frac{U_{rms}}{U} .$$

Velocity data obtained at each of the pedestrian measurement locations shown in Figure 4 are listed in Table 2 as mean velocity U/U_∞, turbulence intensity U_{rms}/U_∞, and largest effective gust

$$U_{pk} = \frac{U + 3U_{rms}}{U_\infty}$$

These data are plotted in polar form in Figure 8. Measurements were taken 5 to 7 ft above the ground surface. A site map is superimposed on the polar plots to aid in visualization of the effects of the nearby structures on the velocity and turbulence magnitudes. An analysis of these wind data is given in Section 5.2.

To enable a quantitative assessment of the wind environment, the wind-tunnel data were combined with wind frequency and direction information obtained at the local airport. Table 3 shows wind frequency by direction and magnitude obtained from summaries published by the National Weather Service. These data, usually obtained at an elevation of about 30-40 ft, were converted to velocities at the reference velocity height for the wind-tunnel measurements and combined with the wind-tunnel data to obtain cumulative probability distributions (percent time a given velocity is exceeded) for wind velocity at each measuring location. The percentage times were summed by wind direction to obtain a percent time exceeded at each measuring position independent of wind direction (but accounting for the fact that the wind blows from different directions with varying frequency). These results are plotted in Figure 9.

Interpretation of Figure 9 is aided by a description of the effects of wind of various magnitudes on people. The earliest quantitative description of wind effects was established by Sir Francis Beaufort in 1806 for use at sea and is still in use today. Several recent investigators have added to the knowledge of wind effects on pedestrians. These investigations along with suggested criteria for acceptance have been summarized by Penwarden and Wise (4) and Melbourne (5). The Beaufort scale (from ref. 4), based on mean velocity only, is reproduced as Table 4 including qualitative descriptions of wind effects. Table 4 suggests that mean wind speeds below 12 mph are of minor concern and that mean speeds above 24 mph are definitely inconvenient. Quantitative criteria for acceptance from reference 5 are superimposed as dashed lines on Figure 9. The peak gust curves shown in Figure 9 are the percent of time during which a short gust of the stated magnitude could occur (say about one of these gusts per hour). Implications of the data plotted in Figure 9 are presented in Section 5.2

Because some pedestrian wind measuring positions are purposely chosen at sites where the smoke tests showed large velocities of small spacial extent, the general wind environment about the structure may be less severe than one might infer from a strict analysis of Table 2 and Figure 9.

4.3 Pressures

For each of the pressure taps examined at each wind direction, the data record is analyzed to obtain four separate pressure coefficients. The first is the mean pressure coefficient

$$C_{p_{mean}} = \frac{(p-p_\infty)_{mean}}{0.5\ \rho\ U_\infty^{\ 2}}$$

where the symbols are as defined in the List of Symbols. It represents the mean of the instantaneous pressure difference between the building pressure tap and the static pressure in the wind tunnel above the building model, nondimensionalized by the dynamic pressure

$$0.5\ \rho\ U_\infty^{\ 2}$$

at the reference velocity position. This relationship produces a dimensionless coefficient which indicates that the mean pressure difference between building and ambient wind at a given point on the structure is some fraction less or some fraction greater than the undisturbed wind dynamic pressure near the upper edge of the boundary layer. Using the measured coefficient, prototype mean pressure values for any wind velocity may be calculated.

The magnitude of the fluctuating pressure is obtained by the rms pressure coefficient

$$C_{p_{rms}} = \frac{\left((p-p_\infty) - (p-p_\infty)_{mean}\right)_{rms}}{0.5\ \rho\ U_\infty^{\ 2}}$$

in which the numerator is the root-mean-square of the instantaneous pressure difference about the mean .

If the pressure fluctuations followed a Gaussian probability distribution, no additional data would be required to predict the

frequency with which any given pressure level would be observed. However, the pressure fluctuations do not, in general, follow a Gaussian probability distribution so that additional information is required to show the extreme values of pressure expected. The peak maximum and peak minimum pressure coefficients are used to determine these values:

$$C_{p_{max}} = \frac{(p-p_\infty)_{max}}{0.5\ \rho\ U_\infty^{\ 2}}$$

$$C_{p_{min}} = \frac{(p-p_\infty)_{min}}{0.5\ \rho\ U_\infty^{\ 2}}$$

The values of $p-p_\infty$ which were digitized at 250 samples per second for 16 seconds, representing about one hour of time in the full-scale, are examined individually by the computer to obtain the most positive and most negative values during the 16-second period. These are converted to $C_{p_{max}}$ and $C_{p_{min}}$ by nondimensionalizing with the free stream dynamic pressure.

The four pressure coefficients are calculated by the on-line data acquisition system computer and tabulated along with the approach wind azimuth in degrees from true north. The list of coefficients is included as Appendix A. The pressure tap code numbers used in the appendix are explained in Figure 3.

To determine the largest peak loads acting at any point on the structure for cladding design purposes, the pressure coefficients for all wind directions were searched to obtain, at each pressure tap, the largest absolute value of peak pressure coefficient. Table 6 provides these pressure coefficients and associated wind directions. Included in Section 5.3 is an analysis of the coefficients of Table 6 including the maximum values obtained and where they occurred on the building.

The pressure coefficients of Table 6 can be converted to full-scale loads by multiplication by a suitable reference pressure selected for the field site. This reference pressure is represented in the equations for pressure coefficients by the $0.5\ \rho\ U_\infty^2$ denominator. This value is the dynamic pressure associated with an hourly mean wind at the reference velocity measurement position at the edge of the boundary layer. In general, the method of arriving at a design reference pressure for a particular site involves selection of a design wind velocity, translation of the velocity to an hourly mean wind at the reference velocity location and conversion to a reference pressure. Selection of the design velocity can be made from statistical analysis of extreme wind data or selected from wind maps contained in the proposed wind loading code ANSI A58.1 of the American National Standards Institute (6). The calculation of reference pressure for this study is shown in Table 5. The factor used in Table 5 to reduce gust winds to hourly mean winds is given in reference (7).

The reference pressure associated with the design hourly mean velocity at the reference velocity location can be used directly with the peak-pressure coefficients to obtain peak local design wind loads for cladding design. Local, instantaneous peak loads on the full-scale building suitable for cladding design were computed by multiplying the reference pressure of Table 5 by the peak coefficients of Table 6 and are listed as peak pressures in that table. The maximum psf load given at each tap location is the absolute value of the maximum value found in the tests, irrespective of its algebraic sign. For ease in visualizing the loads on the structure, contours of equal peak pressures for cladding load shown in Table 6 have been plotted on developed elevation

views of the structure, Figure 10. For control of water infiltration from outside to inside, the largest positive (inward-acting) pressure at each tap location is tabulated in Table 6.

For glass design pressures, a glass load factor is used to account for the different duration between measured peak pressures and the one minute loading commonly used in glass design charts. The design pressure used for glass is normally less than the peak pressures used for cladding design because of the static fatigue property of glass which can withstand higher pressures for short duration loads than for long duration loads. Recent research (8) indicates that the period of application of the peak pressures reported herein is about 5-10 seconds or less. If a glass design is based on these peak-pressure values, then a glass strength associated with this duration load should be used. Because glass design charts are normally based on some alternate load duration--usually one minute--then some reduction in peak loads should be made. An estimate of a load reduction factor can be obtained from an empirical relation of glass strength as a function of load duration. Current glass selection charts showing glass strength as a function of load duration (9) and older references (10) indicate the following load reduction factors:

	ref 9	ref 10
annealed float	0.80	0.81
heat strengthened	0.94	
tempered	0.97	0.98

Loadings appropriate for glass design can be computed by multiplying the peak-pressure loads of Table 6 by these load factors.

4.4 Forces and Moments

Force coefficients in the horizontal X and Y directions and moment coefficients about the X, Y, and Z axes with the origin at ground level at the base of the building with Z axis vertical may be computed for all wind directions tested by integration of mean pressures on the building. Overall forces and moments acting on the full-scale building due to wind loading which are useful in designing the structural framing of the proposed building may be obtained from use of these coefficients.

Force coefficients were computed for each floor for each wind direction using the equations shown below.

$$CF_X = \frac{F_X}{A_R \; 0.5 \; \rho \; U_\infty^{\;2}} \qquad CF_Y = \frac{F_Y}{A_R \; 0.5 \; \rho \; U_\infty^{\;2}}$$

Terms and symbols used in the equations are defined in the List of Symbols and the axes are defined for the building in Figure 3. Force coefficients CF_X and CF_Y were computed for the horizontal forces acting along the X and Y axes using the mean pressure coefficient at each pressure tap. A_R represents a constant reference area for nondimensionalization of the forces and moments.

The total forces acting on the full-scale building for each floor and wind direction were computed by multiplying the above coefficients by the appropriate full-scale reference area, by the reference pressure of Table 5, and by a gust load factor selected for an appropriate wind gust duration. The gust load factor, shown in Table 5, was selected to increase the loads from an hourly mean load to that of a gust whose duration would be sufficient for its effect to be fully felt by the structure. A table of gust load factors for various gust durations is

incorporated in Table 5 so that force and moment data of Table 7 may be adjusted to a different load duration if desired.

The forces obtained at each floor were used to obtain load, shear, and moment diagrams for the building for each wind direction. The shear diagram, in kips, was obtained by algebraic sum of all forces in each coordinate direction acting above the floor of interest. The load diagram, in psf, was obtained by dividing the shear values by their contributing areas (listed in Table 7). The moment diagram, in 1000 ft-kips, was obtained by integration of the shear values so that the moment due to forces acting above the floor level of interest was calculated. The sign of the moment was established by the right-hand rule about an X', Y' axis through the floor of interest. Moments about the Z axis were calculated by considering the displacement of forces in the X and Y directions from the Z axis shown in Figure 3. Load, shear, and moment diagrams are shown in Figure 11 for several wind directions.

5. DISCUSSION

5.1 Flow Visualization

Flow patterns identified with smoke showed evidence of vortex flows near the spire setbacks on the upper portion of the tower that could lead to high localized peak pressures. Winds deflected from adjacent buildings appeared to cause higher velocities impinging on the structure for some wind directions than would occur in the absence of adjacent structures. Winds at sidewalk level about the building appeared to be fairly strong for a wide range of wind directions. These winds resulted primarily from winds deflected downward by the Houston National Bank building itself but also winds deflected by adjacent buildings.

5.2 Pedestrian Winds

Figure 4 shows the 15 pedestrian locations selected for investigation of pedestrian wind comfort. Locations 1 and 2 were selected as reference locations which should be reasonably undisturbed by presence of the Houston National Bank building. Table 2 and Figure 8 show that the largest values of mean velocity were measured at locations 6, 13, 14 and 1 with values ranging from 63 to 74 percent of the mean velocity, U_∞, at the boundary layer height. The highest mean velocities were measured at or near the building corners. These values compare to the largest values of 65 and 39 percent at reference locations 1 and 2 and a value of 40-45 percent which might be expected in an open-country environment.

The largest values of fluctuating velocity, U_{rms}, were measured at reference location 1 with values ranging from 17 to 22 percent of

U_∞. The largest values at the base of the Houston National Bank building were 15 and 16 percent of U_∞ measured at locations 5, 7 and 10. For comparison, values of 10-11 percent might be expected in an open-country country environment. The largest values of peak gust, represented by the mean plus three rms as discussed in section 4.2, were obtained at locations 1 and 6 with values from 105 to 112 percent of U_∞ for three wind directions at location 1 and two wind directions at location 6. In an open-country environment, the largest values of peak-gust expected might be 80-90 percent of U_∞.

Velocity data of Table 2 integrated with local wind data shown in Table 3 are shown in Figure 9. Based on the data of this figure, the windiest location of those measured was reference location 1 at the corner of a large nearby building. Figure 9 indicates that this location will be uncomfortable for walking 20-40 percent of the time and unacceptably windy 6-8 percent of the time for mean winds. Evaluation of location 1 using past experience can verify the general level of acceptability predicted herein. Locations 3 and 6 at corners of the bank tower were the windiest locations about the base of the Houston National Bank. Figure 9 indicates that these locations should be uncomfortable for walking 10-20 percent of the time and unacceptably winds less than 1 percent of the time for mean winds. These locations have somewhat less concern for peak gust values. Locations 11, 12, 14 and 15 indicated conditions uncomfortable for walking 15-30 percent of the time for mean velocity but would not be considered unacceptable for a significant percentage of time.

The overall results of the pedestrian wind analysis is that the sidewalk areas at the base of the Houston National Bank building will be considered to be fairly windy, sometimes uncomfortable for walking, but not often unacceptably windy. All areas at the base of the Bank building will have a better wind environment than that of the reference location 1. Some locations will be less windy and some more windy than the conditions at reference location 2.

5.3 Pressures

Table 6 shows the largest pressure coefficients and corresponding loads measured on the building for each pressure tap location. Data identified as Configuration A in Table 6 and Appendix A represent data obtained at all tap locations for 36 wind directions. Configuration B data represent data obtained at selected taps at 2 degree azimuthal resolution near azimuths where large peaks were observed to ensure that the largest peaks were obtained. The largest peak pressure coefficients measured on the building were -3.06 measured at taps 224 and 353 for wind azimuths of 223 and 80 degrees respectively. These data represent a vortex formation about a setback near the top of the tower (tap 224) and a vortex formed by wind flowing down the east face and around the corner onto the south face of the structure at the point where the lower building adjoins the tower. These largest peak coefficients represent, using the reference pressure of Table 5, peak pressures of 92 psf for a 100-year recurrence wind. Figure 10 shows that most areas of the building had peak pressures in the 30-50 psf range.

Figure 11 shows load, shear, and moment diagrams for the largest loads in the X and Y directions.

REFERENCES

1. Cermak, J. E., "Laboratory Simulation of the Atmospheric Boundary Layer," AIAA Jl., Vol. 9, September 1971.

2. Cermak, J. E., "Applications of Fluid Mechanics to Wind Engineering," A Freeman Scholar Lecture, ASME Jl. of Fluids Engineering, Vol. 97, No. 1, March 1975.

3. Cermak, J. E., "Aerodynamics of Buildings," Annual Review of Fluid Mechanics, Vol. 8, 1976, pp. 75-106.

4. Penwarden, A. D., and Wise, A. F. E., "Wind Environment Around Buildings," Building Research Establishment Report, HMSO, 1975.

5. Melbourne, W. H., "Criteria for Environmental Wind Conditions," Jl. Industrial Aerodynamics, vol. 3, pp. 241-247, 1978.

6. American National Standards Institute, "American National Standard Building Code Requirements for Minimum Design Loads in Buildings and Other Structures," ANSI Standard A58.1, 1972.

7. Hollister, S. C., "The Engineering Interpretation of Weather Bureau Records for Wind Loading on Structures," Building Science Series 30--Wind Loads on Buildings and Structures, National Bureau of Standards, pp. 151-164, 1970.

8. Peterka, J. A., and Cermak, J. E., "Peak-Pressure Duration in Separated Regions on a Structure," U.S.-Japan Research Seminar on Wind Effects on Structures, Kyoto, Japan, 9-13 September 1974; Report CEP74-75JAP-JEC8, Fluid Mechanics Program, Colroado State University, September 1974.

9. PPG Glass Thickness Recommendations to Meet Architects' Specified 1-Minute Wind Load, Pittsburgh Plate Glass Industries, April 1979.

10. Shand, E. B., "Glass Engineering Handbook," Second Edition, McGraw-Hill, New York, p. 51, 1958.

FIGURES

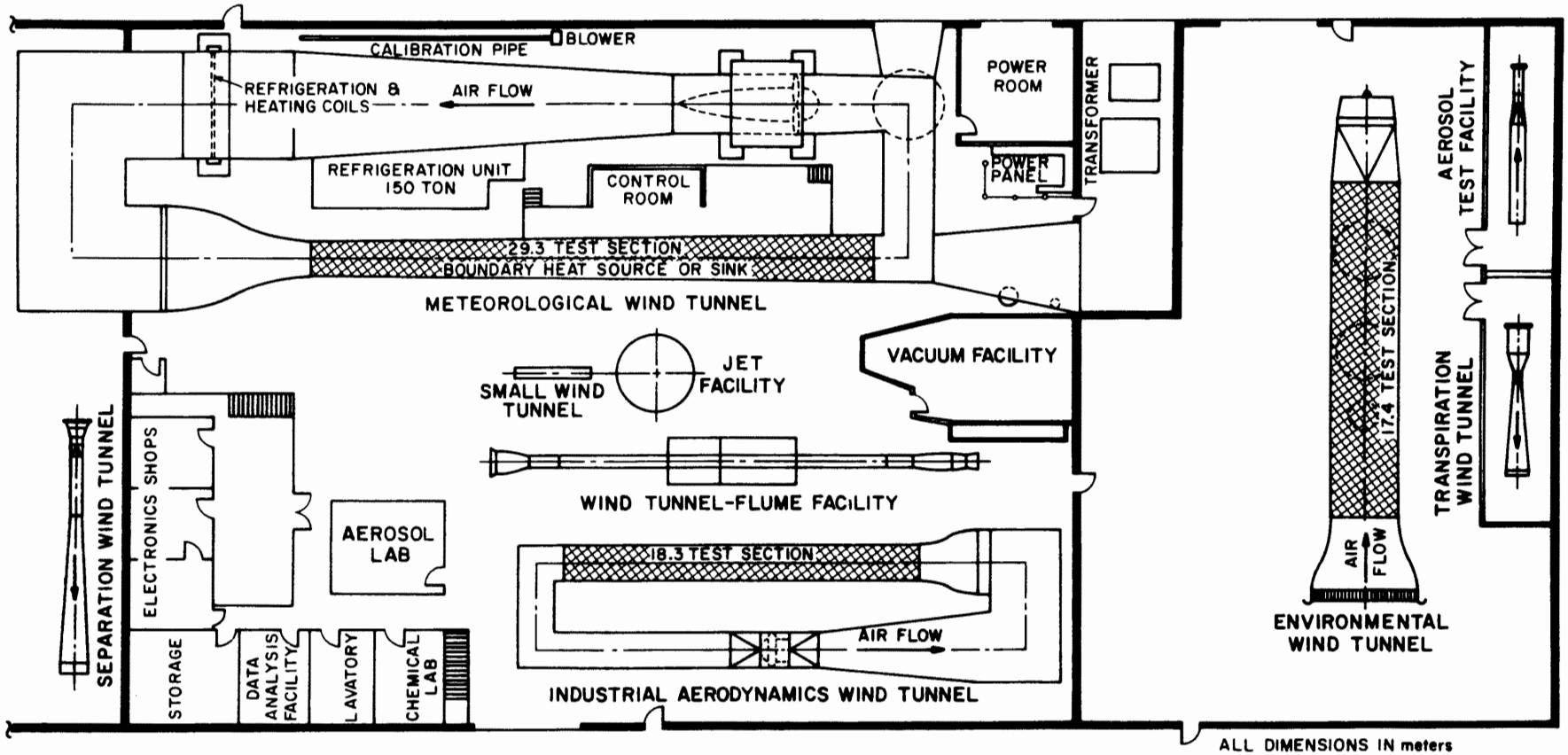

FIGURE 1 - FLUID DYNAMICS AND DIFFUSION LABORATORY
COLORADO STATE UNIVERSITY

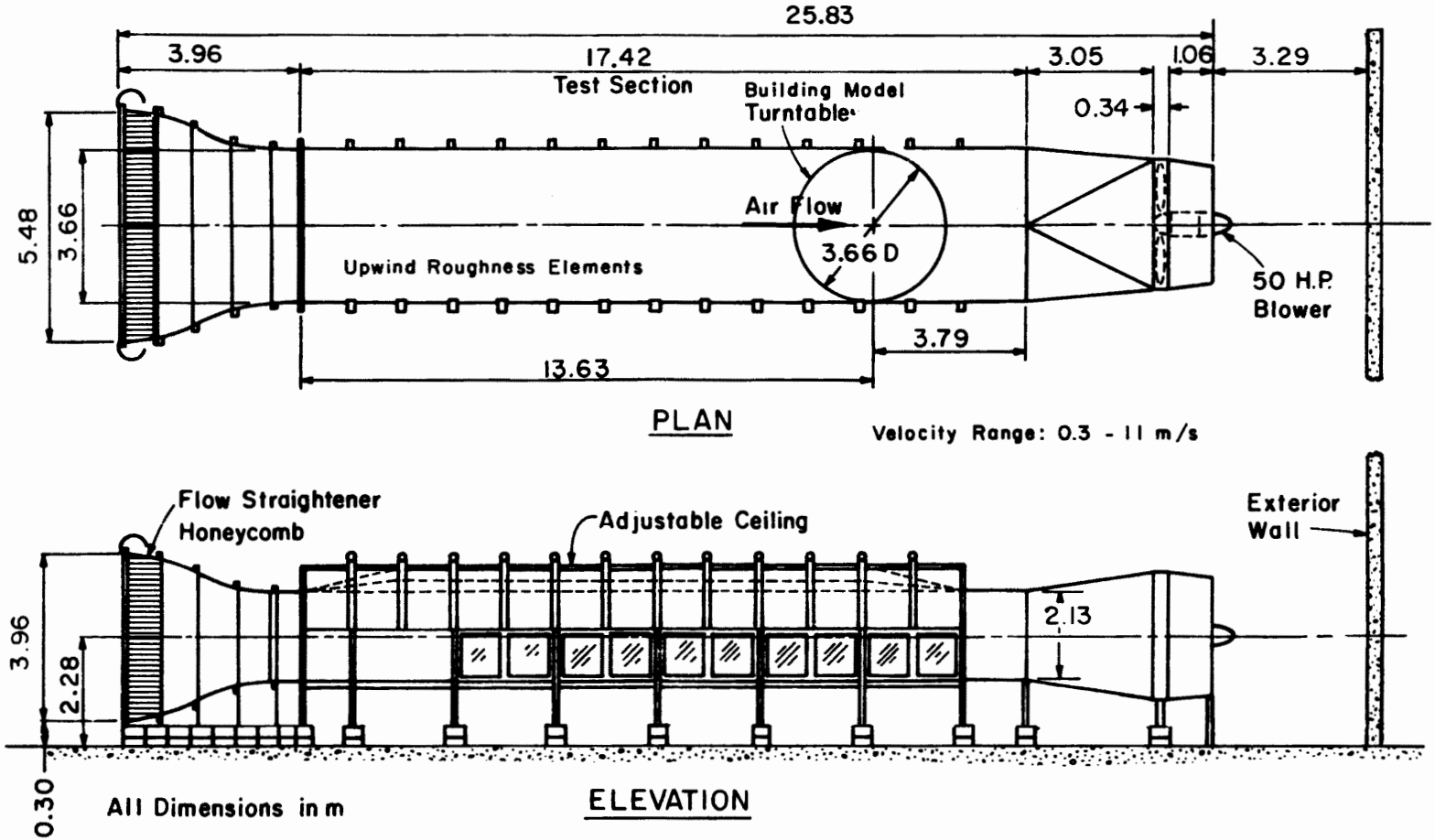

ENVIRONMENTAL WIND TUNNEL

Figure 2 - Wind Tunnel Configuration

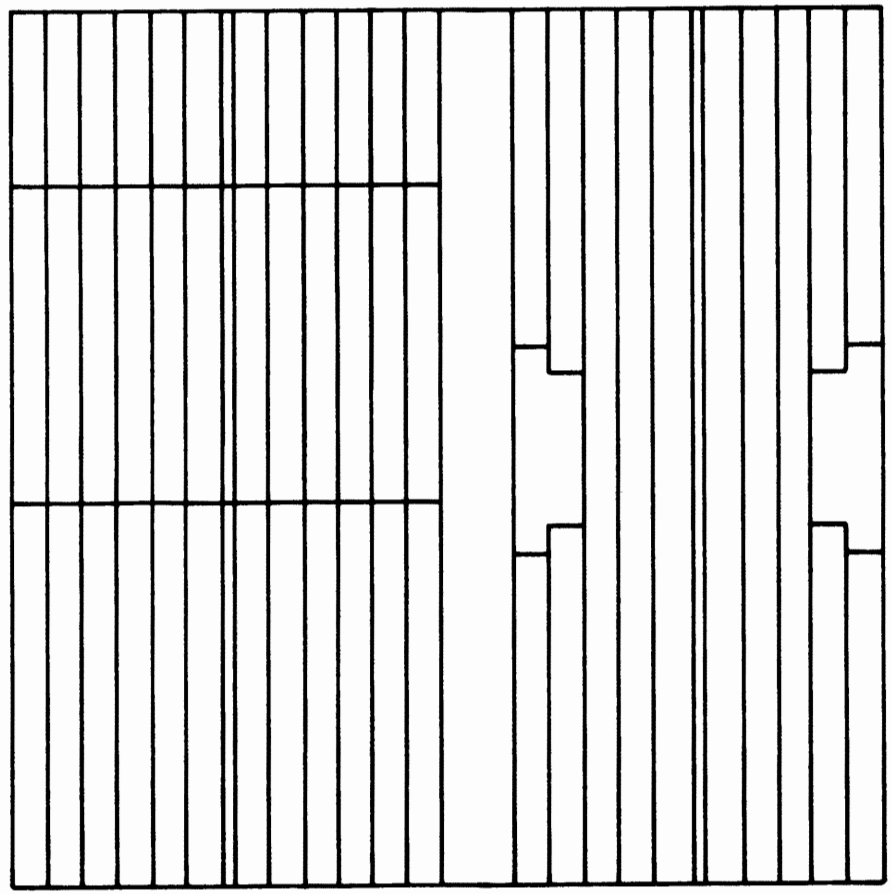

ROOF

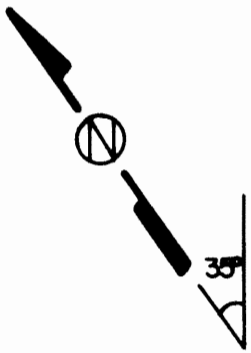

MODEL SCALE = 1/400
TOTAL TAPS = 435
DIMENSIONS IN FULL SCALE FEET
AND MODEL INCHES.

Figure 3a. Pressure Tap Locations

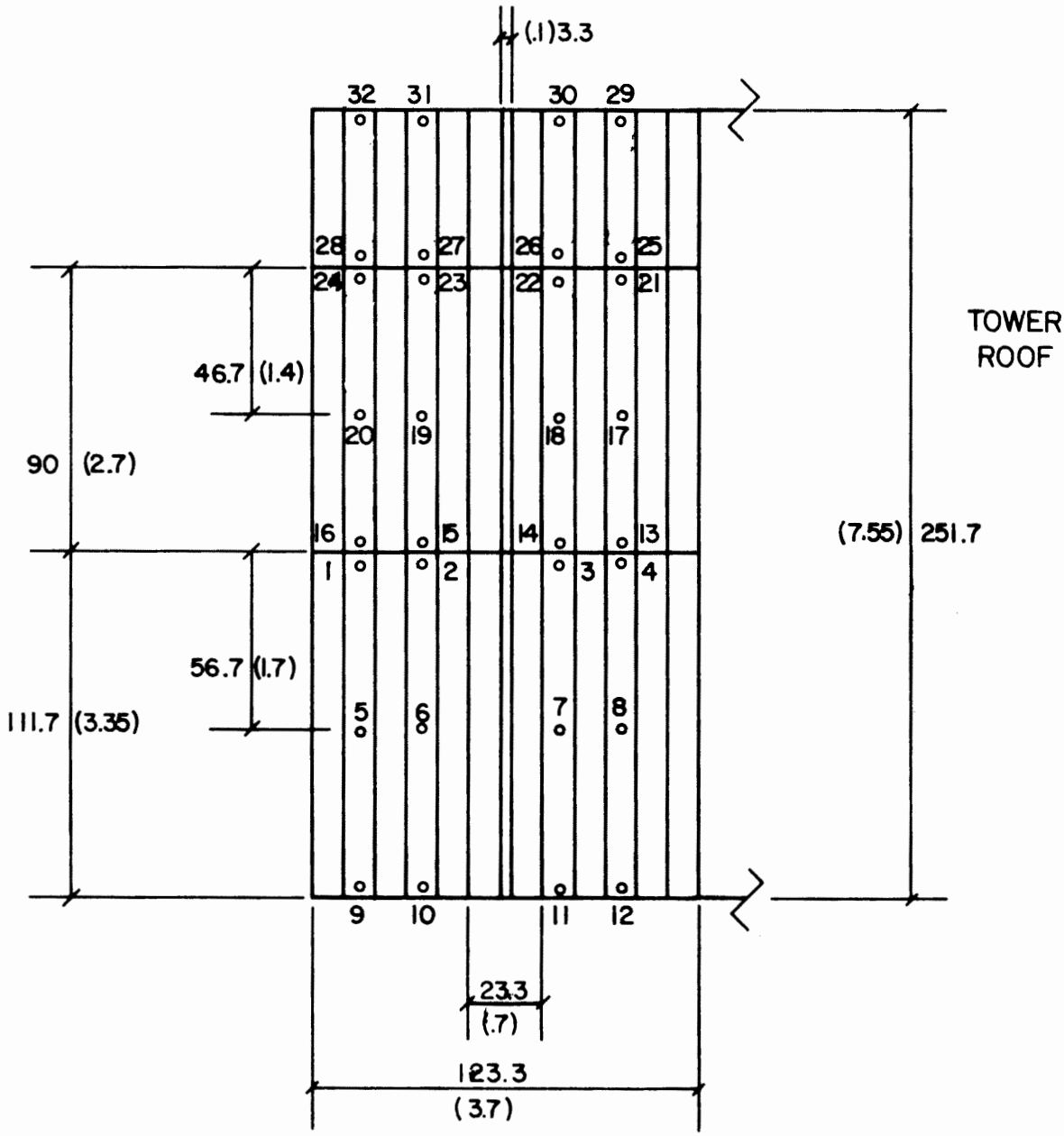

Figure 3b. Pressure Tap Locations

ROOF OF LOWER BUILDING

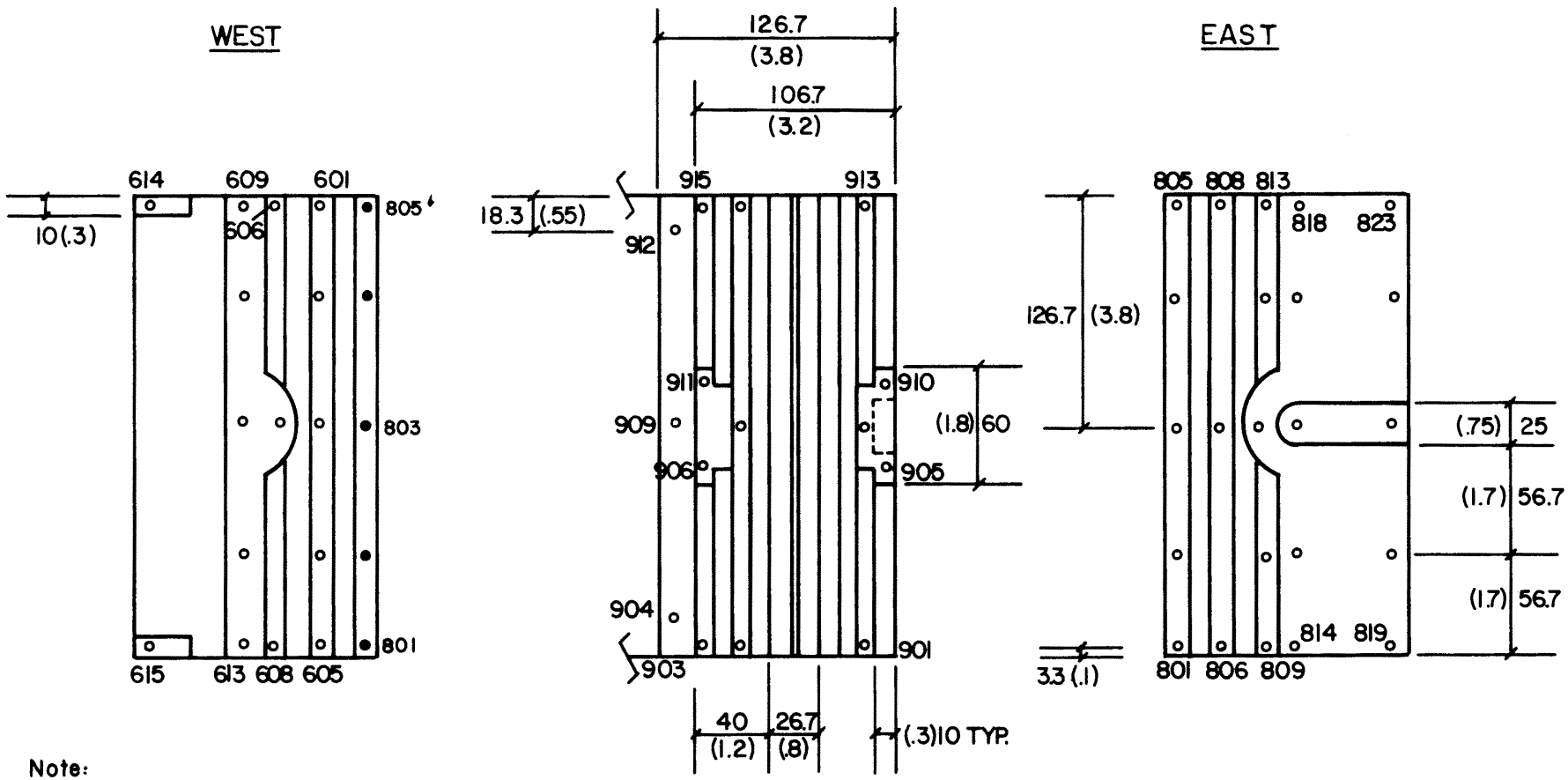

Note:
Taps shown for the 800 series in the west view represent data taken on opposite (east) side and used for information on the west side.

Figure 3c. Pressure Tap Locations

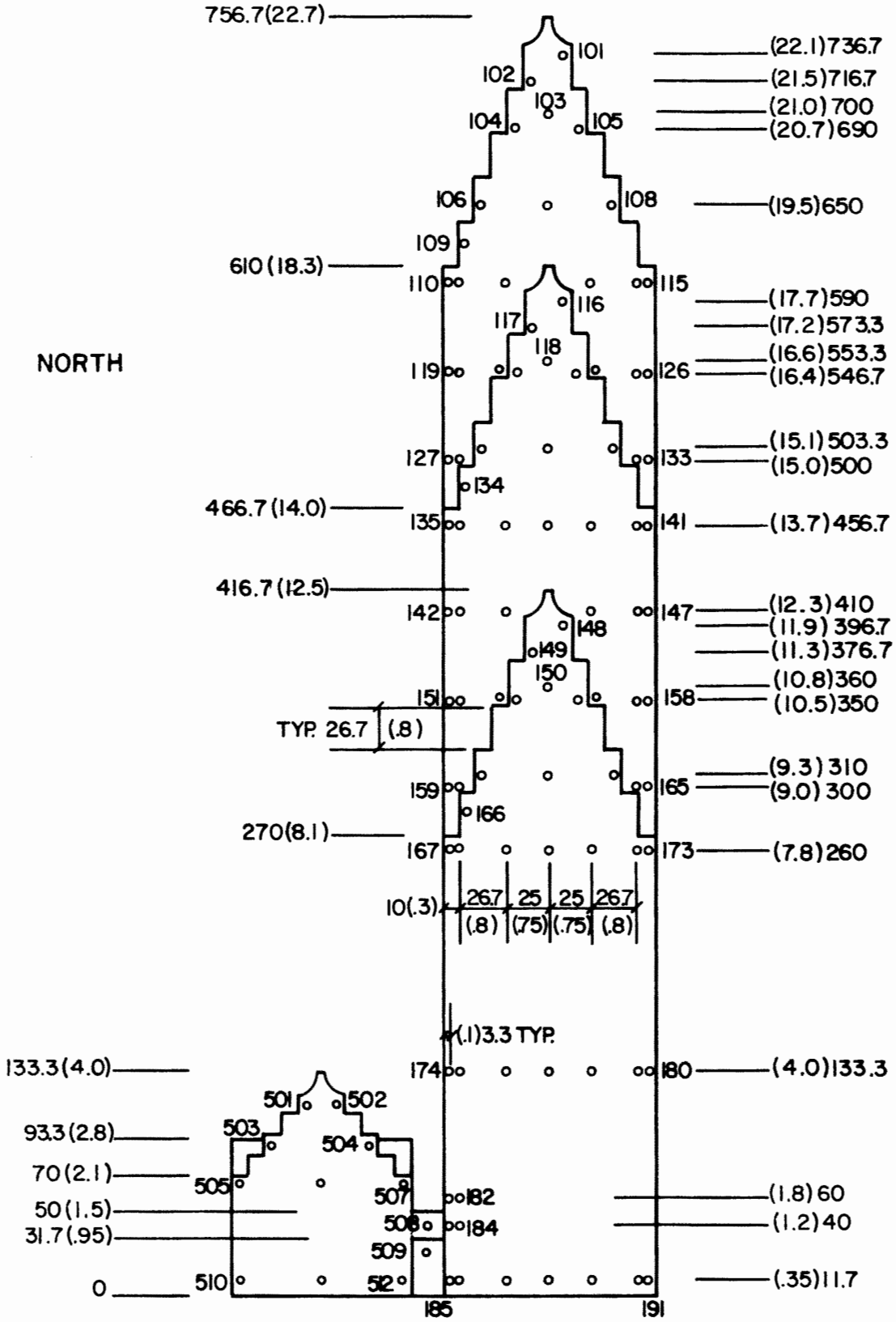

Figure 3d. Pressure Tap Locations

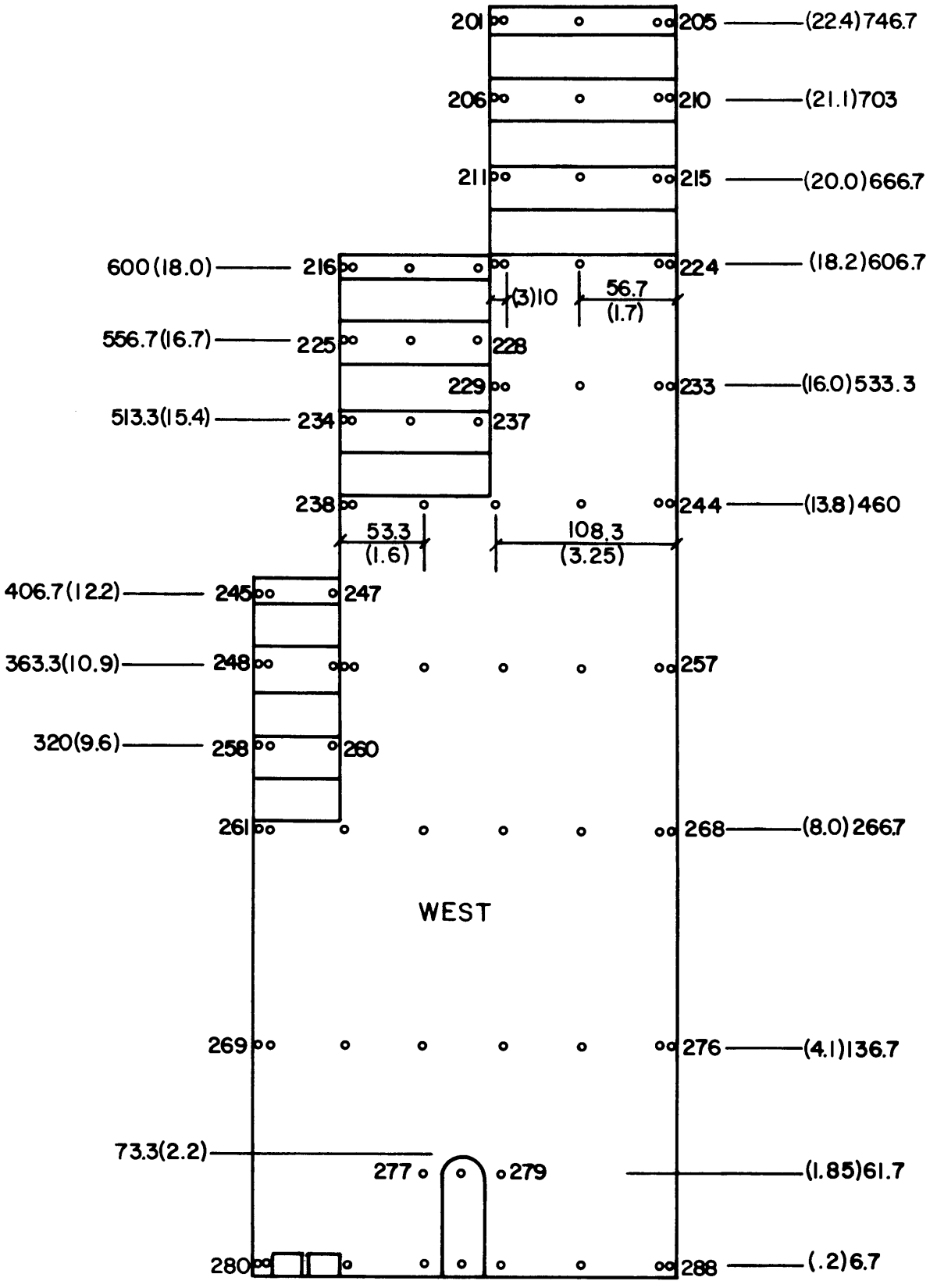

Figure 3e. Pressure Tap Locations

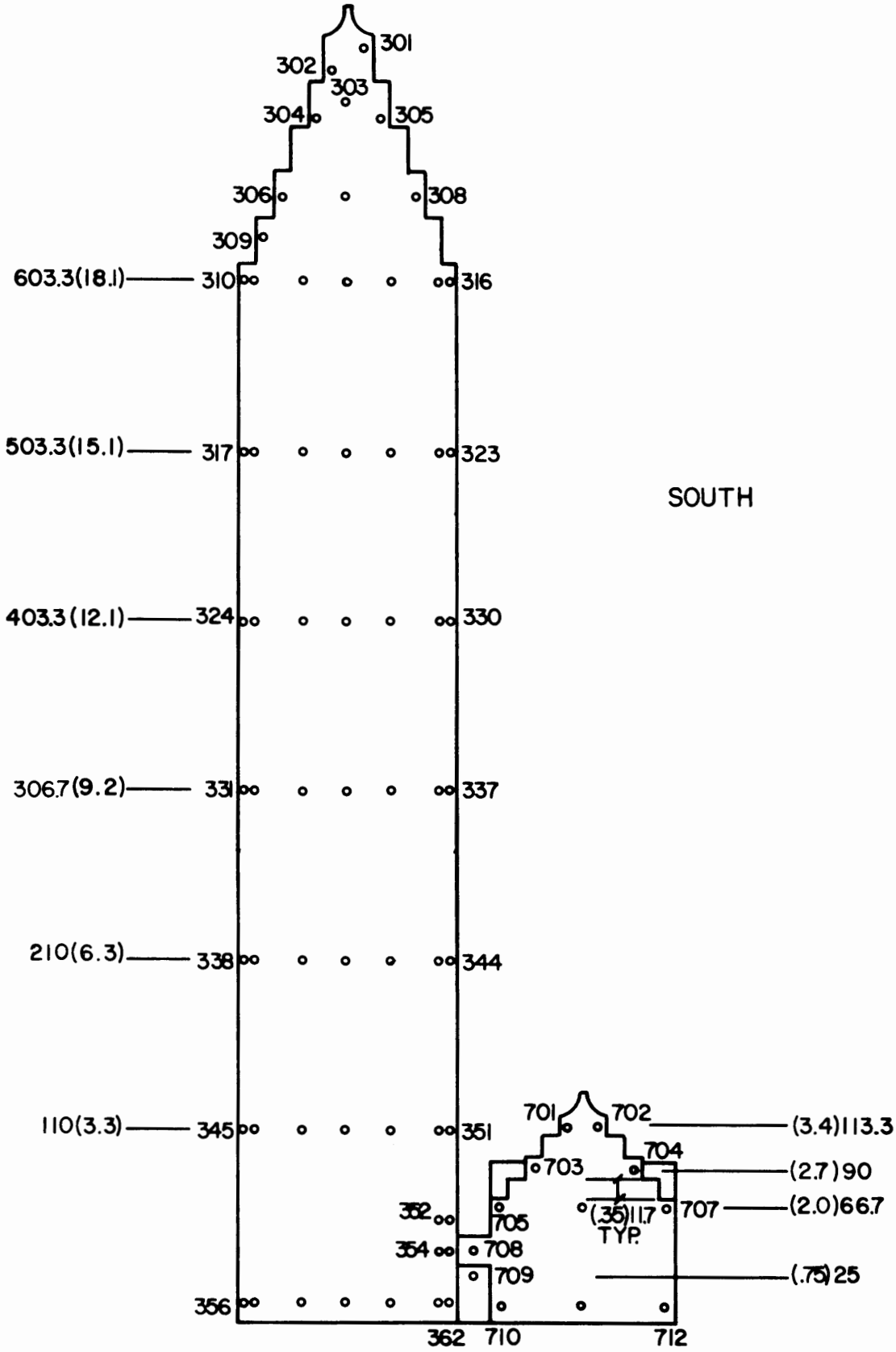

Figure 3f. Pressure Tap Locations

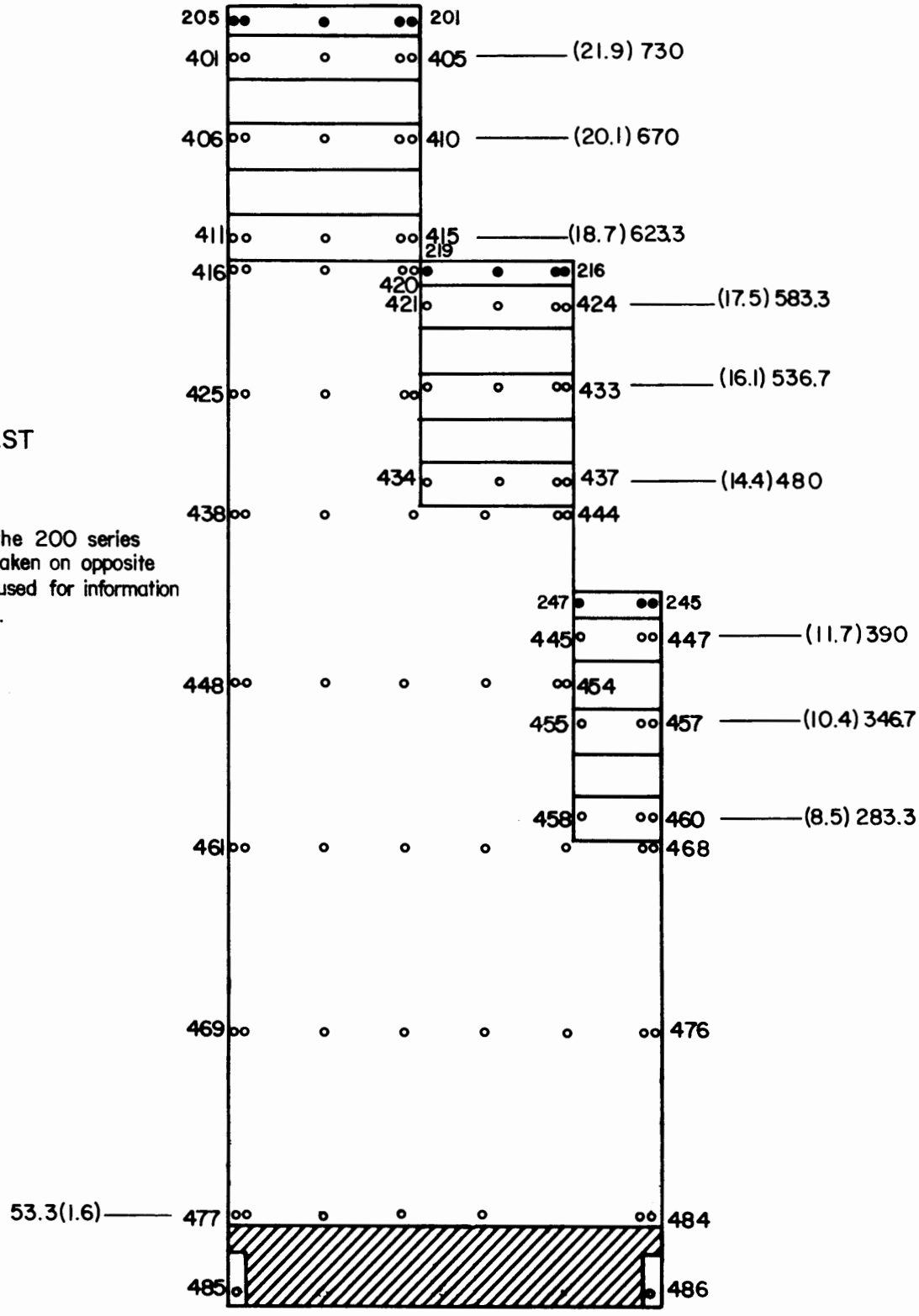

EAST

Note:

Taps shown for the 200 series represent data taken on opposite (west) side and used for information on the east side.

Figure 3g. Pressure Tap Locations

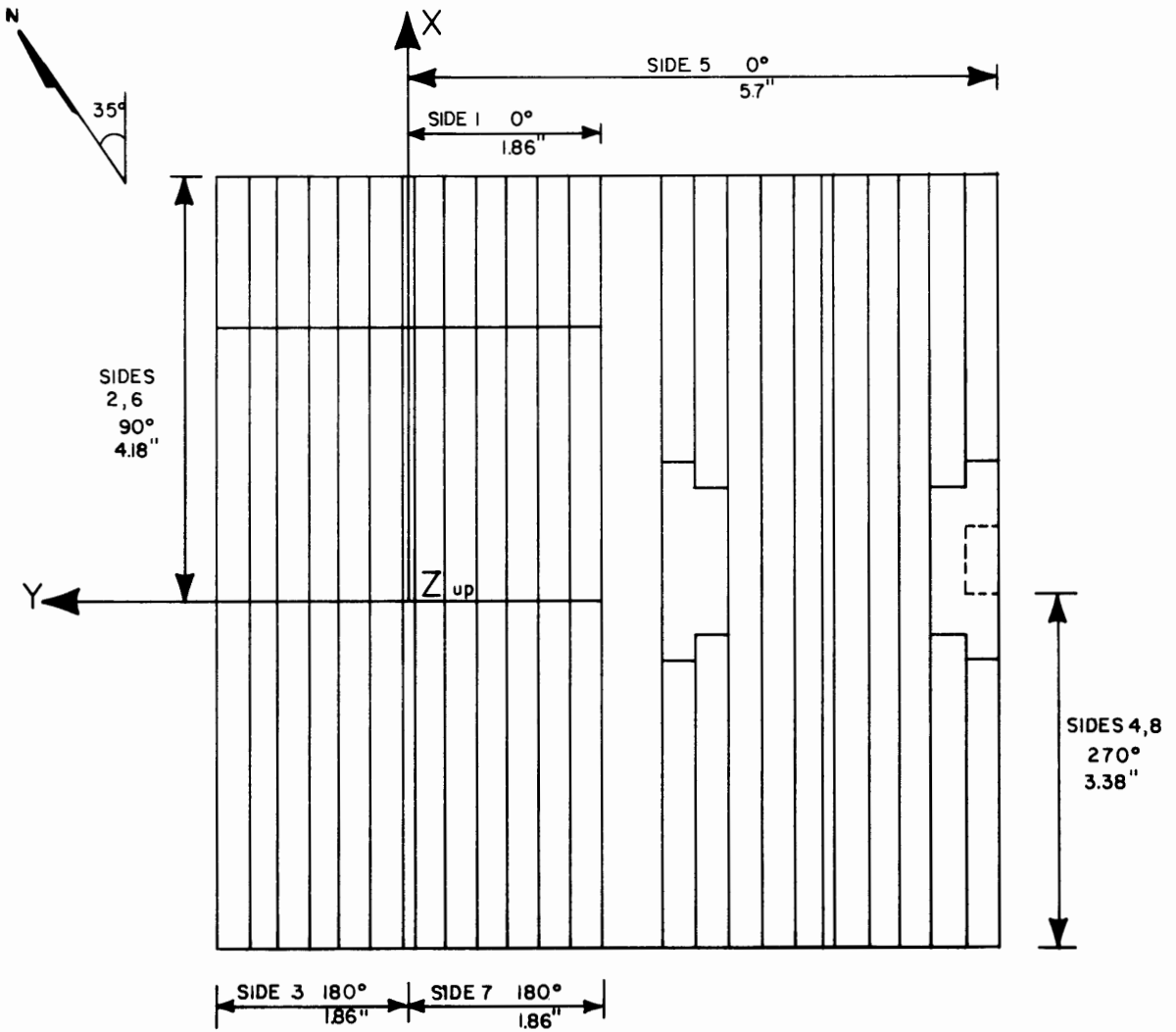

Figure 3h. Force and Moment Coordinate System

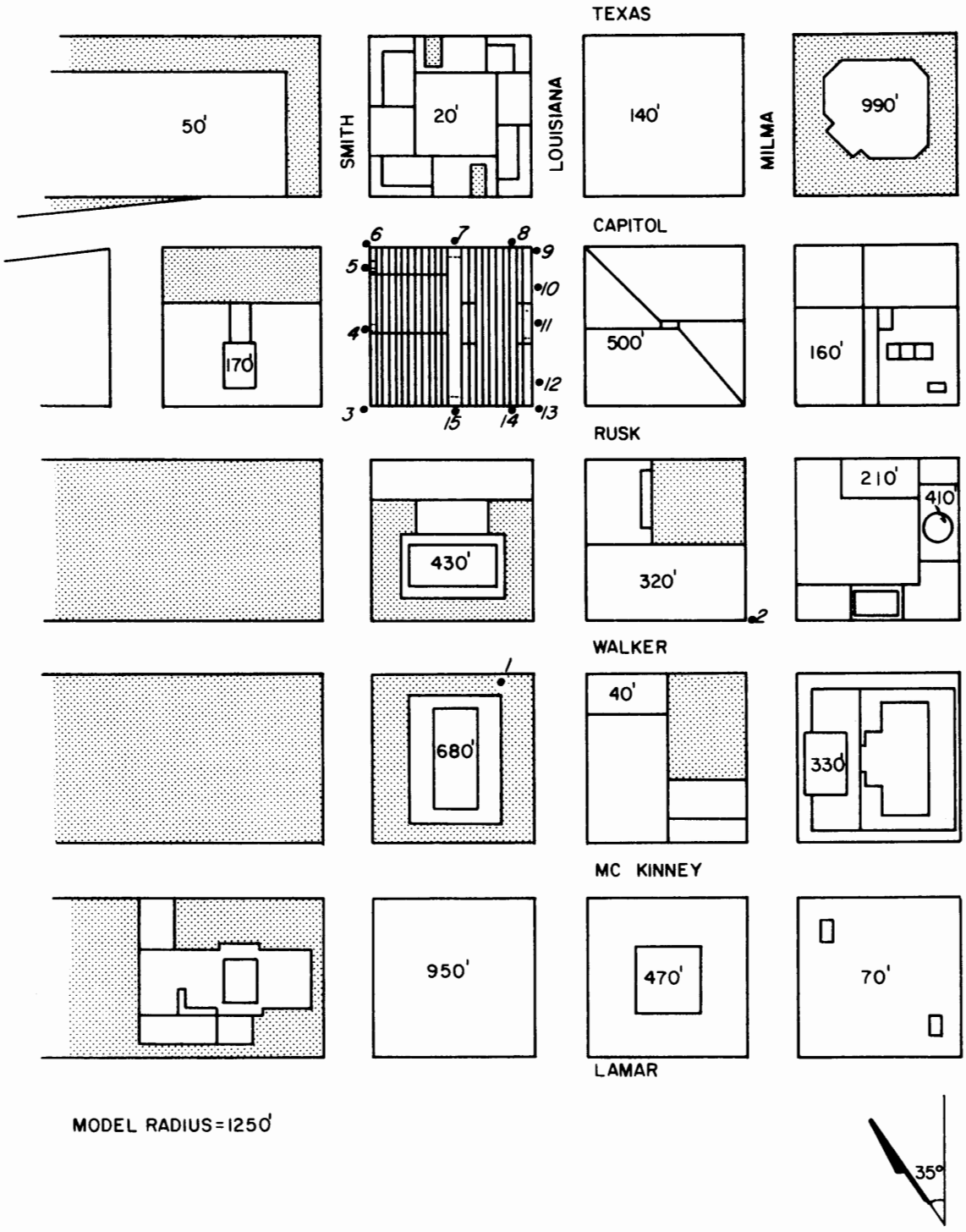

Figure 4. Building Location and Pedestrian Wind Velocity Measuring Positions

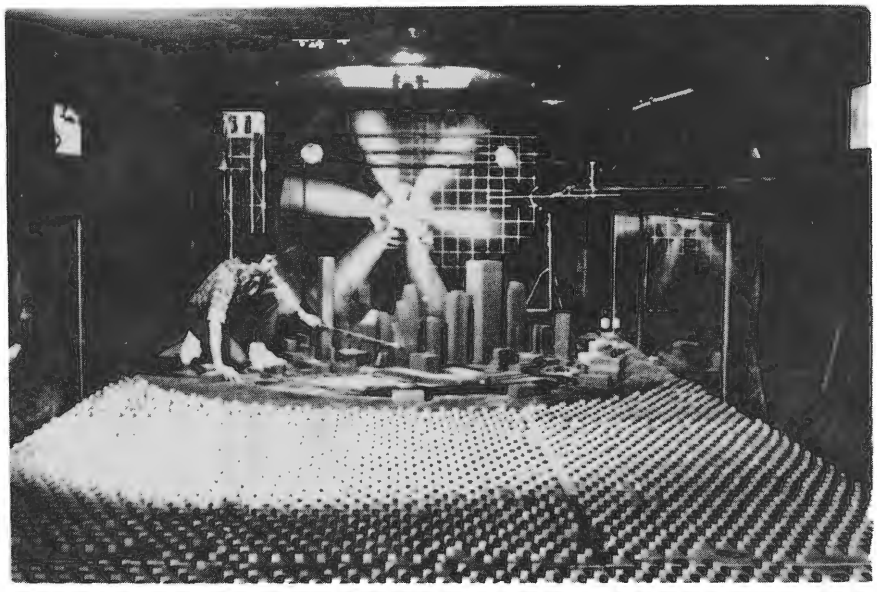

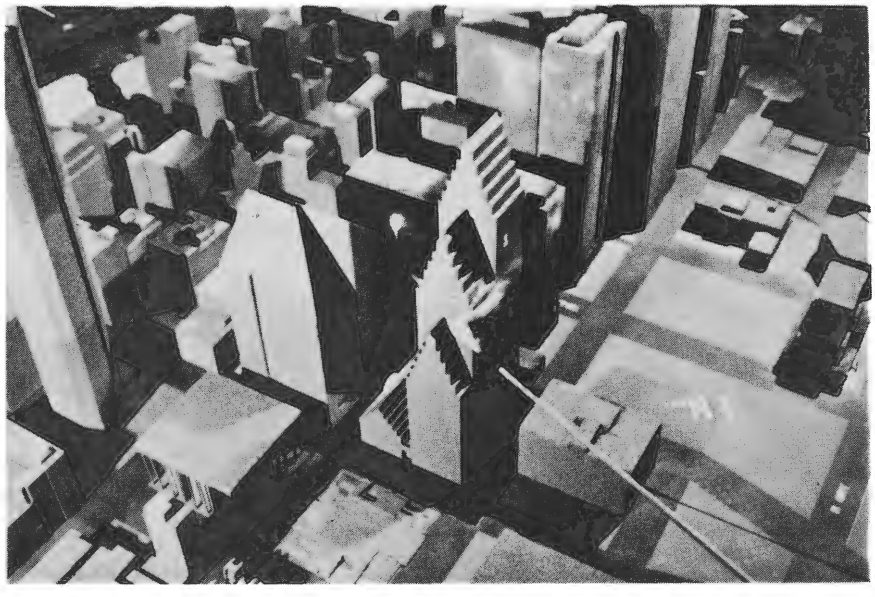

Figure 5. Completed Model in Wind Tunnel

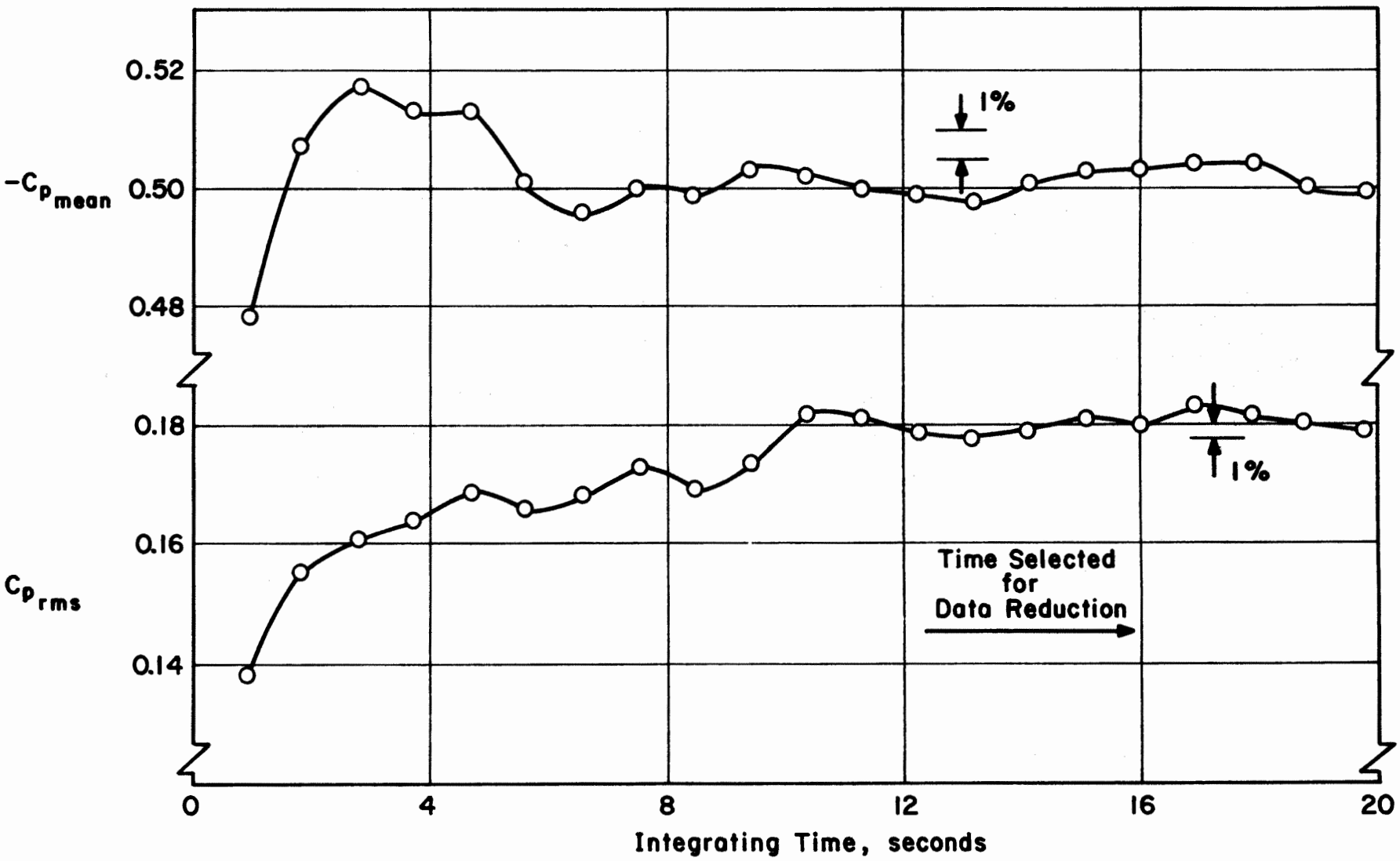

Figure 6- Data Sampling Time Verification

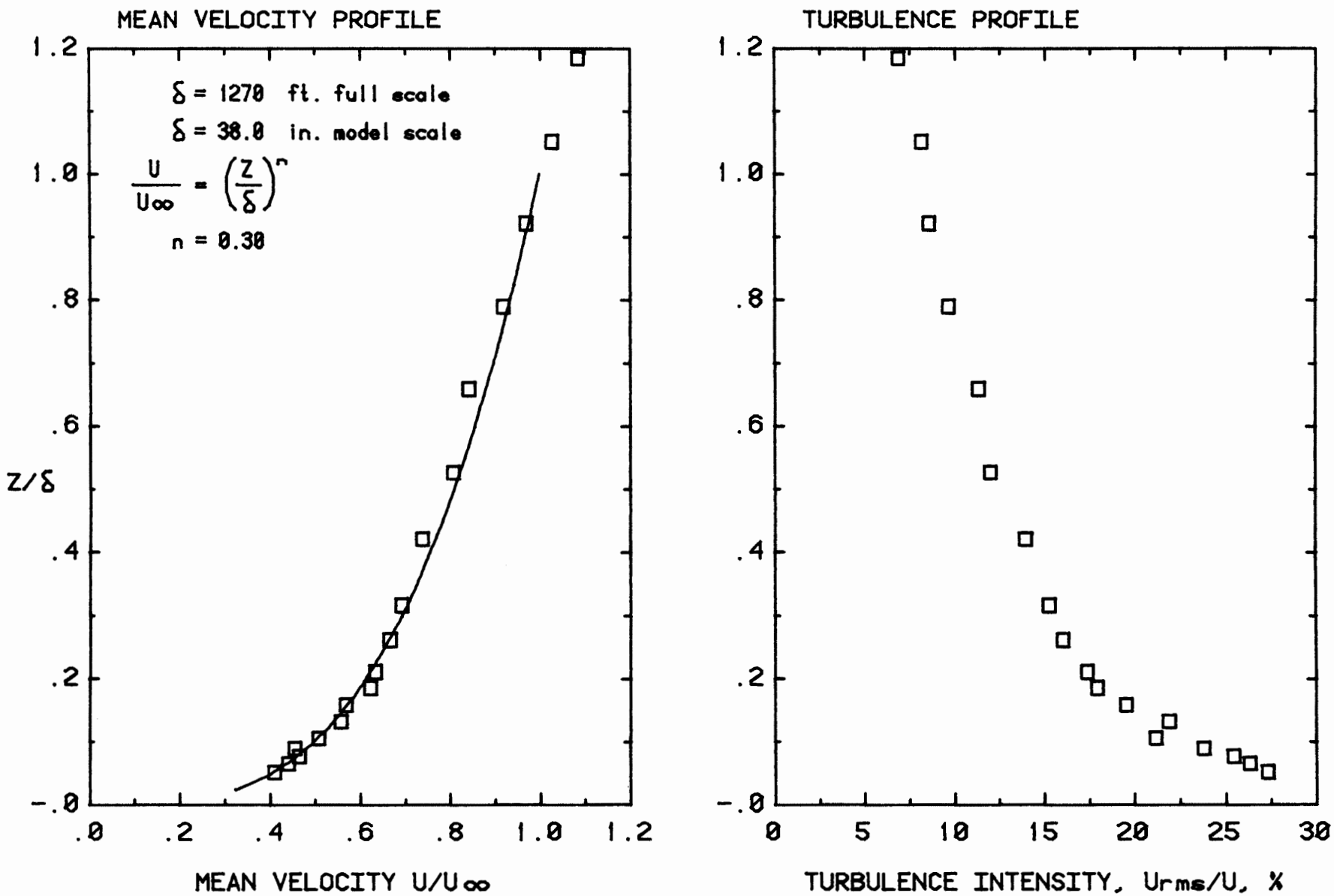

Figure 7. Mean Velocity and Turbulence Profiles Approaching the Model.

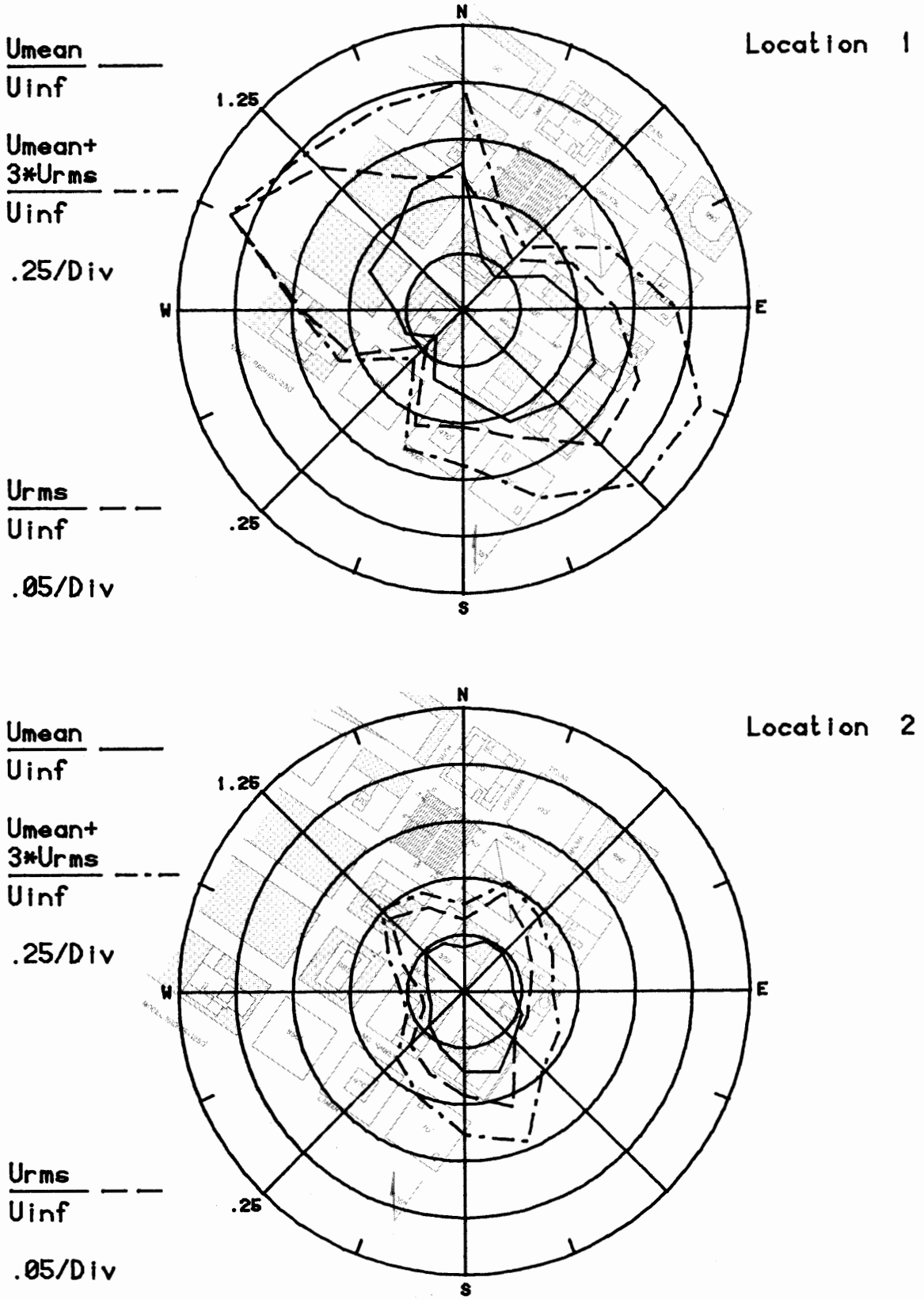

Figure 8a. Mean Velocities and Turbulence Intensities at Pedestrian Locations 1 and 2

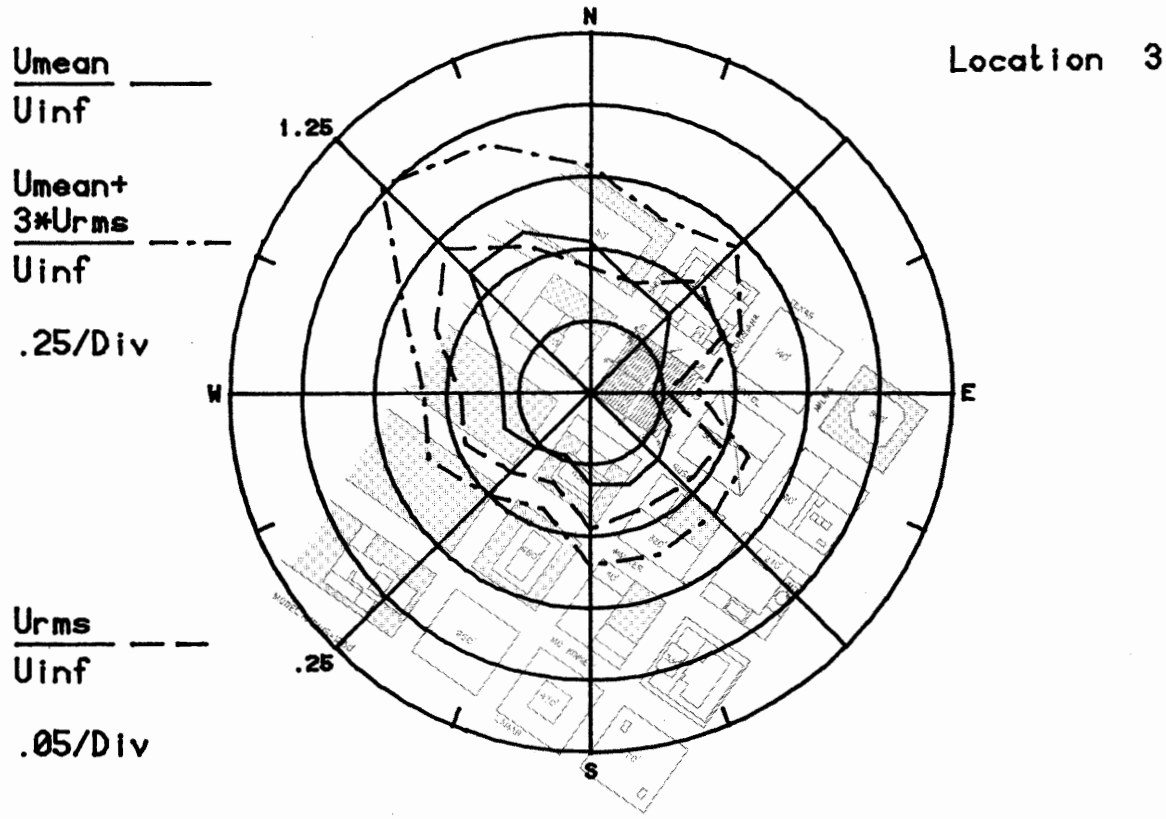

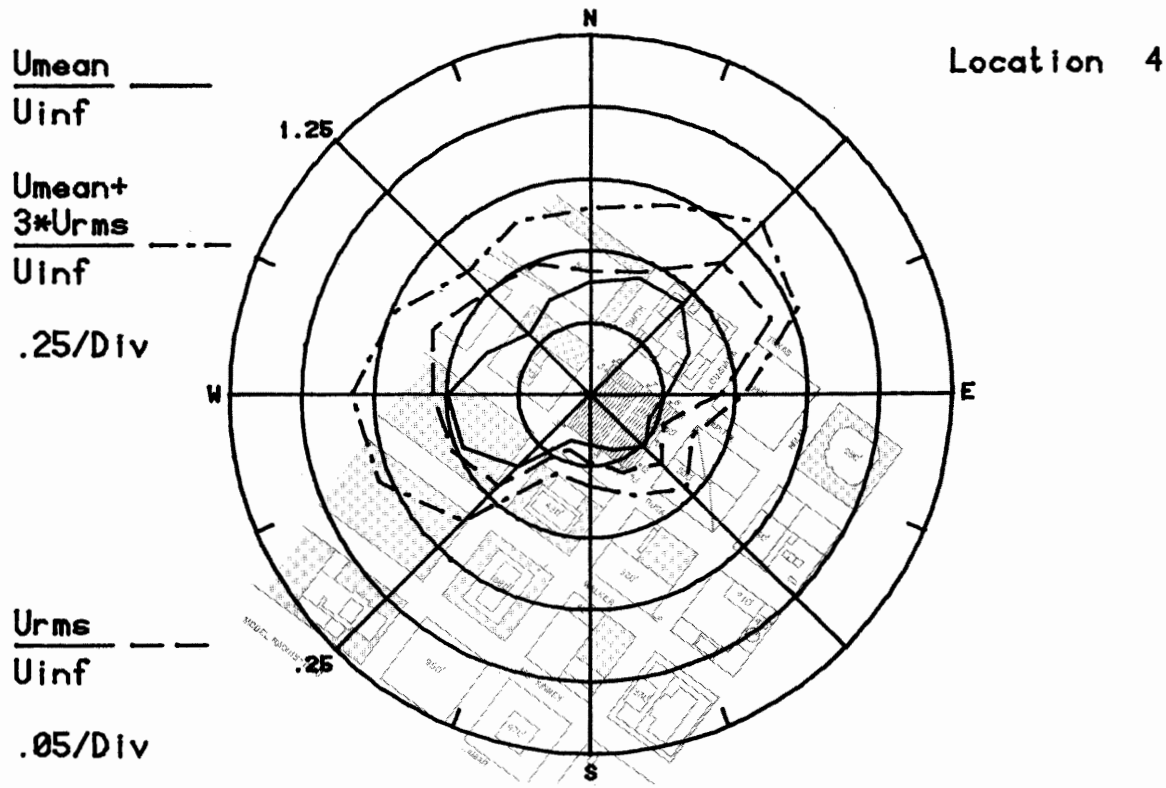

Figure 8b. Mean Velocities and Turbulence Intensities at Pedestrian Locations 3 and 4

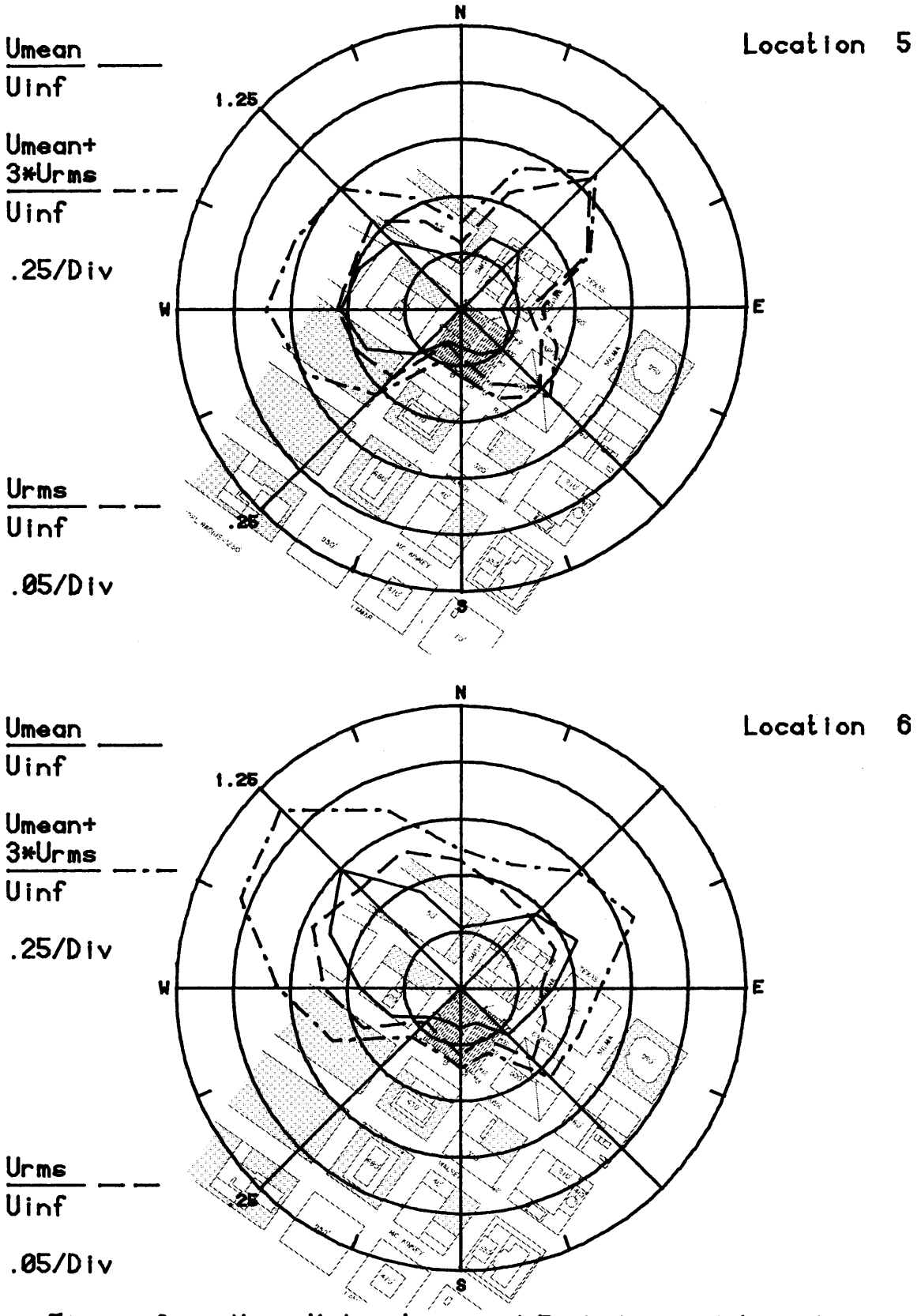

Figure 8c. Mean Velocities and Turbulence Intensities at Pedestrian Locations 5 and 6

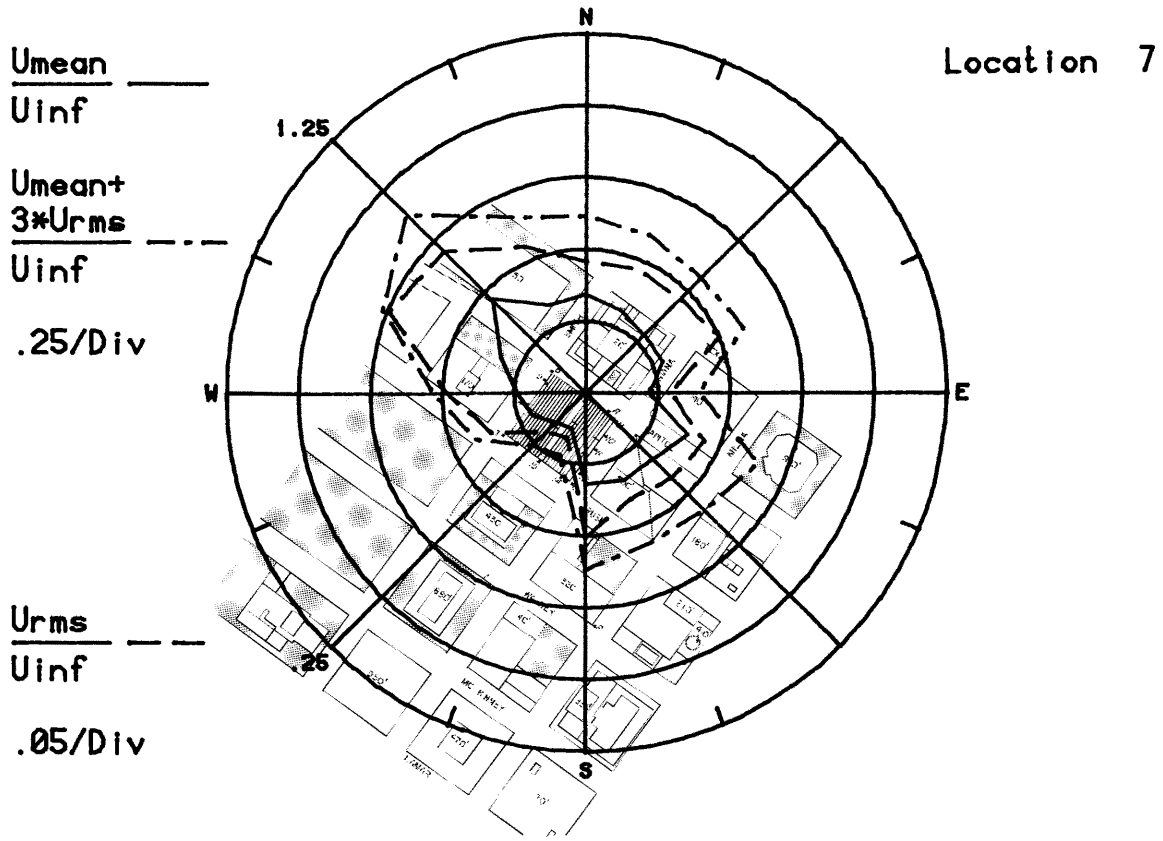

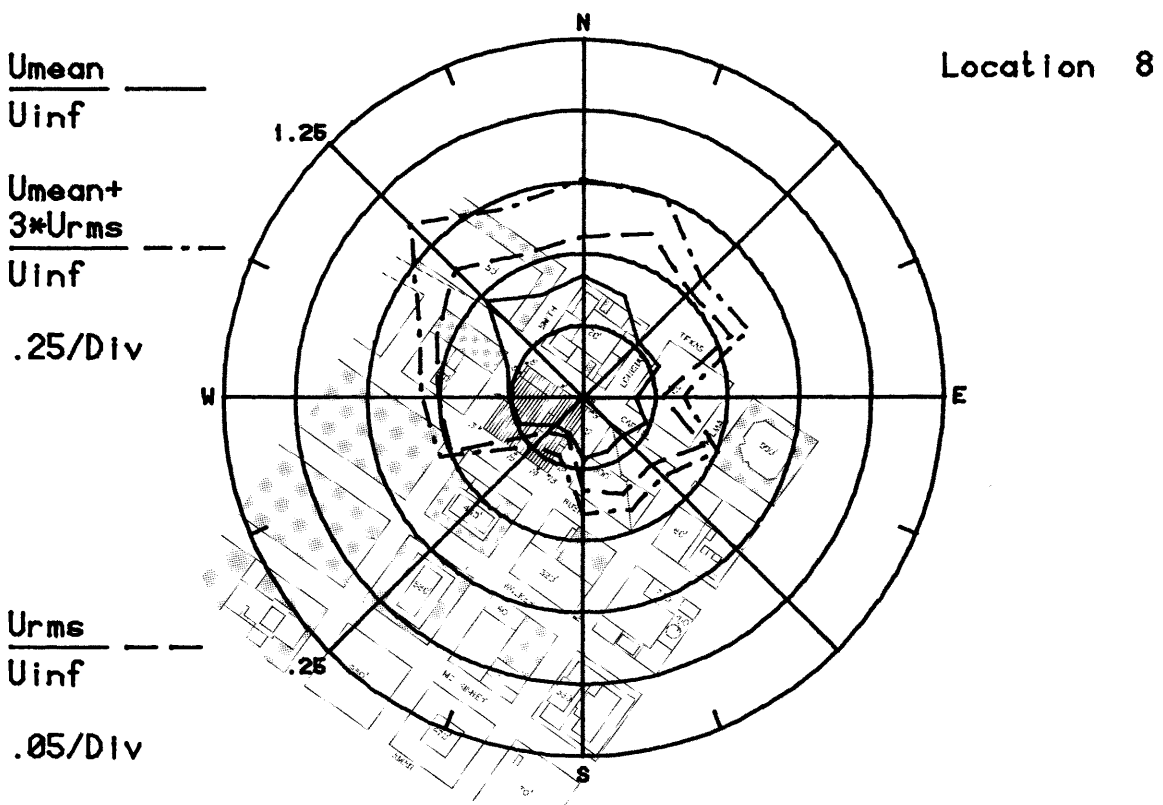

Figure 8d. Mean Velocities and Turbulence Intensities at Pedestrian Locations 7 and 8

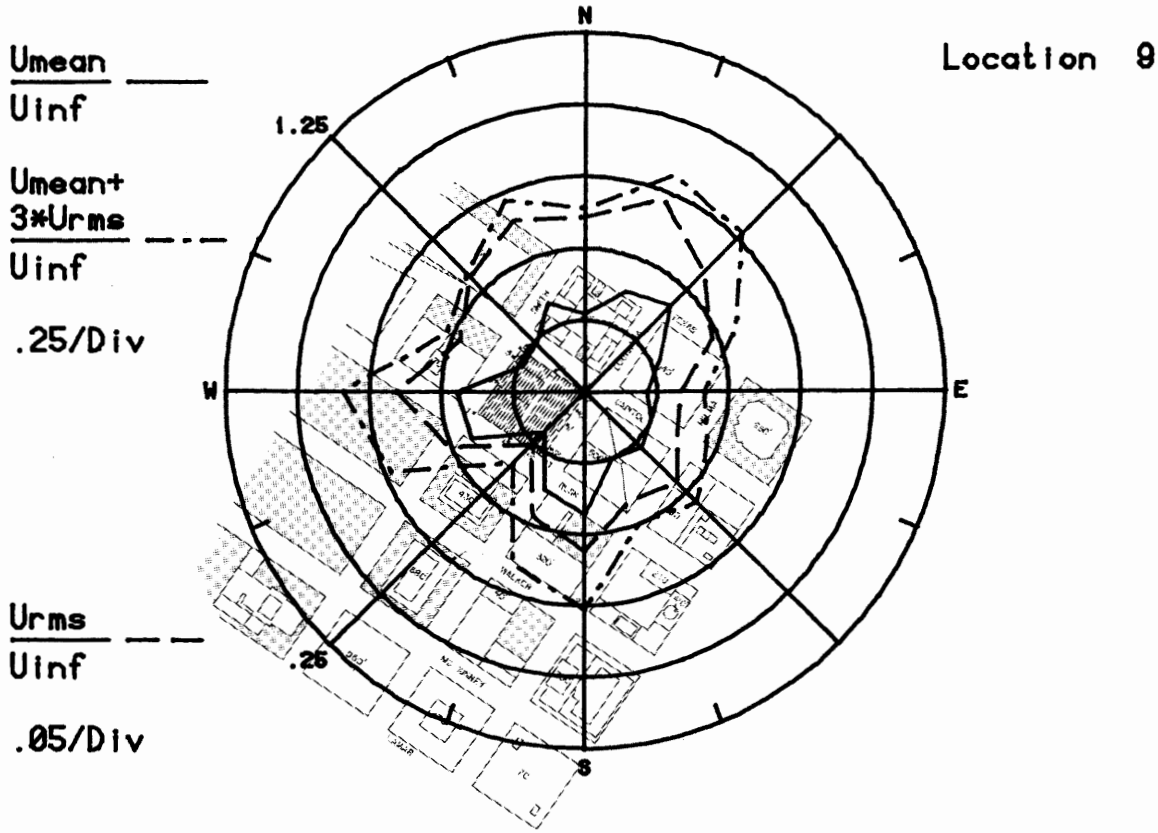

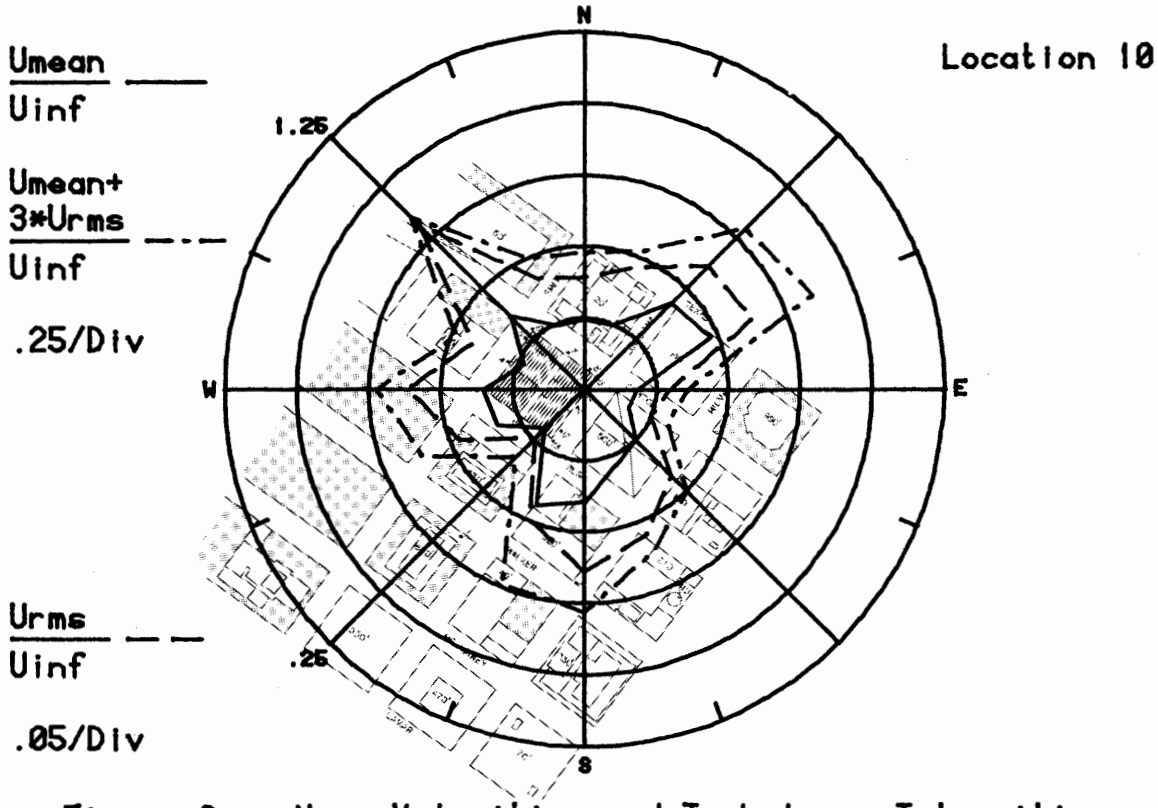

Figure 8e. Mean Velocities and Turbulence Intensities at Pedestrian Locations 9 and 10

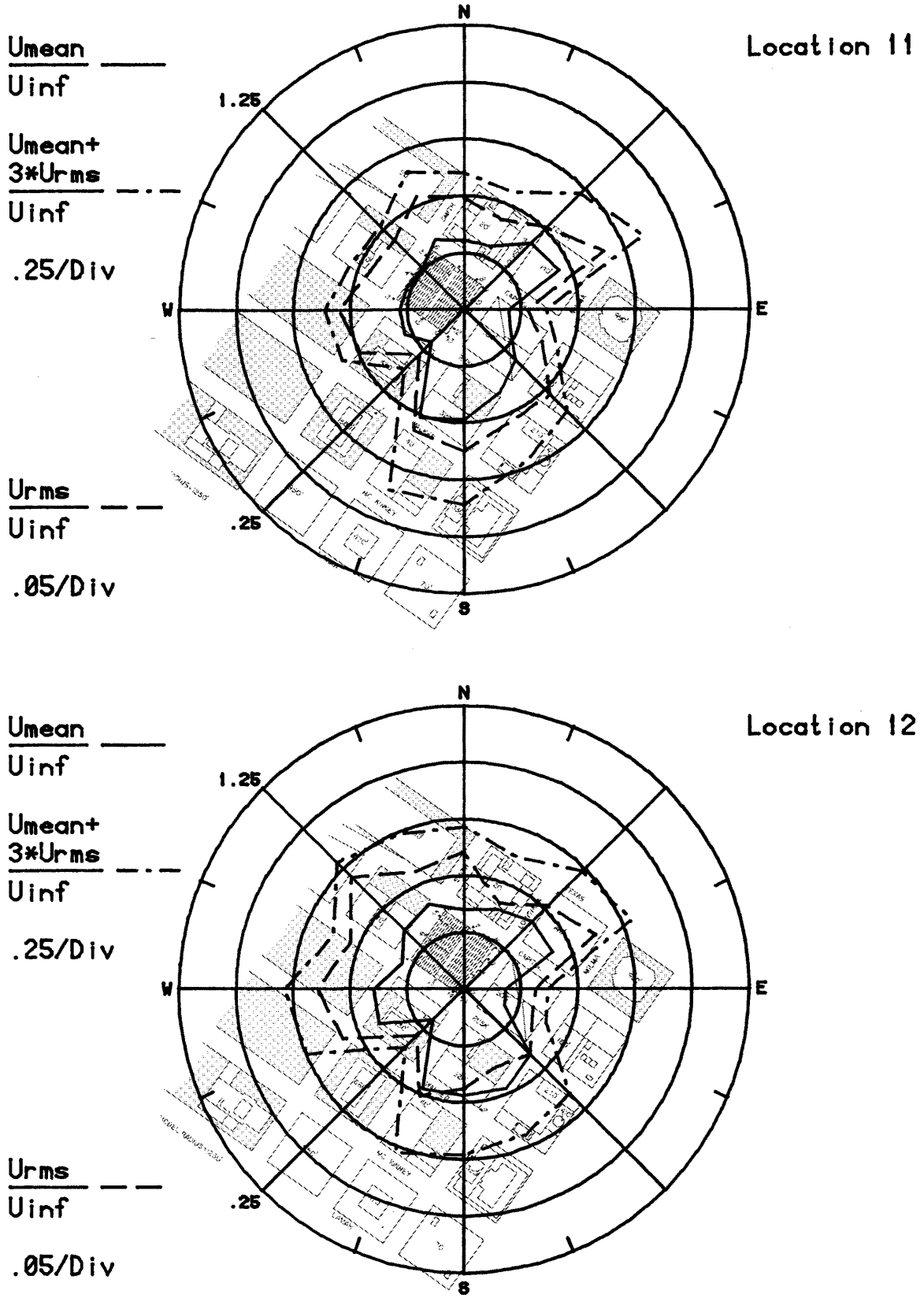

Figure 8f. Mean Velocities and Turbulence Intensities at Pedestrian Locations 11 and 12

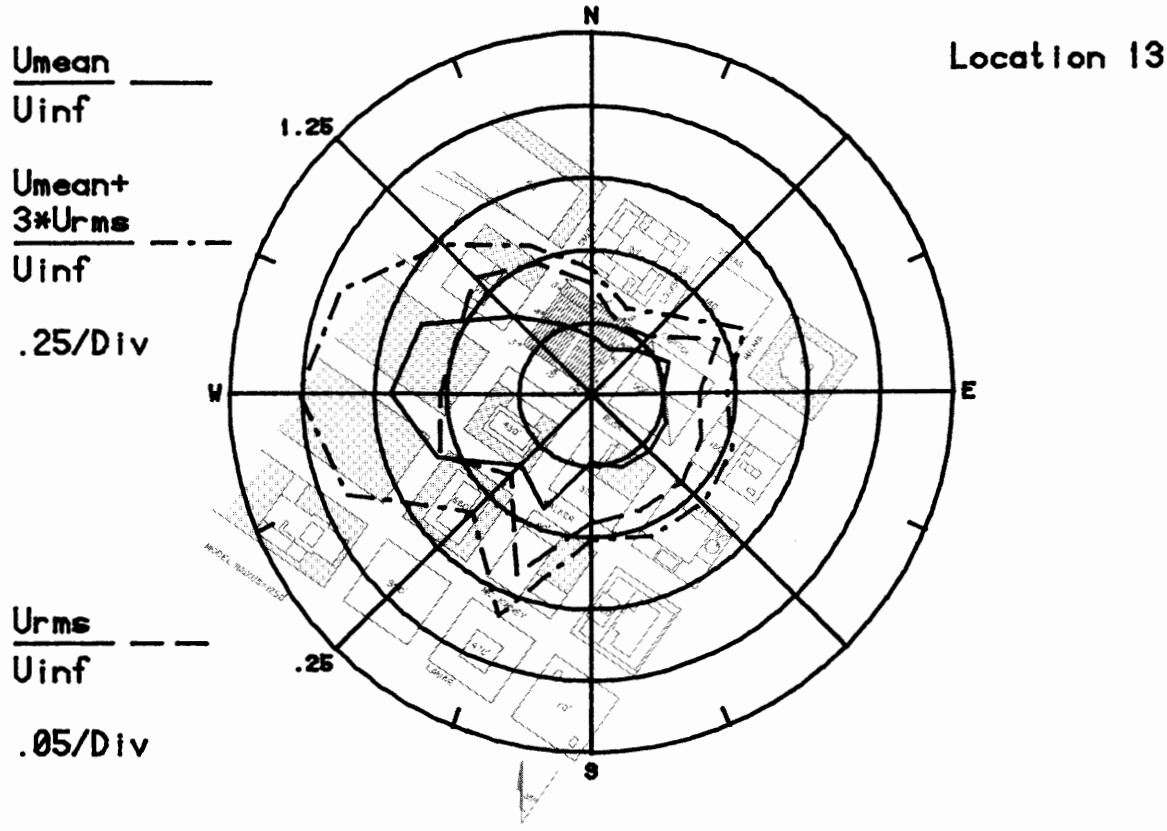

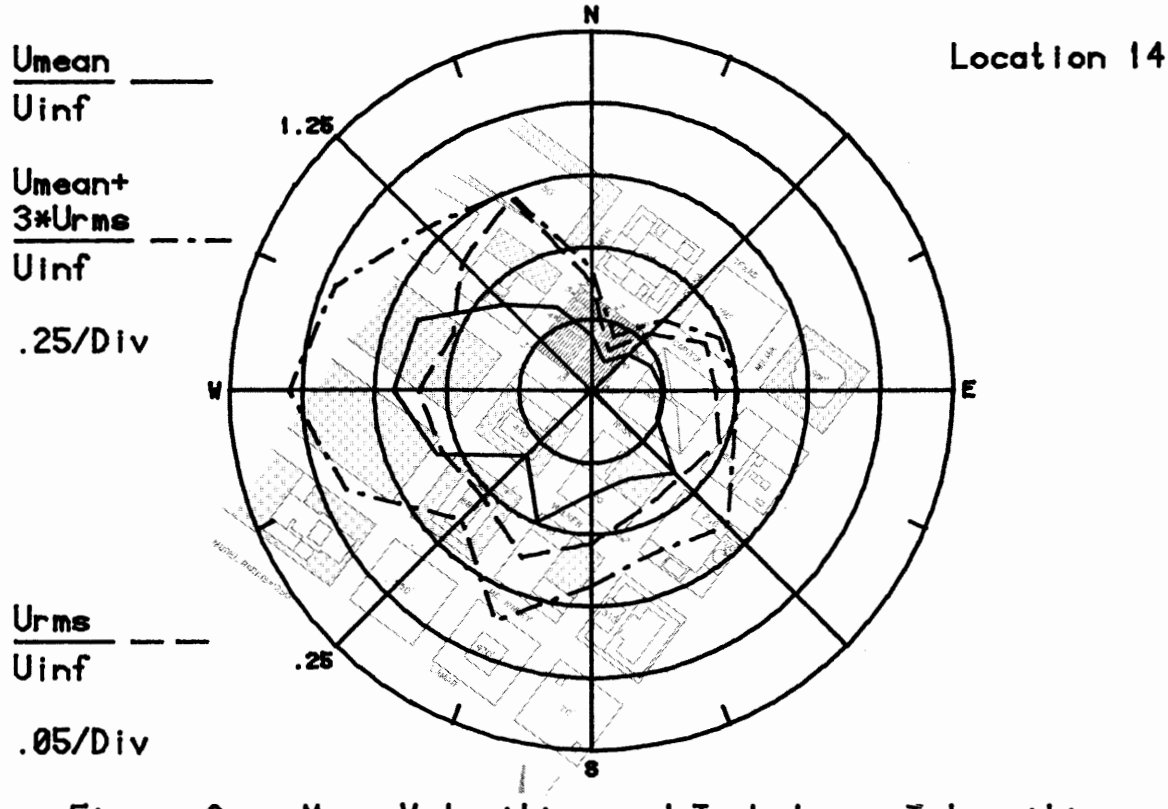

Figure 8g. Mean Velocities and Turbulence Intensities at Pedestrian Locations 13 and 14

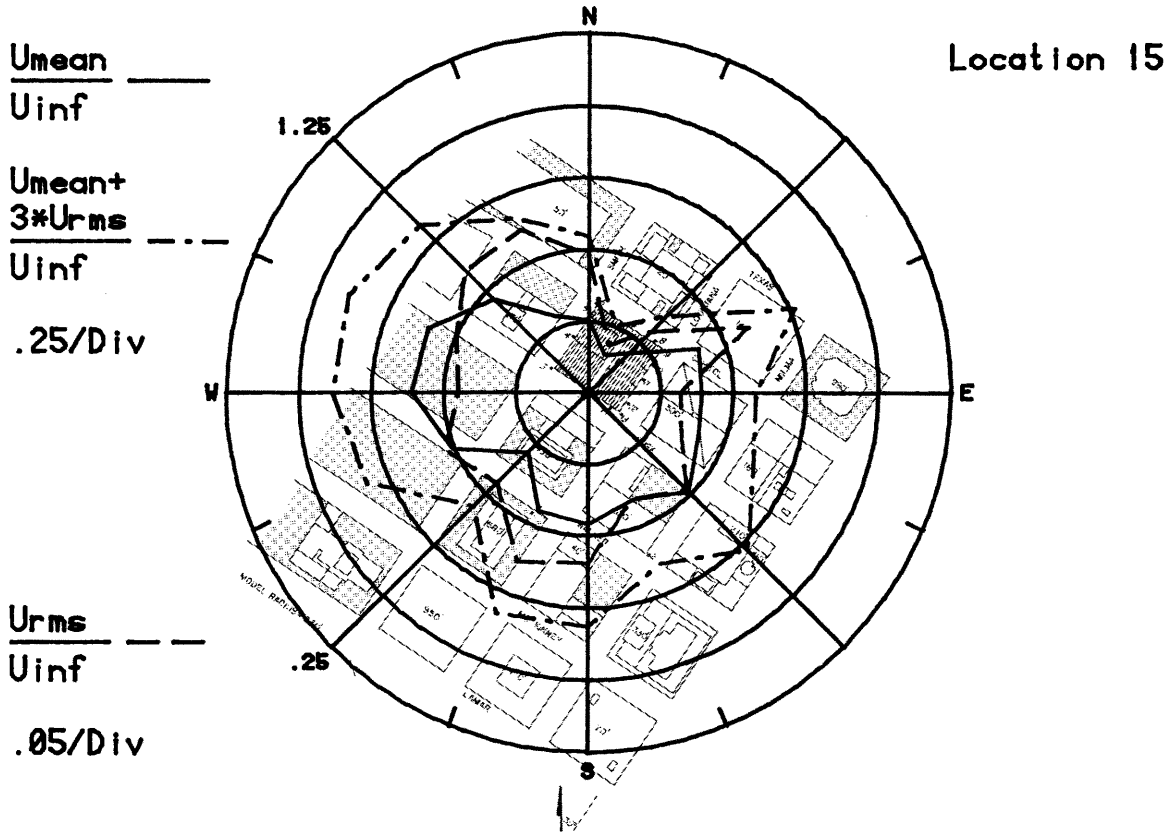

Figure 8h. Mean Velocities and Turbulence Intensities at Pedestrian Location 15

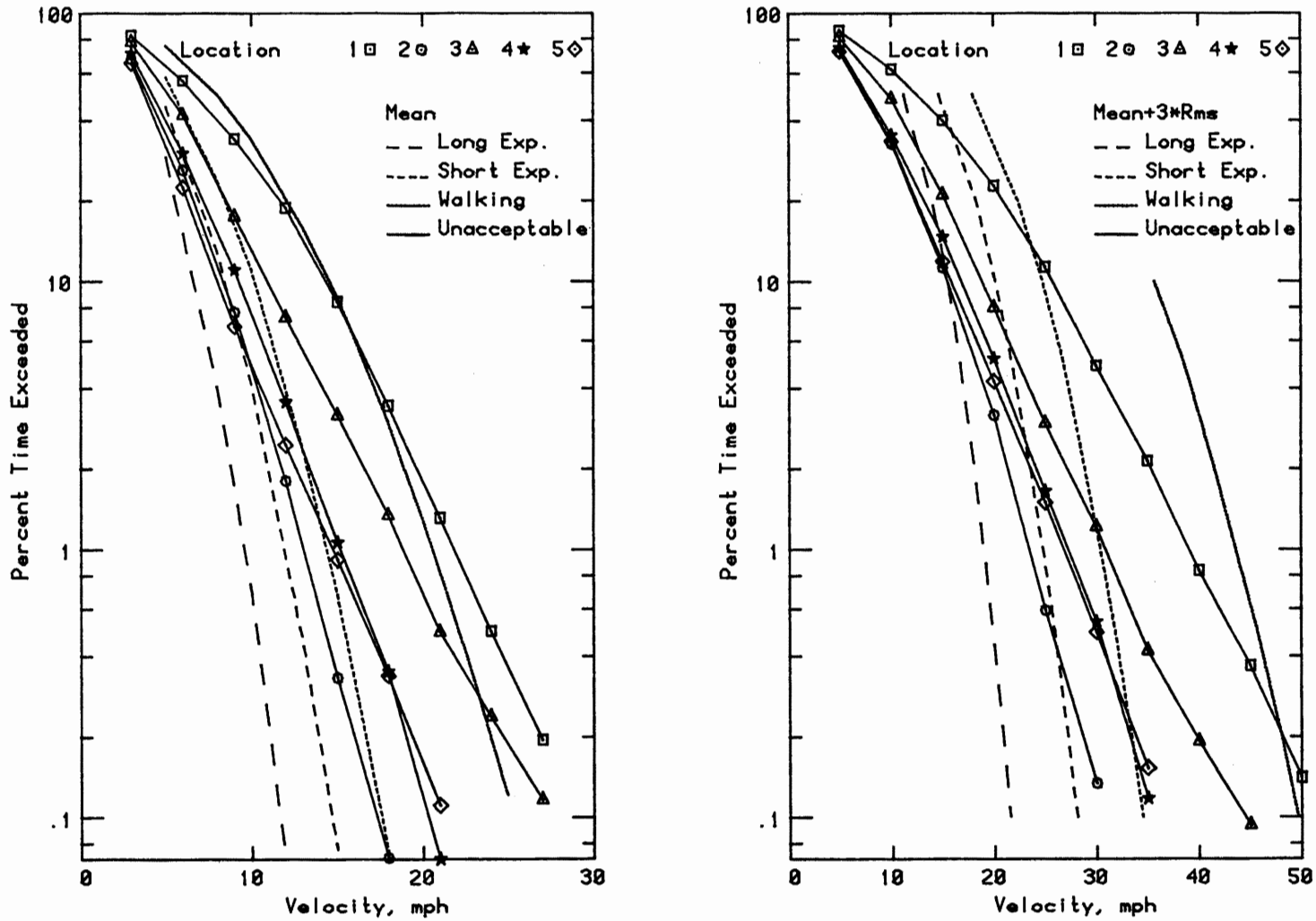

Figure 9a. Wind Velocity Probabilities for Pedestrian Locations

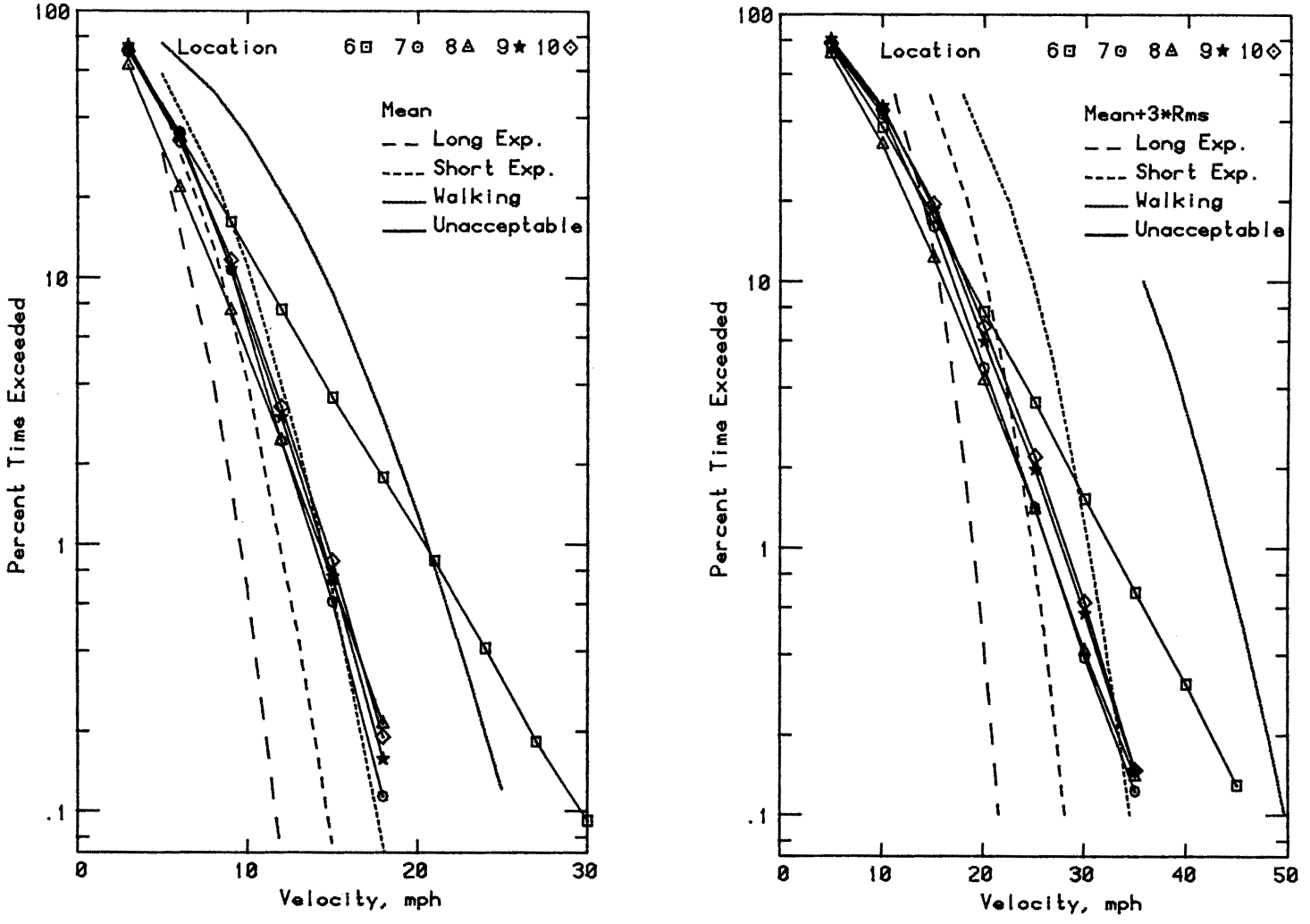

Figure 9b. Wind Velocity Probabilities for Pedestrian Locations

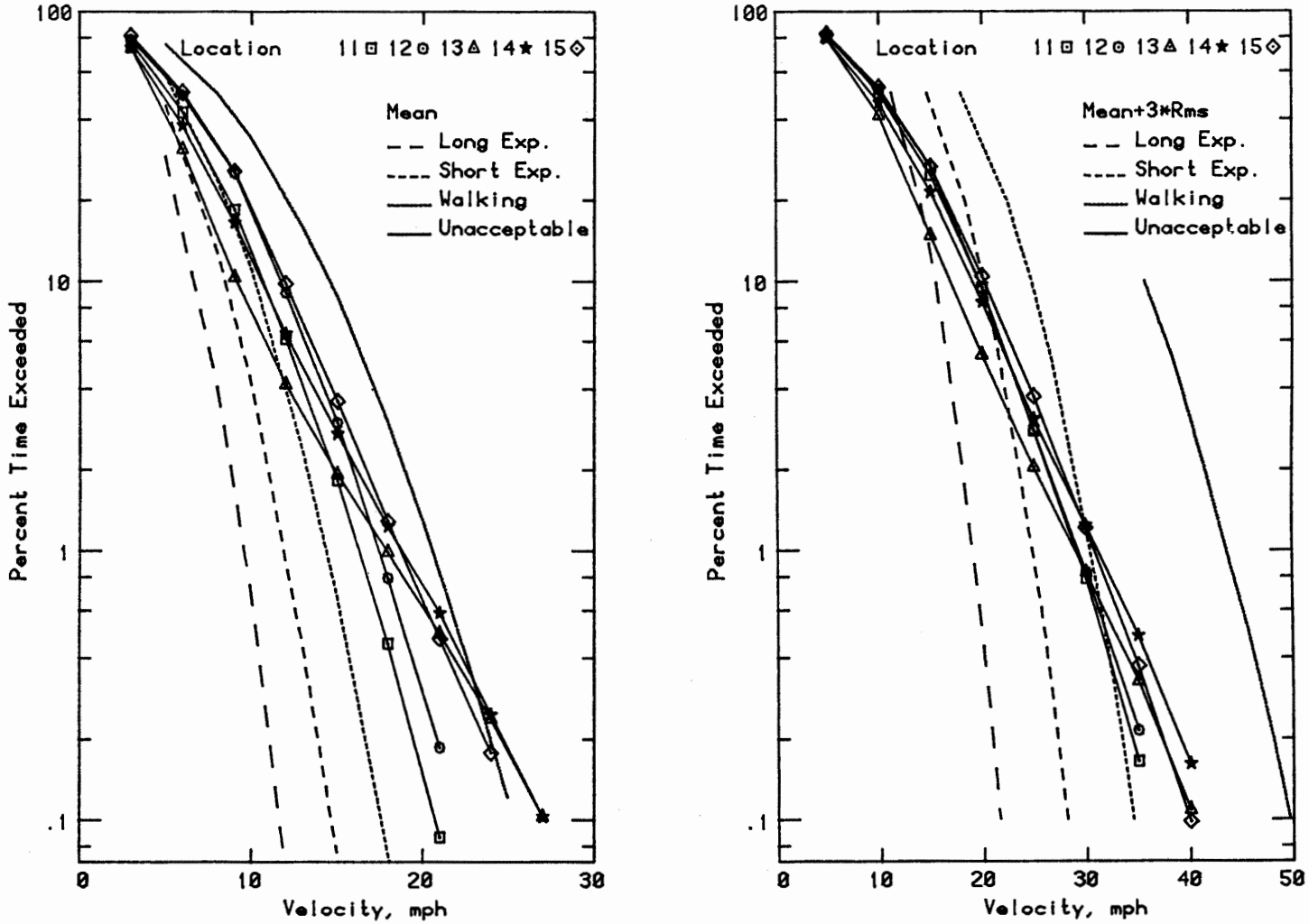

Figure 9c. Wind Velocity Probabilities for Pedestrian Locations

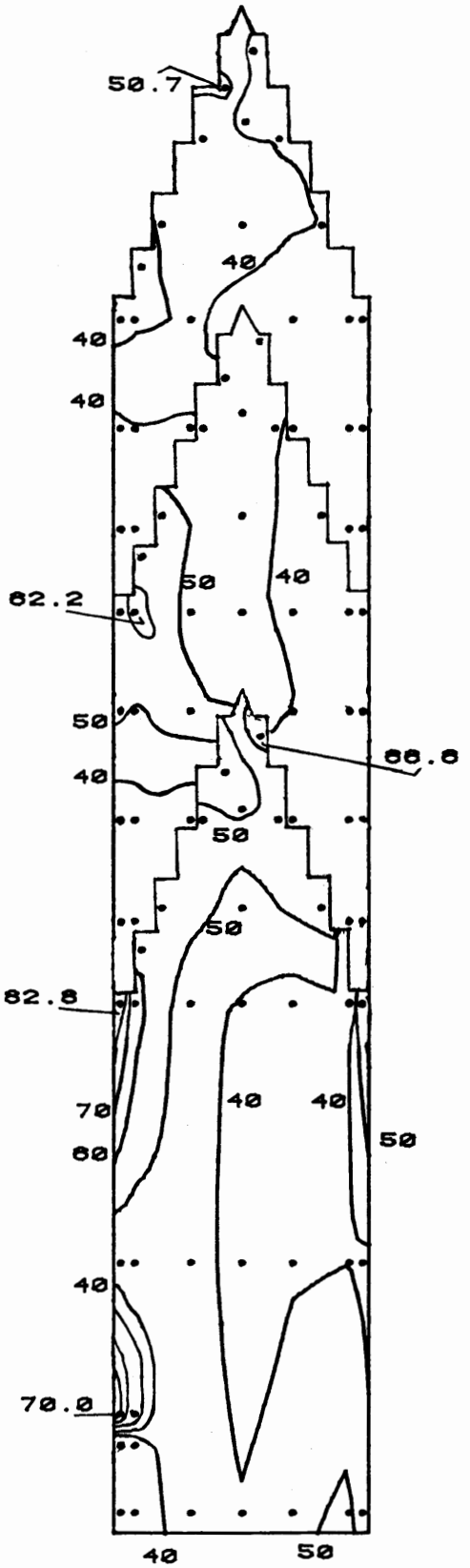

NORTH ELEVATION
PEAK CLADDING LOADS (PSF)
REFERENCE PRESSURE = 30 PSF

Figure 10a. Peak-Pressure Contours on the Building for Cladding Loads

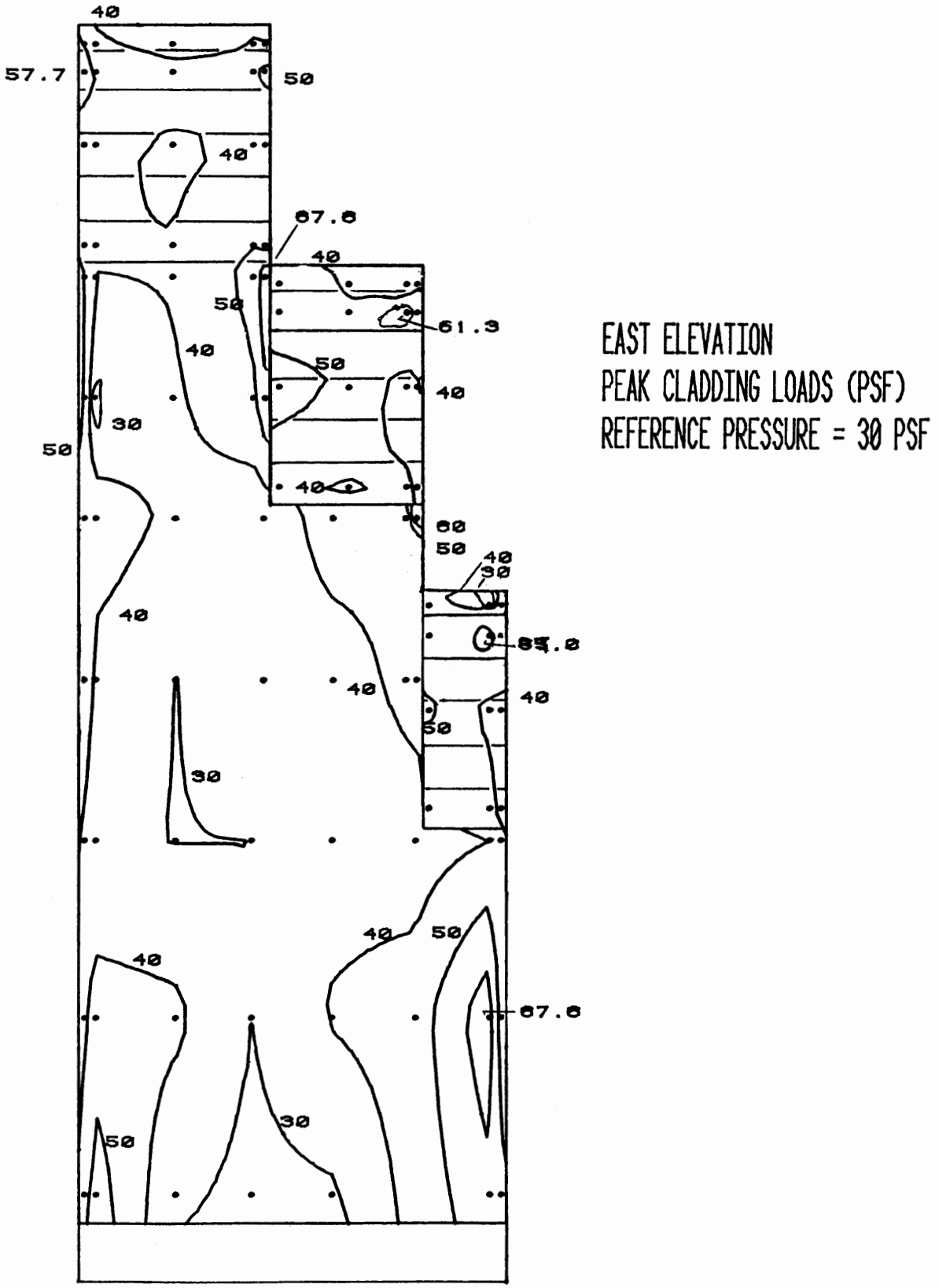

Figure 10b. Peak-Pressure Contours on the Building for Cladding Loads

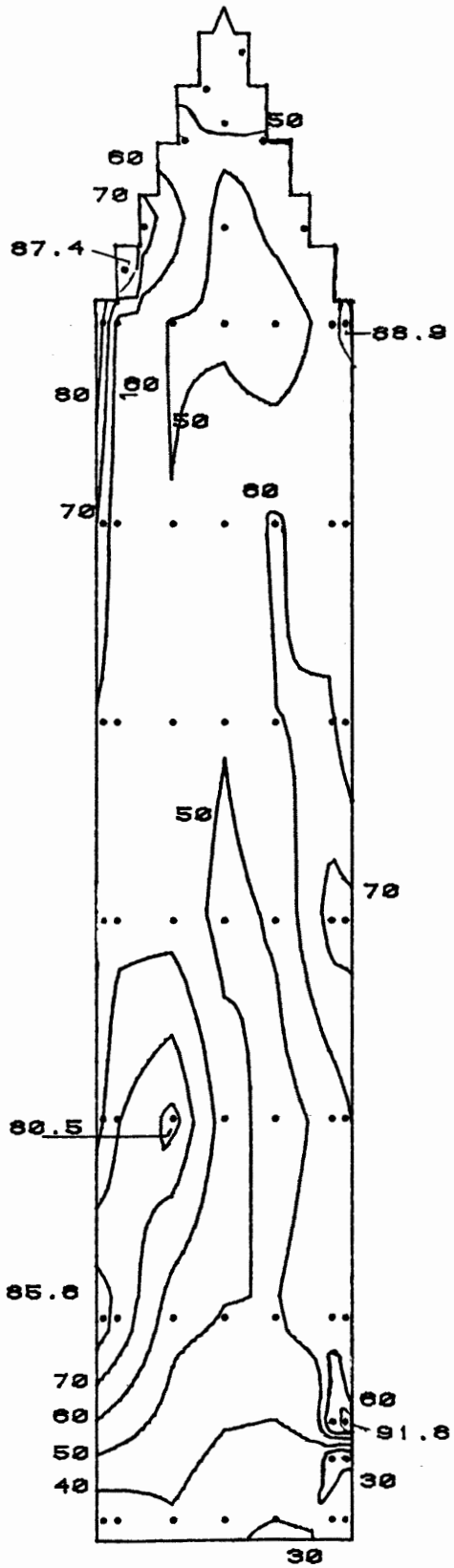

SOUTH ELEVATION
PEAK CLADDING LOADS (PSF)
REFERENCE PRESSURE = 30 PSF

Figure 10c. Peak-Pressure Contours on the Building for Cladding Loads

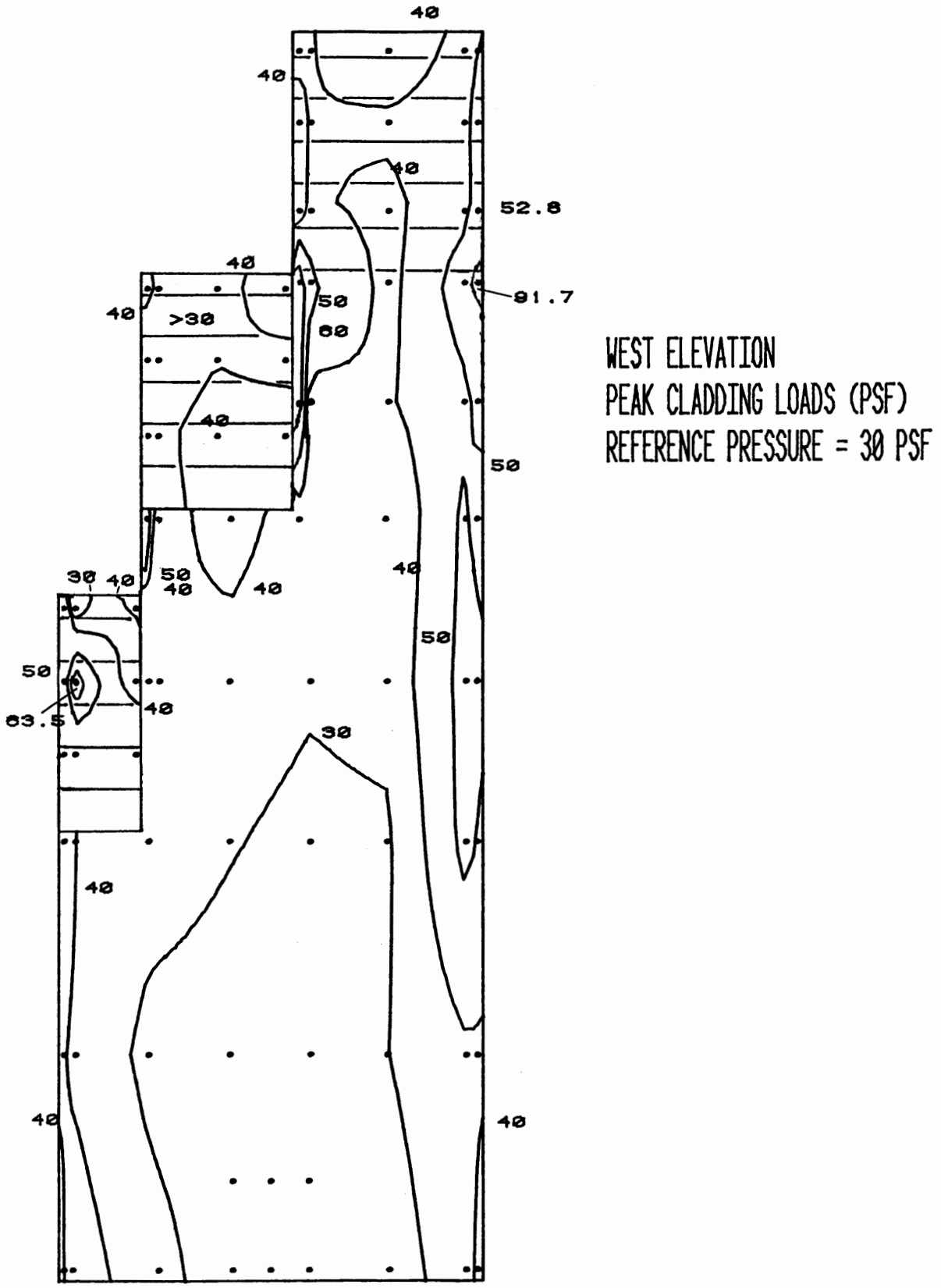

Figure 10d. Peak-Pressure Contours on the Building for Cladding Loads

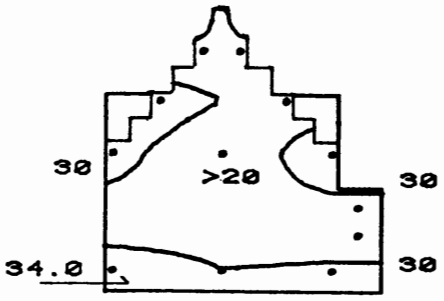

NORTH ELEVATION

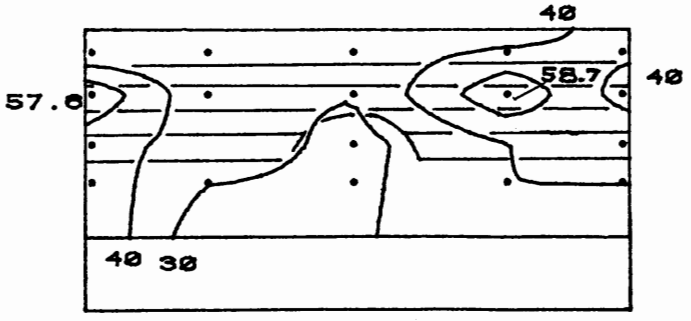

WEST ELEVATION
PEAK CLADDING LOADS (PSF)
REFERENCE PRESSURE = 30 PSF

Figure 10e. Peak-Pressure Contours on the Building for Cladding Loads

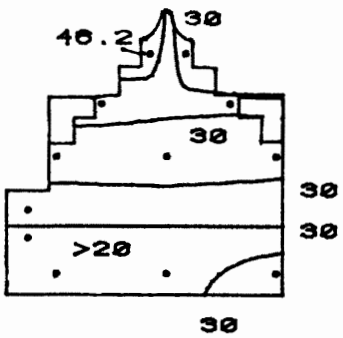

SOUTH ELEVATION

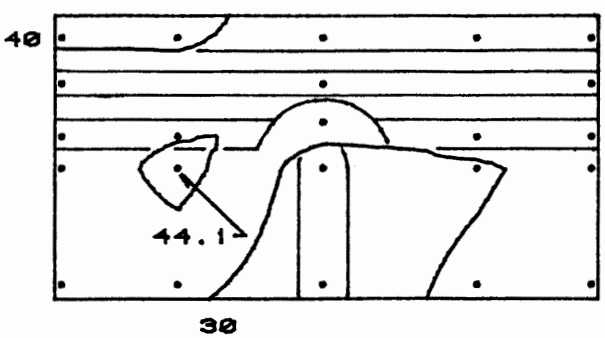

EAST ELEVATION
PEAK CLADDING LOADS (PSF)
REFERENCE PRESSURE = 30 PSF

Figure 10f. Peak-Pressure Contours on the Building for Cladding Loads

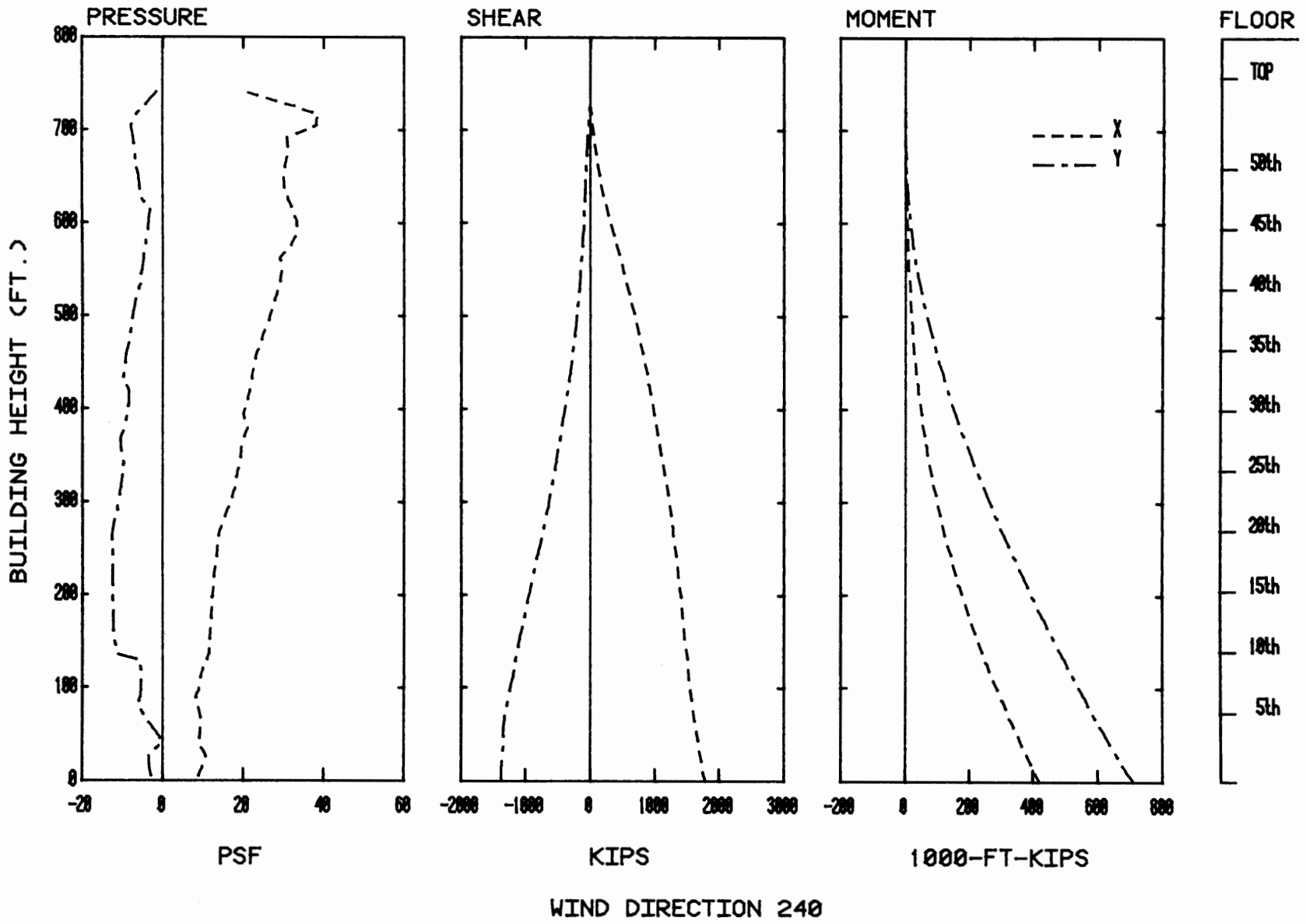

Figure 11. Load, Shear, and Moment Diagrams for Selected Wind Directions

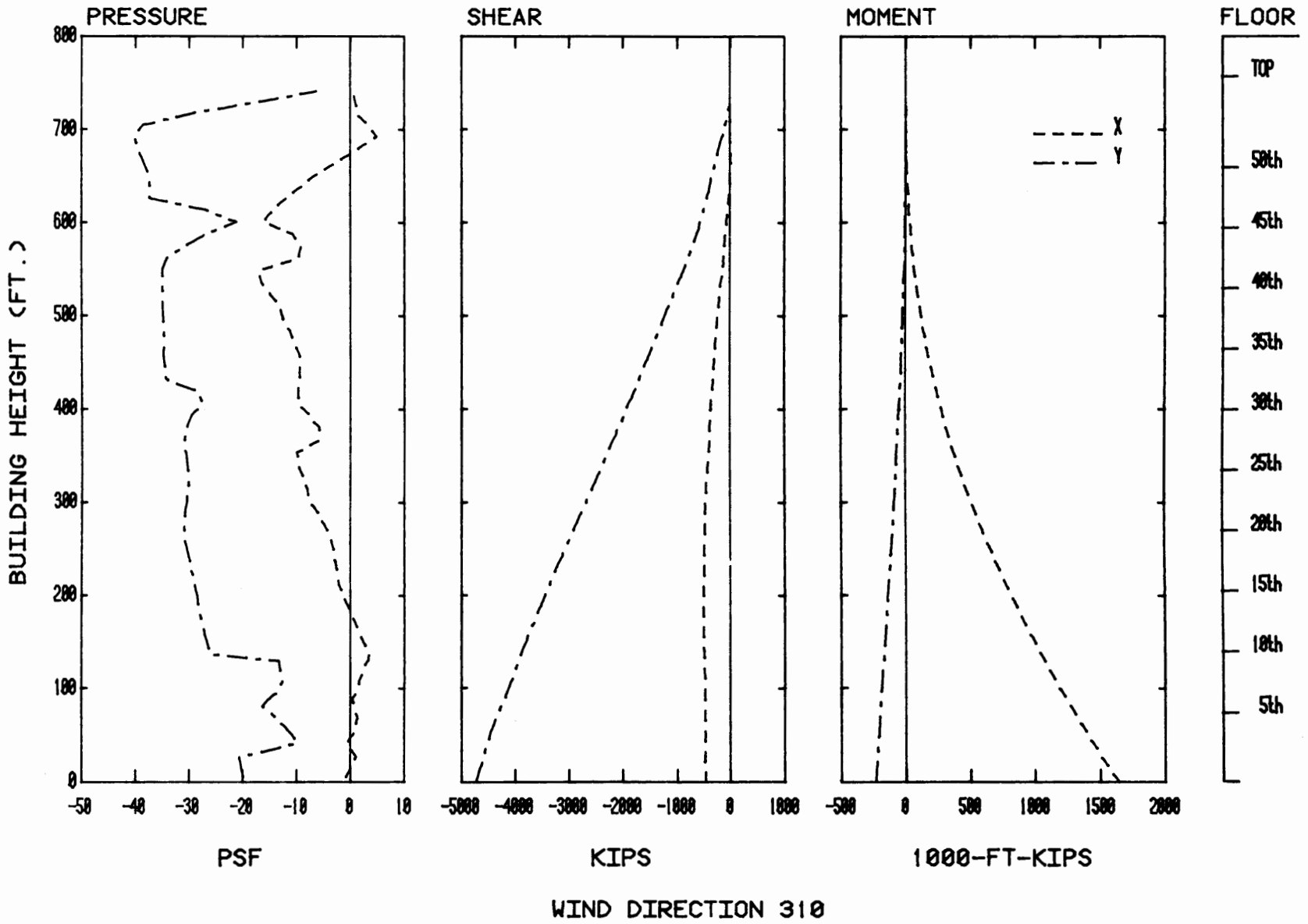

Figure 11. Load, Shear, and Moment Diagrams for Selected Wind Directions

TABLES

TABLE 1

MOTION PICTURE SCENE GUIDE

Run #	Approach Wind Azimuth, degrees
1	0
2	45
3	90
4	135
5	180
6	225
7	270
8	315

TABLE 2--PEDESTRIAN WIND VELOCITIES AND TURBULENCE INTENSITIES

HOUSTON NATIONAL BANK

LOCATION 1

WIND AZIMUTH	UMEAN/UINF (PERCENT)	URMS/UINF (PERCENT)	UMEAN+3*URMS/UINF (PERCENT)
0.00	64.5	11.7	99.7
22.50	23.1	7.9	46.9
45.00	20.3	6.2	38.8
67.50	38.4	10.4	69.6
90.00	53.1	13.4	93.3
112.50	62.6	16.7	112.6
135.00	58.5	17.0	109.6
157.50	53.5	12.2	90.2
180.00	37.5	10.3	68.6
202.50	33.0	11.0	66.1
225.00	16.5	4.5	30.0
247.50	27.2	10.4	58.3
270.00	29.6	14.2	72.1
292.50	44.4	22.0	110.4
315.00	43.8	17.7	96.9
337.50	57.6	12.6	95.3

LOCATION 2

WIND AZIMUTH	UMEAN/UINF (PERCENT)	URMS/UINF (PERCENT)	UMEAN+3*URMS/UINF (PERCENT)
0.00	19.5	6.3	38.5
22.50	24.0	9.3	51.9
45.00	23.8	7.5	46.5
67.50	22.5	6.5	42.0
90.00	21.5	5.8	38.9
112.50	27.3	5.9	45.1
135.00	29.9	6.1	48.4
157.50	38.7	11.1	72.0
180.00	35.6	9.2	63.3
202.50	27.4	7.9	51.1
225.00	21.8	6.7	42.0
247.50	15.5	3.8	26.8
270.00	16.0	3.9	27.6
292.50	18.1	5.7	35.3
315.00	23.7	9.1	51.1
337.50	22.8	8.0	46.8

LOCATION 3

WIND AZIMUTH	UMEAN/UINF (PERCENT)	URMS/UINF (PERCENT)	UMEAN+3*URMS/UINF (PERCENT)
0.00	52.4	8.7	78.5
22.50	40.3	8.2	64.9
45.00	38.7	10.9	71.3
67.50	26.8	9.8	56.4
90.00	21.2	5.3	37.0
112.50	29.6	9.7	58.7
135.00	32.8	9.2	60.2
157.50	34.5	8.9	61.1
180.00	31.6	9.5	60.1
202.50	23.2	6.8	43.5
225.00	26.9	7.7	50.2
247.50	32.4	9.4	60.6
270.00	30.7	9.1	57.9
292.50	34.8	11.6	69.6
315.00	59.4	14.2	101.9
337.50	60.3	11.0	93.1

LOCATION 4

WIND AZIMUTH	UMEAN/UINF (PERCENT)	URMS/UINF (PERCENT)	UMEAN+3*URMS/UINF (PERCENT)
0.00	38.9	8.6	64.6
22.50	43.7	9.1	71.1
45.00	45.0	12.9	83.8
67.50	37.0	13.5	77.6
90.00	26.2	9.1	53.3
112.50	21.7	5.4	38.0
135.00	25.9	6.9	46.7
157.50	20.8	5.9	38.5
180.00	17.8	4.8	32.1
202.50	17.4	4.2	29.9
225.00	35.7	9.0	62.7
247.50	48.2	10.4	79.2
270.00	49.7	10.9	82.5
292.50	38.5	11.8	74.0
315.00	29.9	10.1	60.2
337.50	35.9	9.8	65.3

TABLE 2--PEDESTRIAN WIND VELOCITIES AND TURBULENCE INTENSITIES

HOUSTON NATIONAL BANK

LOCATION 5

WIND AZIMUTH	UMEAN/UINF (PERCENT)	URMS/UINF (PERCENT)	UMEAN+3*URMS/UINF (PERCENT)
0.00	29.7	5.9	38.3
22.50	33.9	11.1	67.1
45.00	35.5	16.1	83.8
67.50	25.7	12.0	61.6
90.00	17.6	5.9	35.3
112.50	22.7	7.6	45.5
135.00	25.3	9.8	54.7
157.50	21.6	7.2	43.1
180.00	16.8	4.3	29.7
202.50	15.4	3.3	25.3
225.00	27.6	8.4	52.9
247.50	45.1	9.8	74.5
270.00	53.2	10.9	85.8
292.50	48.2	10.3	79.0
315.00	42.1	11.0	75.2
337.50	27.7	8.4	53.0

LOCATION 6

WIND AZIMUTH	UMEAN/UINF (PERCENT)	URMS/UINF (PERCENT)	UMEAN+3*URMS/UINF (PERCENT)
0.00	27.1	11.3	61.1
22.50	30.9	9.4	59.0
45.00	46.2	8.8	72.6
67.50	55.3	9.0	82.2
90.00	40.3	7.0	61.2
112.50	31.8	8.0	55.8
135.00	29.0	8.9	55.6
157.50	16.8	4.8	31.1
180.00	17.6	5.9	35.4
202.50	15.8	4.7	29.8
225.00	18.2	4.2	30.9
247.50	33.0	9.3	60.7
270.00	44.3	12.0	80.3
292.50	62.5	14.1	104.8
315.00	74.1	12.5	111.6
337.50	46.2	13.1	85.5

LOCATION 7

WIND AZIMUTH	UMEAN/UINF (PERCENT)	URMS/UINF (PERCENT)	UMEAN+3*URMS/UINF (PERCENT)
0.00	34.1	9.1	61.4
22.50	31.2	9.3	59.0
45.00	28.6	9.2	56.3
67.50	29.0	10.0	59.1
90.00	21.7	5.8	39.3
112.50	38.2	8.9	64.9
135.00	32.6	8.5	58.0
157.50	33.1	8.1	57.3
180.00	31.7	10.1	61.9
202.50	13.4	3.4	23.6
225.00	14.3	3.8	25.8
247.50	20.4	7.1	41.9
270.00	24.0	9.6	52.9
292.50	32.2	14.8	76.6
315.00	46.2	13.9	88.0
337.50	33.2	11.0	66.1

LOCATION 8

WIND AZIMUTH	UMEAN/UINF (PERCENT)	URMS/UINF (PERCENT)	UMEAN+3*URMS/UINF (PERCENT)
0.00	42.4	11.2	76.0
22.50	38.2	12.4	75.3
45.00	26.9	10.4	58.2
67.50	28.6	11.1	62.0
90.00	18.3	5.5	34.8
112.50	23.7	9.0	50.8
135.00	19.2	6.7	39.2
157.50	20.7	7.3	42.6
180.00	21.4	6.6	41.0
202.50	13.4	3.0	22.3
225.00	13.7	3.5	24.2
247.50	24.1	10.0	54.0
270.00	26.1	10.1	56.2
292.50	28.5	11.0	61.5
315.00	47.6	12.6	85.5
337.50	38.6	10.8	71.0

TABLE 2--PEDESTRIAN WIND VELOCITIES AND TURBULENCE INTENSITIES

HOUSTON NATIONAL BANK

LOCATION 9

WIND AZIMUTH	UMEAN/UINF (PERCENT)	URMS/UINF (PERCENT)	UMEAN+3*URMS/UINF (PERCENT)
0.00	27.3	12.2	63.8
22.50	37.9	14.4	81.2
45.00	42.2	11.7	77.2
67.50	28.0	9.6	56.8
90.00	21.3	6.7	41.5
112.50	25.3	7.0	46.1
135.00	27.8	9.1	55.0
157.50	25.0	8.2	49.7
180.00	42.9	11.1	76.3
202.50	36.9	9.4	65.2
225.00	19.7	5.2	35.2
247.50	42.5	10.1	72.9
270.00	44.8	13.2	84.3
292.50	24.0	9.4	52.2
315.00	23.9	11.3	57.9
337.50	33.4	12.9	72.1

LOCATION 10

WIND AZIMUTH	UMEAN/UINF (PERCENT)	URMS/UINF (PERCENT)	UMEAN+3*URMS/UINF (PERCENT)
0.00	24.3	7.8	47.8
22.50	24.5	9.2	52.2
45.00	42.7	12.2	79.2
67.50	47.8	12.7	85.9
90.00	18.3	6.0	36.2
112.50	16.3	4.9	31.2
135.00	25.0	8.5	50.5
157.50	28.6	11.1	61.8
180.00	39.7	12.8	78.1
202.50	44.2	9.9	73.9
225.00	19.3	4.8	33.7
247.50	32.9	9.4	60.9
270.00	35.5	12.3	72.3
292.50	23.1	8.4	48.2
315.00	36.6	16.3	85.4
337.50	24.3	8.4	49.5

LOCATION 11

WIND AZIMUTH	UMEAN/UINF (PERCENT)	URMS/UINF (PERCENT)	UMEAN+3*URMS/UINF (PERCENT)
0.00	30.5	9.8	59.9
22.50	30.1	8.5	55.7
45.00	41.3	10.2	71.8
67.50	45.0	13.2	84.7
90.00	19.6	5.5	36.2
112.50	22.0	7.4	44.2
135.00	31.7	10.7	63.7
157.50	40.1	10.7	72.3
180.00	48.3	12.5	85.7
202.50	51.4	11.5	85.9
225.00	20.3	5.5	36.9
247.50	28.2	9.9	57.8
270.00	28.3	11.0	61.2
292.50	26.8	8.9	53.6
315.00	26.0	8.7	52.0
337.50	33.2	10.8	65.4

LOCATION 12

WIND AZIMUTH	UMEAN/UINF (PERCENT)	URMS/UINF (PERCENT)	UMEAN+3*URMS/UINF (PERCENT)
0.00	35.1	12.1	71.3
22.50	38.0	8.1	62.4
45.00	42.3	10.3	73.3
67.50	42.2	12.5	79.6
90.00	18.1	6.3	36.8
112.50	19.3	6.5	38.7
135.00	41.1	8.2	65.6
157.50	47.3	7.4	69.6
180.00	46.8	8.8	73.1
202.50	47.4	10.2	78.1
225.00	18.9	5.8	36.3
247.50	40.2	11.5	74.7
270.00	39.9	12.8	78.4
292.50	29.5	10.7	61.7
315.00	36.9	13.9	78.7
337.50	40.4	11.2	73.9

TABLE 2--PEDESTRIAN WIND VELOCITIES AND TURBULENCE INTENSITIES

HOUSTON NATIONAL BANK

LOCATION 13

WIND AZIMUTH	UMEAN/UINF (PERCENT)	URMS/UINF (PERCENT)	UMEAN+3*URMS/UINF (PERCENT)
0.00	20.3	7.7	43.4
22.50	16.9	5.1	32.3
45.00	21.5	5.6	38.4
67.50	28.9	9.5	57.5
90.00	24.6	7.5	47.0
112.50	28.0	8.3	52.7
135.00	28.2	8.8	54.6
157.50	27.6	8.8	54.1
180.00	23.8	9.0	50.7
202.50	42.9	13.5	83.4
225.00	34.4	7.8	57.9
247.50	57.4	11.3	91.3
270.00	69.6	10.4	101.0
292.50	63.4	10.0	93.6
315.00	38.2	11.4	72.5
337.50	26.6	9.8	56.0

LOCATION 14

WIND AZIMUTH	UMEAN/UINF (PERCENT)	URMS/UINF (PERCENT)	UMEAN+3*URMS/UINF (PERCENT)
0.00	19.6	7.6	42.5
22.50	11.2	3.1	20.3
45.00	17.9	5.6	34.7
67.50	22.3	8.5	48.0
90.00	24.8	8.6	50.6
112.50	24.2	9.6	52.9
135.00	40.8	8.6	66.6
157.50	33.4	9.0	60.5
180.00	36.1	10.6	67.9
202.50	49.2	12.6	86.9
225.00	31.9	10.6	63.7
247.50	57.8	11.2	91.3
270.00	68.6	12.0	104.5
292.50	64.8	10.3	95.8
315.00	42.4	12.6	80.3
337.50	31.3	14.5	74.8

LOCATION 15

WIND AZIMUTH	UMEAN/UINF (PERCENT)	URMS/UINF (PERCENT)	UMEAN+3*URMS/UINF (PERCENT)
0.00	25.4	9.7	54.4
22.50	14.4	3.6	25.2
45.00	19.7	6.0	37.8
67.50	41.2	11.9	77.0
90.00	38.9	6.3	57.9
112.50	40.8	6.9	61.6
135.00	49.0	9.7	78.0
157.50	40.5	8.0	64.6
180.00	45.9	11.9	81.5
202.50	44.7	12.7	82.8
225.00	29.3	8.9	55.9
247.50	50.7	10.6	82.6
270.00	61.3	9.0	88.3
292.50	59.7	9.9	89.4
315.00	46.4	12.0	82.5
337.50	29.0	12.3	65.9

TABLE 2--PEDESTRIAN WIND VELOCITIES AND TURBULENCE INTENSITIES

HOUSTON NATIONAL BANK

* * GREATEST VALUES * *

UMEAN/UINF (PERCENT)

LOC	AZ	MEAN	RMS	M+3RMS
6	315.0	74.1	12.5	111.6
13	270.0	69.6	10.4	101.0
14	270.0	68.6	12.0	104.5
14	292.5	64.8	10.3	95.8
1	0.0	64.5	11.7	99.7
13	292.5	63.4	10.0	93.6
1	112.5	62.6	16.7	112.6
6	292.5	62.5	14.1	104.8
15	270.0	61.3	9.0	88.3
3	337.5	60.3	11.0	93.1

URMS/UINF (PERCENT)

LOC	AZ	MEAN	RMS	M+3RMS
1	292.5	44.4	22.0	110.4
1	315.0	43.8	17.7	96.9
1	135.0	58.5	17.0	109.6
1	112.5	62.6	16.7	112.6
10	315.0	36.6	16.3	85.4
5	45.0	35.5	16.1	83.8
7	292.5	32.2	14.8	76.6
14	337.5	31.3	14.5	74.8
9	22.5	37.9	14.4	81.2
3	315.0	59.4	14.2	101.9

UMEAN+3*RMS/UINF (PERCENT)

LOC	AZ	MEAN	RMS	M+3RMS
1	112.5	62.6	16.7	112.6
6	315.0	74.1	12.5	111.6
1	292.5	44.4	22.0	110.4
1	135.0	58.5	17.0	109.6
6	292.5	62.5	14.1	104.8
14	270.0	68.6	12.0	104.5
3	315.0	59.4	14.2	101.9
13	270.0	69.6	10.4	101.0
1	0.0	64.5	11.7	99.7
1	315.0	43.8	17.7	96.9

TABLE 3

PERCENTAGE FREQUENCY OF WIND DIRECTION AND SPEED

HOUSTON, TEXAS INTERNATIONAL AIRPORT (1951-1960)

SEASON : ANNUAL NO. OF OBS.= 87672 HT. OF MEAS.= 87. FT.

VELOCITY LEVELS IN MPH

DIRECTION	0- 3	4- 7	8-12	13-18	19-24	25-31	32-38	39-46	47 +	TOTAL
N	.26	.83	1.87	1.75	.61	.13	.01	.02	0.00	5.46
NNE	.23	.93	1.48	1.44	.54	.13	.05	0.00	0.00	4.80
NE	.29	1.05	2.08	1.44	.36	.11	.04	.01	.01	5.38
ENE	.36	1.24	2.80	2.16	.43	.11	.01	0.00	0.00	7.12
E	.32	1.18	2.30	1.23	.32	.11	.01	0.00	0.00	5.47
ESE	.41	1.87	3.09	2.27	.55	.15	.01	0.00	0.00	8.36
SE	.36	1.40	3.93	3.24	1.10	.21	.07	.06	0.00	10.36
SSE	.37	1.75	4.55	4.70	2.06	.34	.08	.06	0.00	13.92
S	.33	1.53	3.30	2.93	.90	.18	.04	0.00	0.00	9.21
SSW	.31	1.12	2.23	1.65	.52	.14	.03	0.00	0.00	5.99
SW	.28	.94	1.35	.74	.23	.10	.01	0.00	0.00	3.66
WSW	.27	.90	1.23	.66	.23	.07	.03	.01	0.00	3.40
W	.20	.67	.87	.39	.18	.08	.02	.01	0.00	2.40
WNW	.24	.78	1.17	.81	.39	.11	.03	.01	.01	3.56
NW	.20	.76	1.30	.96	.47	.12	.04	.03	.01	3.89
NNW	.22	.79	1.70	1.89	.78	.20	.04	.05	.04	5.70
CALM	1.33	0.00	0.00	0.00	0.00	0.00	0.00	0.00	0.00	1.33
TOT	5.97	17.73	35.25	28.26	9.67	2.29	.50	.26	.07	100.00

TABLE 4

SUMMARY OF WIND EFFECTS ON PEOPLE

	Beaufort number	Speed (mph)	Effects
Calm, light air	0, 1	0- 3	Calm, no noticeable wind
Light breeze	2	4- 7	Wind felt on face
Gentle breeze	3	8-12	Wind extends light flag Hair is disturbed Clothing flaps
Moderate breeze	4	13-18	Raises dust, dry soil and loose paper Hair disarranged
Fresh breeze	5	19-24	Force of wind felt on body Drifting snow becomes airborne Limit of agreeable wind on land
Strong breeze	6	25-31	Umbrellas used with difficulty Hair blown straight Difficult to walk steadily Wind noise on ears unpleasant Windborne snow above head height (blizzard)
Near gale	7	32-38	Inconvenience felt when walking
Gale	8	39-46	Generally impedes progress Great difficulty with balance in gusts
Strong gale	9	47-54	People blown over by gusts

Note: Table from Reference 4, p. 40.

TABLE 5

CALCULATION OF REFERENCE PRESSURE

1. Basic wind speed from ANSI A58.1 (Ref. 6):

   50-yr fastest mile at 30 ft = 76 mph

   Mean hourly wind speed = $\frac{76}{1.28}$ = 59.4 mph

   Mean hourly gradient wind speed = $59.4 \left(\frac{1000}{30}\right)^{.17}$ = 107.8 mph

   Mean hourly wind at reference location = U_∞ = gradient wind = 107 mph

   Reference Pressure = $0.5\ \rho\ U_\infty^2 = (.00256)\ (107.8)^2 = \underline{29.7}$

   <u>Use 30 psf</u>

2. Loads for 100-yr recurrence wind:

   100-yr fastest mile at 30 ft = 90 mph

   Multiply 50-yr loads by $\left(\frac{90}{76}\right)^2 = 1.40$

3. Gust load factors to convert hourly mean integrated loads to various gust durations (see Sect. 4.4):

Gust Duration, sec	Gust Load Factor
10 - 15	$(1.4)^2 = 1.96$
30	$(1.32)^2 = 1.74$
45	$(1.26)^2 = 1.59$

The 30 second gust load factor was used in Table 7.

TABLE 6A. PEAK LOADS FOR CONFIGURATION A : HOUSTON NATIONAL BANK
LARGEST VALUES OF CLADDING LOAD REFERENCE PRESSURE = 30.0 PSF

TAP	AZI-MUTH	PRESS COEFF	ABSOLUTE PEAK ---- PSF	POSITIVE PEAK ----	TAP	AZI-MUTH	PRESS COEFF	ABSOLUTE PEAK ---- PSF	POSITIVE PEAK ----	TAP	AZI-MUTH	PRESS COEFF	ABSOLUTE PEAK ---- PSF	POSITIVE PEAK ----
1	120	1.78	53.4	28.7	117	110	1.45	43.5	31.5	165	50	1.26	37.8	30.2
2	30	1.28	38.4	28.1	118	100	1.42	42.7	35.8	166	130	1.94	58.2	28.2
3	30	1.51	45.2	26.5	119	70	1.23	37.0	37.0	167	130	2.76	82.8	27.8
4	230	1.43	42.8	25.2	120	50	1.31	39.3	39.3	168	120	2.16	64.7	28.0
5	30	1.18	35.3	31.4	121	110	1.26	37.7	37.7	169	130	1.41	42.2	25.1
6	30	1.09	32.6	28.9	122	110	1.57	47.2	29.8	170	130	1.31	39.3	28.3
7	220	1.21	36.2	32.1	123	120	1.35	40.4	33.4	171	130	1.17	35.1	30.0
8	220	1.17	35.0	34.7	124	350	1.21	36.3	36.3	172	320	1.25	37.5	33.6
9	230	1.51	45.3	28.0	125	340	1.08	32.4	32.4	173	330	1.91	57.4	23.5
10	230	1.50	44.9	27.2	126	320	1.16	34.7	34.7	174	140	1.38	41.4	19.5
11	220	1.61	48.4	27.9	127	80	1.18	35.5	35.5	175	140	1.46	43.8	20.4
12	230	2.08	62.3	26.8	128	80	1.22	36.5	36.5	176	170	1.61	48.3	20.2
13	110	1.43	42.9	42.9	129	110	1.85	55.4	28.6	177	310	1.07	32.1	22.4
14	50	1.22	36.5	36.5	130	110	1.39	41.8	38.4	178	330	1.29	38.8	22.7
15	0	1.37	41.0	41.0	131	110	1.26	37.7	33.7	179	310	1.32	39.6	21.1
16	240	1.14	34.3	33.6	132	0	1.25	37.5	37.5	180	330	1.29	38.6	21.0
17	110	1.39	41.6	41.6	133	40	1.07	32.0	31.9	181	150	2.33	70.0	14.1
18	110	1.21	36.3	36.3	134	110	1.77	53.2	36.8	182	140	1.70	50.9	15.0
19	290	1.18	35.4	35.4	135	120	1.84	55.2	40.6	183	140	1.12	33.7	20.7
20	350	1.17	35.1	35.1	136	120	2.07	62.2	38.1	184	290	1.10	33.1	21.2
21	90	1.11	33.4	33.4	137	110	1.55	46.6	29.1	185	290	1.14	34.2	19.6
22	20	1.45	43.6	28.2	138	110	1.37	41.1	33.6	186	290	1.07	32.0	22.3
23	110	1.13	34.0	27.1	139	320	1.29	38.7	35.2	187	280	1.59	47.7	23.9
24	110	1.19	35.7	25.3	140	320	1.00	30.0	28.7	188	280	1.37	41.2	23.4
25	140	1.37	41.1	33.8	141	310	1.18	35.3	27.6	189	310	1.55	46.6	22.1
26	120	1.00	29.9	29.9	142	110	1.89	56.7	34.4	190	310	1.74	52.3	19.2
27	340	1.11	33.4	33.4	143	110	1.64	49.2	32.4	191	330	1.51	45.3	17.2
28	350	1.28	38.4	38.4	144	170	1.77	53.0	32.4	201	30	1.37	41.1	31.6
29	170	1.38	41.4	32.8	145	120	1.35	40.5	28.0	202	30	1.35	40.5	25.1
30	140	1.17	35.0	33.1	146	320	1.19	35.8	30.1	203	40	1.09	32.8	20.3
31	280	1.36	40.9	26.7	147	130	1.30	39.0	31.2	204	230	1.45	43.5	28.4
32	120	1.35	40.5	28.6	148	320	2.22	66.6	28.5	205	220	1.65	49.5	35.1
101	320	1.30	39.1	28.4	149	120	1.36	40.9	27.0	206	30	1.27	38.2	31.5
102	100	1.69	50.8	35.4	150	120	1.58	47.5	32.4	207	320	1.35	40.4	40.4
103	300	1.19	35.8	35.3	151	320	1.17	35.2	34.7	208	300	1.39	41.8	41.8
104	100	1.48	44.3	36.1	152	80	1.24	37.1	37.1	209	230	1.51	45.2	40.2
105	310	1.32	39.5	32.2	153	120	1.12	33.5	33.5	210	230	1.87	56.0	32.3
106	110	1.35	40.6	35.8	154	110	1.81	54.2	30.1	211	110	1.26	37.7	32.9
107	300	1.48	44.3	35.9	155	330	1.85	55.6	29.6	212	30	1.37	41.1	32.1
108	300	1.32	39.5	34.4	156	120	1.03	30.9	30.8	213	300	1.25	37.4	37.4
109	80	1.07	32.0	32.0	157	290	1.01	30.3	27.7	214	230	1.57	47.1	31.3
110	80	1.10	32.9	32.9	158	130	1.15	34.5	30.4	215	230	1.76	52.8	33.7
111	50	1.27	38.2	38.2	159	140	1.18	35.3	27.6	216	50	1.44	43.1	33.3
112	10	1.37	41.0	38.9	160	130	1.31	39.3	32.2	217	60	1.27	38.2	29.6
113	90	1.11	33.2	32.2	161	130	1.97	59.0	29.9	218	280	1.21	36.2	24.4
114	20	1.18	35.5	35.5	162	130	1.53	45.8	30.4	219	40	1.56	46.7	40.5
115	350	1.10	33.0	33.0	163	320	1.83	54.8	29.1	220	30	2.25	67.4	31.7
116	110	1.39	41.8	32.7	164	70	1.03	31.0	30.4	221	20	1.75	52.4	32.8

TABLE 6A. PEAK LOADS FOR CONFIGURATION A : HOUSTON NATIONAL BANK
LARGEST VALUES OF CLADDING LOAD REFERENCE PRESSURE = 30.0 PSF

TAP	AZI-MUTH	PRESS COEFF	ABSOLUTE PEAK ---- PSF	POSITIVE PEAK ---- PSF
222	30	1.23	36.9	32.0
223	230	1.86	55.9	34.6
224	230	3.06	91.7	36.4
225	10	1.06	31.8	31.8
226	100	1.18	35.3	34.1
227	40	1.32	39.7	35.9
228	0	1.23	37.0	37.0
229	20	2.18	65.3	33.5
230	20	1.20	36.0	33.1
231	70	1.31	39.2	35.0
232	230	1.58	47.5	32.0
233	230	1.75	52.4	33.0
234	110	1.30	39.1	27.8
235	110	1.28	38.4	31.3
236	30	1.45	43.5	34.8
237	40	1.51	45.4	34.5
238	20	1.93	57.9	27.9
239	20	1.22	36.7	31.7
240	40	1.51	45.4	34.4
241	330	1.14	34.1	34.1
242	230	1.02	30.7	29.9
243	240	1.73	52.0	32.5
244	220	1.57	47.0	34.3
245	120	1.49	44.8	28.4
246	150	.97	29.1	24.4
247	120	1.36	40.8	37.3
248	70	1.49	44.7	31.2
249	40	2.12	63.5	36.5
250	330	1.07	32.2	32.2
251	30	1.12	33.7	33.2
252	30	1.23	36.8	32.2
253	330	1.15	34.5	34.5
254	320	1.04	31.2	31.2
255	300	1.12	33.5	33.5
256	230	1.78	53.4	30.1
257	230	1.78	53.4	29.9
258	130	1.32	39.7	25.4
259	130	1.36	40.7	30.9
260	50	1.44	43.2	30.7
261	30	1.55	46.6	28.0
262	20	1.31	39.4	26.8
263	330	1.14	34.1	34.1
264	320	1.02	30.5	30.5
265	320	.92	27.6	27.6
266	230	.94	28.3	27.1
267	240	1.78	53.4	26.8
268	230	1.65	49.5	25.0
269	120	1.35	40.6	21.9
270	30	1.26	37.8	27.2
271	130	.91	27.4	24.4
272	70	.87	26.2	21.8
273	150	.94	28.2	19.7
274	160	.99	29.8	17.8
275	230	1.29	38.6	21.4
276	240	1.28	38.4	20.9
277	60	.78	23.3	19.9
278	170	.72	21.6	18.4
279	140	.85	25.6	19.1
280	70	1.33	39.9	16.6
281	70	1.52	45.7	19.3
282	90	1.08	32.3	22.5
283	320	.85	25.4	25.4
284	300	.86	25.8	25.8
285	130	.89	26.7	24.9
286	140	.83	24.9	23.9
287	170	1.21	36.2	20.9
288	170	1.38	41.3	19.8
301	150	1.56	46.7	39.7
302	300	1.49	44.8	34.0
303	100	1.35	40.5	37.2
304	100	1.79	53.6	35.0
305	130	1.75	52.4	38.4
306	310	2.58	77.4	33.4
307	310	1.48	44.3	37.1
308	130	1.93	57.9	39.3
309	300	2.91	87.4	34.6
310	300	2.63	79.0	33.0
311	300	1.87	56.2	36.0
312	110	1.64	49.3	39.8
313	120	1.62	48.5	35.9
314	100	1.41	42.4	30.6
315	130	1.80	54.1	33.8
316	130	2.96	88.9	35.4
317	110	2.15	64.4	34.6
318	110	1.81	54.3	33.0
319	290	1.67	50.1	37.2
320	300	1.86	55.9	36.5
321	120	2.03	61.0	31.4
322	140	1.84	55.1	26.9
323	330	1.78	53.5	28.7
324	300	1.95	58.4	34.0
325	300	1.90	57.0	38.0
326	310	1.90	57.1	31.1
327	300	1.69	50.8	28.1
328	110	2.00	60.0	20.8
329	130	2.05	61.4	19.4
330	120	1.81	54.4	19.1
331	290	1.69	50.8	29.5
332	310	1.89	56.8	31.1
333	320	1.87	56.0	33.9
334	300	1.55	46.6	19.2
335	300	1.71	51.2	16.4
336	110	2.48	74.5	13.8
337	340	2.46	73.9	19.5
338	320	1.99	59.6	27.2
339	320	2.32	69.5	30.2
340	340	2.68	80.5	30.4
341	310	1.85	55.4	25.0
342	340	1.51	45.2	14.2
343	340	1.78	53.3	10.9
344	340	1.93	57.9	10.2
345	310	2.85	85.6	24.2
346	330	2.64	79.2	21.7
347	330	1.77	53.1	23.6
348	340	1.66	49.9	19.5
349	70	1.67	50.1	17.6
350	70	1.88	56.3	10.5
351	70	1.68	50.3	10.9
352	80	2.09	62.7	14.7
353	80	3.06	91.8	14.7
354	70	.90	27.1	14.5
355	70	.94	28.2	14.2
356	320	1.07	32.1	22.9
357	320	1.10	33.0	25.1
358	330	1.30	39.0	21.6
359	340	1.07	32.2	23.0
360	340	1.00	30.1	19.0
361	340	1.06	31.9	16.2
362	340	1.27	38.2	16.6
401	190	1.92	57.7	37.0
402	220	1.65	49.4	41.9
403	20	1.62	48.5	42.2
404	40	1.43	43.0	42.1
405	40	1.75	52.6	39.9
406	220	1.36	40.7	33.2
407	220	1.43	42.9	32.1
408	220	1.26	37.7	36.7
409	40	1.38	41.3	36.5
410	90	1.43	42.8	33.5
411	240	1.43	43.0	34.0
412	220	1.34	40.1	39.1
413	100	1.35	40.5	40.5
414	40	1.65	49.6	40.7
415	50	1.53	45.8	42.2

TABLE 6A. PEAK LOADS FOR CONFIGURATION A : HOUSTON NATIONAL BANK
LARGEST VALUES OF CLADDING LOAD REFERENCE PRESSURE = 30.0 PSF

TAP	AZI-MUTH	PRESS COEFF	ABSOLUTE PEAK (PSF)	POSITIVE PEAK (PSF)	TAP	AZI-MUTH	PRESS COEFF	ABSOLUTE PEAK (PSF)	POSITIVE PEAK (PSF)	TAP	AZI-MUTH	PRESS COEFF	ABSOLUTE PEAK (PSF)	POSITIVE PEAK (PSF)
416	190	1.70	50.9	31.5	464	230	1.00	30.0	12.3	615	350	.93	27.8	19.7
417	220	1.33	40.0	32.9	465	0	1.20	36.1	15.6	701	240	1.54	46.2	20.3
418	40	1.36	40.7	37.8	466	60	1.16	34.7	25.4	702	280	.80	24.0	12.1
419	40	1.78	53.4	41.8	467	130	1.33	39.8	28.9	703	340	1.15	34.4	15.8
420	30	2.25	67.6	32.6	468	50	1.38	41.3	24.6	704	180	1.05	31.4	13.3
421	50	1.45	43.4	43.4	469	230	1.25	37.4	14.2	705	350	.81	24.4	18.9
422	120	1.50	45.1	45.1	470	230	1.49	44.8	13.2	706	60	.76	22.9	12.3
423	20	2.04	61.3	39.3	471	230	1.41	42.4	15.0	707	250	.87	26.0	14.7
424	110	1.39	41.6	41.6	472	250	1.00	30.1	10.7	708	340	1.18	35.5	13.9
425	220	1.61	48.3	30.2	473	340	1.36	40.9	13.7	709	340	.88	26.4	18.7
426	220	.93	28.0	24.8	474	340	1.50	45.0	15.9	710	340	.69	20.6	16.4
427	220	1.28	38.4	36.5	475	340	2.25	67.6	20.3	711	60	.85	25.6	17.3
428	90	1.59	47.8	35.7	476	330	1.54	46.1	19.1	712	190	1.14	34.3	16.7
429	40	1.95	58.5	36.5	477	240	1.54	46.3	13.0	801	240	1.40	42.1	16.2
430	40	1.83	55.0	39.9	478	240	1.82	54.7	11.3	802	270	1.39	41.7	14.9
431	30	1.62	48.6	39.2	479	240	1.07	32.1	21.0	803	320	1.14	34.1	12.9
432	110	1.13	34.0	34.0	480	280	.91	27.2	25.2	804	320	1.09	32.7	17.6
433	80	1.34	40.1	40.1	481	120	.95	28.6	28.6	805	290	1.03	30.9	21.7
434	30	1.38	41.5	41.4	483	340	1.91	57.2	21.9	806	250	1.09	32.8	20.4
435	110	1.30	38.9	38.9	484	350	1.81	54.4	14.7	807	320	1.31	39.2	13.4
436	100	1.40	41.9	41.9	485	340	1.05	31.4	15.3	808	290	1.09	32.6	21.0
437	90	1.27	38.2	38.2	486	280	.81	24.2	19.6	809	310	1.15	34.4	15.6
438	220	1.36	40.9	33.9	501	300	.88	26.4	19.8	810	310	1.30	39.1	14.0
439	220	1.54	46.1	30.7	502	270	.89	26.7	21.3	811	300	1.17	35.0	13.1
440	220	1.26	37.8	26.1	503	280	1.08	32.4	16.4	812	300	1.16	34.9	15.6
441	50	1.11	33.2	28.8	504	340	.92	27.5	26.0	813	320	1.22	36.6	21.3
442	30	1.51	45.3	44.3	505	120	1.06	31.7	13.8	814	310	1.07	32.0	17.9
443	40	1.42	42.7	38.3	506	280	.86	25.9	20.4	815	310	1.47	44.1	12.1
444	40	2.17	65.2	32.9	507	290	1.12	33.7	26.7	816	290	.81	24.4	18.2
445	60	1.53	46.0	46.0	508	290	.95	28.6	22.0	817	320	.94	28.2	10.7
446	10	2.83	85.0	47.1	509	300	.92	27.7	16.4	818	300	1.17	35.1	17.5
447	10	1.63	48.9	46.3	510	170	1.14	34.1	15.0	819	290	1.07	32.2	24.6
448	220	1.64	49.3	23.4	511	280	1.00	30.1	16.0	820	260	1.10	33.1	15.1
449	320	1.21	36.2	27.1	512	290	1.03	30.8	17.8	821	290	.79	23.8	23.4
450	310	.99	29.8	22.0	601	330	1.92	57.6	27.5	822	320	1.08	32.5	20.1
451	30	1.17	35.2	15.2	602	340	1.06	31.8	16.8	823	310	1.30	39.0	29.6
452	350	1.16	34.7	14.5	603	310	1.02	30.5	20.2	901	270	1.45	43.6	17.9
453	90	1.42	42.7	24.1	604	320	1.96	58.7	20.0	902	310	1.63	48.8	27.1
454	0	1.48	44.5	24.9	605	340	1.20	36.0	29.8	903	290	1.43	42.8	21.9
455	10	1.66	49.8	36.2	606	310	1.45	43.6	17.3	904	330	1.22	36.6	22.3
456	20	1.24	37.1	29.9	607	340	.90	27.0	18.4	905	320	1.61	48.2	16.7
457	80	1.16	34.9	34.9	608	320	1.64	49.3	30.2	906	250	.95	28.5	22.1
458	140	1.36	40.9	29.0	609	340	1.52	45.6	17.8	907	320	1.33	39.9	15.4
459	340	1.52	45.6	26.9	610	340	1.01	30.4	24.2	908	260	.97	29.2	26.8
460	250	1.23	37.0	29.9	611	270	.92	27.5	23.6	909	300	1.05	31.5	24.9
461	220	1.24	37.3	24.1	612	310	1.33	39.9	18.1	910	310	1.42	42.5	24.0
462	320	1.04	31.2	23.2	613	340	1.35	40.6	31.1	911	340	1.17	35.2	22.3
463	250	.99	29.8	13.1	614	300	1.05	31.4	21.0	912	340	1.81	54.2	25.5

TABLE 6A. PEAK LOADS FOR CONFIGURATION A : HOUSTON NATIONAL BANK
LARGEST VALUES OF CLADDING LOAD REFERENCE PRESSURE = 30.0 PSF

TAP	AZI-MUTH	PRESS COEFF	ABSOLUTE PEAK ---- PSF ----	POSITIVE PEAK ---- PSF ----	TAP	AZI-MUTH	PRESS COEFF	ABSOLUTE PEAK ---- PSF ----	POSITIVE PEAK ---- PSF ----	TAP	AZI-MUTH	PRESS COEFF	ABSOLUTE PEAK ---- PSF ----	POSITIVE PEAK ---- PSF ----
913	320	1.52	45.6	25.2	914	340	1.71	51.2	22.7	915	330	1.92	57.5	23.9

TABLE 6A. PEAK LOADS FOR CONFIGURATION A : HOUSTON NATIONAL BANK
LARGEST VALUES OF CLADDING LOAD REFERENCE PRESSURE = 30.0 PSF

* * 15 GREATEST PRESSURE COEFFICIENTS * *

TAP	AZI-MUTH	PRESS COEFF	ABSOLUTE PEAK	POSITIVE PEAK
			---- PSF	----
353	80	3.06	91.8	14.7
224	230	3.06	91.7	36.4
316	130	2.96	88.9	35.4
309	300	2.91	87.4	34.6
345	310	2.85	85.6	24.2
446	10	2.83	85.0	47.1
167	130	2.76	82.8	27.8
340	340	2.68	80.5	30.4
346	330	2.64	79.2	21.7
310	300	2.63	79.0	33.0
306	310	2.58	77.4	33.4
336	110	2.48	74.5	13.8
337	340	2.46	73.9	19.5
181	150	2.33	70.0	14.1
339	320	2.32	69.5	30.2

TABLE 6A. PEAK LOADS FOR CONFIGURATION B : HOUSTON NATIONAL BANK
LARGEST VALUES OF CLADDING LOAD REFERENCE PRESSURE = 30.0 PSF

TAP	AZI-MUTH	PRESS COEFF	ABSOLUTE PEAK (PSF)	POSITIVE PEAK (PSF)	TAP	AZI-MUTH	PRESS COEFF	ABSOLUTE PEAK (PSF)	POSITIVE PEAK (PSF)	TAP	AZI-MUTH	PRESS COEFF	ABSOLUTE PEAK (PSF)	POSITIVE PEAK (PSF)
167	130	2.12	63.7	31.8	316	136	2.97	89.0	21.4	353	80	2.73	82.0	9.5
224	232	2.75	82.4	30.6	345	314	2.21	66.3	35.1	446	14	2.41	72.4	40.8
309	302	3.05	91.4	39.0										

TABLE 7. BASE SHEAR AND MOMENT SUMMARY : HOUSTON NATIONAL BANK
CONFIGURATION A REFERENCE PRESSURE 30.0 GUST FACTOR 1.32

AZIMUTH DEGREES	X-SHEAR KIPS	Y-SHEAR KIPS	X-MOMENT	Y-MOMENT 1000-FT-KIPS	Z-MOMENT
0	-1469.6	-3395.8	1204.9	-519.8	-74.5
10	-1741.6	-2189.8	806.8	-624.2	-55.3
20	-1790.6	-1000.8	367.2	-658.1	-32.8
30	-1838.0	-88.8	30.2	-674.0	-23.1
40	-1885.6	664.5	-208.2	-701.7	-11.3
50	-1784.6	1347.7	-504.2	-648.8	8.9
60	-1804.5	2126.7	-779.3	-647.8	24.6
70	-1812.9	2441.3	-870.9	-636.0	31.9
80	-1629.1	2223.5	-782.2	-574.3	21.2
90	-1058.4	1887.4	-736.7	-377.1	1.2
100	-702.9	2358.3	-1017.3	-255.1	-21.1
110	-411.9	2964.4	-1298.6	-182.2	-34.8
120	-236.9	2880.6	-1267.6	-147.1	-56.4
130	-96.1	2931.9	-1261.0	-83.5	-77.9
140	166.9	2736.2	-1142.0	16.4	-80.0
150	468.5	2256.6	-950.5	152.9	-69.7
160	626.2	1583.5	-664.5	266.0	-53.2
170	721.5	1471.0	-641.3	333.5	-52.1
180	717.1	1305.0	-564.2	341.0	-43.6
190	505.7	920.5	-392.2	289.7	-32.9
200	292.6	641.4	-258.1	214.6	-21.3
210	109.6	283.2	-136.3	71.5	-13.2
220	496.5	-355.8	161.0	236.0	9.0
230	1497.8	-911.9	276.9	642.1	-9.3
240	1777.9	-1376.1	420.2	709.8	14.4
250	1824.4	-2367.9	780.5	701.5	41.0
260	1861.5	-2936.5	1017.1	687.5	65.8
270	1537.5	-3589.0	1249.0	533.1	84.9
280	1097.2	-4037.1	1435.7	340.0	93.2
290	568.9	-4414.5	1516.3	118.8	89.3
300	-136.6	-4573.2	1615.5	-176.0	82.4
310	-467.3	-4723.1	1642.6	-230.2	38.7
320	-345.5	-4546.7	1613.6	-169.2	.1
330	-614.8	-4351.4	1581.0	-239.4	-25.9
340	-1035.3	-4211.2	1528.7	-349.5	-58.3
350	-1292.6	-4020.3	1446.0	-453.7	-80.8

TABLE 7. SHEAR AND MOMENT DIAGRAMS : HOUSTON NATIONAL BANK
WIND DIRECTION 0 CONFIGURATION A REFERENCE PRESSURE 30.0 PSF GUST FACTOR 1.32

FLOOR	HEIGHT FT	X-FORCE KIPS	Y-FORCE KIPS	X-AREA SQ FT	Y-AREA SQ FT	X-PRESS PSF	Y-PRESS PSF	X-SHEAR KIPS	Y-SHEAR KIPS	X-MOMENT	Y-MOMENT 1000-FT-KIPS	Z-MOMENT
GRND	0.00	-26.9	-22.0	3024	3024	-8.9	-7.3	-1469.6	-3395.8	1204.9	-519.8	-74.5
BASE	12.00	-15.4	-11.5	1512	1512	-10.2	-7.6	-1442.8	-3373.8	1164.3	-502.3	-72.7
MEZZ	18.00	-53.9	-36.1	4536	4536	-11.9	-8.0	-1427.4	-3362.3	1144.1	-493.7	-71.5
2ND	36.00	-42.0	-24.4	3276	6552	-12.8	-3.7	-1373.5	-3326.3	1083.9	-468.5	-66.7
3RD	49.00	-8.0	-6.9	696	1512	-11.6	-4.6	-1331.6	-3301.8	1040.8	-450.9	-62.8
SILL	52.00	-24.5	-26.3	2320	5040	-10.6	-5.2	-1323.5	-3295.0	1030.9	-446.9	-61.9
4TH	62.00	-28.6	-44.8	3016	6552	-9.5	-6.8	-1299.0	-3268.6	998.1	-433.8	-59.2
5TH	75.00	-28.0	-55.4	3016	6552	-9.3	-8.5	-1270.4	-3223.8	955.9	-417.1	-55.3
6TH	88.00	-10.6	-21.0	1160	2520	-9.2	-8.3	-1242.4	-3168.4	914.4	-400.7	-51.1
DUMY	93.00	-15.0	-33.4	1483	4032	-10.1	-8.3	-1231.8	-3147.3	898.6	-394.6	-49.6
7TH	101.00	-23.5	-55.7	2183	6552	-10.8	-8.5	-1216.7	-3113.9	873.5	-384.8	-47.2
8TH	114.00	-22.4	-61.7	1903	6552	-11.8	-9.4	-1193.3	-3058.2	833.4	-369.1	-43.5
9TH	127.00	-11.5	-35.7	909	3528	-12.7	-10.1	-1170.8	-2996.5	794.1	-353.7	-40.2
DUMY	134.00	-9.7	-29.5	744	1512	-13.1	-19.5	-1159.3	-2960.8	773.2	-345.6	-38.5
10TH	140.00	-21.6	-65.4	1612	3276	-13.4	-20.0	-1149.6	-2931.2	755.5	-338.7	-37.0
11TH	153.00	-22.2	-67.3	1612	3276	-13.8	-20.5	-1128.0	-2865.9	717.9	-323.8	-33.9
12TH	166.00	-22.9	-68.7	1612	3276	-14.2	-21.0	-1105.8	-2798.6	681.0	-309.3	-30.6
13TH	179.00	-23.5	-70.2	1612	3276	-14.6	-21.4	-1082.9	-2729.9	645.1	-295.1	-27.5
14TH	192.00	-24.2	-71.7	1612	3276	-15.0	-21.9	-1059.4	-2659.7	610.1	-281.2	-24.5
15TH	205.00	-24.8	-73.1	1612	3276	-15.4	-22.3	-1035.2	-2588.0	576.0	-267.6	-21.5
16TH	218.00	-25.4	-74.6	1612	3276	-15.7	-22.8	-1010.3	-2514.8	542.8	-254.3	-18.7
17TH	231.00	-25.9	-76.1	1612	3276	-16.1	-23.2	-984.9	-2440.3	510.6	-241.3	-15.9
18TH	244.00	-26.5	-77.5	1612	3276	-16.4	-23.7	-959.0	-2364.2	479.4	-228.7	-13.3
19TH	257.00	-26.9	-79.0	1612	3276	-16.7	-24.1	-932.6	-2286.7	449.1	-216.4	-10.7
20TH	270.00	-26.2	-79.6	1612	3276	-16.3	-24.3	-905.7	-2207.7	419.9	-204.4	-8.3
21ST	283.00	-25.5	-80.3	1612	3276	-15.8	-24.5	-879.4	-2128.1	391.7	-192.8	-6.0
22ND	296.00	-22.8	-81.7	1612	3276	-14.2	-24.9	-853.9	-2047.8	364.6	-181.5	-3.7
23RD	309.00	-22.6	-83.1	1612	3276	-14.0	-25.4	-831.0	-1966.2	338.5	-170.6	-1.6
24TH	322.00	-23.0	-84.8	1612	3276	-14.3	-25.9	-808.4	-1883.1	313.5	-159.9	.5
25TH	335.00	-23.4	-86.7	1612	3276	-14.5	-26.5	-785.4	-1798.3	289.5	-149.6	2.7
26TH	348.00	-24.6	-88.4	1612	3276	-15.2	-27.0	-762.0	-1711.6	266.7	-139.5	4.9
27TH	361.00	-21.7	-88.6	1612	3276	-13.4	-27.0	-737.5	-1623.2	245.1	-129.8	7.3
28TH	374.00	-15.2	-85.7	1612	3276	-9.4	-26.2	-715.8	-1534.6	224.5	-120.3	10.2
29TH	387.00	-22.6	-80.1	1612	3276	-14.0	-24.4	-700.6	-1448.9	205.1	-111.1	12.8
30TH	400.00	-23.5	-67.0	1612	3276	-14.6	-20.4	-678.0	-1368.9	186.8	-102.2	14.8
31ST	413.00	-26.3	-69.8	1612	3276	-16.3	-21.3	-654.5	-1301.9	169.5	-93.5	14.8
32ND	426.00	-29.3	-65.1	1612	2635	-18.2	-24.7	-628.2	-1232.1	153.0	-85.2	15.0
33RD	439.00	-32.3	-65.2	1612	2635	-20.0	-24.8	-599.0	-1167.0	137.4	-77.2	14.8
34TH	452.00	-34.9	-65.4	1612	2635	-21.6	-24.8	-566.6	-1101.8	122.7	-69.6	14.7
35TH	465.00	-34.5	-67.0	1612	2635	-21.4	-25.4	-531.8	-1036.4	108.8	-62.5	14.7
36TH	478.00	-34.1	-68.8	1612	2635	-21.2	-26.1	-497.3	-969.3	95.7	-55.8	14.7
37TH	491.00	-31.9	-70.2	1612	2635	-19.8	-26.6	-463.2	-900.5	83.6	-49.5	14.7
38TH	504.00	-31.6	-71.6	1612	2635	-19.6	-27.2	-431.3	-830.3	72.3	-43.7	14.6
39TH	517.00	-31.0	-72.3	1612	2635	-19.2	-27.5	-399.7	-758.8	62.0	-38.3	14.6
40TH	530.00	-30.4	-73.1	1612	2635	-18.8	-27.7	-368.7	-686.4	52.6	-33.3	14.5
41ST	543.00	-31.0	-74.3	1612	2635	-19.2	-28.2	-338.3	-613.4	44.1	-28.7	14.5
42ND	556.00	-30.9	-74.4	1612	2635	-19.2	-28.2	-307.3	-539.0	36.6	-24.5	14.6
43RD	569.00	-21.5	-71.4	1612	2635	-13.3	-27.1	-276.5	-464.7	30.1	-20.7	15.4
44TH	582.00	-32.7	-62.7	1612	2635	-20.3	-23.8	-255.0	-393.2	24.5	-17.3	16.0
45TH	595.00	-23.4	-33.3	1612	2635	-14.5	-12.7	-222.3	-330.5	19.8	-14.2	16.1
46TH	608.00	-23.7	-65.2	1542	2635	-15.4	-24.8	-198.9	-297.1	15.8	-11.4	14.0
47TH	621.00	-24.5	-29.4	1402	1465	-17.4	-20.1	-175.2	-231.9	12.3	-9.0	13.3
48TH	634.00	-25.2	-29.8	1263	1465	-19.9	-20.3	-150.7	-202.5	9.5	-6.9	11.2

TABLE 7 SHEAR AND MOMENT DIAGRAMS : HOUSTON NATIONAL BANK
WIND DIRECTION 0 CONFIGURATION A REFERENCE PRESSURE 30.0 PSF GUST FACTOR 1.32

FLOOR	HEIGHT FT	X-FORCE KIPS	Y-FORCE KIPS	X-AREA SQ FT	Y-AREA SQ FT	X-PRESS PSF	Y-PRESS PSF	X-SHEAR KIPS	Y-SHEAR KIPS	X-MOMENT	Y-MOMENT	Z-MOMENT
										1000-FT-KIPS		
49TH	647.00	-24.8	-29.8	1123	1465	-22.1	-20.4	-125.5	-172.7	7.1	-5.1	9.3
50TH	660.00	-22.8	-29.0	983	1465	-23.2	-19.8	-100.7	-142.9	5.0	-3.6	7.5
51ST	673.00	-20.4	-28.1	844	1465	-24.2	-19.2	-77.9	-113.9	3.3	-2.5	5.8
52ND	686.00	-17.7	-27.1	704	1465	-25.2	-18.5	-57.4	-85.7	2.0	-1.6	4.3
53RD	699.00	-14.6	-25.3	564	1465	-26.0	-17.3	-39.7	-58.7	1.1	-1.0	2.8
54TH	712.00	-8.9	-20.7	424	1465	-20.9	-14.1	-25.0	-33.4	.5	-.5	1.5
55TH	725.00	-16.2	-12.7	450	3718	-36.0	-3.4	-16.2	-12.7	.2	-.3	.6

TABLE 7. SHEAR AND MOMENT DIAGRAMS : HOUSTON NATIONAL BANK
WIND DIRECTION 10 CONFIGURATION A REFERENCE PRESSURE 30.0 PSF GUST FACTOR 1.32

FLOOR	HEIGHT FT	X-FORCE KIPS	Y-FORCE KIPS	X-AREA SQ FT	Y-AREA SQ FT	X-PRESS PSF	Y-PRESS PSF	X-SHEAR KIPS	Y-SHEAR KIPS	X-MOMENT 1000-FT-KIPS	Y-MOMENT 1000-FT-KIPS	Z-MOMENT 1000-FT-KIPS
GRND	0.00	-29.8	-18.4	3024	3024	-9.9	-6.1	-1741.6	-2189.8	806.8	-624.2	-55.3
BASE	12.00	-16.8	-9.3	1512	1512	-11.1	-6.2	-1711.8	-2171.3	780.7	-603.4	-53.3
MEZZ	18.00	-57.6	-28.2	4536	4536	-12.7	-6.2	-1695.0	-2162.0	767.7	-593.2	-52.0
2ND	36.00	-45.0	-16.9	3276	6552	-13.7	-2.6	-1637.4	-2133.8	729.0	-563.2	-47.1
3RD	49.00	-8.8	-4.5	696	1512	-12.6	-3.0	-1592.4	-2116.9	701.4	-542.2	-43.1
SILL	52.00	-27.2	-16.7	2320	5040	-11.7	-3.3	-1583.6	-2112.4	695.0	-537.5	-42.3
4TH	62.00	-32.4	-26.4	3016	6552	-10.7	-4.0	-1556.4	-2095.6	674.0	-521.8	-39.7
5TH	75.00	-32.2	-32.8	3016	6552	-10.7	-5.0	-1524.0	-2069.2	646.9	-501.8	-36.3
6TH	88.00	-12.4	-12.7	1160	2520	-10.7	-5.1	-1491.8	-2036.4	620.2	-482.2	-32.8
DUMY	93.00	-17.7	-20.3	1483	4032	-11.9	-5.0	-1479.4	-2023.7	610.1	-474.7	-31.5
7TH	101.00	-27.8	-33.2	2183	6552	-12.7	-5.1	-1461.7	-2003.4	594.0	-463.0	-29.7
8TH	114.00	-26.4	-33.8	1903	6552	-13.9	-5.2	-1433.9	-1970.3	568.2	-444.1	-26.8
9TH	127.00	-13.4	-18.5	909	3528	-14.7	-5.2	-1407.6	-1936.4	542.8	-425.7	-24.6
DUMY	134.00	-11.2	-16.1	744	1512	-15.1	-10.7	-1394.2	-1918.0	529.3	-415.9	-23.7
10TH	140.00	-24.8	-35.9	1612	3276	-15.4	-11.0	-1382.9	-1901.8	517.8	-407.5	-22.9
11TH	153.00	-25.5	-37.3	1612	3276	-15.8	-11.4	-1358.1	-1865.9	493.3	-389.7	-21.1
12TH	166.00	-26.2	-37.8	1612	3276	-16.2	-11.6	-1332.6	-1828.6	469.3	-372.2	-19.4
13TH	179.00	-26.8	-38.4	1612	3276	-16.6	-11.7	-1306.4	-1790.8	445.8	-355.1	-17.6
14TH	192.00	-27.5	-38.9	1612	3276	-17.1	-11.9	-1279.6	-1752.4	422.8	-338.3	-15.9
15TH	205.00	-28.2	-39.4	1612	3276	-17.5	-12.0	-1252.1	-1713.5	400.2	-321.8	-14.3
16TH	218.00	-28.9	-39.9	1612	3276	-17.9	-12.2	-1223.9	-1674.1	378.2	-305.7	-12.8
17TH	231.00	-29.6	-40.4	1612	3276	-18.4	-12.3	-1195.1	-1634.2	356.7	-290.0	-11.3
18TH	244.00	-30.3	-41.0	1612	3276	-18.8	-12.5	-1165.5	-1593.7	335.7	-274.6	-9.9
19TH	257.00	-30.9	-41.5	1612	3276	-19.2	-12.7	-1135.2	-1552.8	315.3	-259.7	-8.5
20TH	270.00	-30.4	-44.3	1612	3276	-18.8	-13.5	-1104.2	-1511.3	295.3	-245.1	-7.2
21ST	283.00	-29.7	-47.9	1612	3276	-18.4	-14.6	-1073.9	-1467.0	276.0	-231.0	-5.8
22ND	296.00	-26.2	-51.3	1612	3276	-16.2	-15.6	-1044.1	-1419.1	257.2	-217.2	-4.2
23RD	309.00	-26.6	-54.7	1612	3276	-16.5	-16.7	-1018.0	-1367.9	239.1	-203.8	-2.6
24TH	322.00	-27.1	-57.3	1612	3276	-16.8	-17.5	-991.3	-1313.2	221.7	-190.7	-.8
25TH	335.00	-27.7	-59.7	1612	3276	-17.2	-18.2	-964.2	-1255.9	205.0	-178.0	1.1
26TH	348.00	-29.7	-61.4	1612	3276	-18.5	-18.7	-936.5	-1196.2	189.0	-165.7	3.0
27TH	361.00	-34.1	-61.5	1612	3276	-21.2	-18.8	-906.8	-1134.9	173.9	-153.7	5.1
28TH	374.00	-31.8	-58.9	1612	3276	-19.7	-18.0	-872.6	-1073.3	159.5	-142.1	7.4
29TH	387.00	-41.7	-54.0	1612	3276	-25.9	-16.5	-840.8	-1014.5	146.0	-131.0	9.4
30TH	400.00	-35.4	-43.0	1612	3276	-22.0	-13.1	-799.2	-960.4	133.1	-120.3	10.8
31ST	413.00	-35.6	-43.0	1612	3276	-22.1	-13.1	-763.7	-917.5	120.9	-110.2	10.6
32ND	426.00	-36.7	-41.5	1612	2635	-22.8	-15.8	-728.1	-874.5	109.3	-100.5	10.4
33RD	439.00	-37.8	-41.6	1612	2635	-23.4	-15.8	-691.4	-833.0	98.2	-91.2	10.0
34TH	452.00	-38.5	-41.7	1612	2635	-23.9	-15.8	-653.7	-791.3	87.6	-82.5	9.6
35TH	465.00	-37.1	-42.7	1612	2635	-23.0	-16.2	-615.2	-749.6	77.6	-74.3	9.2
36TH	478.00	-35.7	-45.0	1612	2635	-22.2	-17.1	-578.1	-706.9	68.1	-66.5	8.9
37TH	491.00	-31.6	-48.5	1612	2635	-19.6	-18.4	-542.4	-661.9	59.2	-59.2	8.7
38TH	504.00	-31.6	-52.1	1612	2635	-19.6	-19.8	-510.7	-613.4	51.0	-52.4	8.6
39TH	517.00	-31.7	-54.5	1612	2635	-19.6	-20.7	-479.1	-561.4	43.3	-45.9	8.6
40TH	530.00	-31.7	-56.9	1612	2635	-19.6	-21.6	-447.5	-506.9	36.4	-39.9	8.8
41ST	543.00	-33.4	-58.8	1612	2635	-20.7	-22.3	-415.8	-449.9	30.2	-34.3	9.2
42ND	556.00	-38.0	-58.9	1612	2635	-23.6	-22.4	-382.4	-391.1	24.7	-29.1	9.7
43RD	569.00	-31.8	-56.6	1612	2635	-19.7	-21.5	-344.4	-332.2	20.0	-24.4	10.6
44TH	582.00	-45.1	-49.2	1612	2635	-28.0	-18.7	-312.6	-275.6	16.0	-20.1	11.4
45TH	595.00	-32.2	-23.6	1612	2635	-20.0	-8.9	-267.5	-226.4	12.8	-16.4	11.8
46TH	608.00	-31.4	-60.1	1542	2635	-20.4	-22.8	-235.2	-202.8	10.0	-13.1	10.2
47TH	621.00	-31.0	-17.3	1402	1465	-22.1	-11.8	-203.8	-142.8	7.7	-10.2	10.2
48TH	634.00	-30.2	-17.5	1263	1465	-23.9	-11.9	-172.9	-125.5	6.0	-7.8	8.7

TABLE 7. SHEAR AND MOMENT DIAGRAMS : HOUSTON NATIONAL BANK
WIND DIRECTION 10 CONFIGURATION A REFERENCE PRESSURE 30.0 PSF GUST FACTOR 1.32

FLOOR	HEIGHT FT	X-FORCE KIPS	Y-FORCE KIPS	X-AREA SQ FT	Y-AREA SQ FT	X-PRESS PSF	Y-PRESS PSF	X-SHEAR KIPS	Y-SHEAR KIPS	X-MOMENT	Y-MOMENT	Z-MOMENT
										1000-FT-KIPS		
49TH	647.00	-28.8	-17.6	1123	1465	-25.7	-12.0	-142.7	-108.0	4.5	-5.7	7.2
50TH	660.00	-26.0	-17.6	983	1465	-26.4	-12.0	-113.9	-90.4	3.2	-4.1	5.9
51ST	673.00	-22.9	-17.6	844	1465	-27.1	-12.0	-87.9	-72.8	2.1	-2.8	4.6
52ND	686.00	-19.4	-17.6	704	1465	-27.6	-12.0	-65.0	-55.2	1.3	-1.8	3.4
53RD	699.00	-17.6	-16.8	564	1465	-31.1	-11.5	-45.6	-37.6	.7	-1.0	2.3
54TH	712.00	-11.6	-13.2	424	1465	-27.2	-9.0	-28.1	-20.8	.3	-.6	1.3
55TH	725.00	-16.5	-7.6	450	3718	-36.7	-2.1	-16.5	-7.6	.1	-.3	.5

TABLE 7. SHEAR AND MOMENT DIAGRAMS : HOUSTON NATIONAL BANK
WIND DIRECTION 20 CONFIGURATION A REFERENCE PRESSURE 30.0 PSF GUST FACTOR 1.32

FLOOR	HEIGHT FT	X-FORCE KIPS	Y-FORCE KIPS	X-AREA SQ FT	Y-AREA SQ FT	X-PRESS PSF	Y-PRESS PSF	X-SHEAR KIPS	Y-SHEAR KIPS	X-MOMENT	Y-MOMENT	Z-MOMENT
										1000-FT-KIPS		
GRND	0.00	-30.0	-9.4	3024	3024	-9.9	-3.1	-1790.6	-1000.8	367.2	-658.1	-32.8
BASE	12.00	-16.4	-4.7	1512	1512	-10.8	-3.1	-1760.6	-991.5	355.3	-636.8	-31.1
MEZZ	18.00	-54.8	-14.3	4536	4536	-12.1	-3.2	-1744.3	-986.8	349.4	-626.3	-30.0
2ND	36.00	-45.6	-9.2	3276	6552	-13.9	-1.4	-1689.5	-972.5	331.7	-595.4	-26.1
3RD	49.00	-8.8	-2.5	696	1512	-12.7	-1.7	-1643.9	-963.3	319.1	-573.7	-22.3
SILL	52.00	-27.0	-9.4	2320	5040	-11.7	-1.9	-1635.1	-960.8	316.3	-568.8	-21.6
4TH	62.00	-31.9	-15.3	3016	6552	-10.6	-2.3	-1608.0	-951.3	306.7	-552.6	-19.4
5TH	75.00	-32.2	-24.3	3016	6552	-10.7	-3.7	-1576.1	-936.0	294.4	-531.9	-16.6
6TH	88.00	-12.5	-9.1	1160	2520	-10.8	-3.6	-1543.9	-911.8	282.4	-511.6	-13.5
DUMY	93.00	-17.5	-13.1	1483	4032	-11.8	-3.2	-1531.5	-902.7	277.9	-503.9	-12.4
7TH	101.00	-27.4	-18.2	2183	6552	-12.6	-2.8	-1513.9	-889.6	270.7	-491.7	-10.9
8TH	114.00	-25.8	-15.0	1903	6552	-13.5	-2.3	-1486.5	-871.4	259.3	-472.2	-8.8
9TH	127.00	-13.0	-6.8	909	3528	-14.3	-1.9	-1460.7	-856.4	248.0	-453.1	-7.4
DUMY	134.00	-10.9	-6.7	744	1512	-14.6	-4.4	-1447.8	-849.6	242.1	-442.9	-7.1
10TH	140.00	-24.1	-14.6	1612	3276	-15.0	-4.5	-1436.9	-842.9	237.0	-434.2	-6.7
11TH	153.00	-24.9	-14.7	1612	3276	-15.4	-4.5	-1412.8	-828.3	226.1	-415.7	-6.0
12TH	166.00	-25.6	-14.5	1612	3276	-15.9	-4.4	-1387.9	-813.6	215.5	-397.5	-5.3
13TH	179.00	-26.4	-14.3	1612	3276	-16.4	-4.4	-1362.3	-799.1	205.0	-379.6	-4.6
14TH	192.00	-27.1	-14.1	1612	3276	-16.8	-4.3	-1335.9	-784.8	194.7	-362.1	-4.0
15TH	205.00	-27.9	-13.9	1612	3276	-17.3	-4.3	-1308.8	-770.7	184.6	-344.9	-3.5
16TH	218.00	-28.6	-13.7	1612	3276	-17.8	-4.2	-1281.0	-756.7	174.6	-328.1	-3.0
17TH	231.00	-29.4	-13.5	1612	3276	-18.2	-4.1	-1252.3	-743.0	164.9	-311.6	-2.5
18TH	244.00	-30.2	-13.3	1612	3276	-18.7	-4.1	-1222.9	-729.5	155.3	-295.5	-2.2
19TH	257.00	-30.8	-13.1	1612	3276	-19.1	-4.0	-1192.7	-716.1	145.9	-279.8	-1.8
20TH	270.00	-29.4	-15.5	1612	3276	-18.2	-4.7	-1161.9	-703.0	136.7	-264.5	-1.6
21ST	283.00	-27.9	-18.4	1612	3276	-17.3	-5.6	-1132.5	-687.5	127.7	-249.6	-1.2
22ND	296.00	-22.9	-20.8	1612	3276	-14.2	-6.3	-1104.6	-669.1	118.8	-235.1	-.6
23RD	309.00	-23.8	-23.2	1612	3276	-14.8	-7.1	-1081.7	-648.3	110.3	-220.8	-.2
24TH	322.00	-25.5	-25.7	1612	3276	-15.8	-7.8	-1057.9	-625.1	102.0	-206.9	.4
25TH	335.00	-27.1	-28.2	1612	3276	-16.8	-8.6	-1032.5	-599.4	94.0	-193.4	1.0
26TH	348.00	-30.6	-32.1	1612	3276	-19.0	-9.8	-1005.4	-571.2	86.4	-180.1	1.8
27TH	361.00	-38.5	-34.0	1612	3276	-23.9	-10.4	-974.7	-539.1	79.2	-167.2	2.9
28TH	374.00	-36.5	-30.4	1612	3276	-22.6	-9.3	-936.3	-505.1	72.4	-154.8	4.4
29TH	387.00	-41.3	-26.0	1612	3276	-25.6	-7.9	-899.8	-474.7	66.1	-142.9	5.4
30TH	400.00	-37.8	-19.3	1612	3276	-23.5	-5.9	-858.5	-448.7	60.1	-131.5	6.0
31ST	413.00	-38.3	-18.2	1612	3276	-23.8	-5.6	-820.7	-429.4	54.3	-120.5	5.6
32ND	426.00	-39.4	-18.8	1612	2635	-24.4	-7.1	-782.4	-411.2	48.9	-110.1	5.2
33RD	439.00	-40.4	-19.1	1612	2635	-25.1	-7.2	-743.0	-392.4	43.7	-100.2	4.7
34TH	452.00	-40.9	-19.3	1612	2635	-25.4	-7.3	-702.6	-373.4	38.7	-90.8	4.3
35TH	465.00	-38.0	-18.8	1612	2635	-23.6	-7.1	-661.7	-354.1	33.9	-81.9	3.9
36TH	478.00	-35.1	-19.3	1612	2635	-21.8	-7.3	-623.6	-335.2	29.5	-73.6	3.6
37TH	491.00	-28.8	-21.6	1612	2635	-17.9	-8.2	-588.5	-315.9	25.2	-65.7	3.4
38TH	504.00	-28.4	-23.8	1612	2635	-17.6	-9.0	-559.7	-294.3	21.3	-58.2	3.3
39TH	517.00	-28.1	-26.3	1612	2635	-17.4	-10.0	-531.4	-270.5	17.6	-51.2	3.3
40TH	530.00	-27.9	-29.4	1612	2635	-17.3	-11.1	-503.2	-244.1	14.3	-44.4	3.6
41ST	543.00	-30.9	-31.3	1612	2635	-19.2	-11.9	-475.4	-214.8	11.3	-38.1	3.9
42ND	556.00	-45.0	-31.6	1612	2635	-27.9	-12.0	-444.4	-183.4	8.7	-32.1	4.3
43RD	569.00	-39.4	-30.9	1612	2635	-24.5	-11.7	-399.4	-151.8	6.5	-26.6	4.9
44TH	582.00	-49.0	-27.3	1612	2635	-30.4	-10.4	-360.0	-120.9	4.7	-21.7	5.3
45TH	595.00	-45.1	-13.4	1612	2635	-28.0	-5.1	-310.9	-93.6	3.3	-17.3	5.4
46TH	608.00	-42.6	-49.7	1542	2635	-27.6	-18.9	-265.9	-80.3	2.2	-13.6	4.5
47TH	621.00	-39.0	-5.8	1402	1465	-27.8	-4.0	-223.3	-30.5	1.5	-10.4	5.1
48TH	634.00	-36.1	-4.9	1263	1465	-28.6	-3.4	-184.3	-24.7	1.1	-7.7	4.2

TABLE 7. SHEAR AND MOMENT DIAGRAMS : HOUSTON NATIONAL BANK
WIND DIRECTION 20 CONFIGURATION A REFERENCE PRESSURE 30.0 PSF GUST FACTOR 1.32

FLOOR	HEIGHT FT	X-FORCE KIPS	Y-FORCE KIPS	X-AREA SQ FT	Y-AREA SQ FT	X-PRESS PSF	Y-PRESS PSF	X-SHEAR KIPS	Y-SHEAR KIPS	X-MOMENT	Y-MOMENT	Z-MOMENT
										1000-FT-KIPS		
49TH	647.00	-32.9	-4.1	1123	1465	-29.3	-2.8	-148.2	-19.8	.8	-5.6	3.4
50TH	660.00	-28.6	-3.3	983	1465	-29.1	-2.3	-115.2	-15.7	.6	-3.9	2.8
51ST	673.00	-24.2	-2.6	844	1465	-28.6	-1.8	-86.6	-12.4	.4	-2.5	2.1
52ND	686.00	-19.6	-2.3	704	1465	-27.8	-1.6	-62.4	-9.7	.3	-1.6	1.6
53RD	699.00	-18.1	-2.4	564	1465	-32.1	-1.6	-42.8	-7.4	.2	-.9	1.1
54TH	712.00	-12.2	-2.7	424	1465	-28.9	-1.9	-24.8	-5.1	.1	-.4	.7
55TH	725.00	-12.5	-2.3	450	3718	-27.8	-.6	-12.5	-2.3	.0	-.2	.3

TABLE 7. SHEAR AND MOMENT DIAGRAMS : HOUSTON NATIONAL BANK
WIND DIRECTION 30 CONFIGURATION A REFERENCE PRESSURE 30.0 PSF GUST FACTOR 1.32

FLOOR	HEIGHT FT	X-FORCE KIPS	Y-FORCE KIPS	X-AREA SQ FT	Y-AREA SQ FT	X-PRESS PSF	Y-PRESS PSF	X-SHEAR KIPS	Y-SHEAR KIPS	X-MOMENT	Y-MOMENT 1000-FT-KIPS	Z-MOMENT
GRND	0.00	-32.2	-3.5	3024	3024	-10.6	-1.1	-1838.0	-88.8	30.2	-674.0	-23.1
BASE	12.00	-17.2	-1.8	1512	1512	-11.4	-1.2	-1805.8	-85.4	29.2	-652.1	-21.6
MEZZ	18.00	-56.6	-5.6	4536	4536	-12.5	-1.2	-1788.6	-83.6	28.7	-641.3	-20.8
2ND	36.00	-49.1	-5.8	3276	6552	-15.0	-.9	-1732.0	-78.0	27.2	-609.7	-17.5
3RD	49.00	-9.4	-1.3	696	1512	-13.5	-.9	-1682.9	-72.2	26.3	-587.5	-13.8
SILL	52.00	-28.6	-4.5	2320	5040	-12.3	-.9	-1673.5	-70.9	26.0	-582.4	-13.1
4TH	62.00	-33.2	-5.5	3016	6552	-11.0	-.8	-1644.9	-66.4	25.4	-565.8	-11.2
5TH	75.00	-33.3	-17.1	3016	6552	-11.0	-2.6	-1611.7	-60.9	24.5	-544.7	-9.1
6TH	88.00	-12.9	-6.1	1160	2520	-11.1	-2.4	-1578.4	-43.7	23.8	-523.9	-6.8
DUMY	93.00	-17.7	-6.6	1483	4032	-11.9	-1.6	-1565.6	-37.6	23.6	-516.1	-5.9
7TH	101.00	-27.2	-4.4	2183	6552	-12.5	-.7	-1547.9	-31.0	23.4	-503.6	-4.9
8TH	114.00	-25.0	2.3	1903	6552	-13.1	.4	-1520.7	-26.6	23.0	-483.7	-3.6
9TH	127.00	-12.3	4.0	909	3528	-13.6	1.1	-1495.6	-28.9	22.6	-464.1	-3.1
DUMY	134.00	-10.3	1.8	744	1512	-13.8	1.2	-1483.3	-33.0	22.4	-453.6	-3.2
10TH	140.00	-23.1	3.7	1612	3276	-14.3	1.1	-1473.0	-34.8	22.2	-444.8	-3.2
11TH	153.00	-24.2	3.5	1612	3276	-15.0	1.1	-1449.9	-38.4	21.7	-425.8	-3.2
12TH	166.00	-25.3	3.2	1612	3276	-15.7	1.0	-1425.7	-41.9	21.2	-407.1	-3.3
13TH	179.00	-26.4	2.8	1612	3276	-16.4	.9	-1400.4	-45.1	20.6	-388.7	-3.3
14TH	192.00	-27.4	2.5	1612	3276	-17.0	.8	-1374.0	-47.9	20.0	-370.7	-3.3
15TH	205.00	-28.6	2.2	1612	3276	-17.7	.7	-1346.6	-50.4	19.4	-353.0	-3.4
16TH	218.00	-29.7	1.8	1612	3276	-18.5	.6	-1318.0	-52.6	18.7	-335.7	-3.4
17TH	231.00	-30.9	1.5	1612	3276	-19.2	.5	-1288.3	-54.4	18.0	-318.7	-3.5
18TH	244.00	-32.1	1.1	1612	3276	-19.9	.3	-1257.3	-55.8	17.3	-302.2	-3.6
19TH	257.00	-33.1	.8	1612	3276	-20.5	.2	-1225.2	-57.0	16.6	-286.0	-3.7
20TH	270.00	-30.8	1.3	1612	3276	-19.1	.4	-1192.1	-57.8	15.8	-270.3	-3.8
21ST	283.00	-28.5	2.0	1612	3276	-17.7	.6	-1161.3	-59.1	15.1	-255.0	-3.9
22ND	296.00	-23.5	2.7	1612	3276	-14.6	.8	-1132.8	-61.1	14.3	-240.1	-4.0
23RD	309.00	-24.3	3.4	1612	3276	-15.1	1.0	-1109.3	-63.8	13.5	-225.5	-4.3
24TH	322.00	-26.0	2.7	1612	3276	-16.1	.8	-1085.0	-67.3	12.6	-211.3	-4.7
25TH	335.00	-27.6	1.3	1612	3276	-17.1	.4	-1059.0	-69.9	11.7	-197.3	-5.0
26TH	348.00	-31.3	-8.4	1612	3276	-19.4	-2.6	-1031.4	-71.2	10.8	-183.8	-5.2
27TH	361.00	-42.4	-14.7	1612	3276	-26.3	-4.5	-1000.1	-62.8	10.0	-170.6	-4.3
28TH	374.00	-41.5	-7.3	1612	3276	-25.8	-2.2	-957.7	-48.1	9.2	-157.8	-2.7
29TH	387.00	-41.4	-1.6	1612	3276	-25.7	-.5	-916.2	-40.8	8.7	-145.6	-2.0
30TH	400.00	-39.9	-.4	1612	3276	-24.7	-.1	-874.8	-39.2	8.1	-134.0	-1.8
31ST	413.00	-40.2	-1.2	1612	3276	-24.9	-.4	-834.9	-38.8	7.6	-122.9	-1.8
32ND	426.00	-40.7	.1	1612	2635	-25.2	.0	-794.8	-37.6	7.1	-112.3	-1.7
33RD	439.00	-41.2	.2	1612	2635	-25.6	.1	-754.1	-37.7	6.7	-102.2	-1.7
34TH	452.00	-41.2	.4	1612	2635	-25.6	.1	-712.9	-37.9	6.2	-92.7	-1.7
35TH	465.00	-38.2	2.8	1612	2635	-23.7	1.0	-671.7	-38.2	5.7	-83.7	-1.7
36TH	478.00	-35.1	4.3	1612	2635	-21.8	1.6	-633.5	-41.0	5.2	-75.2	-1.7
37TH	491.00	-28.0	3.7	1612	2635	-17.4	1.4	-598.4	-45.3	4.6	-67.2	-1.7
38TH	504.00	-28.1	3.0	1612	2635	-17.4	1.1	-570.4	-48.9	4.0	-59.6	-1.8
39TH	517.00	-28.3	-.6	1612	2635	-17.6	-.2	-542.3	-52.0	3.3	-52.4	-1.9
40TH	530.00	-28.5	-5.1	1612	2635	-17.7	-1.9	-514.0	-51.4	2.6	-45.5	-1.8
41ST	543.00	-31.6	-6.3	1612	2635	-19.6	-2.4	-485.5	-46.3	2.0	-39.0	-1.7
42ND	556.00	-45.9	-5.5	1612	2635	-28.5	-2.1	-453.8	-40.1	1.5	-32.9	-1.5
43RD	569.00	-42.2	-3.7	1612	2635	-26.2	-1.4	-407.9	-34.6	1.0	-27.3	-1.3
44TH	582.00	-41.7	-2.0	1612	2635	-25.8	-.8	-365.7	-30.9	.5	-22.3	-1.1
45TH	595.00	-46.0	-.3	1612	2635	-28.5	-.1	-324.0	-28.9	.2	-17.8	-1.1
46TH	608.00	-44.8	-39.0	1542	2635	-29.0	-14.8	-278.0	-28.6	-.2	-13.9	-1.1
47TH	621.00	-41.3	2.8	1402	1465	-29.5	1.9	-233.2	10.3	-.3	-10.6	.3
48TH	634.00	-38.8	1.7	1263	1465	-30.7	1.1	-191.9	7.6	-.2	-7.8	.3

TABLE 7. SHEAR AND MOMENT DIAGRAMS : HOUSTON NATIONAL BANK
WIND DIRECTION 30 CONFIGURATION A REFERENCE PRESSURE 30.0 PSF GUST FACTOR 1.32

FLOOR	HEIGHT FT	X-FORCE KIPS	Y-FORCE KIPS	X-AREA SQ FT	Y-AREA SQ FT	X-PRESS PSF	Y-PRESS PSF	X-SHEAR KIPS	Y-SHEAR KIPS	X-MOMENT	Y-MOMENT	Z-MOMENT
										1000-FT-KIPS		
49TH	647.00	-35.3	1.0	1123	1465	-31.5	.7	-153.1	5.9	-.1	-5.6	.3
50TH	660.00	-30.5	1.3	983	1465	-31.0	.9	-117.8	5.0	-.1	-3.8	.2
51ST	673.00	-25.5	1.7	844	1465	-30.2	1.1	-87.3	3.6	-.0	-2.5	.2
52ND	686.00	-20.4	1.8	704	1465	-28.9	1.2	-61.8	2.0	.0	-1.5	.1
53RD	699.00	-18.1	1.5	564	1465	-32.0	1.0	-41.5	.2	.0	-.8	.1
54TH	712.00	-12.6	-.1	424	1465	-29.7	-.0	-23.4	-1.2	.0	-.4	.1
55TH	725.00	-10.8	-1.2	450	3718	-24.0	-.3	-10.8	-1.2	.0	-.2	.1

TABLE 7. SHEAR AND MOMENT DIAGRAMS : HOUSTON NATIONAL BANK
WIND DIRECTION 40 CONFIGURATION A REFERENCE PRESSURE 30.0 PSF GUST FACTOR 1.32

FLOOR	HEIGHT FT	X-FORCE KIPS	Y-FORCE KIPS	X-AREA SQ FT	Y-AREA SQ FT	X-PRESS PSF	Y-PRESS PSF	X-SHEAR KIPS	Y-SHEAR KIPS	X-MOMENT 1000-FT-KIPS	Y-MOMENT 1000-FT-KIPS	Z-MOMENT 1000-FT-KIPS
GRND	0.00	-33.6	4.8	3024	3024	-11.1	1.6	-1885.6	664.5	-208.2	-701.7	-11.3
BASE	12.00	-17.9	2.3	1512	1512	-11.8	1.5	-1852.0	659.7	-200.2	-679.2	-10.0
MEZZ	18.00	-57.8	6.8	4536	4536	-12.7	1.5	-1834.1	657.4	-196.3	-668.2	-9.2
2ND	36.00	-40.8	.7	3276	6552	-12.5	.1	-1776.3	650.6	-184.5	-635.7	-6.1
3RD	49.00	-8.4	.4	696	1512	-12.1	.3	-1735.5	649.9	-176.0	-612.9	-4.0
SILL	52.00	-27.2	2.1	2320	5040	-11.7	.4	-1727.1	649.5	-174.1	-607.7	-3.6
4TH	62.00	-34.3	5.5	3016	6552	-11.4	.8	-1699.9	647.4	-167.6	-590.5	-2.2
5TH	75.00	-35.0	2.5	3016	6552	-11.6	.4	-1665.5	641.9	-159.2	-568.7	-.7
6TH	88.00	-13.6	1.8	1160	2520	-11.7	.7	-1630.6	639.4	-150.9	-547.2	1.1
DUMY	93.00	-17.9	5.4	1483	4032	-12.1	1.3	-1617.0	637.7	-147.7	-539.1	1.8
7TH	101.00	-26.9	13.5	2183	6552	-12.3	2.1	-1599.0	632.3	-142.6	-526.3	2.3
8TH	114.00	-24.0	18.3	1903	6552	-12.6	2.8	-1572.1	618.8	-134.5	-505.6	2.5
9TH	127.00	-11.7	11.9	909	3528	-12.8	3.4	-1548.1	600.5	-126.6	-485.4	2.2
DUMY	134.00	-9.7	9.2	744	1512	-13.1	6.1	-1536.4	588.6	-122.4	-474.6	1.8
10TH	140.00	-22.0	19.8	1612	3276	-13.6	6.0	-1526.7	579.4	-118.9	-465.4	1.4
11TH	153.00	-23.2	19.6	1612	3276	-14.4	6.0	-1504.8	559.6	-111.5	-445.7	.6
12TH	166.00	-24.5	19.3	1612	3276	-15.2	5.9	-1481.6	540.0	-104.4	-426.3	-.1
13TH	179.00	-25.7	19.0	1612	3276	-16.0	5.8	-1457.1	520.7	-97.5	-407.2	-.7
14TH	192.00	-27.0	18.7	1612	3276	-16.7	5.7	-1431.3	501.7	-90.8	-388.4	-1.4
15TH	205.00	-28.2	18.3	1612	3276	-17.5	5.6	-1404.3	483.1	-84.4	-370.0	-2.0
16TH	218.00	-29.4	18.0	1612	3276	-18.2	5.5	-1376.1	464.7	-78.3	-351.9	-2.6
17TH	231.00	-30.6	17.7	1612	3276	-19.0	5.4	-1346.7	446.7	-72.3	-334.2	-3.2
18TH	244.00	-31.8	17.4	1612	3276	-19.7	5.3	-1316.1	429.1	-66.6	-316.9	-3.7
19TH	257.00	-32.8	17.0	1612	3276	-20.3	5.2	-1284.4	411.7	-61.2	-300.0	-4.2
20TH	270.00	-31.1	19.1	1612	3276	-19.3	5.8	-1251.6	394.7	-55.9	-283.5	-4.6
21ST	283.00	-29.5	21.8	1612	3276	-18.3	6.7	-1220.5	375.5	-50.9	-267.4	-5.1
22ND	296.00	-26.0	23.8	1612	3276	-16.1	7.3	-1191.0	353.8	-46.2	-251.7	-5.7
23RD	309.00	-27.2	25.8	1612	3276	-16.8	7.9	-1165.0	330.0	-41.7	-236.4	-6.5
24TH	322.00	-28.7	25.9	1612	3276	-17.8	7.9	-1137.9	304.1	-37.6	-221.5	-7.3
25TH	335.00	-30.3	25.1	1612	3276	-18.8	7.7	-1109.1	278.3	-33.8	-206.9	-8.1
26TH	348.00	-33.8	14.2	1612	3276	-21.0	4.3	-1078.8	253.1	-30.4	-192.6	-8.8
27TH	361.00	-45.1	6.7	1612	3276	-28.0	2.1	-1045.0	238.9	-27.2	-178.8	-8.2
28TH	374.00	-43.7	14.6	1612	3276	-27.1	4.5	-999.9	232.2	-24.1	-165.5	-6.9
29TH	387.00	-36.9	18.5	1612	3276	-22.9	5.7	-956.2	217.6	-21.2	-152.8	-6.7
30TH	400.00	-40.1	11.7	1612	3276	-24.9	3.6	-919.3	199.0	-18.5	-140.6	-7.1
31ST	413.00	-41.1	7.4	1612	3276	-25.5	2.3	-879.1	187.3	-16.0	-128.9	-6.6
32ND	426.00	-41.7	9.2	1612	2635	-25.9	3.5	-838.0	179.9	-13.6	-117.8	-5.7
33RD	439.00	-42.3	8.2	1612	2635	-26.2	3.1	-796.4	170.8	-11.3	-107.2	-5.2
34TH	452.00	-42.5	7.3	1612	2635	-26.3	2.8	-754.1	162.5	-9.1	-97.1	-4.7
35TH	465.00	-39.9	13.3	1612	2635	-24.8	5.1	-711.6	155.2	-7.1	-87.6	-4.3
36TH	478.00	-37.4	18.4	1612	2635	-23.2	7.0	-671.6	141.9	-5.1	-78.6	-4.1
37TH	491.00	-31.4	18.7	1612	2635	-19.5	7.1	-634.3	123.5	-3.4	-70.1	-4.0
38TH	504.00	-31.2	19.0	1612	2635	-19.4	7.2	-602.9	104.8	-1.9	-62.0	-4.0
39TH	517.00	-30.9	17.8	1612	2635	-19.2	6.8	-571.6	85.8	-.7	-54.4	-4.0
40TH	530.00	-30.6	16.2	1612	2635	-19.0	6.2	-540.7	68.0	.3	-47.2	-3.9
41ST	543.00	-33.9	17.2	1612	2635	-21.0	6.5	-510.2	51.8	1.1	-40.3	-3.8
42ND	556.00	-53.1	19.3	1612	2635	-33.0	7.3	-476.3	34.6	1.6	-33.9	-3.7
43RD	569.00	-50.4	21.1	1612	2635	-31.3	8.0	-423.1	15.2	2.0	-28.1	-3.9
44TH	582.00	-41.4	20.0	1612	2635	-25.7	7.6	-372.7	-5.9	2.0	-22.9	-4.2
45TH	595.00	-47.7	8.5	1612	2635	-29.6	3.2	-331.3	-26.0	1.8	-18.3	-4.4
46TH	608.00	-46.2	-25.0	1542	2635	-29.9	-9.5	-283.6	-34.4	1.4	-14.3	-3.8
47TH	621.00	-41.8	4.3	1402	1465	-29.8	3.0	-237.4	-9.4	1.1	-10.9	-2.1
48TH	634.00	-38.4	1.4	1263	1465	-30.4	1.0	-195.6	-13.8	1.0	-8.1	-1.7

TABLE 7. SHEAR AND MOMENT DIAGRAMS : HOUSTON NATIONAL BANK
WIND DIRECTION 40 CONFIGURATION A REFERENCE PRESSURE 30.0 PSF GUST FACTOR 1.32

FLOOR	HEIGHT FT	X-FORCE KIPS	Y-FORCE KIPS	X-AREA SQ FT	Y-AREA SQ FT	X-PRESS PSF	Y-PRESS PSF	X-SHEAR KIPS	Y-SHEAR KIPS	X-MOMENT	Y-MOMENT	Z-MOMENT
										1000-FT-KIPS		
49TH	647.00	-34.6	-.9	1123	1465	-30.8	-.6	-157.2	-15.2	.8	-5.8	-1.3
50TH	660.00	-30.3	-1.6	983	1465	-30.9	-1.1	-122.6	-14.3	.6	-4.0	-1.0
51ST	673.00	-25.8	-2.3	844	1465	-30.6	-1.6	-92.2	-12.7	.4	-2.6	-.8
52ND	686.00	-21.1	-2.7	704	1465	-30.0	-1.8	-66.4	-10.4	.3	-1.6	-.6
53RD	699.00	-20.0	-2.7	564	1465	-35.5	-1.9	-45.3	-7.7	.2	-.9	-.5
54TH	712.00	-14.7	-2.8	424	1465	-34.6	-1.9	-25.3	-5.0	.1	-.4	-.3
55TH	725.00	-10.6	-2.2	450	3718	-23.5	-.6	-10.6	-2.2	.0	-.2	-.1

TABLE 7. SHEAR AND MOMENT DIAGRAMS : HOUSTON NATIONAL BANK
WIND DIRECTION 50 CONFIGURATION A REFERENCE PRESSURE 30.0 PSF GUST FACTOR 1.32

FLOOR	HEIGHT FT	X-FORCE KIPS	Y-FORCE KIPS	X-AREA SQ FT	Y-AREA SQ FT	X-PRESS PSF	Y-PRESS PSF	X-SHEAR KIPS	Y-SHEAR KIPS	X-MOMENT 1000-FT-KIPS	Y-MOMENT 1000-FT-KIPS	Z-MOMENT 1000-FT-KIPS
GRND	0.00	-36.4	3.7	3024	3024	-12.0	1.2	-1784.6	1347.7	-504.2	-648.8	8.9
BASE	12.00	-17.4	1.6	1512	1512	-11.5	1.0	-1748.3	1344.0	-488.0	-627.7	10.6
MEZZ	18.00	-49.5	3.4	4536	4536	-10.9	.8	-1730.8	1342.5	-480.0	-617.2	11.4
2ND	36.00	-38.7	-3.8	3276	6552	-11.8	-.6	-1681.3	1339.0	-455.9	-586.5	13.4
3RD	49.00	-8.4	-.5	696	1512	-12.1	-.3	-1642.6	1342.9	-438.4	-564.9	15.4
SILL	52.00	-28.5	-.6	2320	5040	-12.3	-.1	-1634.2	1343.4	-434.4	-560.0	15.9
4TH	62.00	-38.1	2.8	3016	6552	-12.6	.4	-1605.7	1344.0	-421.0	-543.8	17.4
5TH	75.00	-39.9	-6.0	3016	6552	-13.2	-.9	-1567.6	1341.2	-403.5	-523.2	19.2
6TH	88.00	-15.8	.3	1160	2520	-13.6	.1	-1527.7	1347.1	-386.0	-503.0	21.5
DUMY	93.00	-20.1	6.9	1483	4032	-13.5	1.7	-1511.9	1346.9	-379.3	-495.4	22.3
7TH	101.00	-29.8	20.9	2183	6552	-13.6	3.2	-1491.8	1340.0	-368.5	-483.4	22.6
8TH	114.00	-25.7	26.3	1903	6552	-13.5	4.0	-1462.1	1319.1	-351.3	-464.2	22.4
9TH	127.00	-12.0	16.4	909	3528	-13.2	4.6	-1436.3	1292.8	-334.3	-445.4	21.6
DUMY	134.00	-9.8	13.3	744	1512	-13.1	8.8	-1424.4	1276.4	-325.3	-435.4	20.9
10TH	140.00	-21.8	29.2	1612	3276	-13.6	8.9	-1414.6	1263.2	-317.7	-426.9	20.2
11TH	153.00	-22.8	29.9	1612	3276	-14.2	9.1	-1392.8	1233.9	-301.4	-408.6	18.6
12TH	166.00	-23.8	30.0	1612	3276	-14.8	9.1	-1369.9	1204.1	-285.6	-390.6	17.1
13TH	179.00	-24.8	30.1	1612	3276	-15.4	9.2	-1346.1	1174.1	-270.1	-373.0	15.6
14TH	192.00	-25.7	30.1	1612	3276	-16.0	9.2	-1321.4	1144.1	-255.1	-355.7	14.1
15TH	205.00	-26.8	30.2	1612	3276	-16.6	9.2	-1295.6	1113.9	-240.4	-338.6	12.6
16TH	218.00	-27.9	30.3	1612	3276	-17.3	9.3	-1268.9	1083.7	-226.1	-322.0	11.2
17TH	231.00	-29.1	30.4	1612	3276	-18.0	9.3	-1241.0	1053.4	-212.2	-305.7	9.8
18TH	244.00	-30.2	30.5	1612	3276	-18.8	9.3	-1211.9	1023.0	-198.7	-289.7	8.5
19TH	257.00	-31.2	30.6	1612	3276	-19.4	9.3	-1181.7	992.5	-185.6	-274.2	7.1
20TH	270.00	-29.8	35.4	1612	3276	-18.5	10.8	-1150.5	962.0	-172.9	-259.0	5.9
21ST	283.00	-28.4	40.6	1612	3276	-17.6	12.4	-1120.6	926.6	-160.6	-244.2	4.3
22ND	296.00	-26.4	42.6	1612	3276	-16.4	13.0	-1092.3	886.0	-148.9	-229.9	2.4
23RD	309.00	-27.0	44.6	1612	3276	-16.7	13.6	-1065.8	843.5	-137.6	-215.8	.5
24TH	322.00	-27.9	44.8	1612	3276	-17.3	13.7	-1038.8	798.9	-126.9	-202.1	-1.5
25TH	335.00	-28.9	44.3	1612	3276	-17.9	13.5	-1010.9	754.1	-116.8	-188.8	-3.4
26TH	348.00	-31.3	33.8	1612	3276	-19.4	10.3	-982.0	709.8	-107.3	-175.9	-5.2
27TH	361.00	-38.9	27.2	1612	3276	-24.1	8.3	-950.7	675.9	-98.3	-163.3	-5.7
28TH	374.00	-35.7	36.7	1612	3276	-22.1	11.2	-911.8	648.7	-89.7	-151.2	-5.7
29TH	387.00	-25.1	39.9	1612	3276	-15.6	12.2	-876.1	612.0	-81.5	-139.6	-6.9
30TH	400.00	-31.7	26.1	1612	3276	-19.7	8.0	-851.0	572.1	-73.8	-128.4	-8.5
31ST	413.00	-34.9	23.0	1612	3276	-21.6	7.0	-819.3	546.0	-66.6	-117.5	-8.1
32ND	426.00	-37.5	24.2	1612	2635	-23.3	9.2	-784.4	523.0	-59.6	-107.1	-7.5
33RD	439.00	-40.2	24.2	1612	2635	-24.9	9.2	-746.9	498.8	-53.0	-97.1	-7.1
34TH	452.00	-42.2	24.2	1612	2635	-26.2	9.2	-706.7	474.6	-46.6	-87.7	-6.7
35TH	465.00	-40.4	28.0	1612	2635	-25.0	10.6	-664.5	450.5	-40.6	-78.8	-6.5
36TH	478.00	-38.5	31.9	1612	2635	-23.9	12.1	-624.2	422.5	-34.9	-70.4	-6.3
37TH	491.00	-35.0	33.9	1612	2635	-21.7	12.9	-585.7	390.6	-29.7	-62.5	-6.3
38TH	504.00	-34.4	35.9	1612	2635	-21.3	13.6	-550.7	356.7	-24.8	-55.1	-6.3
39TH	517.00	-33.5	37.2	1612	2635	-20.8	14.1	-516.3	320.8	-20.4	-48.2	-6.4
40TH	530.00	-32.5	38.6	1612	2635	-20.2	14.7	-482.9	283.6	-16.5	-41.7	-6.6
41ST	543.00	-34.4	40.7	1612	2635	-21.3	15.5	-450.3	245.0	-13.0	-35.6	-6.8
42ND	556.00	-51.0	42.5	1612	2635	-31.7	16.1	-415.9	204.3	-10.1	-30.0	-7.1
43RD	569.00	-50.3	44.7	1612	2635	-31.2	17.0	-364.9	161.8	-7.7	-24.9	-8.0
44TH	582.00	-32.6	41.0	1612	2635	-20.2	15.6	-314.6	117.1	-5.9	-20.5	-8.8
45TH	595.00	-32.8	16.3	1612	2635	-20.3	6.2	-282.0	76.1	-4.7	-16.6	-9.4
46TH	608.00	-34.4	-1.4	1542	2635	-22.3	-.5	-249.3	59.8	-3.8	-13.2	-8.2
47TH	621.00	-33.8	12.8	1402	1465	-24.1	8.8	-214.9	61.1	-3.0	-10.2	-6.4
48TH	634.00	-33.4	9.8	1263	1465	-26.4	6.7	-181.1	48.3	-2.3	-7.6	-5.3

TABLE 7. SHEAR AND MOMENT DIAGRAMS : HOUSTON NATIONAL BANK
WIND DIRECTION 50 CONFIGURATION A REFERENCE PRESSURE 30.0 PSF GUST FACTOR 1.32

FLOOR	HEIGHT FT	X-FORCE KIPS	Y-FORCE KIPS	X-AREA SQ FT	Y-AREA SQ FT	X-PRESS PSF	Y-PRESS PSF	X-SHEAR KIPS	Y-SHEAR KIPS	X-MOMENT	Y-MOMENT	Z-MOMENT
										1000-FT-KIPS		
49TH	647.00	-32.2	7.2	1123	1465	-28.7	4.9	-147.8	38.5	-1.7	-5.5	-4.3
50TH	660.00	-28.8	6.0	983	1465	-29.3	4.1	-115.5	31.3	-1.3	-3.7	-3.5
51ST	673.00	-24.9	4.8	844	1465	-29.5	3.3	-86.7	25.3	-.9	-2.4	-2.8
52ND	686.00	-20.6	4.5	704	1465	-29.2	3.1	-61.9	20.5	-.6	-1.5	-2.2
53RD	699.00	-18.6	5.1	564	1465	-33.0	3.5	-41.3	15.9	-.4	-.8	-1.6
54TH	712.00	-12.8	5.8	424	1465	-30.1	4.0	-22.7	10.9	-.2	-.4	-1.1
55TH	725.00	-9.9	5.1	450	3718	-22.1	1.4	-9.9	5.1	-.1	-.2	-.5

TABLE 7. SHEAR AND MOMENT DIAGRAMS : HOUSTON NATIONAL BANK
WIND DIRECTION 60 CONFIGURATION A REFERENCE PRESSURE 30.0 PSF GUST FACTOR 1.32

FLOOR	HEIGHT FT	X-FORCE KIPS	Y-FORCE KIPS	X-AREA SQ FT	Y-AREA SQ FT	X-PRESS PSF	Y-PRESS PSF	X-SHEAR KIPS	Y-SHEAR KIPS	X-MOMENT 1000-FT-KIPS	Y-MOMENT 1000-FT-KIPS	Z-MOMENT 1000-FT-KIPS
GRND	0.00	-31.8	13.5	3024	3024	-10.5	4.5	-1804.5	2126.7	-779.3	-647.8	24.6
BASE	12.00	-14.4	6.7	1512	1512	-9.5	4.4	-1772.7	2113.2	-753.9	-626.3	25.9
MEZZ	18.00	-37.3	19.5	4536	4536	-8.2	4.3	-1758.3	2106.5	-741.2	-615.7	26.3
2ND	36.00	-36.8	6.0	3276	6552	-11.2	.9	-1721.0	2087.0	-703.5	-584.4	26.5
3RD	49.00	-8.3	2.2	696	1512	-11.9	1.5	-1684.2	2081.0	-676.4	-562.3	28.0
SILL	52.00	-29.0	9.6	2320	5040	-12.5	1.9	-1675.9	2078.8	-670.1	-557.3	28.3
4TH	62.00	-40.5	18.5	3016	6552	-13.4	2.8	-1647.0	2069.2	-649.4	-540.6	29.4
5TH	75.00	-45.0	14.3	3016	6552	-14.9	2.2	-1606.4	2050.7	-622.6	-519.5	30.7
6TH	88.00	-18.4	7.4	1160	2520	-15.9	2.9	-1561.5	2036.4	-596.0	-498.9	32.9
DUMY	93.00	-23.4	16.7	1483	4032	-15.8	4.1	-1543.0	2029.1	-585.9	-491.1	33.7
7TH	101.00	-35.4	35.9	2183	6552	-16.2	5.5	-1519.6	2012.3	-569.7	-478.9	33.8
8TH	114.00	-30.3	43.2	1903	6552	-15.9	6.6	-1484.2	1976.4	-543.8	-459.4	33.1
9TH	127.00	-13.9	26.3	909	3528	-15.3	7.4	-1453.9	1933.2	-518.4	-440.3	31.6
DUMY	134.00	-11.2	21.4	744	1512	-15.1	14.1	-1440.0	1907.0	-504.9	-430.1	30.5
10TH	140.00	-24.8	46.1	1612	3276	-15.4	14.1	-1428.8	1885.6	-493.6	-421.5	29.4
11TH	153.00	-25.4	45.8	1612	3276	-15.8	14.0	-1404.0	1839.5	-469.3	-403.1	27.2
12TH	166.00	-26.1	45.9	1612	3276	-16.2	14.0	-1378.6	1793.8	-445.7	-385.0	24.9
13TH	179.00	-26.7	46.0	1612	3276	-16.6	14.0	-1352.5	1747.9	-422.7	-367.3	22.6
14TH	192.00	-27.4	46.1	1612	3276	-17.0	14.1	-1325.8	1701.9	-400.3	-349.9	20.5
15TH	205.00	-28.2	46.2	1612	3276	-17.5	14.1	-1298.4	1655.8	-378.5	-332.8	18.4
16TH	218.00	-29.5	46.3	1612	3276	-18.3	14.1	-1270.2	1609.6	-357.2	-316.1	16.3
17TH	231.00	-30.8	46.4	1612	3276	-19.1	14.2	-1240.7	1563.2	-336.6	-299.8	14.4
18TH	244.00	-32.1	46.6	1612	3276	-19.9	14.2	-1209.9	1516.8	-316.6	-283.9	12.5
19TH	257.00	-33.3	46.7	1612	3276	-20.6	14.2	-1177.8	1470.2	-297.2	-268.4	10.6
20TH	270.00	-32.4	50.3	1612	3276	-20.1	15.4	-1144.6	1423.5	-278.4	-253.3	8.9
21ST	283.00	-31.4	54.2	1612	3276	-19.5	16.5	-1112.2	1373.2	-260.2	-238.6	6.9
22ND	296.00	-31.2	55.7	1612	3276	-19.4	17.0	-1080.8	1319.0	-242.7	-224.3	4.7
23RD	309.00	-31.5	57.2	1612	3276	-19.5	17.5	-1049.5	1263.3	-225.9	-210.5	2.5
24TH	322.00	-31.6	57.4	1612	3276	-19.6	17.5	-1018.0	1206.1	-209.9	-197.0	.1
25TH	335.00	-31.6	57.1	1612	3276	-19.6	17.4	-986.5	1148.6	-194.5	-184.0	-2.2
26TH	348.00	-32.4	47.4	1612	3276	-20.1	14.5	-954.8	1091.5	-180.0	-171.4	-4.4
27TH	361.00	-32.8	41.6	1612	3276	-20.4	12.7	-922.5	1044.2	-166.1	-159.2	-5.5
28TH	374.00	-27.2	51.4	1612	3276	-16.9	15.7	-889.6	1002.6	-152.8	-147.4	-6.5
29TH	387.00	-20.6	54.2	1612	3276	-12.8	16.5	-862.4	951.2	-140.1	-136.0	-8.5
30TH	400.00	-33.2	37.8	1612	3276	-20.6	11.5	-841.8	897.0	-128.1	-125.0	-10.8
31ST	413.00	-36.4	38.0	1612	3276	-22.6	11.6	-808.6	859.2	-116.7	-114.2	-10.7
32ND	426.00	-38.3	36.8	1612	2635	-23.8	13.9	-772.3	821.3	-105.7	-103.9	-10.6
33RD	439.00	-40.3	37.5	1612	2635	-25.0	14.2	-734.0	784.5	-95.3	-94.2	-10.3
34TH	452.00	-41.8	38.3	1612	2635	-25.9	14.5	-693.7	747.0	-85.4	-84.9	-10.1
35TH	465.00	-40.5	41.9	1612	2635	-25.1	15.9	-651.8	708.8	-75.9	-76.1	-10.1
36TH	478.00	-39.2	45.3	1612	2635	-24.3	17.2	-611.3	666.9	-67.0	-67.9	-10.1
37TH	491.00	-37.2	46.9	1612	2635	-23.1	17.8	-572.1	621.6	-58.6	-60.2	-10.1
38TH	504.00	-36.4	48.4	1612	2635	-22.6	18.4	-534.9	574.7	-50.8	-53.0	-10.2
39TH	517.00	-35.1	49.3	1612	2635	-21.8	18.7	-498.5	526.2	-43.6	-46.3	-10.3
40TH	530.00	-33.9	50.2	1612	2635	-21.0	19.1	-463.4	476.9	-37.1	-40.1	-10.5
41ST	543.00	-34.8	52.0	1612	2635	-21.6	19.7	-429.5	426.7	-31.3	-34.3	-10.8
42ND	556.00	-49.0	54.1	1612	2635	-30.4	20.5	-394.7	374.7	-26.0	-28.9	-11.1
43RD	569.00	-49.8	57.7	1612	2635	-30.9	21.9	-345.7	320.7	-21.5	-24.1	-12.0
44TH	582.00	-28.7	53.5	1612	2635	-17.8	20.3	-295.8	263.0	-17.7	-19.9	-13.0
45TH	595.00	-28.0	20.9	1612	2635	-17.4	7.9	-267.2	209.5	-14.7	-16.3	-13.7
46TH	608.00	-30.6	21.7	1542	2635	-19.8	8.2	-239.2	188.6	-12.1	-13.0	-12.2
47TH	621.00	-31.1	19.3	1402	1465	-22.2	13.2	-208.6	166.9	-9.8	-10.1	-10.8
48TH	634.00	-31.3	18.9	1263	1465	-24.8	12.9	-177.5	147.6	-7.7	-7.6	-9.3

TABLE 7. SHEAR AND MOMENT DIAGRAMS : HOUSTON NATIONAL BANK
WIND DIRECTION 60 CONFIGURATION A REFERENCE PRESSURE 30.0 PSF GUST FACTOR 1.32

FLOOR	HEIGHT FT	X-FORCE KIPS	Y-FORCE KIPS	X-AREA SQ FT	Y-AREA SQ FT	X-PRESS PSF	Y-PRESS PSF	X-SHEAR KIPS	Y-SHEAR KIPS	X-MOMENT	Y-MOMENT	Z-MOMENT
										1000-FT-KIPS		
49TH	647.00	-30.8	18.6	1123	1465	-27.4	12.7	-146.1	128.7	-5.9	-5.4	-7.8
50TH	660.00	-28.1	18.7	983	1465	-28.6	12.8	-115.4	110.0	-4.4	-3.7	-6.5
51ST	673.00	-24.9	18.7	844	1465	-29.5	12.8	-87.2	91.4	-3.1	-2.4	-5.2
52ND	686.00	-21.1	18.7	704	1465	-30.0	12.8	-62.4	72.6	-2.0	-1.5	-4.1
53RD	699.00	-18.1	18.8	564	1465	-32.1	12.8	-41.2	53.9	-1.2	-.8	-3.0
54TH	712.00	-13.6	19.4	424	1465	-32.1	13.2	-23.1	35.1	-.6	-.4	-1.9
55TH	725.00	-9.5	15.8	450	3718	-21.1	4.2	-9.5	15.8	-.3	-.2	-.9

TABLE 7. SHEAR AND MOMENT DIAGRAMS : HOUSTON NATIONAL BANK
WIND DIRECTION 70 CONFIGURATION A REFERENCE PRESSURE 30.0 PSF GUST FACTOR 1.32

FLOOR	HEIGHT FT	X-FORCE KIPS	Y-FORCE KIPS	X-AREA SQ FT	Y-AREA SQ FT	X-PRESS PSF	Y-PRESS PSF	X-SHEAR KIPS	Y-SHEAR KIPS	X-MOMENT 1000-FT-KIPS	Y-MOMENT 1000-FT-KIPS	Z-MOMENT 1000-FT-KIPS
GRND	0.00	-21.2	26.9	3024	3024	-7.0	8.9	-1812.9	2441.3	-870.9	-636.0	31.9
BASE	12.00	-12.4	13.5	1512	1512	-8.2	8.9	-1791.7	2414.3	-841.7	-614.3	31.6
MEZZ	18.00	-44.2	40.3	4536	4536	-9.7	8.9	-1779.3	2400.9	-827.3	-603.6	31.6
2ND	36.00	-35.8	20.5	3276	6552	-10.9	3.1	-1735.1	2360.6	-784.4	-572.0	32.1
3RD	49.00	-8.2	5.4	696	1512	-11.8	3.6	-1699.3	2340.1	-753.9	-549.7	32.8
SILL	52.00	-29.1	19.8	2320	5040	-12.5	3.9	-1691.0	2334.7	-746.9	-544.6	32.9
4TH	62.00	-40.2	30.4	3016	6552	-13.3	4.6	-1661.9	2314.9	-723.6	-527.8	33.4
5TH	75.00	-43.9	26.2	3016	6552	-14.6	4.0	-1621.7	2284.5	-693.7	-506.5	34.1
6TH	88.00	-17.9	11.3	1160	2520	-15.4	4.5	-1577.8	2258.3	-664.2	-485.7	35.4
DUMY	93.00	-24.4	21.7	1483	4032	-16.5	5.4	-1559.9	2247.0	-652.9	-477.8	35.9
7TH	101.00	-38.5	42.1	2183	6552	-17.6	6.4	-1535.5	2225.3	-635.0	-465.5	35.8
8TH	114.00	-35.0	48.1	1903	6552	-18.4	7.3	-1497.0	2183.1	-606.4	-445.8	34.9
9TH	127.00	-17.1	28.4	909	3528	-18.9	8.1	-1462.0	2135.0	-578.3	-426.5	33.5
DUMY	134.00	-14.2	23.3	744	1512	-19.1	15.4	-1444.9	2106.6	-563.5	-416.3	32.5
10TH	140.00	-31.3	50.2	1612	3276	-19.4	15.3	-1430.6	2083.2	-550.9	-407.7	31.6
11TH	153.00	-31.9	49.7	1612	3276	-19.8	15.2	-1399.3	2033.0	-524.2	-389.3	29.6
12TH	166.00	-32.5	49.8	1612	3276	-20.2	15.2	-1367.4	1983.3	-498.0	-371.3	27.5
13TH	179.00	-33.1	49.9	1612	3276	-20.5	15.2	-1334.9	1933.5	-472.6	-353.8	25.5
14TH	192.00	-33.7	50.1	1612	3276	-20.9	15.3	-1301.8	1883.5	-447.8	-336.6	23.6
15TH	205.00	-34.3	50.2	1612	3276	-21.3	15.3	-1268.1	1833.5	-423.6	-319.9	21.6
16TH	218.00	-34.7	50.3	1612	3276	-21.5	15.4	-1233.8	1783.3	-400.1	-303.7	19.7
17TH	231.00	-35.2	50.5	1612	3276	-21.8	15.4	-1199.1	1733.0	-377.3	-287.9	17.8
18TH	244.00	-35.7	50.6	1612	3276	-22.1	15.4	-1163.9	1682.5	-355.1	-272.5	16.0
19TH	257.00	-36.0	50.7	1612	3276	-22.3	15.5	-1128.2	1631.9	-333.5	-257.6	14.3
20TH	270.00	-34.3	54.4	1612	3276	-21.3	16.6	-1092.2	1581.2	-312.6	-243.2	12.6
21ST	283.00	-32.6	58.3	1612	3276	-20.2	17.8	-1058.0	1526.8	-292.4	-229.2	10.6
22ND	296.00	-32.4	59.7	1612	3276	-20.1	18.2	-1025.4	1468.6	-273.0	-215.7	8.3
23RD	309.00	-31.9	61.1	1612	3276	-19.8	18.7	-992.9	1408.9	-254.2	-202.5	6.0
24TH	322.00	-31.3	62.1	1612	3276	-19.4	19.0	-961.0	1347.7	-236.3	-189.8	3.7
25TH	335.00	-30.7	62.9	1612	3276	-19.0	19.2	-929.7	1285.6	-219.2	-177.5	1.3
26TH	348.00	-31.1	56.6	1612	3276	-19.3	17.3	-899.0	1222.8	-202.9	-165.7	-1.1
27TH	361.00	-28.8	52.9	1612	3276	-17.9	16.1	-867.9	1166.2	-187.4	-154.2	-2.9
28TH	374.00	-18.5	60.3	1612	3276	-11.5	18.4	-839.1	1113.3	-172.6	-143.1	-4.8
29TH	387.00	-14.5	60.9	1612	3276	-9.0	18.6	-820.5	1052.9	-158.5	-132.3	-7.5
30TH	400.00	-28.5	43.0	1612	3276	-17.7	13.1	-806.1	992.0	-145.2	-121.7	-10.4
31ST	413.00	-32.0	43.9	1612	3276	-19.9	13.4	-777.6	949.0	-132.6	-111.4	-10.5
32ND	426.00	-34.3	40.6	1612	2635	-21.3	15.4	-745.5	905.1	-120.5	-101.5	-10.7
33RD	439.00	-36.5	40.8	1612	2635	-22.7	15.5	-711.2	864.5	-109.0	-92.1	-10.6
34TH	452.00	-38.4	41.0	1612	2635	-23.8	15.5	-674.7	823.7	-98.0	-83.0	-10.6
35TH	465.00	-38.0	45.3	1612	2635	-23.6	17.2	-636.3	782.8	-87.6	-74.5	-10.7
36TH	478.00	-37.6	49.1	1612	2635	-23.3	18.6	-598.3	737.5	-77.7	-66.5	-10.9
37TH	491.00	-37.6	49.8	1612	2635	-23.3	18.9	-560.6	688.4	-68.5	-59.0	-11.2
38TH	504.00	-37.2	50.5	1612	2635	-23.1	19.2	-523.0	638.6	-59.8	-51.9	-11.4
39TH	517.00	-35.9	51.6	1612	2635	-22.3	19.6	-485.9	588.1	-51.9	-45.4	-11.7
40TH	530.00	-34.7	53.2	1612	2635	-21.5	20.2	-449.9	536.4	-44.5	-39.3	-12.0
41ST	543.00	-34.9	55.8	1612	2635	-21.7	21.2	-415.3	483.3	-37.9	-33.7	-12.3
42ND	556.00	-43.7	58.0	1612	2635	-27.1	22.0	-380.3	427.5	-32.0	-28.5	-12.7
43RD	569.00	-42.9	59.7	1612	2635	-26.6	22.6	-336.7	369.5	-26.8	-23.8	-13.7
44TH	582.00	-27.2	54.1	1612	2635	-16.9	20.5	-293.8	309.8	-22.4	-19.7	-14.7
45TH	595.00	-29.2	22.5	1612	2635	-18.1	8.5	-266.6	255.7	-18.7	-16.1	-15.3
46TH	608.00	-31.2	25.6	1542	2635	-20.2	9.7	-237.3	233.2	-15.5	-12.8	-13.6
47TH	621.00	-31.0	20.9	1402	1465	-22.1	14.3	-206.1	207.7	-12.7	-9.9	-12.1
48TH	634.00	-30.8	21.2	1263	1465	-24.4	14.5	-175.1	186.7	-10.1	-7.4	-10.4

TABLE 7. SHEAR AND MOMENT DIAGRAMS : HOUSTON NATIONAL BANK
WIND DIRECTION 70 CONFIGURATION A REFERENCE PRESSURE 30.0 PSF GUST FACTOR 1.32

FLOOR	HEIGHT FT	X-FORCE KIPS	Y-FORCE KIPS	X-AREA SQ FT	Y-AREA SQ FT	X-PRESS PSF	Y-PRESS PSF	X-SHEAR KIPS	Y-SHEAR KIPS	X-MOMENT	Y-MOMENT	Z-MOMENT
										1000-FT-KIPS		
49TH	647.00	-29.9	21.7	1123	1465	-26.6	14.8	-144.3	165.5	-7.8	-5.4	-8.8
50TH	660.00	-27.5	22.7	983	1465	-28.0	15.5	-114.5	143.8	-5.8	-3.7	-7.4
51ST	673.00	-24.6	23.7	844	1465	-29.1	16.2	-87.0	121.1	-4.1	-2.4	-6.1
52ND	686.00	-21.1	24.7	704	1465	-29.9	16.9	-62.4	97.5	-2.7	-1.4	-4.8
53RD	699.00	-18.7	25.7	564	1465	-33.2	17.5	-41.3	72.7	-1.6	-.7	-3.5
54TH	712.00	-15.1	26.1	424	1465	-35.6	17.8	-22.6	47.1	-.8	-.2	-2.2
55TH	725.00	-7.5	21.0	450	3718	-16.6	5.6	-7.5	21.0	-.3	-.1	-1.0

TABLE 7. SHEAR AND MOMENT DIAGRAMS : HOUSTON NATIONAL BANK
WIND DIRECTION 80 CONFIGURATION A REFERENCE PRESSURE 30.0 PSF GUST FACTOR 1.32

FLOOR	HEIGHT FT	X-FORCE KIPS	Y-FORCE KIPS	X-AREA SQ FT	Y-AREA SQ FT	X-PRESS PSF	Y-PRESS PSF	X-SHEAR KIPS	Y-SHEAR KIPS	X-MOMENT 1000-FT-KIPS	Y-MOMENT 1000-FT-KIPS	Z-MOMENT 1000-FT-KIPS
GRND	0.00	-17.7	28.5	3024	3024	-5.8	9.4	-1629.1	2223.5	-782.2	-574.3	21.2
BASE	12.00	-10.0	14.3	1512	1512	-6.6	9.5	-1611.4	2195.0	-755.7	-554.8	21.1
MEZZ	18.00	-34.9	43.0	4536	4536	-7.7	9.5	-1601.4	2180.7	-742.6	-545.2	21.1
2ND	36.00	-32.4	23.9	3276	6552	-9.9	3.6	-1566.5	2137.7	-703.7	-516.7	21.6
3RD	49.00	-7.2	6.0	696	1512	-10.3	4.0	-1534.1	2113.9	-676.1	-496.5	22.9
SILL	52.00	-24.6	21.2	2320	5040	-10.6	4.2	-1527.0	2107.9	-669.8	-491.9	23.1
4TH	62.00	-32.0	30.9	3016	6552	-10.6	4.7	-1502.4	2086.7	-648.8	-476.8	23.7
5TH	75.00	-34.8	30.5	3016	6552	-11.5	4.7	-1470.3	2055.8	-621.9	-457.4	24.0
6TH	88.00	-14.1	12.8	1160	2520	-12.2	5.1	-1435.5	2025.3	-595.3	-438.6	24.7
DUMY	93.00	-20.0	22.8	1483	4032	-13.5	5.7	-1421.4	2012.5	-585.2	-431.4	25.0
7TH	101.00	-31.8	40.4	2183	6552	-14.6	6.2	-1401.4	1989.7	-569.2	-420.1	25.0
8TH	114.00	-30.0	41.8	1903	6552	-15.7	6.4	-1369.7	1949.3	-543.6	-402.1	24.5
9TH	127.00	-15.2	23.1	909	3528	-16.7	6.5	-1339.7	1907.5	-518.6	-384.5	23.7
DUMY	134.00	-12.8	19.7	744	1512	-17.2	13.0	-1324.5	1884.4	-505.3	-375.2	23.1
10TH	140.00	-28.5	42.8	1612	3276	-17.7	13.1	-1311.7	1864.6	-494.0	-367.3	22.6
11TH	153.00	-29.5	42.8	1612	3276	-18.3	13.1	-1283.2	1821.9	-470.1	-350.4	21.4
12TH	166.00	-30.5	43.3	1612	3276	-18.9	13.2	-1253.7	1779.0	-446.7	-333.9	20.2
13TH	179.00	-31.4	43.7	1612	3276	-19.5	13.3	-1223.2	1735.8	-423.8	-317.8	18.9
14TH	192.00	-32.4	44.1	1612	3276	-20.1	13.5	-1191.7	1692.1	-401.5	-302.1	17.6
15TH	205.00	-33.2	44.6	1612	3276	-20.6	13.6	-1159.3	1647.9	-379.8	-286.8	16.2
16TH	218.00	-33.6	45.0	1612	3276	-20.8	13.7	-1126.1	1603.4	-358.7	-272.0	14.8
17TH	231.00	-33.9	45.5	1612	3276	-21.0	13.9	-1092.5	1558.3	-338.1	-257.6	13.4
18TH	244.00	-34.2	45.9	1612	3276	-21.2	14.0	-1058.6	1512.8	-318.2	-243.6	12.0
19TH	257.00	-34.4	46.4	1612	3276	-21.4	14.2	-1024.4	1466.9	-298.8	-230.0	10.7
20TH	270.00	-33.2	49.2	1612	3276	-20.6	15.0	-990.0	1420.5	-280.0	-216.9	9.3
21ST	283.00	-31.9	52.1	1612	3276	-19.8	15.9	-956.8	1371.3	-261.9	-204.3	7.6
22ND	296.00	-32.6	53.0	1612	3276	-20.2	16.2	-924.9	1319.2	-244.4	-192.1	5.7
23RD	309.00	-31.6	54.0	1612	3276	-19.6	16.5	-892.3	1266.1	-227.6	-180.2	3.8
24TH	322.00	-30.3	54.7	1612	3276	-18.8	16.7	-860.7	1212.2	-211.5	-168.9	1.9
25TH	335.00	-28.9	55.3	1612	3276	-17.9	16.9	-830.4	1157.5	-196.1	-157.9	.0
26TH	348.00	-28.1	49.3	1612	3276	-17.4	15.1	-801.6	1102.1	-181.4	-147.3	-1.9
27TH	361.00	-18.5	46.1	1612	3276	-11.5	14.1	-773.5	1052.8	-167.4	-137.0	-3.1
28TH	374.00	-6.4	54.2	1612	3276	-4.0	16.5	-754.9	1006.6	-154.0	-127.1	-4.6
29TH	387.00	-14.1	55.7	1612	3276	-8.7	17.0	-748.5	952.4	-141.3	-117.3	-7.1
30TH	400.00	-29.7	39.4	1612	3276	-18.4	12.0	-734.4	896.7	-129.3	-107.7	-9.6
31ST	413.00	-32.4	41.1	1612	3276	-20.1	12.6	-704.7	857.3	-117.9	-98.3	-9.7
32ND	426.00	-33.7	38.0	1612	2635	-20.9	14.4	-672.4	816.2	-107.0	-89.4	-9.9
33RD	439.00	-35.1	38.5	1612	2635	-21.8	14.6	-638.6	778.2	-96.6	-80.8	-9.8
34TH	452.00	-36.1	39.1	1612	2635	-22.4	14.8	-603.6	739.7	-86.8	-72.8	-9.8
35TH	465.00	-35.4	42.6	1612	2635	-22.0	16.2	-567.5	700.6	-77.4	-65.2	-10.0
36TH	478.00	-34.8	45.5	1612	2635	-21.6	17.3	-532.0	658.0	-68.6	-58.0	-10.2
37TH	491.00	-34.2	46.2	1612	2635	-21.2	17.5	-497.3	612.5	-60.3	-51.3	-10.4
38TH	504.00	-34.0	46.8	1612	2635	-21.1	17.8	-463.1	566.3	-52.6	-45.1	-10.7
39TH	517.00	-33.8	47.6	1612	2635	-21.0	18.1	-429.1	519.4	-45.6	-39.3	-10.9
40TH	530.00	-33.7	48.5	1612	2635	-20.9	18.4	-395.3	471.9	-39.1	-33.9	-11.1
41ST	543.00	-34.0	49.7	1612	2635	-21.1	18.9	-361.7	423.4	-33.3	-29.0	-11.2
42ND	556.00	-36.0	50.6	1612	2635	-22.3	19.2	-327.6	373.6	-28.1	-24.5	-11.4
43RD	569.00	-33.1	51.6	1612	2635	-20.5	19.6	-291.7	323.0	-23.6	-20.5	-12.2
44TH	582.00	-23.2	46.5	1612	2635	-14.4	17.6	-258.6	271.4	-19.7	-16.9	-13.1
45TH	595.00	-28.5	19.2	1612	2635	-17.7	7.3	-235.4	224.9	-16.5	-13.7	-13.6
46TH	608.00	-29.5	20.9	1542	2635	-19.1	7.9	-206.9	205.7	-13.7	-10.8	-12.1
47TH	621.00	-28.3	18.7	1402	1465	-20.2	12.8	-177.4	184.8	-11.2	-8.3	-10.7
48TH	634.00	-27.3	19.4	1263	1465	-21.6	13.2	-149.1	166.1	-8.9	-6.2	-9.2

TABLE 7. SHEAR AND MOMENT DIAGRAMS : HOUSTON NATIONAL BANK
WIND DIRECTION 80 CONFIGURATION A REFERENCE PRESSURE 30.0 PSF GUST FACTOR 1.32

FLOOR	HEIGHT FT	X-FORCE KIPS	Y-FORCE KIPS	X-AREA SQ FT	Y-AREA SQ FT	X-PRESS PSF	Y-PRESS PSF	X-SHEAR KIPS	Y-SHEAR KIPS	X-MOMENT	Y-MOMENT	Z-MOMENT
										1000-FT-KIPS		
49TH	647.00	-25.9	20.0	1123	1465	-23.1	13.6	-121.7	146.7	-6.9	-4.4	-7.8
50TH	660.00	-23.6	20.5	983	1465	-24.0	14.0	-95.8	126.8	-5.1	-3.0	-6.5
51ST	673.00	-20.8	21.1	844	1465	-24.7	14.4	-72.2	106.2	-3.6	-1.9	-5.3
52ND	686.00	-17.7	21.7	704	1465	-25.2	14.8	-51.4	85.1	-2.3	-1.1	-4.2
53RD	699.00	-15.5	22.2	564	1465	-27.4	15.2	-33.7	63.4	-1.4	-.6	-3.0
54TH	712.00	-12.5	22.8	424	1465	-29.4	15.5	-18.2	41.2	-.7	-.2	-2.0
55TH	725.00	-5.7	18.4	450	3718	-12.7	4.9	-5.7	18.4	-.3	-.1	-.9

TABLE 7. SHEAR AND MOMENT DIAGRAMS : HOUSTON NATIONAL BANK
WIND DIRECTION 90 CONFIGURATION A REFERENCE PRESSURE 30.0 PSF GUST FACTOR 1.32

FLOOR	HEIGHT FT	X-FORCE KIPS	Y-FORCE KIPS	X-AREA SQ FT	Y-AREA SQ FT	X-PRESS PSF	Y-PRESS PSF	X-SHEAR KIPS	Y-SHEAR KIPS	X-MOMENT 1000-FT-KIPS	Y-MOMENT 1000-FT-KIPS	Z-MOMENT 1000-FT-KIPS
GRND	0.00	-13.2	21.8	3024	3024	-4.4	7.2	-1058.4	1887.4	-736.7	-377.1	1.2
BASE	12.00	-7.1	10.8	1512	1512	-4.7	7.2	-1045.2	1865.6	-714.2	-364.5	1.3
MEZZ	18.00	-23.2	32.2	4536	4536	-5.1	7.1	-1038.1	1854.8	-703.0	-358.2	1.4
2ND	36.00	-23.6	18.5	3276	6552	-7.2	2.8	-1014.8	1822.6	-669.9	-339.7	1.8
3RD	49.00	-4.9	4.6	696	1512	-7.0	3.1	-991.2	1804.2	-646.3	-326.7	3.0
SILL	52.00	-15.8	16.4	2320	5040	-6.8	3.2	-986.4	1799.5	-640.9	-323.7	3.2
4TH	62.00	-19.2	24.6	3016	6552	-6.4	3.8	-970.6	1783.2	-623.0	-313.9	3.6
5TH	75.00	-19.9	27.7	3016	6552	-6.6	4.2	-951.3	1758.6	-600.0	-301.5	3.8
6TH	88.00	-7.8	11.1	1160	2520	-6.8	4.4	-931.4	1730.9	-577.3	-289.2	3.9
DUMY	93.00	-11.5	18.4	1483	4032	-7.8	4.6	-923.6	1719.8	-568.7	-284.6	4.0
7TH	101.00	-18.5	30.1	2183	6552	-8.5	4.6	-912.1	1701.4	-555.0	-277.2	3.8
8TH	114.00	-18.3	28.6	1903	6552	-9.6	4.4	-893.6	1671.3	-533.1	-265.5	3.4
9TH	127.00	-9.8	14.8	909	3528	-10.8	4.2	-875.3	1642.7	-511.5	-254.0	3.0
DUMY	134.00	-8.5	13.1	744	1512	-11.4	8.7	-865.4	1627.9	-500.1	-247.9	2.7
10TH	140.00	-18.8	28.5	1612	3276	-11.7	8.7	-856.9	1614.7	-490.4	-242.7	2.4
11TH	153.00	-19.3	28.5	1612	3276	-12.0	8.7	-838.1	1586.2	-469.6	-231.7	1.8
12TH	166.00	-19.9	28.8	1612	3276	-12.3	8.8	-818.8	1557.7	-449.1	-220.9	1.2
13TH	179.00	-20.4	29.0	1612	3276	-12.7	8.8	-798.9	1528.9	-429.1	-210.4	.6
14TH	192.00	-20.9	29.2	1612	3276	-13.0	8.9	-778.5	1499.9	-409.4	-200.2	-.1
15TH	205.00	-21.4	29.4	1612	3276	-13.3	9.0	-757.6	1470.7	-390.1	-190.2	-.8
16TH	218.00	-21.7	29.7	1612	3276	-13.5	9.1	-736.2	1441.3	-371.1	-180.5	-1.5
17TH	231.00	-22.0	29.9	1612	3276	-13.6	9.1	-714.5	1411.6	-352.6	-171.1	-2.2
18TH	244.00	-22.2	30.1	1612	3276	-13.8	9.2	-692.6	1381.7	-334.4	-161.9	-3.0
19TH	257.00	-22.4	30.4	1612	3276	-13.9	9.3	-670.3	1351.6	-316.7	-153.1	-3.7
20TH	270.00	-20.5	32.0	1612	3276	-12.7	9.8	-648.0	1321.2	-299.3	-144.5	-4.5
21ST	283.00	-18.7	33.9	1612	3276	-11.6	10.3	-627.4	1289.3	-282.3	-136.2	-5.4
22ND	296.00	-19.2	35.2	1612	3276	-11.9	10.7	-608.8	1255.4	-265.8	-128.2	-6.5
23RD	309.00	-18.6	36.4	1612	3276	-11.5	11.1	-589.5	1220.2	-249.7	-120.4	-7.6
24TH	322.00	-18.9	37.6	1612	3276	-11.7	11.5	-570.9	1183.8	-234.1	-112.8	-8.7
25TH	335.00	-19.2	38.6	1612	3276	-11.9	11.8	-552.0	1146.2	-218.9	-105.5	-9.8
26TH	348.00	-18.7	36.9	1612	3276	-11.6	11.3	-532.8	1107.6	-204.3	-98.5	-11.0
27TH	361.00	-6.9	36.7	1612	3276	-4.3	11.2	-514.1	1070.6	-190.1	-91.7	-11.9
28TH	374.00	-.4	41.7	1612	3276	-.2	12.7	-507.2	1034.0	-176.4	-85.0	-13.1
29TH	387.00	-8.7	42.6	1612	3276	-5.4	13.0	-506.8	992.3	-163.3	-78.4	-14.7
30TH	400.00	-22.4	32.8	1612	3276	-13.9	10.0	-498.1	949.7	-150.6	-71.9	-16.4
31ST	413.00	-23.8	34.9	1612	3276	-14.7	10.7	-475.7	916.9	-138.5	-65.6	-16.4
32ND	426.00	-23.8	33.1	1612	2635	-14.8	12.6	-451.9	882.0	-126.8	-59.5	-16.6
33RD	439.00	-23.8	34.1	1612	2635	-14.8	12.9	-428.1	848.9	-115.6	-53.8	-16.5
34TH	452.00	-23.7	35.1	1612	2635	-14.7	13.3	-404.3	814.8	-104.7	-48.4	-16.5
35TH	465.00	-22.9	38.7	1612	2635	-14.2	14.7	-380.6	779.7	-94.4	-43.3	-16.6
36TH	478.00	-22.2	42.0	1612	2635	-13.8	15.9	-357.7	741.0	-84.5	-38.5	-16.7
37TH	491.00	-24.0	43.5	1612	2635	-14.9	16.5	-335.5	699.0	-75.1	-34.0	-16.8
38TH	504.00	-24.1	45.0	1612	2635	-14.9	17.1	-311.4	655.5	-66.3	-29.8	-16.7
39TH	517.00	-24.4	46.6	1612	2635	-15.1	17.7	-287.3	610.5	-58.1	-25.9	-16.6
40TH	530.00	-24.7	48.3	1612	2635	-15.3	18.3	-262.9	563.9	-50.5	-22.3	-16.4
41ST	543.00	-24.8	49.6	1612	2635	-15.4	18.8	-238.2	515.6	-43.5	-19.1	-16.1
42ND	556.00	-20.6	50.5	1612	2635	-12.8	19.2	-213.4	466.0	-37.1	-16.1	-15.8
43RD	569.00	-15.8	51.1	1612	2635	-9.8	19.4	-192.8	415.5	-31.3	-13.5	-15.9
44TH	582.00	-15.4	47.0	1612	2635	-9.6	17.8	-176.9	364.4	-26.3	-11.1	-16.1
45TH	595.00	-22.6	26.2	1612	2635	-14.0	9.9	-161.5	317.4	-21.8	-8.9	-15.9
46TH	608.00	-22.4	44.3	1542	2635	-14.5	16.8	-139.0	291.2	-17.9	-7.0	-14.3
47TH	621.00	-20.5	27.5	1402	1465	-14.6	18.8	-116.5	246.9	-14.4	-5.3	-13.5
48TH	634.00	-18.7	27.8	1263	1465	-14.8	19.0	-96.1	219.4	-11.4	-3.9	-11.7

TABLE 7. SHEAR AND MOMENT DIAGRAMS : HOUSTON NATIONAL BANK
WIND DIRECTION 90 CONFIGURATION A REFERENCE PRESSURE 30.0 PSF GUST FACTOR 1.32

FLOOR	HEIGHT FT	X-FORCE KIPS	Y-FORCE KIPS	X-AREA SQ FT	Y-AREA SQ FT	X-PRESS PSF	Y-PRESS PSF	X-SHEAR KIPS	Y-SHEAR KIPS	X-MOMENT	Y-MOMENT	Z-MOMENT
										1000-FT-KIPS		
49TH	647.00	-17.0	28.0	1123	1465	-15.1	19.1	-77.4	191.6	-8.7	-2.8	-10.1
50TH	660.00	-15.3	28.2	983	1465	-15.6	19.3	-60.4	163.6	-6.4	-1.9	-8.5
51ST	673.00	-13.4	28.5	844	1465	-15.9	19.4	-45.1	135.3	-4.4	-1.2	-7.0
52ND	686.00	-11.3	28.6	704	1465	-16.0	19.5	-31.7	106.9	-2.9	-.7	-5.5
53RD	699.00	-9.6	28.6	564	1465	-17.1	19.5	-20.4	78.3	-1.7	-.4	-4.0
54TH	712.00	-6.9	28.0	424	1465	-16.3	19.1	-10.8	49.7	-.8	-.2	-2.6
55TH	725.00	-3.9	21.7	450	3718	-8.6	5.8	-3.9	21.7	-.4	-.1	-1.1

TABLE 7. SHEAR AND MOMENT DIAGRAMS : HOUSTON NATIONAL BANK
WIND DIRECTION 100 CONFIGURATION A REFERENCE PRESSURE 30.0 PSF GUST FACTOR 1.32

FLOOR	HEIGHT FT	X-FORCE KIPS	Y-FORCE KIPS	X-AREA SQ FT	Y-AREA SQ FT	X-PRESS PSF	Y-PRESS PSF	X-SHEAR KIPS	Y-SHEAR KIPS	X-MOMENT 1000-FT-KIPS	Y-MOMENT 1000-FT-KIPS	Z-MOMENT 1000-FT-KIPS
GRND	0.00	-7.5	20.5	3024	3024	-2.5	6.8	-702.9	2358.3	-1017.3	-255.1	-21.1
BASE	12.00	-3.7	10.1	1512	1512	-2.5	6.7	-695.4	2337.9	-989.2	-246.7	-20.9
MEZZ	18.00	-11.2	30.0	4536	4536	-2.5	6.6	-691.6	2327.7	-975.2	-242.5	-20.8
2ND	36.00	-14.5	20.4	3276	6552	-4.4	3.1	-680.4	2297.7	-933.5	-230.2	-20.6
3RD	49.00	-2.7	4.9	696	1512	-3.9	3.2	-666.0	2277.3	-903.8	-221.4	-19.7
SILL	52.00	-7.9	16.8	2320	5040	-3.4	3.3	-663.3	2272.4	-897.0	-219.5	-19.6
4TH	62.00	-8.8	23.6	3016	6552	-2.9	3.6	-655.3	2255.6	-874.3	-212.9	-19.4
5TH	75.00	-9.6	24.0	3016	6552	-3.2	3.7	-646.5	2232.0	-845.2	-204.4	-19.3
6TH	88.00	-3.9	8.7	1160	2520	-3.4	3.5	-636.9	2207.9	-816.3	-196.1	-19.2
DUMY	93.00	-6.5	13.7	1483	4032	-4.4	3.4	-633.0	2199.2	-805.3	-192.9	-19.2
7TH	101.00	-11.2	23.3	2183	6552	-5.1	3.6	-626.5	2185.5	-787.7	-187.8	-19.2
8TH	114.00	-11.6	29.0	1903	6552	-6.1	4.4	-615.3	2162.2	-759.5	-179.8	-19.2
9TH	127.00	-6.3	18.0	909	3528	-6.9	5.1	-603.8	2133.2	-731.6	-171.8	-19.3
DUMY	134.00	-5.4	13.6	744	1512	-7.3	9.0	-597.5	2115.2	-716.7	-167.6	-19.3
10TH	140.00	-12.0	28.5	1612	3276	-7.5	8.7	-592.0	2101.7	-704.0	-164.1	-19.4
11TH	153.00	-12.3	27.4	1612	3276	-7.6	8.4	-580.0	2073.1	-676.9	-156.5	-19.6
12TH	166.00	-12.6	27.3	1612	3276	-7.8	8.3	-567.7	2045.8	-650.1	-149.0	-19.8
13TH	179.00	-12.9	27.3	1612	3276	-8.0	8.3	-555.1	2018.4	-623.7	-141.7	-20.0
14TH	192.00	-13.2	27.3	1612	3276	-8.2	8.3	-542.1	1991.1	-597.7	-134.6	-20.2
15TH	205.00	-13.5	27.3	1612	3276	-8.4	8.3	-528.9	1963.8	-571.9	-127.6	-20.5
16TH	218.00	-13.8	27.3	1612	3276	-8.6	8.3	-515.4	1936.5	-546.6	-120.8	-20.8
17TH	231.00	-14.1	27.3	1612	3276	-8.7	8.3	-501.6	1909.2	-521.6	-114.2	-21.1
18TH	244.00	-14.4	27.3	1612	3276	-8.9	8.3	-487.5	1881.9	-497.0	-107.8	-21.4
19TH	257.00	-14.5	27.3	1612	3276	-9.0	8.3	-473.1	1854.7	-472.7	-101.5	-21.7
20TH	270.00	-12.1	29.4	1612	3276	-7.5	9.0	-458.6	1827.4	-448.7	-95.5	-22.0
21ST	283.00	-9.7	32.1	1612	3276	-6.0	9.8	-446.6	1798.0	-425.2	-89.6	-22.5
22ND	296.00	-12.0	34.3	1612	3276	-7.4	10.5	-436.9	1765.9	-402.0	-83.9	-23.2
23RD	309.00	-12.2	36.5	1612	3276	-7.6	11.1	-424.9	1731.6	-379.3	-78.2	-23.7
24TH	322.00	-14.4	38.4	1612	3276	-8.9	11.7	-412.7	1695.1	-357.0	-72.8	-24.4
25TH	335.00	-16.5	40.1	1612	3276	-10.2	12.2	-398.3	1656.8	-335.2	-67.5	-25.1
26TH	348.00	-16.7	41.5	1612	3276	-10.4	12.7	-381.8	1616.7	-313.9	-62.5	-25.7
27TH	361.00	-2.3	43.8	1612	3276	-1.4	13.4	-365.0	1575.2	-293.2	-57.6	-26.4
28TH	374.00	.9	48.6	1612	3276	.5	14.8	-362.8	1531.4	-273.0	-52.9	-27.6
29TH	387.00	-8.9	50.1	1612	3276	-5.5	15.3	-363.6	1482.8	-253.4	-48.2	-29.0
30TH	400.00	-24.2	42.5	1612	3276	-15.0	13.0	-354.8	1432.8	-234.4	-43.5	-30.3
31ST	413.00	-23.8	46.7	1612	3276	-14.8	14.3	-330.5	1390.3	-216.1	-39.0	-30.2
32ND	426.00	-21.9	46.0	1612	2635	-13.6	17.4	-306.7	1343.6	-198.3	-34.9	-30.3
33RD	439.00	-19.9	48.5	1612	2635	-12.4	18.4	-284.8	1297.7	-181.2	-31.0	-30.2
34TH	452.00	-18.0	51.1	1612	2635	-11.2	19.4	-264.9	1249.1	-164.6	-27.5	-30.2
35TH	465.00	-16.0	57.0	1612	2635	-9.9	21.6	-246.9	1198.0	-148.7	-24.1	-30.3
36TH	478.00	-14.0	62.2	1612	2635	-8.7	23.6	-230.9	1141.0	-133.5	-21.0	-30.5
37TH	491.00	-20.0	64.7	1612	2635	-12.4	24.6	-216.9	1078.9	-119.1	-18.1	-30.6
38TH	504.00	-20.2	67.3	1612	2635	-12.5	25.5	-196.9	1014.2	-105.5	-15.4	-30.2
39TH	517.00	-21.6	69.8	1612	2635	-13.4	26.5	-176.7	946.9	-92.7	-13.0	-29.7
40TH	530.00	-23.0	72.0	1612	2635	-14.3	27.3	-155.1	877.1	-80.9	-10.9	-28.9
41ST	543.00	-22.0	72.2	1612	2635	-13.7	27.4	-132.1	805.1	-69.9	-9.0	-28.0
42ND	556.00	-6.3	72.2	1612	2635	-3.9	27.4	-110.0	732.9	-59.9	-7.4	-27.0
43RD	569.00	-1.7	72.2	1612	2635	-1.1	27.4	-103.7	660.7	-50.9	-6.0	-26.4
44TH	582.00	-7.5	67.1	1612	2635	-4.6	25.5	-102.0	588.5	-42.7	-4.7	-25.8
45TH	595.00	-22.9	43.8	1612	2635	-14.2	16.6	-94.5	521.4	-35.5	-3.4	-24.8
46TH	608.00	-20.6	77.6	1542	2635	-13.3	29.5	-71.6	477.6	-29.0	-2.3	-22.4
47TH	621.00	-15.9	45.4	1402	1465	-11.3	31.0	-51.0	400.0	-23.3	-1.5	-21.4
48TH	634.00	-11.8	45.3	1263	1465	-9.4	30.9	-35.1	354.6	-18.4	-1.0	-18.9

TABLE 7. SHEAR AND MOMENT DIAGRAMS : HOUSTON NATIONAL BANK
WIND DIRECTION 100 CONFIGURATION A REFERENCE PRESSURE 30.0 PSF GUST FACTOR 1.32

FLOOR	HEIGHT FT	X-FORCE KIPS	Y-FORCE KIPS	X-AREA SQ FT	Y-AREA SQ FT	X-PRESS PSF	Y-PRESS PSF	X-SHEAR KIPS	Y-SHEAR KIPS	X-MOMENT	Y-MOMENT	Z-MOMENT
										1000-FT-KIPS		
49TH	647.00	-8.6	45.3	1123	1465	-7.6	30.9	-23.3	309.3	-14.1	-.6	-16.4
50TH	660.00	-6.2	45.2	983	1465	-6.3	30.9	-14.7	264.1	-10.4	-.3	-14.0
51ST	673.00	-4.0	45.1	844	1465	-4.8	30.8	-8.5	218.9	-7.2	-.2	-11.7
52ND	686.00	-2.2	45.5	704	1465	-3.2	31.1	-4.5	173.7	-4.7	-.1	-9.3
53RD	699.00	-1.7	46.2	564	1465	-2.9	31.6	-2.3	128.2	-2.7	-.1	-6.9
54TH	712.00	1.4	46.0	424	1465	3.2	31.4	-.6	82.0	-1.4	-.0	-4.4
55TH	725.00	-2.0	36.1	450	3718	-4.4	9.7	-2.0	36.1	-.6	-.0	-2.0

TABLE 7. SHEAR AND MOMENT DIAGRAMS : HOUSTON NATIONAL BANK
WIND DIRECTION 110 CONFIGURATION A REFERENCE PRESSURE 30.0 PSF GUST FACTOR 1.32

FLOOR	HEIGHT FT	X-FORCE KIPS	Y-FORCE KIPS	X-AREA SQ FT	Y-AREA SQ FT	X-PRESS PSF	Y-PRESS PSF	X-SHEAR KIPS	Y-SHEAR KIPS	X-MOMENT 1000-FT-KIPS	Y-MOMENT 1000-FT-KIPS	Z-MOMENT 1000-FT-KIPS
GRND	0.00	-2.0	23.0	3024	3024	-.7	7.6	-411.9	2964.4	-1298.6	-182.2	-34.8
BASE	12.00	-1.6	11.4	1512	1512	-1.1	7.6	-409.9	2941.4	-1263.1	-177.2	-34.7
MEZZ	18.00	-7.4	34.0	4536	4536	-1.6	7.5	-408.3	2930.0	-1245.5	-174.8	-34.6
2ND	36.00	-9.6	19.1	3276	6552	-2.9	2.9	-400.9	2895.9	-1193.1	-167.5	-34.0
3RD	49.00	-1.3	4.9	696	1512	-1.9	3.2	-391.2	2876.8	-1155.6	-162.4	-33.2
SILL	52.00	-2.5	17.4	2320	5040	-1.1	3.4	-389.9	2872.0	-1147.0	-161.2	-33.1
4TH	62.00	-.4	25.3	3016	6552	-.1	3.9	-387.4	2854.6	-1118.3	-157.3	-33.1
5TH	75.00	-.3	28.0	3016	6552	-.1	4.3	-386.9	2829.3	-1081.4	-152.3	-33.6
6TH	88.00	-.1	9.7	1160	2520	-.1	3.8	-386.6	2801.2	-1044.8	-147.2	-34.2
DUMY	93.00	-1.6	14.2	1483	4032	-1.1	3.5	-386.5	2791.5	-1030.8	-145.3	-34.4
7TH	101.00	-3.6	24.2	2183	6552	-1.6	3.7	-385.0	2777.4	-1008.5	-142.2	-34.6
8TH	114.00	-4.6	36.8	1903	6552	-2.4	5.6	-381.4	2753.1	-972.6	-137.2	-34.7
9TH	127.00	-2.9	25.1	909	3528	-3.2	7.1	-376.8	2716.3	-937.0	-132.3	-35.0
DUMY	134.00	-2.5	17.6	744	1512	-3.4	11.6	-373.9	2691.2	-918.1	-129.7	-35.2
10TH	140.00	-5.1	36.4	1612	3276	-3.2	11.1	-371.4	2673.7	-902.0	-127.4	-35.3
11TH	153.00	-4.6	34.2	1612	3276	-2.8	10.4	-366.3	2637.2	-867.5	-122.7	-35.5
12TH	166.00	-4.1	33.7	1612	3276	-2.5	10.3	-361.7	2603.1	-833.4	-117.9	-35.7
13TH	179.00	-3.5	33.2	1612	3276	-2.2	10.1	-357.6	2569.4	-799.8	-113.2	-35.9
14TH	192.00	-3.0	32.8	1612	3276	-1.9	10.0	-354.1	2536.2	-766.6	-108.6	-36.0
15TH	205.00	-2.7	32.3	1612	3276	-1.7	9.9	-351.1	2503.4	-733.9	-104.0	-36.2
16TH	218.00	-2.8	31.9	1612	3276	-1.8	9.7	-348.4	2471.1	-701.5	-99.5	-36.3
17TH	231.00	-3.0	31.4	1612	3276	-1.9	9.6	-345.6	2439.2	-669.6	-95.0	-36.4
18TH	244.00	-3.2	31.0	1612	3276	-2.0	9.5	-342.5	2407.7	-638.1	-90.5	-36.4
19TH	257.00	-3.2	30.6	1612	3276	-2.0	9.3	-339.3	2376.7	-607.0	-86.1	-36.4
20TH	270.00	-.7	34.7	1612	3276	-.4	10.6	-336.1	2346.2	-576.3	-81.7	-36.3
21ST	283.00	1.8	39.8	1612	3276	1.1	12.1	-335.4	2311.5	-546.0	-77.3	-36.6
22ND	296.00	-2.1	43.5	1612	3276	-1.3	13.3	-337.2	2271.7	-516.2	-72.9	-37.2
23RD	309.00	-3.0	47.2	1612	3276	-1.8	14.4	-335.1	2228.3	-487.0	-68.6	-37.7
24TH	322.00	-6.1	50.0	1612	3276	-3.8	15.3	-332.1	2181.1	-458.3	-64.2	-38.4
25TH	335.00	-9.3	52.4	1612	3276	-5.7	16.0	-326.0	2131.1	-430.3	-60.0	-39.1
26TH	348.00	-10.1	54.4	1612	3276	-6.3	16.6	-316.7	2078.7	-402.9	-55.8	-39.7
27TH	361.00	4.3	57.6	1612	3276	2.7	17.6	-306.6	2024.2	-376.3	-51.7	-40.4
28TH	374.00	6.3	63.5	1612	3276	3.9	19.4	-310.9	1966.7	-350.3	-47.7	-41.5
29TH	387.00	-1.7	65.3	1612	3276	-1.1	19.9	-317.1	1903.1	-325.2	-43.6	-42.9
30TH	400.00	-19.3	55.5	1612	3276	-12.0	16.9	-315.4	1837.9	-300.9	-39.5	-44.1
31ST	413.00	-19.0	60.5	1612	3276	-11.8	18.5	-296.2	1782.4	-277.3	-35.5	-43.6
32ND	426.00	-16.8	59.6	1612	2635	-10.4	22.6	-277.2	1721.9	-254.5	-31.8	-43.4
33RD	439.00	-14.6	62.7	1612	2635	-9.1	23.8	-260.4	1662.3	-232.5	-28.3	-42.8
34TH	452.00	-12.5	65.9	1612	2635	-7.8	25.0	-245.8	1599.6	-211.3	-25.0	-42.4
35TH	465.00	-10.5	73.0	1612	2635	-6.5	27.7	-233.3	1533.7	-191.0	-21.9	-42.0
36TH	478.00	-8.7	79.1	1612	2635	-5.4	30.0	-222.7	1460.7	-171.5	-19.0	-41.8
37TH	491.00	-17.0	81.8	1612	2635	-10.5	31.0	-214.1	1381.6	-153.0	-16.1	-41.6
38TH	504.00	-18.2	84.4	1612	2635	-11.3	32.0	-197.1	1299.9	-135.6	-13.4	-40.8
39TH	517.00	-22.0	87.0	1612	2635	-13.7	33.0	-178.9	1215.4	-119.3	-11.0	-39.8
40TH	530.00	-25.8	89.4	1612	2635	-16.0	33.9	-156.8	1128.4	-104.0	-8.8	-38.5
41ST	543.00	-26.2	90.7	1612	2635	-16.2	34.4	-131.0	1039.0	-89.9	-6.9	-37.0
42ND	556.00	-8.0	91.9	1612	2635	-5.0	34.9	-104.8	948.3	-77.0	-5.4	-35.5
43RD	569.00	-6.5	93.5	1612	2635	-4.1	35.5	-96.8	856.4	-65.3	-4.1	-34.4
44TH	582.00	-6.9	88.2	1612	2635	-4.3	33.5	-90.3	762.9	-54.8	-2.9	-33.4
45TH	595.00	-27.4	58.9	1612	2635	-17.0	22.4	-83.4	674.7	-45.4	-1.8	-31.9
46TH	608.00	-23.7	102.0	1542	2635	-15.4	38.7	-56.0	615.7	-37.0	-.9	-28.6
47TH	621.00	-16.7	59.4	1402	1465	-11.9	40.6	-32.3	513.7	-29.7	-.3	-27.2
48TH	634.00	-10.6	59.6	1263	1465	-8.4	40.7	-15.6	454.3	-23.4	.0	-23.9

TABLE 7. SHEAR AND MOMENT DIAGRAMS : HOUSTON NATIONAL BANK
WIND DIRECTION 110 CONFIGURATION A REFERENCE PRESSURE 30.0 PSF GUST FACTOR 1.32

FLOOR	HEIGHT FT	X-FORCE KIPS	Y-FORCE KIPS	X-AREA SQ FT	Y-AREA SQ FT	X-PRESS PSF	Y-PRESS PSF	X-SHEAR KIPS	Y-SHEAR KIPS	X-MOMENT	Y-MOMENT	Z-MOMENT
										1000-FT-KIPS		
49TH	647.00	-6.1	59.5	1123	1465	-5.4	40.6	-5.0	394.6	-17.9	.2	-20.8
50TH	660.00	-3.1	58.6	983	1465	-3.1	40.0	1.1	335.1	-13.1	.2	-17.8
51ST	673.00	-.6	57.6	844	1465	-.7	39.3	4.2	276.6	-9.2	.2	-14.8
52ND	686.00	1.3	57.3	704	1465	1.8	39.1	4.8	219.0	-5.9	.1	-11.8
53RD	699.00	.8	57.6	564	1465	1.5	39.4	3.5	161.7	-3.5	.0	-8.8
54TH	712.00	3.3	58.1	424	1465	7.8	39.6	2.7	104.1	-1.7	.0	-5.7
55TH	725.00	-.7	46.0	450	3718	-1.4	12.4	-.7	46.0	-.8	-.0	-2.5

TABLE 7. SHEAR AND MOMENT DIAGRAMS : HOUSTON NATIONAL BANK
WIND DIRECTION 120 CONFIGURATION A REFERENCE PRESSURE 30.0 PSF GUST FACTOR 1.32

FLOOR	HEIGHT FT	X-FORCE KIPS	Y-FORCE KIPS	X-AREA SQ FT	Y-AREA SQ FT	X-PRESS PSF	Y-PRESS PSF	X-SHEAR KIPS	Y-SHEAR KIPS	X-MOMENT 1000-FT-KIPS	Y-MOMENT 1000-FT-KIPS	Z-MOMENT 1000-FT-KIPS
GRND	0.00	-4.7	22.8	3024	3024	-1.6	7.5	-236.9	2880.6	-1267.6	-147.1	-56.4
BASE	12.00	-2.2	11.4	1512	1512	-1.5	7.5	-232.2	2857.8	-1233.2	-144.3	-56.6
MEZZ	18.00	-6.3	34.2	4536	4536	-1.4	7.5	-229.9	2846.4	-1216.1	-142.9	-56.7
2ND	36.00	-4.0	12.9	3276	6552	-1.2	2.0	-223.6	2812.3	-1165.2	-138.9	-56.9
3RD	49.00	-.4	3.5	696	1512	-.6	2.3	-219.6	2799.4	-1128.7	-136.0	-56.7
SILL	52.00	.1	13.1	2320	5040	.0	2.6	-219.2	2795.9	-1120.3	-135.3	-56.8
4TH	62.00	2.1	20.7	3016	6552	.7	3.2	-219.3	2782.8	-1092.4	-133.1	-57.1
5TH	75.00	3.0	23.9	3016	6552	1.0	3.6	-221.4	2762.0	-1056.4	-130.3	-57.9
6TH	88.00	1.4	9.3	1160	2520	1.2	3.7	-224.4	2738.2	-1020.6	-127.4	-59.0
DUMY	93.00	.7	15.1	1483	4032	.5	3.8	-225.7	2728.9	-1006.9	-126.2	-59.4
7TH	101.00	.4	27.0	2183	6552	.2	4.1	-226.5	2713.8	-985.2	-124.4	-59.6
8TH	114.00	-.4	34.4	1903	6552	-.2	5.2	-226.9	2686.8	-950.1	-121.5	-59.8
9TH	127.00	-.6	21.6	909	3528	-.7	6.1	-226.5	2652.4	-915.4	-118.5	-60.3
DUMY	134.00	-.5	16.5	744	1512	-.7	10.9	-225.9	2630.9	-896.9	-116.9	-60.7
10TH	140.00	-.4	35.0	1612	3276	-.2	10.7	-225.4	2614.4	-881.1	-115.6	-60.9
11TH	153.00	.7	34.0	1612	3276	.4	10.4	-225.1	2579.4	-847.4	-112.7	-61.2
12TH	166.00	1.8	33.9	1612	3276	1.1	10.4	-225.8	2545.4	-814.1	-109.7	-61.5
13TH	179.00	2.9	33.9	1612	3276	1.8	10.3	-227.6	2511.4	-781.2	-106.8	-61.8
14TH	192.00	4.0	33.8	1612	3276	2.5	10.3	-230.5	2477.6	-748.8	-103.8	-62.1
15TH	205.00	4.9	33.8	1612	3276	3.0	10.3	-234.4	2443.7	-716.8	-100.8	-62.3
16TH	218.00	5.3	33.7	1612	3276	3.3	10.3	-239.3	2410.0	-685.2	-97.7	-62.4
17TH	231.00	5.7	33.7	1612	3276	3.6	10.3	-244.6	2376.2	-654.1	-94.6	-62.5
18TH	244.00	6.1	33.6	1612	3276	3.8	10.3	-250.3	2342.6	-623.4	-91.3	-62.6
19TH	257.00	6.7	33.6	1612	3276	4.1	10.2	-256.5	2308.9	-593.2	-88.1	-62.5
20TH	270.00	8.5	36.9	1612	3276	5.2	11.3	-263.1	2275.4	-563.4	-84.7	-62.4
21ST	283.00	10.2	40.8	1612	3276	6.3	12.4	-271.6	2238.5	-534.1	-81.2	-62.4
22ND	296.00	5.8	43.4	1612	3276	3.6	13.2	-281.8	2197.7	-505.2	-77.6	-62.7
23RD	309.00	4.8	45.9	1612	3276	3.0	14.0	-287.6	2154.3	-476.9	-73.9	-62.7
24TH	322.00	1.7	48.0	1612	3276	1.1	14.7	-292.5	2108.4	-449.2	-70.1	-62.6
25TH	335.00	-1.4	49.9	1612	3276	-.9	15.2	-294.2	2060.4	-422.1	-66.3	-62.4
26TH	348.00	-2.6	50.4	1612	3276	-1.6	15.4	-292.8	2010.4	-395.7	-62.5	-62.1
27TH	361.00	11.8	51.9	1612	3276	7.3	15.8	-290.2	1960.1	-369.9	-58.7	-61.5
28TH	374.00	14.4	57.1	1612	3276	8.9	17.4	-302.0	1908.2	-344.7	-54.9	-60.9
29TH	387.00	.6	59.4	1612	3276	.4	18.1	-316.4	1851.0	-320.3	-50.8	-60.6
30TH	400.00	-10.7	53.7	1612	3276	-6.6	16.4	-317.0	1791.6	-296.6	-46.7	-60.2
31ST	413.00	-10.7	56.2	1612	3276	-6.6	17.2	-306.3	1737.9	-273.7	-42.7	-58.7
32ND	426.00	-9.7	57.4	1612	2635	-6.0	21.8	-295.6	1681.7	-251.4	-38.8	-57.1
33RD	439.00	-8.7	59.9	1612	2635	-5.4	22.8	-285.9	1624.3	-230.0	-35.0	-55.4
34TH	452.00	-7.8	62.5	1612	2635	-4.9	23.7	-277.2	1564.3	-209.2	-31.3	-53.7
35TH	465.00	-8.0	68.9	1612	2635	-5.0	26.2	-269.4	1501.9	-189.3	-27.8	-52.1
36TH	478.00	-8.2	74.8	1612	2635	-5.1	28.4	-261.4	1433.0	-170.2	-24.3	-50.6
37TH	491.00	-16.4	77.8	1612	2635	-10.2	29.5	-253.2	1358.2	-152.1	-21.0	-49.3
38TH	504.00	-18.7	80.8	1612	2635	-11.6	30.7	-236.8	1280.4	-134.9	-17.8	-47.5
39TH	517.00	-23.1	83.7	1612	2635	-14.3	31.8	-218.1	1199.6	-118.8	-14.8	-45.7
40TH	530.00	-27.4	86.3	1612	2635	-17.0	32.8	-195.1	1116.0	-103.8	-12.1	-43.7
41ST	543.00	-28.3	88.1	1612	2635	-17.5	33.4	-167.7	1029.7	-89.8	-9.8	-41.6
42ND	556.00	-11.7	89.8	1612	2635	-7.3	34.1	-139.4	941.6	-77.0	-7.8	-39.5
43RD	569.00	-12.9	91.8	1612	2635	-8.0	34.9	-127.7	851.8	-65.3	-6.1	-37.9
44TH	582.00	-14.0	87.2	1612	2635	-8.7	33.1	-114.8	759.9	-54.9	-4.5	-36.3
45TH	595.00	-28.7	59.0	1612	2635	-17.8	22.4	-100.7	672.7	-45.6	-3.1	-34.4
46TH	608.00	-24.4	96.7	1542	2635	-15.9	36.7	-72.1	613.7	-37.2	-2.0	-30.7
47TH	621.00	-17.7	59.8	1402	1465	-12.6	40.8	-47.6	517.0	-29.8	-1.2	-28.8
48TH	634.00	-11.8	60.4	1263	1465	-9.3	41.2	-30.0	457.2	-23.5	-.7	-25.3

TABLE 7. SHEAR AND MOMENT DIAGRAMS : HOUSTON NATIONAL BANK
WIND DIRECTION 120 CONFIGURATION A REFERENCE PRESSURE 30.0 PSF GUST FACTOR 1.32

FLOOR	HEIGHT FT	X-FORCE KIPS	Y-FORCE KIPS	X-AREA SQ FT	Y-AREA SQ FT	X-PRESS PSF	Y-PRESS PSF	X-SHEAR KIPS	Y-SHEAR KIPS	X-MOMENT	Y-MOMENT	Z-MOMENT
										1000-FT-KIPS		
49TH	647.00	-7.4	60.4	1123	1465	-6.6	41.3	-18.2	396.9	-18.0	-.4	-21.8
50TH	660.00	-5.1	59.0	983	1465	-5.2	40.3	-10.8	336.4	-13.2	-.2	-18.5
51ST	673.00	-3.5	57.6	844	1465	-4.1	39.3	-5.7	277.4	-9.2	-.1	-15.2
52ND	686.00	-2.3	57.2	704	1465	-3.3	39.1	-2.2	219.8	-6.0	-.0	-12.1
53RD	699.00	-.6	57.9	564	1465	-1.0	39.5	.1	162.6	-3.5	.0	-9.0
54TH	712.00	1.0	58.4	424	1465	2.5	39.8	.7	104.7	-1.7	-.0	-5.8
55TH	725.00	-.4	46.3	450	3718	-.8	12.4	-.4	46.3	-.8	-.0	-2.6

TABLE 7. SHEAR AND MOMENT DIAGRAMS : HOUSTON NATIONAL BANK
WIND DIRECTION 130 CONFIGURATION A REFERENCE PRESSURE 30.0 PSF GUST FACTOR 1.32

FLOOR	HEIGHT FT	X-FORCE KIPS	Y-FORCE KIPS	X-AREA SQ FT	Y-AREA SQ FT	X-PRESS PSF	Y-PRESS PSF	X-SHEAR KIPS	Y-SHEAR KIPS	X-MOMENT 1000-FT-KIPS	Y-MOMENT 1000-FT-KIPS	Z-MOMENT 1000-FT-KIPS
GRND	0.00	-6.5	23.6	3024	3024	-2.1	7.8	-96.1	2931.9	-1261.0	-83.5	-77.9
BASE	12.00	-3.2	11.9	1512	1512	-2.1	7.9	-89.6	2908.3	-1225.9	-82.4	-77.6
MEZZ	18.00	-9.2	36.2	4536	4536	-2.0	8.0	-86.5	2896.4	-1208.5	-81.9	-77.4
2ND	36.00	-4.1	18.3	3276	6552	-1.2	2.8	-77.2	2860.2	-1156.7	-80.4	-76.7
3RD	49.00	-.5	4.6	696	1512	-.7	3.0	-73.2	2841.9	-1119.7	-79.4	-76.3
SILL	52.00	-.4	16.3	2320	5040	-.2	3.2	-72.7	2837.3	-1111.1	-79.2	-76.2
4TH	62.00	.5	24.6	3016	6552	.2	3.8	-72.3	2820.9	-1082.9	-78.5	-76.1
5TH	75.00	.2	27.9	3016	6552	.1	4.3	-72.8	2796.3	-1046.3	-77.5	-76.0
6TH	88.00	-.0	11.6	1160	2520	-.0	4.6	-73.0	2768.4	-1010.2	-76.6	-75.9
DUMY	93.00	-.0	20.0	1483	4032	-.0	5.0	-73.0	2756.8	-996.4	-76.2	-75.7
7TH	101.00	.2	34.1	2183	6552	.1	5.2	-73.0	2736.8	-974.4	-75.6	-75.3
8TH	114.00	.6	34.7	1903	6552	.3	5.3	-73.2	2702.7	-939.0	-74.7	-74.6
9TH	127.00	.6	19.0	909	3528	.7	5.4	-73.8	2668.0	-904.1	-73.7	-74.5
DUMY	134.00	.7	16.3	744	1512	1.0	10.8	-74.4	2649.0	-885.5	-73.2	-74.6
10TH	140.00	2.2	35.0	1612	3276	1.4	10.7	-75.1	2632.8	-869.7	-72.8	-74.5
11TH	153.00	3.2	34.8	1612	3276	2.0	10.6	-77.4	2597.7	-835.7	-71.8	-74.5
12TH	166.00	4.2	35.3	1612	3276	2.6	10.8	-80.6	2563.0	-802.1	-70.7	-74.5
13TH	179.00	5.1	35.8	1612	3276	3.2	10.9	-84.8	2527.7	-769.0	-69.7	-74.4
14TH	192.00	6.1	36.4	1612	3276	3.8	11.1	-89.9	2491.9	-736.4	-68.5	-74.4
15TH	205.00	7.0	36.9	1612	3276	4.3	11.3	-96.0	2455.5	-704.2	-67.3	-74.3
16TH	218.00	7.6	37.5	1612	3276	4.7	11.4	-102.9	2418.6	-672.6	-66.0	-74.3
17TH	231.00	8.2	38.0	1612	3276	5.1	11.6	-110.5	2381.2	-641.4	-64.6	-74.2
18TH	244.00	8.9	38.5	1612	3276	5.5	11.8	-118.8	2343.2	-610.6	-63.2	-74.2
19TH	257.00	9.5	39.1	1612	3276	5.9	11.9	-127.6	2304.6	-580.4	-61.6	-74.1
20TH	270.00	10.5	41.5	1612	3276	6.5	12.7	-137.1	2265.6	-550.7	-59.8	-74.0
21ST	283.00	11.4	44.2	1612	3276	7.0	13.5	-147.6	2224.1	-521.5	-58.0	-73.9
22ND	296.00	8.7	46.1	1612	3276	5.4	14.1	-158.9	2179.9	-492.9	-56.0	-73.9
23RD	309.00	8.2	48.0	1612	3276	5.1	14.6	-167.6	2133.8	-464.9	-53.9	-73.6
24TH	322.00	6.5	49.1	1612	3276	4.0	15.0	-175.8	2085.8	-437.5	-51.6	-73.3
25TH	335.00	4.8	49.9	1612	3276	3.0	15.2	-182.3	2036.7	-410.7	-49.3	-72.7
26TH	348.00	3.9	49.9	1612	3276	2.4	15.2	-187.1	1986.8	-384.5	-46.9	-72.0
27TH	361.00	10.5	50.5	1612	3276	6.5	15.4	-191.0	1936.9	-359.0	-44.4	-70.9
28TH	374.00	11.3	53.3	1612	3276	7.0	16.3	-201.5	1886.4	-334.2	-41.9	-69.7
29TH	387.00	2.3	56.0	1612	3276	1.4	17.1	-212.8	1833.1	-310.0	-39.2	-68.3
30TH	400.00	-2.7	58.1	1612	3276	-1.6	17.7	-215.1	1777.2	-286.5	-36.4	-66.7
31ST	413.00	-3.5	62.2	1612	3276	-2.2	19.0	-212.5	1719.1	-263.8	-33.6	-64.9
32ND	426.00	-4.0	64.7	1612	2635	-2.5	24.5	-209.0	1656.8	-241.8	-30.9	-63.0
33RD	439.00	-4.5	68.1	1612	2635	-2.8	25.8	-205.0	1592.2	-220.7	-28.2	-61.0
34TH	452.00	-5.1	71.5	1612	2635	-3.1	27.1	-200.4	1524.1	-200.5	-25.6	-58.9
35TH	465.00	-5.5	74.0	1612	2635	-3.4	28.1	-195.4	1452.6	-181.1	-23.0	-56.8
36TH	478.00	-6.1	76.1	1612	2635	-3.8	28.9	-189.8	1378.6	-162.7	-20.5	-54.8
37TH	491.00	-10.6	77.9	1612	2635	-6.6	29.6	-183.7	1302.5	-145.3	-18.1	-52.8
38TH	504.00	-12.2	79.7	1612	2635	-7.6	30.2	-173.1	1224.6	-128.9	-15.8	-50.6
39TH	517.00	-14.9	81.5	1612	2635	-9.2	30.9	-160.9	1144.9	-113.5	-13.6	-48.4
40TH	530.00	-17.5	83.2	1612	2635	-10.9	31.6	-146.0	1063.5	-99.1	-11.6	-46.2
41ST	543.00	-18.1	84.7	1612	2635	-11.2	32.1	-128.5	980.3	-85.8	-9.8	-43.9
42ND	556.00	-7.8	86.2	1612	2635	-4.9	32.7	-110.4	895.6	-73.6	-8.2	-41.6
43RD	569.00	-8.1	87.9	1612	2635	-5.0	33.4	-102.6	809.4	-62.5	-6.9	-39.7
44TH	582.00	-8.2	83.4	1612	2635	-5.1	31.7	-94.5	721.6	-52.6	-5.6	-37.9
45TH	595.00	-15.4	57.1	1612	2635	-9.5	21.7	-86.3	638.1	-43.8	-4.4	-35.7
46TH	608.00	-13.9	86.5	1542	2635	-9.0	32.8	-71.0	581.0	-35.8	-3.4	-32.1
47TH	621.00	-11.2	56.8	1402	1465	-8.0	38.8	-57.0	494.5	-28.8	-2.6	-29.8
48TH	634.00	-8.9	56.4	1263	1465	-7.0	38.5	-45.8	437.7	-22.8	-1.9	-26.2

TABLE 7. SHEAR AND MOMENT DIAGRAMS : HOUSTON NATIONAL BANK
WIND DIRECTION 130 CONFIGURATION A REFERENCE PRESSURE 30.0 PSF GUST FACTOR 1.32

FLOOR	HEIGHT FT	X-FORCE KIPS	Y-FORCE KIPS	X-AREA SQ FT	Y-AREA SQ FT	X-PRESS PSF	Y-PRESS PSF	X-SHEAR KIPS	Y-SHEAR KIPS	X-MOMENT	Y-MOMENT	Z-MOMENT
										1000-FT-KIPS		
49TH	647.00	-7.4	56.0	1123	1465	-6.6	38.2	-36.9	381.3	-17.5	-1.3	-22.7
50TH	660.00	-7.3	55.6	983	1465	-7.4	37.9	-29.6	325.3	-12.9	-.9	-19.2
51ST	673.00	-7.4	55.1	844	1465	-8.8	37.6	-22.3	269.8	-9.0	-.6	-15.9
52ND	686.00	-7.6	55.5	704	1465	-10.7	37.9	-14.9	214.7	-5.8	-.3	-12.6
53RD	699.00	-2.6	56.5	564	1465	-4.6	38.6	-7.4	159.2	-3.4	-.2	-9.3
54TH	712.00	-1.3	57.2	424	1465	-2.9	39.0	-4.8	102.6	-1.7	-.1	-6.0
55TH	725.00	-3.5	45.5	450	3718	-7.9	12.2	-3.5	45.5	-.7	-.1	-2.7

TABLE 7. SHEAR AND MOMENT DIAGRAMS : HOUSTON NATIONAL BANK
WIND DIRECTION 140 CONFIGURATION A REFERENCE PRESSURE 30.0 PSF GUST FACTOR 1.32

FLOOR	HEIGHT FT	X-FORCE KIPS	Y-FORCE KIPS	X-AREA SQ FT	Y-AREA SQ FT	X-PRESS PSF	Y-PRESS PSF	X-SHEAR KIPS	Y-SHEAR KIPS	X-MOMENT	Y-MOMENT	Z-MOMENT
										1000-FT-KIPS		
GRND	0.00	2.7	21.9	3024	3024	.9	7.2	166.9	2736.2	-1142.0	16.4	-80.0
BASE	12.00	1.1	11.1	1512	1512	.7	7.3	164.2	2714.3	-1109.3	14.4	-80.1
MEZZ	18.00	2.5	33.9	4536	4536	.5	7.5	163.1	2703.2	-1093.1	13.4	-80.1
2ND	36.00	6.0	17.4	3276	6552	1.8	2.7	160.6	2669.3	-1044.7	10.5	-79.7
3RD	49.00	2.0	4.5	696	1512	2.9	3.0	154.6	2651.9	-1010.1	8.5	-79.8
SILL	52.00	9.1	16.3	2320	5040	3.9	3.2	152.6	2647.4	-1002.2	8.0	-79.8
4TH	62.00	13.4	25.1	3016	6552	4.4	3.8	143.5	2631.1	-975.8	6.5	-80.1
5TH	75.00	12.1	27.3	3016	6552	4.0	4.2	130.1	2606.0	-941.8	4.7	-80.4
6TH	88.00	4.3	11.9	1160	2520	3.7	4.7	117.9	2578.7	-908.1	3.1	-80.4
DUMY	93.00	5.7	21.2	1483	4032	3.9	5.3	113.6	2566.9	-895.2	2.6	-80.3
7TH	101.00	8.5	37.6	2183	6552	3.9	5.7	107.9	2545.7	-874.7	1.7	-79.7
8TH	114.00	8.4	38.7	1903	6552	4.4	5.9	99.3	2508.0	-841.9	.3	-78.6
9TH	127.00	4.9	21.3	909	3528	5.3	6.0	90.9	2469.3	-809.5	-.9	-77.8
DUMY	134.00	4.3	18.2	744	1512	5.7	12.1	86.0	2447.9	-792.3	-1.5	-77.7
10TH	140.00	8.8	38.9	1612	3276	5.4	11.9	81.8	2429.7	-777.7	-2.0	-77.4
11TH	153.00	8.1	38.1	1612	3276	5.0	11.6	73.0	2390.8	-746.4	-3.0	-76.8
12TH	166.00	7.5	38.3	1612	3276	4.6	11.7	64.9	2352.7	-715.5	-3.9	-76.2
13TH	179.00	6.9	38.5	1612	3276	4.2	11.8	57.4	2314.4	-685.2	-4.7	-75.6
14TH	192.00	6.2	38.8	1612	3276	3.9	11.8	50.6	2275.9	-655.4	-5.4	-75.0
15TH	205.00	5.7	39.0	1612	3276	3.5	11.9	44.4	2237.2	-626.0	-6.1	-74.3
16TH	218.00	5.5	39.3	1612	3276	3.4	12.0	38.7	2198.2	-597.2	-6.6	-73.7
17TH	231.00	5.3	39.5	1612	3276	3.3	12.1	33.2	2158.9	-568.9	-7.1	-73.0
18TH	244.00	5.0	39.8	1612	3276	3.1	12.1	28.0	2119.4	-541.1	-7.5	-72.3
19TH	257.00	4.8	40.0	1612	3276	3.0	12.2	22.9	2079.6	-513.8	-7.8	-71.6
20TH	270.00	4.4	41.7	1612	3276	2.7	12.7	18.1	2039.6	-487.0	-8.1	-70.9
21ST	283.00	4.0	43.3	1612	3276	2.5	13.2	13.7	1997.9	-460.8	-8.3	-70.3
22ND	296.00	3.1	43.7	1612	3276	1.9	13.3	9.8	1954.6	-435.1	-8.4	-69.7
23RD	309.00	3.0	44.0	1612	3276	1.8	13.4	6.7	1911.0	-409.9	-8.5	-68.9
24TH	322.00	3.0	44.2	1612	3276	1.9	13.5	3.7	1867.0	-385.4	-8.6	-67.9
25TH	335.00	3.1	44.5	1612	3276	1.9	13.6	.7	1822.7	-361.4	-8.6	-66.8
26TH	348.00	3.2	45.7	1612	3276	2.0	13.9	-2.4	1778.3	-338.0	-8.6	-65.5
27TH	361.00	4.4	47.4	1612	3276	2.7	14.5	-5.6	1732.6	-315.2	-8.6	-64.1
28TH	374.00	5.5	49.7	1612	3276	3.4	15.2	-10.0	1685.2	-293.0	-8.5	-62.8
29TH	387.00	3.8	52.3	1612	3276	2.4	16.0	-15.4	1635.5	-271.4	-8.3	-61.2
30TH	400.00	2.0	55.7	1612	3276	1.3	17.0	-19.2	1583.1	-250.4	-8.1	-59.5
31ST	413.00	1.7	60.3	1612	3276	1.0	18.4	-21.3	1527.4	-230.2	-7.8	-57.8
32ND	426.00	1.4	62.2	1612	2635	.9	23.6	-22.9	1467.1	-210.8	-7.5	-56.2
33RD	439.00	1.2	65.5	1612	2635	.7	24.9	-24.4	1404.9	-192.1	-7.2	-54.4
34TH	452.00	1.0	68.8	1612	2635	.6	26.1	-25.5	1339.3	-174.3	-6.9	-52.5
35TH	465.00	1.5	68.6	1612	2635	.9	26.0	-26.5	1270.5	-157.3	-6.5	-50.6
36TH	478.00	1.9	68.2	1612	2635	1.2	25.9	-28.0	1201.9	-141.2	-6.2	-48.7
37TH	491.00	.3	69.3	1612	2635	.2	26.3	-29.9	1133.7	-126.0	-5.8	-46.8
38TH	504.00	-.2	70.3	1612	2635	-.1	26.7	-30.2	1064.4	-111.8	-5.4	-44.9
39TH	517.00	-1.6	71.8	1612	2635	-1.0	27.3	-30.0	994.1	-98.4	-5.0	-43.0
40TH	530.00	-3.1	73.4	1612	2635	-1.9	27.9	-28.4	922.3	-85.9	-4.7	-41.1
41ST	543.00	-3.2	74.0	1612	2635	-2.0	28.1	-25.3	848.9	-74.4	-4.3	-39.3
42ND	556.00	3.9	74.2	1612	2635	2.4	28.1	-22.2	774.9	-63.9	-4.0	-37.4
43RD	569.00	4.2	74.4	1612	2635	2.6	28.2	-26.0	700.7	-54.3	-3.7	-35.7
44TH	582.00	4.3	70.1	1612	2635	2.7	26.6	-30.3	626.4	-45.6	-3.3	-34.1
45TH	595.00	-.9	49.5	1612	2635	-.5	18.8	-34.6	556.3	-37.9	-2.9	-32.2
46TH	608.00	-1.9	74.4	1542	2635	-1.3	28.2	-33.7	506.8	-31.0	-2.5	-29.1
47TH	621.00	-2.5	50.5	1402	1465	-1.8	34.5	-31.8	432.4	-24.9	-2.0	-27.0
48TH	634.00	-3.3	50.0	1263	1465	-2.6	34.2	-29.3	381.9	-19.6	-1.6	-23.7

TABLE 7. SHEAR AND MOMENT DIAGRAMS : HOUSTON NATIONAL BANK
WIND DIRECTION 140 CONFIGURATION A REFERENCE PRESSURE 30.0 PSF GUST FACTOR 1.32

FLOOR	HEIGHT FT	X-FORCE KIPS	Y-FORCE KIPS	X-AREA SQ FT	Y-AREA SQ FT	X-PRESS PSF	Y-PRESS PSF	X-SHEAR KIPS	Y-SHEAR KIPS	X-MOMENT	Y-MOMENT	Z-MOMENT
										1000-FT-KIPS		
49TH	647.00	-3.8	49.6	1123	1465	-3.4	33.9	-26.0	331.9	-15.0	-1.3	-20.5
50TH	660.00	-4.1	49.3	983	1465	-4.1	33.7	-22.2	282.2	-11.0	-1.0	-17.3
51ST	673.00	-4.6	49.0	844	1465	-5.4	33.5	-18.1	232.9	-7.7	-.7	-14.2
52ND	686.00	-5.1	48.8	704	1465	-7.3	33.3	-13.5	183.9	-4.9	-.5	-11.1
53RD	699.00	-.2	48.7	564	1465	-.4	33.2	-8.4	135.1	-2.9	-.3	-8.1
54TH	712.00	-.2	48.4	424	1465	-.4	33.1	-8.2	86.4	-1.4	-.2	-5.2
55TH	725.00	-8.0	38.0	450	3718	-17.8	10.2	-8.0	38.0	-.6	-.1	-2.3

TABLE 7. SHEAR AND MOMENT DIAGRAMS : HOUSTON NATIONAL BANK
WIND DIRECTION 150 CONFIGURATION A REFERENCE PRESSURE 30.0 PSF GUST FACTOR 1.32

FLOOR	HEIGHT FT	X-FORCE KIPS	Y-FORCE KIPS	X-AREA SQ FT	Y-AREA SQ FT	X-PRESS PSF	Y-PRESS PSF	X-SHEAR KIPS	Y-SHEAR KIPS	X-MOMENT 1000-FT-KIPS	Y-MOMENT 1000-FT-KIPS	Z-MOMENT 1000-FT-KIPS
GRND	0.00	6.6	14.9	3024	3024	2.2	4.9	468.5	2256.6	-950.5	152.9	-69.7
BASE	12.00	3.1	7.6	1512	1512	2.0	5.0	461.9	2241.7	-923.5	147.3	-70.0
MEZZ	18.00	8.5	23.4	4536	4536	1.9	5.2	458.9	2234.1	-910.1	144.5	-70.0
2ND	36.00	8.2	8.4	3276	6552	2.5	1.3	450.3	2210.7	-870.1	136.3	-70.0
3RD	49.00	2.4	2.5	696	1512	3.5	1.7	442.2	2202.3	-841.4	130.5	-70.2
SILL	52.00	10.2	9.8	2320	5040	4.4	2.0	439.7	2199.8	-834.8	129.2	-70.2
4TH	62.00	15.4	17.0	3016	6552	5.1	2.6	429.5	2190.0	-812.9	124.9	-70.5
5TH	75.00	15.3	15.9	3016	6552	5.1	2.4	414.1	2173.0	-784.5	119.4	-70.8
6TH	88.00	5.8	7.7	1160	2520	5.0	3.1	398.8	2157.1	-756.4	114.1	-70.9
DUMY	93.00	7.7	15.7	1483	4032	5.2	3.9	393.0	2149.4	-745.6	112.1	-70.8
7TH	101.00	11.8	31.1	2183	6552	5.4	4.7	385.3	2133.7	-728.5	109.0	-70.3
8TH	114.00	11.7	35.0	1903	6552	6.2	5.3	373.4	2102.6	-700.9	104.1	-69.3
9TH	127.00	6.5	20.5	909	3528	7.2	5.8	361.7	2067.6	-673.8	99.3	-68.6
DUMY	134.00	5.6	16.7	744	1512	7.5	11.1	355.2	2047.1	-659.4	96.8	-68.4
10TH	140.00	11.3	35.4	1612	3276	7.0	10.8	349.6	2030.4	-647.2	94.7	-68.1
11TH	153.00	10.3	34.2	1612	3276	6.4	10.4	338.3	1994.9	-621.0	90.2	-67.4
12TH	166.00	9.2	34.3	1612	3276	5.7	10.5	328.0	1960.7	-595.3	85.9	-66.8
13TH	179.00	8.2	34.4	1612	3276	5.1	10.5	318.8	1926.4	-570.1	81.7	-66.0
15TH	205.00	6.3	34.5	1612	3276	3.9	10.5	303.4	1857.7	-520.9	73.6	-64.5
16TH	218.00	6.0	34.6	1612	3276	3.7	10.6	297.1	1823.1	-496.9	69.7	-63.8
17TH	231.00	5.6	34.7	1612	3276	3.5	10.6	291.1	1788.5	-473.5	65.9	-63.0
18TH	244.00	5.3	34.8	1612	3276	3.3	10.6	285.5	1753.8	-450.4	62.1	-62.1
19TH	257.00	5.0	34.9	1612	3276	3.1	10.7	280.2	1719.0	-427.9	58.4	-61.3
20TH	270.00	5.3	35.6	1612	3276	3.3	10.9	275.2	1684.1	-405.7	54.8	-60.4
21ST	283.00	5.6	36.3	1612	3276	3.5	11.1	269.9	1648.5	-384.1	51.3	-59.6
22ND	296.00	6.1	36.1	1612	3276	3.8	11.0	264.2	1612.2	-362.9	47.8	-58.8
23RD	309.00	6.8	35.9	1612	3276	4.2	11.0	258.1	1576.1	-342.2	44.4	-57.8
24TH	322.00	7.4	35.8	1612	3276	4.6	10.9	251.4	1540.2	-321.9	41.1	-56.8
25TH	335.00	8.0	35.6	1612	3276	4.9	10.9	244.0	1504.4	-302.1	37.9	-55.6
26TH	348.00	8.7	36.7	1612	3276	5.4	11.2	236.1	1468.8	-282.8	34.8	-54.3
27TH	361.00	11.8	38.3	1612	3276	7.3	11.7	227.3	1432.1	-263.9	31.8	-53.1
28TH	374.00	13.4	40.1	1612	3276	8.3	12.2	215.6	1393.7	-245.6	28.9	-51.9
29TH	387.00	11.5	42.3	1612	3276	7.1	12.9	202.2	1353.7	-227.7	26.2	-50.5
30TH	400.00	10.8	45.7	1612	3276	6.7	13.9	190.7	1311.4	-210.4	23.6	-49.1
31ST	413.00	10.4	49.1	1612	3276	6.4	15.0	179.9	1265.7	-193.6	21.2	-47.7
32ND	426.00	10.0	51.0	1612	2635	6.2	19.4	169.6	1216.6	-177.5	18.9	-46.4
33RD	439.00	9.6	53.6	1612	2635	5.9	20.3	159.6	1165.6	-162.0	16.8	-45.0
34TH	452.00	9.3	56.2	1612	2635	5.7	21.3	150.0	1112.0	-147.2	14.8	-43.5
35TH	465.00	9.3	55.5	1612	2635	5.8	21.1	140.7	1055.8	-133.1	12.9	-42.1
36TH	478.00	9.4	54.9	1612	2635	5.8	20.8	131.4	1000.3	-119.8	11.1	-40.6
37TH	491.00	8.6	55.9	1612	2635	5.4	21.2	122.0	945.4	-107.1	9.5	-39.1
38TH	504.00	8.7	56.9	1612	2635	5.4	21.6	113.4	889.5	-95.2	7.9	-37.6
39TH	517.00	8.4	58.4	1612	2635	5.2	22.1	104.8	832.6	-84.0	6.5	-36.1
40TH	530.00	8.2	59.9	1612	2635	5.1	22.7	96.3	774.2	-73.5	5.2	-34.7
41ST	543.00	8.7	60.5	1612	2635	5.4	23.0	88.1	714.3	-63.9	4.0	-33.3
42ND	556.00	13.4	60.7	1612	2635	8.3	23.0	79.4	653.9	-55.0	2.9	-31.9
43RD	569.00	14.8	60.9	1612	2635	9.2	23.1	66.0	593.2	-46.9	2.0	-30.6
44TH	582.00	14.9	57.6	1612	2635	9.2	21.9	51.2	532.3	-39.6	1.2	-29.4
45TH	595.00	12.1	41.9	1612	2635	7.5	15.9	36.3	474.7	-33.0	.6	-28.0
46TH	608.00	9.6	59.0	1542	2635	6.2	22.4	24.2	432.8	-27.1	.3	-25.6
47TH	621.00	7.0	42.7	1402	1465	5.0	29.1	14.6	373.8	-21.9	.0	-23.8
48TH	634.00	4.9	42.2	1263	1465	3.9	28.8	7.6	331.1	-17.3	-.1	-21.1

TABLE 7. SHEAR AND MOMENT DIAGRAMS : HOUSTON NATIONAL BANK
WIND DIRECTION 150 CONFIGURATION A REFERENCE PRESSURE 30.0 PSF GUST FACTOR 1.32

FLOOR	HEIGHT FT	X-FORCE KIPS	Y-FORCE KIPS	X-AREA SQ FT	Y-AREA SQ FT	X-PRESS PSF	Y-PRESS PSF	X-SHEAR KIPS	Y-SHEAR KIPS	X-MOMENT	Y-MOMENT	Z-MOMENT
										1000-FT-KIPS		
49TH	647.00	3.2	41.9	1123	1465	2.9	28.6	2.7	288.9	-13.3	-.2	-18.4
50TH	660.00	1.6	41.9	983	1465	1.6	28.6	-.5	247.0	-9.8	-.2	-15.7
51ST	673.00	-.0	41.9	844	1465	-.0	28.6	-2.2	205.1	-6.8	-.2	-13.0
52ND	686.00	-1.6	42.3	704	1465	-2.2	28.9	-2.1	163.2	-4.4	-.2	-10.3
53RD	699.00	2.8	43.0	564	1465	5.0	29.4	-.6	120.9	-2.6	-.2	-7.6
54TH	712.00	1.4	43.4	424	1465	3.4	29.6	-3.4	77.9	-1.3	-.1	-4.9
55TH	725.00	-4.8	34.5	450	3718	-10.6	9.3	-4.8	34.5	-.6	-.1	-2.2

TABLE 7. SHEAR AND MOMENT DIAGRAMS : HOUSTON NATIONAL BANK
WIND DIRECTION 160 CONFIGURATION A REFERENCE PRESSURE 30.0 PSF GUST FACTOR 1.32

FLOOR	HEIGHT FT	X-FORCE KIPS	Y-FORCE KIPS	X-AREA SQ FT	Y-AREA SQ FT	X-PRESS PSF	Y-PRESS PSF	X-SHEAR KIPS	Y-SHEAR KIPS	X-MOMENT 1000-FT-KIPS	Y-MOMENT 1000-FT-KIPS	Z-MOMENT 1000-FT-KIPS
GRND	0.00	6.5	9.1	3024	3024	2.1	3.0	626.2	1583.5	-664.5	266.0	-53.2
BASE	12.00	2.8	4.7	1512	1512	1.8	3.1	619.8	1574.4	-645.5	258.5	-53.8
MEZZ	18.00	6.6	14.4	4536	4536	1.4	3.2	617.0	1569.8	-636.1	254.8	-54.0
2ND	36.00	3.6	3.4	3276	6552	1.1	.5	610.4	1555.4	-608.0	243.7	-54.2
3RD	49.00	1.5	1.3	696	1512	2.2	.9	606.9	1552.0	-587.8	235.8	-54.3
SILL	52.00	7.2	6.0	2320	5040	3.1	1.2	605.3	1550.6	-583.1	234.0	-54.4
4TH	62.00	12.4	11.2	3016	6552	4.1	1.7	598.1	1544.6	-567.6	228.0	-54.7
5TH	75.00	13.0	5.2	3016	6552	4.3	.8	585.7	1533.4	-547.6	220.3	-55.1
6TH	88.00	5.1	3.7	1160	2520	4.4	1.4	572.8	1528.2	-527.7	212.8	-55.3
DUMY	93.00	6.2	10.1	1483	4032	4.2	2.5	567.6	1524.5	-520.1	209.9	-55.3
7TH	101.00	9.0	23.4	2183	6552	4.1	3.6	561.4	1514.4	-508.0	205.4	-55.0
8TH	114.00	8.5	28.2	1903	6552	4.5	4.3	552.4	1490.9	-488.4	198.1	-54.3
9TH	127.00	4.6	17.1	909	3528	5.0	4.9	543.9	1462.8	-469.2	191.0	-53.9
DUMY	134.00	3.9	13.4	744	1512	5.2	8.9	539.4	1445.7	-459.0	187.2	-53.8
10TH	140.00	7.9	28.1	1612	3276	4.9	8.6	535.5	1432.2	-450.4	184.0	-53.5
11TH	153.00	7.1	26.6	1612	3276	4.4	8.1	527.6	1404.2	-432.0	177.1	-53.0
12TH	166.00	6.4	26.5	1612	3276	4.0	8.1	520.5	1377.6	-413.9	170.3	-52.4
13TH	179.00	5.7	26.5	1612	3276	3.5	8.1	514.0	1351.0	-396.2	163.6	-51.8
14TH	192.00	5.0	26.5	1612	3276	3.1	8.1	508.3	1324.5	-378.8	156.9	-51.1
15TH	205.00	4.4	26.5	1612	3276	2.7	8.1	503.3	1297.9	-361.7	150.3	-50.4
16TH	218.00	4.1	26.6	1612	3276	2.5	8.1	499.0	1271.4	-345.0	143.8	-49.7
17TH	231.00	3.8	26.6	1612	3276	2.4	8.1	494.9	1244.8	-328.7	137.4	-49.0
18TH	244.00	3.6	26.6	1612	3276	2.2	8.1	491.0	1218.3	-312.6	131.0	-48.2
19TH	257.00	3.4	26.6	1612	3276	2.1	8.1	487.5	1191.7	-297.0	124.6	-47.4
20TH	270.00	4.1	26.5	1612	3276	2.6	8.1	484.1	1165.2	-281.7	118.3	-46.6
21ST	283.00	4.9	26.3	1612	3276	3.0	8.0	480.0	1138.6	-266.7	112.0	-45.7
22ND	296.00	6.1	25.8	1612	3276	3.8	7.9	475.1	1112.3	-252.1	105.8	-44.9
23RD	309.00	7.2	25.3	1612	3276	4.5	7.7	469.0	1086.5	-237.8	99.7	-44.0
24TH	322.00	8.2	24.9	1612	3276	5.1	7.6	461.8	1061.2	-223.8	93.6	-42.9
25TH	335.00	9.2	24.5	1612	3276	5.7	7.5	453.6	1036.3	-210.2	87.7	-41.8
26TH	348.00	10.0	25.3	1612	3276	6.2	7.7	444.4	1011.9	-196.9	81.8	-40.7
27TH	361.00	11.3	26.5	1612	3276	7.0	8.1	434.4	986.6	-183.9	76.1	-39.5
28TH	374.00	13.6	27.9	1612	3276	8.4	8.5	423.1	960.1	-171.2	70.5	-38.5
29TH	387.00	14.0	29.6	1612	3276	8.7	9.0	409.5	932.2	-158.9	65.1	-37.3
30TH	400.00	14.6	32.1	1612	3276	9.0	9.8	395.5	902.7	-147.0	59.9	-36.2
31ST	413.00	14.8	34.3	1612	3276	9.2	10.5	380.9	870.6	-135.5	54.9	-35.2
32ND	426.00	14.9	35.8	1612	2635	9.3	13.6	366.2	836.3	-124.4	50.0	-34.2
33RD	439.00	15.1	37.5	1612	2635	9.4	14.2	351.3	800.5	-113.7	45.3	-33.2
34TH	452.00	15.3	39.3	1612	2635	9.5	14.9	336.2	763.0	-103.6	40.9	-32.1
35TH	465.00	16.2	38.4	1612	2635	10.0	14.6	320.8	723.7	-93.9	36.6	-31.1
36TH	478.00	17.0	37.4	1612	2635	10.5	14.2	304.7	685.4	-84.7	32.5	-30.0
37TH	491.00	18.0	37.9	1612	2635	11.2	14.4	287.7	647.9	-76.1	28.7	-29.0
38TH	504.00	18.5	38.3	1612	2635	11.5	14.5	269.7	610.1	-67.9	25.1	-28.0
39TH	517.00	18.4	38.8	1612	2635	11.4	14.7	251.2	571.8	-60.2	21.7	-27.0
40TH	530.00	18.4	39.5	1612	2635	11.4	15.0	232.8	532.9	-53.0	18.5	-26.0
41ST	543.00	18.7	38.8	1612	2635	11.6	14.7	214.4	493.5	-46.4	15.6	-25.1
42ND	556.00	21.6	37.5	1612	2635	13.4	14.2	195.7	454.7	-40.2	13.0	-24.1
43RD	569.00	23.5	36.3	1612	2635	14.6	13.8	174.1	417.2	-34.5	10.6	-23.0
44TH	582.00	22.2	34.4	1612	2635	13.8	13.0	150.5	380.9	-29.3	8.4	-21.9
45TH	595.00	22.2	29.6	1612	2635	13.8	11.2	128.3	346.6	-24.6	6.6	-20.7
46TH	608.00	19.8	37.5	1542	2635	12.8	14.2	106.1	316.9	-20.3	5.1	-19.2
47TH	621.00	16.6	31.6	1402	1465	11.9	21.6	86.4	279.4	-16.4	3.9	-17.8
48TH	634.00	14.3	31.5	1263	1465	11.3	21.5	69.7	247.8	-13.0	2.8	-16.0

TABLE 7. SHEAR AND MOMENT DIAGRAMS ; HOUSTON NATIONAL BANK
WIND DIRECTION 160 CONFIGURATION A REFERENCE PRESSURE 30.0 PSF GUST FACTOR 1.32

FLOOR	HEIGHT FT	X-FORCE KIPS	Y-FORCE KIPS	X-AREA SQ FT	Y-AREA SQ FT	X-PRESS PSF	Y-PRESS PSF	X-SHEAR KIPS	Y-SHEAR KIPS	X-MOMENT	Y-MOMENT	Z-MOMENT
										1000-FT-KIPS		
49TH	647.00	12.4	31.4	1123	1465	11.0	21.4	55.4	216.3	-10.0	2.0	-14.1
50TH	660.00	11.0	31.1	903	1465	11.1	21.3	43.0	184.9	-7.4	1.4	-12.1
51ST	673.00	9.3	30.9	844	1465	11.0	21.1	32.1	153.8	-5.2	.9	-10.1
52ND	686.00	7.4	31.2	704	1465	10.5	21.3	22.8	122.9	-3.4	.5	-8.2
53RD	699.00	7.6	32.1	564	1465	13.5	21.9	15.4	91.7	-2.0	.3	-6.2
54TH	712.00	3.7	33.0	424	1465	8.7	22.5	7.7	59.6	-1.0	.1	-4.0
55TH	725.00	4.1	26.6	450	3718	9.0	7.2	4.1	26.6	-.4	.1	-1.8

TABLE 7. SHEAR AND MOMENT DIAGRAMS : HOUSTON NATIONAL BANK
WIND DIRECTION 170 CONFIGURATION A REFERENCE PRESSURE 30.0 PSF GUST FACTOR 1.32

FLOOR	HEIGHT FT	X-FORCE KIPS	Y-FORCE KIPS	X-AREA SQ FT	Y-AREA SQ FT	X-PRESS PSF	Y-PRESS PSF	X-SHEAR KIPS	Y-SHEAR KIPS	X-MOMENT	Y-MOMENT	Z-MOMENT
										1000-FT-KIPS		
GRND	0.00	12.7	6.4	3024	3024	4.2	2.1	721.5	1471.0	-641.3	333.5	-52.1
BASE	12.00	5.0	3.1	1512	1512	3.3	2.1	708.7	1464.5	-623.7	324.9	-53.2
MEZZ	18.00	9.6	9.1	4536	4536	2.1	2.0	703.7	1461.4	-614.9	320.7	-53.6
2ND	36.00	.1	-1.0	3276	6552	.0	-.2	694.1	1452.3	-588.7	308.1	-54.1
3RD	49.00	1.2	.2	696	1512	1.7	.1	694.0	1453.3	-569.8	299.1	-53.8
SILL	52.00	6.7	1.9	2320	5040	2.9	.4	692.9	1453.1	-565.4	297.0	-53.8
4TH	62.00	13.0	5.2	3016	6552	4.3	.8	686.1	1451.2	-550.9	290.1	-54.2
5TH	75.00	12.9	-5.6	3016	6552	4.3	-.9	673.2	1446.0	-532.1	281.3	-55.0
6TH	88.00	5.0	-.5	1160	2520	4.3	-.2	660.2	1451.7	-513.2	272.6	-55.4
DUMY	93.00	4.7	4.4	1483	4032	3.2	1.1	655.3	1452.2	-506.0	269.3	-55.5
7TH	101.00	5.4	16.6	2183	6552	2.5	2.5	650.6	1447.7	-494.4	264.1	-55.2
8TH	114.00	4.2	25.0	1903	6552	2.2	3.8	645.2	1431.2	-475.7	255.7	-54.4
9TH	127.00	2.2	17.0	909	3528	2.4	4.8	640.9	1406.1	-457.2	247.3	-53.9
DUMY	134.00	1.8	12.2	744	1512	2.5	8.1	638.8	1389.2	-447.4	242.8	-53.9
10TH	140.00	3.8	25.2	1612	3276	2.3	7.7	636.9	1376.9	-439.1	239.0	-53.6
11TH	153.00	3.5	23.4	1612	3276	2.2	7.2	633.2	1351.7	-421.4	230.8	-53.1
12TH	166.00	3.2	23.2	1612	3276	2.0	7.1	629.7	1328.3	-404.0	222.6	-52.5
13TH	179.00	2.9	23.0	1612	3276	1.8	7.0	626.5	1305.1	-386.9	214.4	-51.9
14TH	192.00	2.6	22.8	1612	3276	1.6	7.0	623.6	1282.1	-370.1	206.3	-51.3
15TH	205.00	2.4	22.6	1612	3276	1.5	6.9	620.9	1259.3	-353.5	198.2	-50.7
16TH	218.00	2.3	22.5	1612	3276	1.4	6.9	618.5	1236.6	-337.3	190.1	-50.1
17TH	231.00	2.2	22.3	1612	3276	1.4	6.8	616.2	1214.2	-321.4	182.1	-49.4
18TH	244.00	2.1	22.1	1612	3276	1.3	6.7	614.0	1191.9	-305.7	174.1	-48.7
19TH	257.00	2.1	21.9	1612	3276	1.3	6.7	611.9	1169.8	-290.4	166.1	-48.0
20TH	270.00	3.0	22.6	1612	3276	1.9	6.9	609.8	1147.9	-275.3	158.2	-47.2
21ST	283.00	4.0	23.4	1612	3276	2.5	7.1	606.8	1125.3	-260.5	150.3	-46.5
22ND	296.00	5.3	24.0	1612	3276	3.3	7.3	602.8	1101.9	-246.1	142.4	-45.7
23RD	309.00	6.6	24.6	1612	3276	4.1	7.5	597.5	1077.9	-231.9	134.6	-44.8
24TH	322.00	7.8	25.1	1612	3276	4.8	7.6	590.9	1053.4	-218.0	126.9	-43.9
25TH	335.00	9.0	25.5	1612	3276	5.6	7.8	583.1	1028.3	-204.5	119.3	-42.8
26TH	348.00	10.0	26.9	1612	3276	6.2	8.2	574.1	1002.8	-191.3	111.7	-41.7
27TH	361.00	11.0	28.5	1612	3276	6.8	8.7	564.1	975.9	-178.5	104.3	-40.5
28TH	374.00	13.6	30.3	1612	3276	8.4	9.2	553.1	947.4	-166.0	97.1	-39.4
29TH	387.00	14.5	32.2	1612	3276	9.0	9.8	539.5	917.1	-153.8	90.0	-38.2
30TH	400.00	15.8	34.5	1612	3276	9.8	10.5	525.0	884.9	-142.1	83.1	-37.1
31ST	413.00	16.6	36.7	1612	3276	10.3	11.2	509.2	850.4	-130.8	76.3	-36.0
32ND	426.00	17.4	38.2	1612	2635	10.8	14.5	492.6	813.7	-120.0	69.8	-34.9
33RD	439.00	18.2	40.1	1612	2635	11.3	15.2	475.2	775.5	-109.7	63.5	-33.9
34TH	452.00	19.0	41.9	1612	2635	11.8	15.9	457.1	735.4	-99.9	57.5	-32.8
35TH	465.00	20.1	40.1	1612	2635	12.4	15.2	438.1	693.6	-90.6	51.6	-31.7
36TH	478.00	21.2	37.9	1612	2635	13.1	14.4	418.0	653.5	-81.8	46.1	-30.6
37TH	491.00	23.0	36.7	1612	2635	14.3	13.9	396.9	615.6	-73.6	40.8	-29.5
38TH	504.00	24.0	35.6	1612	2635	14.9	13.5	373.8	578.9	-65.8	35.8	-28.4
39TH	517.00	24.8	34.6	1612	2635	15.4	13.1	349.8	543.3	-58.5	31.1	-27.3
40TH	530.00	25.5	33.7	1612	2635	15.8	12.8	325.0	508.7	-51.7	26.7	-26.2
41ST	543.00	26.3	33.2	1612	2635	16.3	12.6	299.6	475.0	-45.3	22.6	-25.1
42ND	556.00	28.5	32.8	1612	2635	17.7	12.4	273.3	441.8	-39.3	18.9	-24.0
43RD	569.00	30.7	32.8	1612	2635	19.1	12.4	244.8	409.0	-33.8	15.5	-22.7
44TH	582.00	29.6	32.2	1612	2635	18.4	12.2	214.1	376.2	-28.7	12.6	-21.5
45TH	595.00	30.4	29.8	1612	2635	18.8	11.3	184.5	344.0	-24.0	10.0	-20.2
46TH	608.00	27.7	37.2	1542	2635	18.0	14.1	154.1	314.2	-19.7	7.8	-18.8
47TH	621.00	23.8	32.6	1402	1465	17.0	22.3	126.4	277.1	-15.9	5.9	-17.5
48TH	634.00	20.6	32.4	1263	1465	16.3	22.1	102.6	244.4	-12.5	4.5	-15.7

TABLE 7. SHEAR AND MOMENT DIAGRAMS : HOUSTON NATIONAL BANK
WIND DIRECTION 170 CONFIGURATION A REFERENCE PRESSURE 30.0 PSF GUST FACTOR 1.32

FLOOR	HEIGHT FT	X-FORCE KIPS	Y-FORCE KIPS	X-AREA SQ FT	Y-AREA SQ FT	X-PRESS PSF	Y-PRESS PSF	X-SHEAR KIPS	Y-SHEAR KIPS	X-MOMENT	Y-MOMENT	Z-MOMENT
										1000-FT-KIPS		
49TH	647.00	17.8	32.1	1123	1465	15.9	21.9	82.0	212.1	-9.5	3.3	-13.8
50TH	660.00	15.4	31.8	983	1465	15.7	21.7	64.2	179.9	-7.0	2.3	-11.9
51ST	673.00	12.9	31.4	844	1465	15.3	21.4	48.8	148.2	-4.9	1.6	-9.9
52ND	686.00	10.4	31.2	704	1465	14.7	21.3	35.9	116.7	-3.1	1.0	-7.9
53RD	699.00	9.8	31.0	564	1465	17.3	21.2	25.5	85.6	-1.8	.6	-5.9
54TH	712.00	4.9	30.6	424	1465	11.6	20.9	15.7	54.5	-.9	.4	-3.7
55TH	725.00	10.8	23.9	450	3718	24.0	6.4	10.8	23.9	-.4	.2	-1.6

TABLE 7. SHEAR AND MOMENT DIAGRAMS : HOUSTON NATIONAL BANK
WIND DIRECTION 180 CONFIGURATION A REFERENCE PRESSURE 30.0 PSF GUST FACTOR 1.32

FLOOR	HEIGHT FT	X-FORCE KIPS	Y-FORCE KIPS	X-AREA SQ FT	Y-AREA SQ FT	X-PRESS PSF	Y-PRESS PSF	X-SHEAR KIPS	Y-SHEAR KIPS	X-MOMENT	Y-MOMENT	Z-MOMENT
										1000-FT-KIPS		
GRND	0.00	17.1	8.6	3024	3024	5.7	2.8	717.1	1305.0	-564.2	341.0	-43.6
BASE	12.00	6.3	3.8	1512	1512	4.2	2.5	700.0	1296.4	-548.6	332.5	-44.9
MEZZ	18.00	9.8	9.8	4536	4536	2.2	2.2	693.7	1292.6	-540.8	328.3	-45.3
2ND	36.00	.3	6.5	3276	6552	.1	1.0	683.9	1282.8	-517.7	315.9	-45.5
3RD	49.00	1.2	1.6	696	1512	1.7	1.1	683.6	1276.3	-501.0	307.0	-45.0
SILL	52.00	6.9	5.5	2320	5040	3.0	1.1	682.4	1274.7	-497.2	304.9	-45.0
4TH	62.00	13.2	7.9	3016	6552	4.4	1.2	675.5	1269.2	-484.5	298.1	-45.5
5TH	75.00	11.3	-8.2	3016	6552	3.7	-1.2	662.3	1261.2	-468.0	289.4	-46.3
6TH	88.00	3.8	-1.8	1160	2520	3.3	-.7	651.1	1269.4	-451.6	280.9	-46.7
DUMY	93.00	3.4	2.7	1483	4032	2.3	.7	647.2	1271.2	-445.2	277.7	-46.7
7TH	101.00	3.5	14.0	2183	6552	1.6	2.1	643.8	1268.4	-435.1	272.5	-46.3
8TH	114.00	2.5	22.8	1903	6552	1.3	3.5	640.3	1254.4	-418.7	264.2	-45.6
9TH	127.00	1.2	15.9	909	3528	1.4	4.5	637.8	1231.6	-402.5	255.8	-45.3
DUMY	134.00	1.1	11.0	744	1512	1.4	7.2	636.6	1215.7	-394.0	251.4	-45.4
10TH	140.00	2.4	22.1	1612	3276	1.5	6.8	635.5	1204.7	-386.7	247.6	-45.3
11TH	153.00	2.5	19.9	1612	3276	1.6	6.1	633.1	1182.6	-371.2	239.3	-45.0
12TH	166.00	2.7	19.7	1612	3276	1.7	6.0	630.6	1162.6	-355.9	231.1	-44.7
13TH	179.00	2.8	19.5	1612	3276	1.7	6.0	627.9	1142.9	-340.9	222.9	-44.3
14TH	192.00	2.9	19.3	1612	3276	1.8	5.9	625.1	1123.4	-326.2	214.8	-44.0
15TH	205.00	3.0	19.2	1612	3276	1.9	5.9	622.2	1104.1	-311.7	206.7	-43.6
16TH	218.00	3.0	19.0	1612	3276	1.8	5.8	619.2	1084.9	-297.5	198.6	-43.1
17TH	231.00	2.9	18.8	1612	3276	1.8	5.8	616.3	1065.9	-283.5	190.6	-42.7
18TH	244.00	2.9	18.7	1612	3276	1.8	5.7	613.3	1047.1	-269.8	182.6	-42.1
19TH	257.00	2.9	18.5	1612	3276	1.8	5.6	610.4	1028.4	-256.3	174.6	-41.6
20TH	270.00	3.0	19.0	1612	3276	1.9	5.8	607.6	1009.9	-243.1	166.7	-41.0
21ST	283.00	3.1	19.7	1612	3276	1.9	6.0	604.6	990.9	-230.1	158.8	-40.3
22ND	296.00	3.4	20.4	1612	3276	2.1	6.2	601.5	971.3	-217.3	151.0	-39.6
23RD	309.00	4.4	21.2	1612	3276	2.7	6.5	598.1	950.8	-204.8	143.2	-38.8
24TH	322.00	5.6	22.1	1612	3276	3.5	6.7	593.7	929.6	-192.6	135.5	-37.9
25TH	335.00	6.8	23.0	1612	3276	4.2	7.0	588.1	907.6	-180.6	127.8	-37.0
26TH	348.00	7.9	23.9	1612	3276	4.9	7.3	581.3	884.6	-169.0	120.2	-35.9
27TH	361.00	9.5	25.2	1612	3276	5.9	7.7	573.3	860.7	-157.6	112.7	-34.8
28TH	374.00	11.8	27.2	1612	3276	7.3	8.3	563.8	835.5	-146.6	105.3	-33.7
29TH	387.00	11.4	29.1	1612	3276	7.1	8.9	552.0	808.3	-135.9	98.0	-32.7
30TH	400.00	13.0	30.5	1612	3276	8.0	9.3	540.6	779.2	-125.6	90.9	-31.7
31ST	413.00	14.0	32.5	1612	3276	8.7	9.9	527.7	748.7	-115.7	84.0	-30.7
32ND	426.00	15.0	33.3	1612	2635	9.3	12.6	513.6	716.2	-106.2	77.2	-29.8
33RD	439.00	15.9	34.7	1612	2635	9.9	13.2	498.7	682.9	-97.1	70.6	-28.9
34TH	452.00	17.0	36.1	1612	2635	10.5	13.7	482.7	648.2	-88.4	64.2	-28.0
35TH	465.00	18.6	34.8	1612	2635	11.5	13.2	465.7	612.2	-80.2	58.1	-27.0
36TH	478.00	20.1	33.3	1612	2635	12.5	12.7	447.2	577.3	-72.5	52.1	-26.1
37TH	491.00	22.7	32.6	1612	2635	14.1	12.4	427.0	544.0	-65.2	46.5	-25.2
38TH	504.00	24.0	31.8	1612	2635	14.9	12.1	404.3	511.4	-58.3	41.1	-24.3
39TH	517.00	24.9	31.1	1612	2635	15.4	11.8	380.3	479.6	-51.9	36.0	-23.4
40TH	530.00	25.8	30.3	1612	2635	16.0	11.5	355.4	448.5	-45.9	31.2	-22.4
41ST	543.00	26.5	29.3	1612	2635	16.4	11.1	329.7	418.2	-40.2	26.7	-21.5
42ND	556.00	27.9	28.4	1612	2635	17.3	10.8	303.2	388.9	-35.0	22.6	-20.5
43RD	569.00	30.7	28.0	1612	2635	19.1	10.6	275.3	360.5	-30.1	18.9	-19.5
44TH	582.00	30.0	27.3	1612	2635	18.6	10.3	244.6	332.5	-25.6	15.5	-18.4
45TH	595.00	30.8	25.2	1612	2635	19.1	9.6	214.6	305.3	-21.5	12.5	-17.4
46TH	608.00	29.0	34.2	1542	2635	18.8	13.0	183.8	280.0	-17.7	9.9	-16.2
47TH	621.00	25.8	28.9	1402	1465	18.4	19.7	154.8	245.8	-14.2	7.7	-15.3
48TH	634.00	23.4	28.4	1263	1465	18.5	19.4	128.9	217.0	-11.2	5.9	-13.7

TABLE 7. SHEAR AND MOMENT DIAGRAMS : HOUSTON NATIONAL BANK
WIND DIRECTION 180 CONFIGURATION A REFERENCE PRESSURE 30.0 PSF GUST FACTOR 1.32

FLOOR	HEIGHT FT	X-FORCE KIPS	Y-FORCE KIPS	X-AREA SQ FT	Y-AREA SQ FT	X-PRESS PSF	Y-PRESS PSF	X-SHEAR KIPS	Y-SHEAR KIPS	X-MOMENT	Y-MOMENT	Z-MOMENT
										1000-FT-KIPS		
49TH	647.00	21.1	28.0	1123	1465	18.8	19.1	105.5	188.5	-8.6	4.3	-12.1
50TH	660.00	19.1	27.6	983	1465	19.5	18.9	84.4	160.5	-6.3	3.1	-10.5
51ST	673.00	16.8	27.2	844	1465	19.9	18.6	65.3	132.9	-4.4	2.1	-8.8
52ND	686.00	14.2	27.3	704	1465	20.2	18.6	48.5	105.7	-2.9	1.4	-7.1
53RD	699.00	12.6	27.8	564	1465	22.4	19.0	34.2	78.4	-1.7	.8	-5.3
54TH	712.00	6.8	28.1	424	1465	15.9	19.2	21.6	50.5	-.8	.5	-3.4
55TH	725.00	14.9	22.4	450	3718	33.0	6.0	14.9	22.4	-.4	.2	-1.5

TABLE 7. SHEAR AND MOMENT DIAGRAMS : HOUSTON NATIONAL BANK
WIND DIRECTION 190 CONFIGURATION A REFERENCE PRESSURE 30.0 PSF GUST FACTOR 1.32

FLOOR	HEIGHT FT	X-FORCE KIPS	Y-FORCE KIPS	X-AREA SQ FT	Y-AREA SQ FT	X-PRESS PSF	Y-PRESS PSF	X-SHEAR KIPS	Y-SHEAR KIPS	X-MOMENT	Y-MOMENT	Z-MOMENT
										1000-FT-KIPS		
GRND	0.00	10.1	12.8	3024	3024	3.3	4.2	505.7	920.5	-392.2	289.7	-32.9
BASE	12.00	2.9	5.6	1512	1512	1.9	3.7	495.6	907.7	-381.2	283.7	-33.3
MEZZ	18.00	-.0	13.4	4536	4536	-.0	2.9	492.7	902.1	-375.8	280.8	-33.4
2ND	36.00	-8.2	3.3	3276	6552	-2.5	.5	492.8	888.7	-359.7	271.9	-32.7
3RD	49.00	-.6	.9	696	1512	-.8	.6	501.0	885.4	-348.2	265.4	-31.6
SILL	52.00	.9	3.4	2320	5040	.4	.7	501.5	884.5	-345.5	263.9	-31.5
4TH	62.00	4.9	5.0	3016	6552	1.6	.8	500.6	881.2	-336.7	258.9	-31.7
5TH	75.00	1.7	-13.1	3016	6552	.6	-2.0	495.7	876.2	-325.3	252.5	-32.0
6TH	88.00	-.2	-4.2	1160	2520	-.1	-1.7	494.0	889.3	-313.8	246.0	-31.4
DUMY	93.00	-1.4	-1.3	1483	4032	-.9	-.3	494.1	893.5	-309.3	243.6	-31.1
7TH	101.00	-3.3	7.7	2183	6552	-1.5	1.2	495.5	894.8	-302.2	239.6	-30.6
8TH	114.00	-3.7	18.1	1903	6552	-1.9	2.8	498.8	887.1	-290.6	233.1	-29.8
9TH	127.00	-2.0	14.0	909	3528	-2.2	4.0	502.6	869.0	-279.2	226.6	-29.5
DUMY	134.00	-1.7	8.9	744	1512	-2.3	5.9	504.6	855.0	-273.1	223.1	-29.5
10TH	140.00	-3.4	18.0	1612	3276	-2.1	5.5	506.2	846.1	-268.0	220.1	-29.4
11TH	153.00	-3.1	16.3	1612	3276	-1.9	5.0	509.6	828.0	-257.2	213.5	-29.2
12TH	166.00	-2.8	15.9	1612	3276	-1.7	4.8	512.8	811.8	-246.5	206.8	-28.9
13TH	179.00	-2.5	15.5	1612	3276	-1.6	4.7	515.6	795.9	-236.0	200.1	-28.7
14TH	192.00	-2.2	15.2	1612	3276	-1.4	4.6	518.1	780.4	-225.8	193.4	-28.4
15TH	205.00	-1.9	14.8	1612	3276	-1.2	4.5	520.3	765.2	-215.8	186.7	-28.0
16TH	218.00	-1.7	14.5	1612	3276	-1.0	4.4	522.2	750.3	-205.9	179.9	-27.7
17TH	231.00	-1.4	14.1	1612	3276	-.9	4.3	523.9	735.8	-196.2	173.1	-27.3
18TH	244.00	-1.2	13.8	1612	3276	-.7	4.2	525.3	721.7	-186.8	166.3	-26.8
19TH	257.00	-1.0	13.5	1612	3276	-.6	4.1	526.5	707.9	-177.5	159.4	-26.4
20TH	270.00	-.7	13.7	1612	3276	-.5	4.2	527.4	694.4	-168.4	152.6	-25.9
21ST	283.00	-.5	14.1	1612	3276	-.3	4.3	528.2	680.7	-159.4	145.7	-25.3
22ND	296.00	.0	14.4	1612	3276	.0	4.4	528.7	666.7	-150.7	138.8	-24.7
23RD	309.00	1.0	14.7	1612	3276	.6	4.5	528.7	652.3	-142.1	132.0	-24.1
24TH	322.00	2.2	15.0	1612	3276	1.4	4.6	527.7	637.6	-133.7	125.1	-23.5
25TH	335.00	3.4	15.3	1612	3276	2.1	4.7	525.5	622.6	-125.5	118.3	-22.8
26TH	348.00	4.5	15.8	1612	3276	2.8	4.8	522.1	607.3	-117.5	111.5	-22.1
27TH	361.00	6.9	16.6	1612	3276	4.3	5.1	517.6	591.5	-109.7	104.7	-21.4
28TH	374.00	9.7	17.9	1612	3276	6.0	5.5	510.7	574.9	-102.2	98.0	-20.6
29TH	387.00	7.8	19.4	1612	3276	4.9	5.9	501.0	557.0	-94.8	91.4	-20.0
30TH	400.00	9.6	21.1	1612	3276	5.9	6.4	493.2	537.6	-87.7	85.0	-19.4
31ST	413.00	10.9	22.4	1612	3276	6.7	6.8	483.6	516.5	-80.8	78.6	-18.8
32ND	426.00	12.1	23.3	1612	2635	7.5	8.8	472.7	494.1	-74.3	72.4	-18.4
33RD	439.00	13.3	24.3	1612	2635	8.3	9.2	460.7	470.8	-68.0	66.3	-17.9
34TH	452.00	14.6	25.4	1612	2635	9.0	9.6	447.4	446.4	-62.0	60.4	-17.4
35TH	465.00	16.0	24.4	1612	2635	9.9	9.3	432.8	421.1	-56.4	54.7	-17.0
36TH	478.00	17.5	23.1	1612	2635	10.8	8.8	416.8	396.7	-51.1	49.2	-16.6
37TH	491.00	20.0	22.2	1612	2635	12.4	8.4	399.3	373.6	-46.1	43.9	-16.1
38TH	504.00	21.4	21.3	1612	2635	13.3	8.1	379.3	351.3	-41.4	38.8	-15.7
39TH	517.00	22.4	20.3	1612	2635	13.9	7.7	357.9	330.0	-36.9	34.0	-15.3
40TH	530.00	23.4	19.4	1612	2635	14.5	7.4	335.5	309.7	-32.8	29.5	-14.9
41ST	543.00	24.3	18.6	1612	2635	15.1	7.0	312.1	290.3	-28.9	25.3	-14.4
42ND	556.00	26.5	18.0	1612	2635	16.4	6.8	287.8	271.7	-25.2	21.4	-13.9
43RD	569.00	30.0	18.1	1612	2635	18.6	6.9	261.3	253.8	-21.8	17.9	-13.3
44TH	582.00	28.3	17.9	1612	2635	17.5	6.8	231.3	235.7	-18.6	14.7	-12.7
45TH	595.00	29.3	17.0	1612	2635	18.2	6.4	203.0	217.7	-15.7	11.8	-12.2
46TH	608.00	27.7	21.7	1542	2635	18.0	8.2	173.7	200.8	-12.9	9.4	-11.5
47TH	621.00	24.8	20.7	1402	1465	17.7	14.1	146.0	179.1	-10.5	7.3	-10.9
48TH	634.00	22.3	20.5	1263	1465	17.7	14.0	121.3	158.4	-8.3	5.6	-10.0

TABLE 7. SHEAR AND MOMENT DIAGRAMS : HOUSTON NATIONAL BANK
WIND DIRECTION 190 CONFIGURATION A REFERENCE PRESSURE 30.0 PSF GUST FACTOR 1.32

FLOOR	HEIGHT FT	X-FORCE KIPS	Y-FORCE KIPS	X-AREA SQ FT	Y-AREA SQ FT	X-PRESS PSF	Y-PRESS PSF	X-SHEAR KIPS	Y-SHEAR KIPS	X-MOMENT	Y-MOMENT	Z-MOMENT
										1000-FT-KIPS		
49TH	647.00	20.0	20.3	1123	1465	17.8	13.8	98.9	137.9	-6.4	4.1	-8.9
50TH	660.00	17.7	20.0	983	1465	18.0	13.6	78.9	117.7	-4.7	3.0	-7.8
51ST	673.00	15.2	19.7	844	1465	18.0	13.4	61.2	97.7	-3.3	2.1	-6.6
52ND	686.00	12.5	19.7	704	1465	17.8	13.5	45.9	78.0	-2.2	1.4	-5.3
53RD	699.00	11.5	20.1	564	1465	20.4	13.7	33.4	58.3	-1.3	.9	-4.1
54TH	712.00	6.4	21.0	424	1465	15.0	14.3	21.9	38.2	-.6	.5	-2.7
55TH	725.00	15.5	17.2	450	3718	34.4	4.6	15.5	17.2	-.3	.3	-1.2

TABLE 7. SHEAR AND MOMENT DIAGRAMS : HOUSTON NATIONAL BANK
WIND DIRECTION 200 CONFIGURATION A REFERENCE PRESSURE 30.0 PSF GUST FACTOR 1.32

FLOOR	HEIGHT FT	X-FORCE KIPS	Y-FORCE KIPS	X-AREA SQ FT	Y-AREA SQ FT	X-PRESS PSF	Y-PRESS PSF	X-SHEAR KIPS	Y-SHEAR KIPS	X-MOMENT	Y-MOMENT	Z-MOMENT
										1000-FT-KIPS		
GRND	0.00	-.8	13.3	3024	3024	-.3	4.4	292.6	641.4	-258.1	214.6	-21.3
BASE	12.00	-1.1	6.0	1512	1512	-.8	4.0	293.4	628.1	-250.5	211.1	-20.8
MEZZ	18.00	-6.3	15.3	4536	4536	-1.4	3.4	294.5	622.2	-246.7	209.3	-20.5
2ND	36.00	-4.4	8.2	3276	6552	-1.3	1.2	300.8	606.8	-235.7	204.0	-19.6
3RD	49.00	-.9	1.6	696	1512	-1.4	1.0	305.1	598.7	-227.8	200.0	-19.4
SILL	52.00	-3.0	4.4	2320	5040	-1.3	.9	306.1	597.1	-226.0	199.1	-19.4
4TH	62.00	-4.1	4.6	3016	6552	-1.4	.7	309.1	592.7	-220.1	196.0	-19.4
5TH	75.00	-5.3	-1.5	3016	6552	-1.8	-.2	313.2	588.0	-212.4	192.0	-19.2
6TH	88.00	-2.4	-.1	1160	2520	-2.0	-.0	318.5	589.6	-204.8	187.9	-18.8
DUMY	93.00	-3.8	1.9	1483	4032	-2.6	.5	320.9	589.6	-201.8	186.3	-18.6
7TH	101.00	-6.6	6.9	2183	6552	-3.0	1.0	324.7	587.7	-197.1	183.7	-18.3
8TH	114.00	-6.5	11.1	1903	6552	-3.4	1.7	331.2	580.8	-189.5	179.4	-17.7
9TH	127.00	-3.4	7.7	909	3528	-3.8	2.2	337.7	569.8	-182.0	175.1	-17.5
DUMY	134.00	-2.9	5.4	744	1512	-3.9	3.6	341.2	562.1	-178.1	172.7	-17.5
10TH	140.00	-6.1	11.1	1612	3276	-3.8	3.4	344.1	556.7	-174.7	170.7	-17.4
11TH	153.00	-5.9	10.4	1612	3276	-3.7	3.2	350.2	545.5	-167.5	166.1	-17.2
12TH	166.00	-5.7	10.4	1612	3276	-3.5	3.2	356.1	535.2	-160.5	161.6	-17.0
13TH	179.00	-5.5	10.6	1612	3276	-3.4	3.2	361.8	524.7	-153.6	156.9	-16.8
14TH	192.00	-5.3	10.7	1612	3276	-3.3	3.3	367.3	514.2	-146.9	152.1	-16.5
15TH	205.00	-5.1	10.8	1612	3276	-3.1	3.3	372.6	503.5	-140.3	147.3	-16.3
16TH	218.00	-4.9	10.9	1612	3276	-3.0	3.3	377.7	492.7	-133.8	142.5	-16.0
17TH	231.00	-4.7	11.0	1612	3276	-2.9	3.4	382.6	481.8	-127.5	137.5	-15.8
18TH	244.00	-4.5	11.1	1612	3276	-2.8	3.4	387.3	470.8	-121.3	132.5	-15.5
19TH	257.00	-4.3	11.3	1612	3276	-2.7	3.4	391.8	459.7	-115.2	127.5	-15.2
20TH	270.00	-4.0	11.1	1612	3276	-2.5	3.4	396.1	448.4	-109.3	122.3	-14.9
21ST	283.00	-3.6	10.9	1612	3276	-2.2	3.3	400.0	437.3	-103.6	117.2	-14.6
22ND	296.00	-2.8	10.7	1612	3276	-1.8	3.3	403.6	426.4	-97.9	111.9	-14.2
23RD	309.00	-1.8	10.5	1612	3276	-1.1	3.2	406.5	415.7	-92.5	106.7	-13.8
24TH	322.00	-.5	10.3	1612	3276	-.3	3.1	408.3	405.2	-87.1	101.4	-13.4
25TH	335.00	.7	10.1	1612	3276	.5	3.1	408.8	394.8	-81.9	96.1	-12.9
26TH	348.00	1.7	10.0	1612	3276	1.0	3.0	408.1	384.8	-76.9	90.7	-12.4
27TH	361.00	3.0	10.2	1612	3276	1.9	3.1	406.4	374.8	-71.9	85.5	-11.9
28TH	374.00	5.5	11.3	1612	3276	3.4	3.4	403.4	364.5	-67.1	80.2	-11.4
29TH	387.00	3.7	12.3	1612	3276	2.3	3.8	397.8	353.3	-62.5	75.0	-10.9
30TH	400.00	6.2	13.3	1612	3276	3.8	4.1	394.2	341.0	-57.9	69.8	-10.6
31ST	413.00	7.4	14.1	1612	3276	4.6	4.3	388.0	327.7	-53.6	64.8	-10.3
32ND	426.00	8.4	14.6	1612	2635	5.2	5.5	380.6	313.6	-49.4	59.8	-10.1
33RD	439.00	9.3	15.2	1612	2635	5.8	5.8	372.2	298.9	-45.4	54.9	-9.9
34TH	452.00	10.4	15.8	1612	2635	6.4	6.0	362.9	283.7	-41.7	50.1	-9.7
35TH	465.00	11.6	15.0	1612	2635	7.2	5.7	352.5	267.9	-38.1	45.4	-9.6
36TH	478.00	12.9	13.9	1612	2635	8.0	5.3	340.9	252.9	-34.7	40.9	-9.4
37TH	491.00	15.7	12.9	1612	2635	9.8	4.9	328.0	239.0	-31.5	36.6	-9.3
38TH	504.00	17.0	11.9	1612	2635	10.5	4.5	312.3	226.1	-28.5	32.4	-9.2
39TH	517.00	18.1	11.2	1612	2635	11.2	4.2	295.3	214.1	-25.6	28.5	-9.0
40TH	530.00	19.2	10.5	1612	2635	11.9	4.0	277.2	202.9	-22.9	24.7	-8.9
41ST	543.00	19.8	10.0	1612	2635	12.3	3.8	258.0	192.4	-20.3	21.3	-8.7
42ND	556.00	19.8	9.7	1612	2635	12.3	3.7	238.2	182.4	-17.9	18.0	-8.5
43RD	569.00	23.5	10.0	1612	2635	14.6	3.8	218.4	172.7	-15.6	15.1	-8.2
44TH	582.00	23.5	10.1	1612	2635	14.6	3.8	194.8	162.7	-13.4	12.4	-8.0
45TH	595.00	24.9	9.9	1612	2635	15.5	3.8	171.3	152.6	-11.4	10.0	-7.9
46TH	608.00	23.3	12.8	1542	2635	15.1	4.9	146.4	142.7	-9.4	7.9	-7.7
47TH	621.00	20.6	14.5	1402	1465	14.7	9.9	123.1	129.9	-7.7	6.2	-7.5
48TH	634.00	18.5	14.4	1263	1465	14.7	9.9	102.6	115.4	-6.1	4.7	-7.0

TABLE 7. SHEAR AND MOMENT DIAGRAMS : HOUSTON NATIONAL BANK
WIND DIRECTION 200 CONFIGURATION A REFERENCE PRESSURE 30.0 PSF GUST FACTOR 1.32

FLOOR	HEIGHT FT	X-FORCE KIPS	Y-FORCE KIPS	X-AREA SQ FT	Y-AREA SQ FT	X-PRESS PSF	Y-PRESS PSF	X-SHEAR KIPS	Y-SHEAR KIPS	X-MOMENT	Y-MOMENT	Z-MOMENT
										1000-FT-KIPS		
49TH	647.00	16.7	14.4	1123	1465	14.8	9.8	84.1	101.0	-4.7	3.5	-6.3
50TH	660.00	15.0	14.5	983	1465	15.2	9.9	67.4	86.6	-3.4	2.5	-5.6
51ST	673.00	13.0	14.6	844	1465	15.4	10.0	52.4	72.0	-2.4	1.7	-4.8
52ND	686.00	10.9	14.8	704	1465	15.4	10.1	39.4	57.5	-1.6	1.2	-3.9
53RD	699.00	10.3	15.1	564	1465	18.3	10.3	28.5	42.7	-.9	.7	-3.0
54TH	712.00	5.6	15.3	424	1465	13.1	10.4	18.2	27.5	-.5	.4	-1.9
55TH	725.00	12.6	12.2	450	3718	28.0	3.3	12.6	12.2	-.2	.2	-.9

TABLE 7 SHEAR AND MOMENT DIAGRAMS : HOUSTON NATIONAL BANK
WIND DIRECTION 210 CONFIGURATION A REFERENCE PRESSURE 30.0 PSF GUST FACTOR 1.32

FLOOR	HEIGHT FT	X-FORCE KIPS	Y-FORCE KIPS	X-AREA SQ FT	Y-AREA SQ FT	X-PRESS PSF	Y-PRESS PSF	X-SHEAR KIPS	Y-SHEAR KIPS	X-MOMENT 1000-FT-KIPS	Y-MOMENT 1000-FT-KIPS	Z-MOMENT 1000-FT-KIPS
GRND	0.00	2.9	4.8	3024	3024	.9	1.6	109.6	283.2	-136.3	71.5	-13.2
BASE	12.00	1.6	2.0	1512	1512	1.1	1.3	106.7	278.5	-133.0	70.2	-12.9
MEZZ	18.00	5.5	4.6	4536	4536	1.2	1.0	105.1	276.5	-131.3	69.6	-12.8
2ND	36.00	-.4	2.2	3276	6552	-.1	.3	99.6	271.8	-126.4	67.8	-12.9
3RD	49.00	-.0	.3	696	1512	-.0	.2	100.0	269.6	-122.9	66.5	-12.6
SILL	52.00	.0	.3	2320	5040	.0	.1	100.0	269.4	-122.1	66.2	-12.6
4TH	62.00	.3	-.6	3016	6552	.1	-.1	100.0	269.1	-119.4	65.2	-12.5
5TH	75.00	-.1	-5.4	3016	6552	-.0	-.8	99.6	269.7	-115.9	63.9	-12.5
6TH	88.00	-.2	-1.5	1160	2520	-.2	-.6	99.7	275.1	-112.3	62.6	-12.5
DUMY	93.00	-.6	-.8	1483	4032	-.4	-.2	99.9	276.7	-110.9	62.1	-12.4
7TH	101.00	-1.4	1.1	2183	6552	-.6	.2	100.5	277.5	-108.7	61.3	-12.3
8TH	114.00	-1.7	2.0	1903	6552	-.9	.3	101.8	276.3	-105.1	59.9	-12.1
9TH	127.00	-1.0	1.5	909	3528	-1.1	.4	103.6	274.3	-101.5	58.6	-12.1
DUMY	134.00	-.9	1.1	744	1512	-1.2	.7	104.6	272.9	-99.6	57.9	-12.2
10TH	140.00	-2.0	2.1	1612	3276	-1.3	.6	105.4	271.8	-98.0	57.3	-12.2
11TH	153.00	-2.2	1.8	1612	3276	-1.3	.5	107.5	269.7	-94.5	55.9	-12.2
12TH	166.00	-2.3	2.0	1612	3276	-1.4	.6	109.6	267.9	-91.0	54.5	-12.2
13TH	179.00	-2.5	2.2	1612	3276	-1.5	.7	111.9	265.9	-87.5	53.0	-12.1
14TH	192.00	-2.6	2.5	1612	3276	-1.6	.8	114.4	263.7	-84.1	51.5	-12.0
15TH	205.00	-2.7	2.7	1612	3276	-1.7	.8	117.0	261.2	-80.7	50.0	-12.0
16TH	218.00	-2.5	3.0	1612	3276	-1.6	.9	119.7	258.5	-77.3	48.5	-11.9
17TH	231.00	-2.4	3.2	1612	3276	-1.5	1.0	122.2	255.6	-73.9	46.9	-11.8
18TH	244.00	-2.3	3.4	1612	3276	-1.4	1.0	124.6	252.4	-70.6	45.3	-11.6
19TH	257.00	-2.1	3.7	1612	3276	-1.3	1.1	126.9	249.0	-67.4	43.7	-11.5
20TH	270.00	-2.1	3.9	1612	3276	-1.3	1.2	129.0	245.3	-64.2	42.0	-11.3
21ST	283.00	-2.0	4.1	1612	3276	-1.2	1.3	131.1	241.4	-61.0	40.3	-11.2
22ND	296.00	-1.5	4.2	1612	3276	-.9	1.3	133.0	237.2	-57.9	38.6	-11.0
23RD	309.00	-1.1	4.2	1612	3276	-.7	1.3	134.6	233.1	-54.8	36.9	-10.9
24TH	322.00	-.6	4.2	1612	3276	-.3	1.3	135.6	228.8	-51.8	35.1	-10.7
25TH	335.00	-.0	4.2	1612	3276	-.0	1.3	136.2	224.6	-48.9	33.4	-10.6
26TH	348.00	.2	3.8	1612	3276	.1	1.2	136.2	220.4	-46.0	31.6	-10.4
27TH	361.00	.5	3.7	1612	3276	.3	1.1	136.0	216.6	-43.1	29.8	-10.1
28TH	374.00	2.2	4.8	1612	3276	1.4	1.5	135.5	212.9	-40.4	28.1	-9.8
29TH	387.00	.2	5.8	1612	3276	.1	1.8	133.4	208.1	-37.6	26.3	-9.6
30TH	400.00	1.8	6.5	1612	3276	1.1	2.0	133.2	202.4	-34.9	24.6	-9.3
31ST	413.00	2.1	7.2	1612	3276	1.3	2.2	131.4	195.9	-32.4	22.9	-9.0
32ND	426.00	2.3	7.8	1612	2635	1.5	2.9	129.3	188.7	-29.9	21.2	-8.7
33RD	439.00	2.6	8.4	1612	2635	1.6	3.2	126.9	181.0	-27.5	19.5	-8.4
34TH	452.00	2.8	9.1	1612	2635	1.7	3.4	124.4	172.6	-25.2	17.9	-8.0
35TH	465.00	3.3	8.9	1612	2635	2.1	3.4	121.6	163.5	-23.0	16.3	-7.7
36TH	478.00	3.8	8.5	1612	2635	2.4	3.2	118.3	154.6	-20.9	14.7	-7.3
37TH	491.00	5.1	8.2	1612	2635	3.2	3.1	114.5	146.1	-19.0	13.2	-7.0
38TH	504.00	5.6	7.8	1612	2635	3.5	3.0	109.4	137.9	-17.1	11.7	-6.7
39TH	517.00	6.1	7.6	1612	2635	3.8	2.9	103.7	130.0	-15.4	10.4	-6.5
40TH	530.00	6.6	7.3	1612	2635	4.1	2.8	97.6	122.4	-13.7	9.0	-6.2
41ST	543.00	6.7	6.7	1612	2635	4.2	2.5	91.0	115.1	-12.2	7.8	-6.0
42ND	556.00	6.5	6.0	1612	2635	4.0	2.3	84.3	108.5	-10.7	6.7	-5.7
43RD	569.00	8.7	5.3	1612	2635	5.4	2.0	77.8	102.5	-9.4	5.6	-5.5
44TH	582.00	6.6	4.7	1612	2635	4.1	1.8	69.2	97.2	-8.1	4.7	-5.3
45TH	595.00	9.0	4.7	1612	2635	5.6	1.8	62.6	92.5	-6.8	3.8	-5.1
46TH	608.00	8.3	8.4	1542	2635	5.4	3.2	53.6	87.8	-5.7	3.1	-5.0
47TH	621.00	7.0	9.1	1402	1465	5.0	6.2	45.4	79.4	-4.6	2.4	-4.8
48TH	634.00	6.5	9.4	1263	1465	5.2	6.4	38.4	70.2	-3.6	1.9	-4.4

TABLE 7. SHEAR AND MOMENT DIAGRAMS : HOUSTON NATIONAL BANK
WIND DIRECTION 210 CONFIGURATION A REFERENCE PRESSURE 30.0 PSF GUST FACTOR 1.32

FLOOR	HEIGHT FT	X-FORCE KIPS	Y-FORCE KIPS	X-AREA SQ FT	Y-AREA SQ FT	X-PRESS PSF	Y-PRESS PSF	X-SHEAR KIPS	Y-SHEAR KIPS	X-MOMENT	Y-MOMENT	Z-MOMENT
										1000-FT-KIPS		
49TH	647.00	6.0	9.5	1123	1465	5.3	6.5	31.9	60.9	-2.7	1.4	-3.8
50TH	660.00	5.3	9.2	983	1465	5.4	6.3	25.9	51.4	-2.0	1.0	-3.3
51ST	673.00	4.4	9.0	844	1465	5.2	6.2	20.6	42.2	-1.4	.7	-2.7
52ND	686.00	3.4	8.7	704	1465	4.9	5.9	16.2	33.1	-.9	.5	-2.2
53RD	699.00	4.9	8.3	564	1465	8.8	5.7	12.8	24.5	-.5	.3	-1.6
54TH	712.00	2.6	8.8	424	1465	6.2	6.0	7.8	16.2	-.3	.2	-1.1
55TH	725.00	5.2	7.4	450	3718	11.5	2.0	5.2	7.4	-.1	.1	-.5

TABLE 7. SHEAR AND MOMENT DIAGRAMS : HOUSTON NATIONAL BANK
WIND DIRECTION 220 CONFIGURATION A REFERENCE PRESSURE 30.0 PSF GUST FACTOR 1.32

FLOOR	HEIGHT FT	X-FORCE KIPS	Y-FORCE KIPS	X-AREA SQ FT	Y-AREA SQ FT	X-PRESS PSF	Y-PRESS PSF	X-SHEAR KIPS	Y-SHEAR KIPS	X-MOMENT	Y-MOMENT	Z-MOMENT
										1000-FT-KIPS		
GRND	0.00	3.7	-.7	3024	3024	1.2	-.2	496.5	-355.8	161.0	236.0	9.0
BASE	12.00	2.5	-.3	1512	1512	1.6	-.2	492.8	-355.1	156.8	230.1	8.5
MEZZ	18.00	9.7	-.9	4536	4536	2.1	-.2	490.3	-354.8	154.6	227.1	8.2
2ND	36.00	2.9	-1.1	3276	6552	.9	-.2	480.6	-353.9	148.2	218.4	6.9
3RD	49.00	.8	-.5	696	1512	1.1	-.3	477.6	-352.9	143.6	212.2	6.3
SILL	52.00	3.0	-2.3	2320	5040	1.3	-.5	476.9	-352.4	142.6	210.7	6.1
4TH	62.00	4.5	-3.9	3016	6552	1.5	-.6	473.9	-350.1	139.1	206.0	5.6
5TH	75.00	4.0	-6.4	3016	6552	1.3	-1.0	469.4	-346.2	134.6	199.9	4.7
6TH	88.00	1.4	-2.2	1160	2520	1.2	-.9	465.4	-339.8	130.1	193.8	4.1
DUMY	93.00	1.6	-2.9	1483	4032	1.1	-.7	464.0	-337.6	128.4	191.5	3.9
7TH	101.00	2.1	-3.5	2183	6552	1.0	-.5	462.4	-334.6	125.7	187.8	3.7
8TH	114.00	1.9	-2.9	1903	6552	1.0	-.4	460.3	-331.2	121.4	181.8	3.4
9TH	127.00	1.0	-1.3	909	3528	1.1	-.4	458.4	-328.3	117.1	175.8	3.2
DUMY	134.00	.9	-1.2	744	1512	1.2	-.8	457.4	-327.0	114.8	172.6	3.1
10TH	140.00	2.2	-3.0	1612	3276	1.4	-.9	456.5	-325.8	112.8	169.8	3.0
11TH	153.00	2.6	-3.5	1612	3276	1.6	-1.1	454.3	-322.8	108.6	163.9	2.9
12TH	166.00	2.9	-3.4	1612	3276	1.8	-1.0	451.7	-319.3	104.5	158.0	2.8
13TH	179.00	3.2	-3.3	1612	3276	2.0	-1.0	448.8	-315.9	100.3	152.2	2.7
14TH	192.00	3.5	-3.3	1612	3276	2.2	-1.0	445.6	-312.6	96.2	146.4	2.6
15TH	205.00	3.8	-3.2	1612	3276	2.4	-1.0	442.1	-309.3	92.2	140.6	2.6
16TH	218.00	4.0	-3.1	1612	3276	2.5	-.9	438.3	-306.1	88.2	134.9	2.5
17TH	231.00	4.2	-3.0	1612	3276	2.6	-.9	434.4	-303.0	84.2	129.2	2.5
18TH	244.00	4.4	-3.0	1612	3276	2.7	-.9	430.2	-300.0	80.3	123.6	2.5
19TH	257.00	4.6	-2.9	1612	3276	2.8	-.9	425.8	-297.0	76.4	118.0	2.5
20TH	270.00	4.6	-3.4	1612	3276	2.8	-1.0	421.2	-294.1	72.6	112.5	2.6
21ST	283.00	4.6	-4.1	1612	3276	2.8	-1.2	416.6	-290.8	68.8	107.1	2.6
22ND	296.00	4.9	-4.7	1612	3276	3.0	-1.4	412.0	-286.7	65.0	101.7	2.7
23RD	309.00	5.4	-5.4	1612	3276	3.3	-1.7	407.1	-282.0	61.3	96.4	2.8
24TH	322.00	6.2	-6.3	1612	3276	3.8	-1.9	401.8	-276.5	57.7	91.1	2.8
25TH	335.00	7.0	-7.3	1612	3276	4.3	-2.2	395.6	-270.2	54.2	85.9	2.9
26TH	348.00	7.4	-8.6	1612	3276	4.6	-2.6	388.6	-262.9	50.7	80.8	3.0
27TH	361.00	7.6	-9.5	1612	3276	4.7	-2.9	381.3	-254.3	47.3	75.8	3.1
28TH	374.00	9.3	-9.4	1612	3276	5.7	-2.9	373.6	-244.8	44.1	70.9	3.3
29TH	387.00	7.0	-9.4	1612	3276	4.4	-2.9	364.4	-235.5	41.0	66.1	3.4
30TH	400.00	8.6	-9.6	1612	3276	5.3	-2.9	357.3	-226.1	38.0	61.4	3.5
31ST	413.00	9.3	-10.7	1612	3276	5.8	-3.3	348.7	-216.5	35.1	56.8	3.5
32ND	426.00	9.8	-10.2	1612	2635	6.1	-3.9	339.4	-205.8	32.3	52.4	3.6
33RD	439.00	10.4	-10.6	1612	2635	6.4	-4.0	329.6	-195.6	29.7	48.0	3.6
34TH	452.00	11.0	-10.9	1612	2635	6.8	-4.2	319.2	-185.0	27.3	43.8	3.5
35TH	465.00	11.7	-10.2	1612	2635	7.3	-3.9	308.2	-174.1	24.9	39.7	3.4
36TH	478.00	12.4	-9.2	1612	2635	7.7	-3.5	296.5	-163.9	22.7	35.8	3.4
37TH	491.00	13.4	-8.3	1612	2635	8.3	-3.2	284.1	-154.8	20.7	32.0	3.4
38TH	504.00	14.3	-7.5	1612	2635	8.9	-2.9	270.7	-146.4	18.7	28.4	3.5
39TH	517.00	15.3	-6.4	1612	2635	9.5	-2.4	256.4	-138.9	16.8	25.0	3.6
40TH	530.00	16.3	-5.4	1612	2635	10.1	-2.0	241.1	-132.6	15.1	21.7	3.8
41ST	543.00	16.8	-5.4	1612	2635	10.4	-2.1	224.9	-127.2	13.4	18.7	4.0
42ND	556.00	16.5	-5.7	1612	2635	10.2	-2.2	208.1	-121.8	11.8	15.9	4.1
43RD	569.00	19.4	-6.3	1612	2635	12.0	-2.4	191.6	-116.1	10.2	13.3	4.1
44TH	582.00	18.6	-6.9	1612	2635	11.5	-2.6	172.1	-109.8	8.8	10.9	4.1
45TH	595.00	22.1	-7.5	1612	2635	13.7	-2.8	153.5	-102.9	7.4	8.8	4.0
46TH	608.00	21.0	-14.5	1542	2635	13.6	-5.5	131.5	-95.4	6.1	7.0	3.9
47TH	621.00	18.6	-6.9	1402	1465	13.3	-4.7	110.5	-80.9	4.9	5.4	4.0
48TH	634.00	16.8	-8.0	1263	1465	13.3	-5.5	91.9	-74.0	3.9	4.1	3.8

TABLE 7. SHEAR AND MOMENT DIAGRAMS : HOUSTON NATIONAL BANK
WIND DIRECTION 220 CONFIGURATION A REFERENCE PRESSURE 30.0 PSF GUST FACTOR 1.32

FLOOR	HEIGHT FT	X-FORCE KIPS	Y-FORCE KIPS	X-AREA SQ FT	Y-AREA SQ FT	X-PRESS PSF	Y-PRESS PSF	X-SHEAR KIPS	Y-SHEAR KIPS	X-MOMENT	Y-MOMENT	Z-MOMENT
										1000-FT-KIPS		
49TH	647.00	15.1	-9.0	1123	1465	13.5	-6.2	75.1	-65.9	3.0	3.0	3.5
50TH	660.00	13.5	-9.5	983	1465	13.8	-6.5	59.9	-56.9	2.2	2.1	3.1
51ST	673.00	11.5	-10.0	844	1465	13.6	-6.8	46.4	-47.4	1.6	1.4	2.6
52ND	686.00	9.2	-10.1	704	1465	13.1	-6.9	34.9	-37.5	1.0	.9	2.1
53RD	699.00	11.2	-9.9	564	1465	19.9	-6.8	25.7	-27.4	.6	.5	1.6
54TH	712.00	8.2	-9.9	424	1465	19.4	-6.7	14.5	-17.4	.3	.2	1.0
55TH	725.00	6.3	-7.6	450	3718	13.9	-2.0	6.3	-7.6	.1	.1	.4

TABLE 7. SHEAR AND MOMENT DIAGRAMS : HOUSTON NATIONAL BANK
WIND DIRECTION 230 CONFIGURATION A REFERENCE PRESSURE 30.0 PSF GUST FACTOR 1.32

FLOOR	HEIGHT FT	X-FORCE KIPS	Y-FORCE KIPS	X-AREA SQ FT	Y-AREA SQ FT	X-PRESS PSF	Y-PRESS PSF	X-SHEAR KIPS	Y-SHEAR KIPS	X-MOMENT	Y-MOMENT 1000-FT-KIPS	Z-MOMENT
GRND	0.00	16.5	-3.9	3024	3024	5.4	-1.3	1497.8	-911.9	276.9	642.1	-9.3
BASE	12.00	9.3	-1.9	1512	1512	6.1	-1.2	1481.3	-908.0	265.9	624.3	-10.0
MEZZ	18.00	31.5	-5.2	4536	4536	6.9	-1.1	1472.1	-906.1	260.5	615.4	-10.6
2ND	36.00	17.4	-.9	3276	6552	5.3	-.1	1440.5	-901.0	244.2	589.2	-12.7
3RD	49.00	4.0	-1.3	696	1512	5.7	-.8	1423.1	-900.0	232.5	570.6	-13.8
SILL	52.00	13.7	-7.0	2320	5040	5.9	-1.4	1419.1	-898.8	229.8	566.3	-14.1
4TH	62.00	18.2	-16.1	3016	6552	6.0	-2.5	1405.5	-891.8	220.9	552.2	-15.4
5TH	75.00	17.6	-24.0	3016	6552	5.9	-3.7	1387.2	-875.7	209.4	534.0	-17.3
6TH	88.00	6.6	-8.3	1160	2520	5.7	-3.3	1369.6	-851.7	198.2	516.1	-19.1
DUMY	93.00	8.8	-12.0	1483	4032	5.9	-3.0	1363.0	-843.4	193.9	509.3	-19.7
7TH	101.00	12.7	-18.5	2183	6552	5.8	-2.8	1354.2	-831.3	187.2	498.4	-20.4
8TH	114.00	12.1	-21.0	1903	6552	6.3	-3.2	1341.5	-812.9	176.5	480.9	-21.4
9TH	127.00	6.5	-12.4	909	3528	7.2	-3.5	1329.4	-791.8	166.1	463.5	-22.1
DUMY	134.00	5.6	-10.4	744	1512	7.6	-6.9	1322.9	-779.5	160.6	454.3	-22.3
10TH	140.00	12.5	-23.3	1612	3276	7.8	-7.1	1317.3	-769.0	156.0	446.3	-22.5
11TH	153.00	12.9	-24.2	1612	3276	8.0	-7.4	1304.7	-745.7	146.1	429.3	-23.0
12TH	166.00	13.3	-24.9	1612	3276	8.3	-7.6	1291.8	-721.6	136.6	412.4	-23.4
13TH	179.00	13.7	-25.6	1612	3276	8.5	-7.8	1278.5	-696.7	127.4	395.7	-23.7
14TH	192.00	14.1	-26.3	1612	3276	8.7	-8.0	1264.8	-671.1	118.5	379.2	-23.9
15TH	205.00	14.5	-27.0	1612	3276	9.0	-8.2	1250.7	-644.8	109.9	362.8	-23.9
16TH	218.00	15.2	-27.7	1612	3276	9.4	-8.5	1236.1	-617.8	101.7	346.7	-23.8
17TH	231.00	15.8	-28.4	1612	3276	9.8	-8.7	1221.0	-590.1	93.8	330.7	-23.6
18TH	244.00	16.4	-29.1	1612	3276	10.2	-8.9	1205.2	-561.7	86.4	314.9	-23.3
19TH	257.00	17.0	-29.8	1612	3276	10.6	-9.1	1188.8	-532.6	79.2	299.4	-22.9
20TH	270.00	18.5	-29.3	1612	3276	11.5	-9.0	1171.8	-502.8	72.5	284.0	-22.3
21ST	283.00	19.9	-28.5	1612	3276	12.3	-8.7	1153.3	-473.5	66.2	268.9	-21.7
22ND	296.00	21.9	-27.9	1612	3276	13.6	-8.5	1133.4	-444.9	60.2	254.0	-21.1
23RD	309.00	23.1	-27.4	1612	3276	14.4	-8.4	1111.5	-417.0	54.6	239.4	-20.6
24TH	322.00	24.5	-27.3	1612	3276	15.2	-8.3	1088.4	-389.6	49.4	225.1	-20.1
25TH	335.00	25.9	-27.5	1612	3276	16.1	-8.4	1063.8	-362.3	44.5	211.2	-19.6
26TH	348.00	26.9	-29.6	1612	3276	16.7	-9.0	1037.9	-334.8	39.9	197.5	-19.1
27TH	361.00	25.2	-30.4	1612	3276	15.6	-9.3	1011.1	-305.2	35.8	184.2	-18.3
28TH	374.00	26.2	-26.8	1612	3276	16.2	-8.2	985.8	-274.8	32.0	171.2	-17.3
29TH	387.00	28.5	-23.9	1612	3276	17.7	-7.3	959.7	-248.1	28.6	158.6	-16.6
30TH	400.00	29.4	-22.9	1612	3276	18.2	-7.0	931.2	-224.2	25.5	146.3	-16.0
31ST	413.00	30.6	-23.4	1612	3276	19.0	-7.1	901.8	-201.3	22.8	134.3	-15.4
32ND	426.00	31.8	-20.6	1612	2635	19.7	-7.8	871.2	-177.9	20.3	122.8	-14.6
33RD	439.00	33.0	-19.5	1612	2635	20.5	-7.4	839.4	-157.4	18.1	111.7	-13.9
34TH	452.00	34.5	-18.4	1612	2635	21.4	-7.0	806.3	-137.9	16.2	101.0	-13.2
35TH	465.00	37.2	-16.5	1612	2635	23.1	-6.3	771.9	-119.5	14.5	90.8	-12.5
36TH	478.00	40.0	-14.2	1612	2635	24.8	-5.4	734.6	-103.0	13.1	81.0	-11.6
37TH	491.00	43.1	-11.9	1612	2635	26.7	-4.5	694.6	-88.8	11.8	71.7	-10.5
38TH	504.00	44.3	-9.6	1612	2635	27.5	-3.6	651.6	-76.9	10.8	62.9	-9.3
39TH	517.00	45.0	-6.3	1612	2635	27.9	-2.4	607.3	-67.3	9.8	54.7	-8.0
40TH	530.00	45.8	-3.1	1612	2635	28.4	-1.2	562.2	-61.0	9.0	47.1	-6.6
41ST	543.00	46.2	-1.8	1612	2635	28.6	-.7	516.4	-57.9	8.2	40.1	-5.2
42ND	556.00	43.9	-.5	1612	2635	27.2	-.2	470.3	-56.1	7.5	33.7	-4.0
43RD	569.00	44.5	1.0	1612	2635	27.6	.4	426.3	-55.6	6.8	27.9	-2.9
44TH	582.00	52.0	1.7	1612	2635	32.3	.6	381.9	-56.6	6.0	22.6	-2.1
45TH	595.00	51.3	-.5	1612	2635	31.8	-.2	329.9	-58.3	5.3	18.0	-1.4
46TH	608.00	46.9	-5.0	1542	2635	30.4	-1.9	278.6	-57.9	4.5	14.0	-.7
47TH	621.00	41.0	.2	1402	1465	29.3	.1	231.8	-52.9	3.8	10.7	.2
48TH	634.00	36.8	-2.5	1263	1465	29.1	-1.7	190.7	-53.0	3.1	8.0	.6

TABLE 7. SHEAR AND MOMENT DIAGRAMS : HOUSTON NATIONAL BANK
WIND DIRECTION 230 CONFIGURATION A REFERENCE PRESSURE 30.0 PSF GUST FACTOR 1.32

FLOOR	HEIGHT FT	X-FORCE KIPS	Y-FORCE KIPS	X-AREA SQ FT	Y-AREA SQ FT	X-PRESS PSF	Y-PRESS PSF	X-SHEAR KIPS	Y-SHEAR KIPS	X-MOMENT	Y-MOMENT	Z-MOMENT
										1000-FT-KIPS		
49TH	647.00	32.8	-4.8	1123	1465	29.2	-3.3	153.9	-50.6	2.4	5.7	.9
50TH	660.00	29.4	-6.3	983	1465	29.9	-4.3	121.2	-45.8	1.8	4.0	1.0
51ST	673.00	25.3	-7.8	844	1465	30.0	-5.3	91.8	-39.5	1.3	2.6	1.0
52ND	686.00	20.7	-8.9	704	1465	29.5	-6.1	66.5	-31.6	.8	1.5	.9
53RD	699.00	21.5	-9.2	564	1465	38.1	-6.3	45.8	-22.7	.4	.8	.7
54TH	712.00	15.6	-8.1	424	1465	36.8	-5.6	24.3	-13.5	.2	.4	.4
55TH	725.00	8.6	-5.3	450	3718	19.1	-1.4	8.6	-5.3	.1	.1	.1

TABLE 7. SHEAR AND MOMENT DIAGRAMS : HOUSTON NATIONAL BANK
WIND DIRECTION 240 CONFIGURATION A REFERENCE PRESSURE 30.0 PSF GUST FACTOR 1.32

FLOOR	HEIGHT FT	X-FORCE KIPS	Y-FORCE KIPS	X-AREA SQ FT	Y-AREA SQ FT	X-PRESS PSF	Y-PRESS PSF	X-SHEAR KIPS	Y-SHEAR KIPS	X-MOMENT 1000-FT-KIPS	Y-MOMENT 1000-FT-KIPS	Z-MOMENT 1000-FT-KIPS
GRND	0.00	27.3	-8.9	3024	3024	9.0	-3.0	1777.9	-1376.1	420.2	709.8	14.4
BASE	12.00	14.9	-4.8	1512	1512	9.8	-3.2	1750.6	-1367.1	403.7	688.6	12.8
MEZZ	18.00	49.3	-15.9	4536	4536	10.9	-3.5	1735.7	-1362.3	395.5	678.1	11.8
2ND	36.00	29.7	.6	3276	6552	9.1	.1	1686.5	-1346.4	371.1	647.3	8.2
3RD	49.00	6.5	-2.0	696	1512	9.4	-1.3	1656.8	-1347.0	353.6	625.6	6.3
SILL	52.00	22.0	-12.3	2320	5040	9.5	-2.4	1650.2	-1345.0	349.6	620.7	5.8
4TH	62.00	28.7	-29.0	3016	6552	9.5	-4.4	1628.2	-1332.7	336.2	604.3	3.8
5TH	75.00	26.5	-39.5	3016	6552	8.8	-6.0	1599.6	-1303.8	319.1	583.3	.7
6TH	88.00	9.6	-14.1	1160	2520	8.3	-5.6	1573.1	-1264.2	302.4	562.7	-1.9
DUMY	93.00	13.4	-21.8	1483	4032	9.1	-5.4	1563.4	-1250.1	296.1	554.8	-2.7
7TH	101.00	20.3	-34.5	2183	6552	9.3	-5.3	1550.0	-1228.4	286.2	542.4	-3.8
8TH	114.00	19.2	-35.1	1903	6552	10.1	-5.4	1529.7	-1193.9	270.4	522.3	-5.0
9TH	127.00	10.1	-19.2	909	3528	11.2	-5.4	1510.5	-1158.7	255.1	502.6	-5.7
DUMY	134.00	8.7	-17.0	744	1512	11.7	-11.2	1500.3	-1139.5	247.1	492.0	-5.8
10TH	140.00	19.0	-38.1	1612	3276	11.8	-11.6	1491.6	-1122.5	240.3	483.1	-6.0
11TH	153.00	19.3	-39.9	1612	3276	12.0	-12.2	1472.6	-1084.4	226.0	463.8	-6.4
12TH	166.00	19.6	-40.1	1612	3276	12.2	-12.2	1453.3	-1044.5	212.1	444.8	-6.7
13TH	179.00	19.9	-40.2	1612	3276	12.4	-12.3	1433.7	-1004.4	198.8	426.0	-6.9
14TH	192.00	20.2	-40.3	1612	3276	12.5	-12.3	1413.8	-964.2	186.0	407.5	-7.1
15TH	205.00	20.6	-40.5	1612	3276	12.8	-12.4	1393.6	-923.8	173.7	389.3	-7.1
16TH	218.00	21.1	-40.6	1612	3276	13.1	-12.4	1373.0	-883.3	162.0	371.3	-7.0
17TH	231.00	21.6	-40.7	1612	3276	13.4	-12.4	1351.9	-842.7	150.8	353.6	-6.9
18TH	244.00	22.2	-40.9	1612	3276	13.8	-12.5	1330.3	-802.0	140.1	336.1	-6.6
19TH	257.00	22.8	-41.0	1612	3276	14.1	-12.5	1308.1	-761.2	129.9	319.0	-6.3
20TH	270.00	24.4	-39.2	1612	3276	15.1	-12.0	1285.3	-720.2	120.3	302.1	-5.8
21ST	283.00	26.0	-37.0	1612	3276	16.1	-11.3	1260.9	-681.0	111.2	285.6	-5.5
22ND	296.00	27.9	-35.3	1612	3276	17.3	-10.8	1234.9	-643.9	102.6	269.4	-5.2
23RD	309.00	29.1	-33.6	1612	3276	18.0	-10.3	1207.0	-608.6	94.4	253.5	-5.0
24TH	322.00	30.1	-32.4	1612	3276	18.7	-9.9	1178.0	-575.0	86.7	238.0	-5.0
25TH	335.00	31.1	-31.5	1612	3276	19.3	-9.6	1147.9	-542.5	79.5	222.9	-4.9
26TH	348.00	31.7	-33.1	1612	3276	19.7	-10.1	1116.8	-511.0	72.6	208.1	-4.9
27TH	361.00	32.3	-33.9	1612	3276	20.0	-10.3	1085.1	-477.9	66.2	193.8	-4.6
28TH	374.00	34.6	-30.8	1612	3276	21.5	-9.4	1052.8	-444.0	60.2	179.9	-4.1
29TH	387.00	32.5	-28.3	1612	3276	20.2	-8.6	1018.2	-413.2	54.6	166.5	-3.7
30TH	400.00	34.0	-27.4	1612	3276	21.1	-8.4	985.7	-384.9	49.5	153.4	-3.5
31ST	413.00	35.0	-27.3	1612	3276	21.7	-8.3	951.7	-357.5	44.6	140.9	-3.3
32ND	426.00	35.9	-25.5	1612	2635	22.3	-9.7	916.6	-330.2	40.2	128.7	-2.9
33RD	439.00	36.8	-24.6	1612	2635	22.8	-9.3	880.8	-304.8	36.0	117.0	-2.5
34TH	452.00	37.8	-23.7	1612	2635	23.4	-9.0	844.0	-280.2	32.2	105.8	-2.2
35TH	465.00	39.4	-22.2	1612	2635	24.5	-8.4	806.2	-256.5	28.7	95.1	-1.8
36TH	478.00	41.1	-20.7	1612	2635	25.5	-7.8	766.8	-234.4	25.5	84.9	-1.3
37TH	491.00	43.2	-19.5	1612	2635	26.8	-7.4	725.7	-213.7	22.6	75.2	-.8
38TH	504.00	44.3	-18.4	1612	2635	27.5	-7.0	682.6	-194.2	20.0	66.0	-.3
39TH	517.00	45.8	-16.3	1612	2635	28.4	-6.2	638.2	-175.7	17.6	57.4	.3
40TH	530.00	47.3	-14.2	1612	2635	29.4	-5.4	592.4	-159.4	15.4	49.4	1.0
41ST	543.00	48.1	-13.3	1612	2635	29.8	-5.1	545.1	-145.2	13.4	42.0	1.6
42ND	556.00	47.0	-12.4	1612	2635	29.2	-4.7	497.0	-131.9	11.6	35.3	2.1
43RD	569.00	51.3	-11.0	1612	2635	31.8	-4.2	450.0	-119.5	10.0	29.1	2.5
44TH	582.00	53.8	-9.8	1612	2635	33.4	-3.7	398.7	-108.4	8.5	23.6	2.7
45TH	595.00	53.8	-9.2	1612	2635	33.4	-3.5	344.9	-98.6	7.2	18.8	2.9
46TH	608.00	49.8	-7.8	1542	2635	32.3	-3.0	291.1	-89.5	5.9	14.6	2.9
47TH	621.00	43.7	-7.9	1402	1465	31.2	-5.4	241.4	-81.6	4.8	11.2	2.9
48TH	634.00	38.3	-8.4	1263	1465	30.3	-5.8	197.6	-73.7	3.8	8.3	2.8

TABLE 7. SHEAR AND MOMENT DIAGRAMS : HOUSTON NATIONAL BANK
WIND DIRECTION 240 CONFIGURATION A REFERENCE PRESSURE 30.0 PSF GUST FACTOR 1.32

FLOOR	HEIGHT FT	X-FORCE KIPS	Y-FORCE KIPS	X-AREA SQ FT	Y-AREA SQ FT	X-PRESS PSF	Y-PRESS PSF	X-SHEAR KIPS	Y-SHEAR KIPS	X-MOMENT	Y-MOMENT	Z-MOMENT
										1000-FT-KIPS		
49TH	647.00	33.6	-8.9	1123	1465	29.9	-6.1	159.4	-65.3	2.9	6.0	2.7
50TH	660.00	30.3	-9.5	983	1465	30.8	-6.5	125.7	-56.4	2.1	4.1	2.5
51ST	673.00	26.3	-10.0	844	1465	31.1	-6.8	95.4	-46.9	1.4	2.7	2.2
52ND	686.00	21.7	-10.8	704	1465	30.8	-7.4	69.2	-36.9	.9	1.6	1.9
53RD	699.00	21.6	-11.3	564	1465	38.3	-7.7	47.5	-26.1	.5	.9	1.4
54TH	712.00	16.4	-9.2	424	1465	38.6	-6.3	25.9	-14.9	.2	.4	.8
55TH	725.00	9.5	-5.7	450	3718	21.1	-1.5	9.5	-5.7	.1	.2	.3

TABLE 7. SHEAR AND MOMENT DIAGRAMS : HOUSTON NATIONAL BANK
WIND DIRECTION 250 CONFIGURATION A REFERENCE PRESSURE 30.0 PSF GUST FACTOR 1.32

FLOOR	HEIGHT FT	X-FORCE KIPS	Y-FORCE KIPS	X-AREA SQ FT	Y-AREA SQ FT	X-PRESS PSF	Y-PRESS PSF	X-SHEAR KIPS	Y-SHEAR KIPS	X-MOMENT	Y-MOMENT	Z-MOMENT
										1000-FT-KIPS		
GRND	0.00	30.0	-16.3	3024	3024	9.9	-5.4	1824.4	-2367.9	780.5	701.5	41.0
BASE	12.00	16.8	-9.0	1512	1512	11.1	-5.9	1794.4	-2351.6	752.2	679.8	39.1
MEZZ	18.00	57.3	-30.4	4536	4536	12.6	-6.7	1777.5	-2342.6	738.1	669.1	37.8
2ND	36.00	34.0	-12.7	3276	6552	10.4	-1.9	1720.2	-2312.2	696.2	637.6	33.1
3RD	49.00	7.4	-5.4	696	1512	10.6	-3.5	1686.2	-2299.5	666.2	615.4	30.4
SILL	52.00	24.7	-24.5	2320	5040	10.7	-4.9	1678.8	-2294.2	659.3	610.4	29.7
4TH	62.00	31.6	-48.7	3016	6552	10.5	-7.4	1654.1	-2269.7	636.5	593.7	27.2
5TH	75.00	28.9	-62.0	3016	6552	9.6	-9.5	1622.4	-2221.1	607.3	572.4	23.7
6TH	88.00	10.4	-23.0	1160	2520	8.9	-9.1	1593.5	-2159.0	578.8	551.5	20.9
DUMY	93.00	14.5	-36.5	1483	4032	9.7	-9.0	1583.2	-2136.1	568.1	543.6	20.1
7TH	101.00	21.7	-57.4	2183	6552	9.9	-8.8	1568.7	-2099.6	551.2	531.0	18.9
8TH	114.00	20.8	-53.3	1903	6552	10.9	-8.1	1547.0	-2042.2	524.2	510.7	17.5
9TH	127.00	11.2	-27.1	909	3528	12.4	-7.7	1526.2	-1988.9	498.0	490.7	17.0
DUMY	134.00	9.7	-25.1	744	1512	13.1	-16.6	1515.0	-1961.8	484.2	480.1	17.0
10TH	140.00	21.3	-56.1	1612	3276	13.2	-17.1	1505.2	-1936.7	472.5	471.0	16.9
11TH	153.00	21.6	-58.5	1612	3276	13.4	-17.9	1484.0	-1880.6	447.7	451.6	16.7
12TH	166.00	21.8	-58.9	1612	3276	13.6	-18.0	1462.4	-1822.1	423.6	432.5	16.5
13TH	179.00	22.1	-59.2	1612	3276	13.7	-18.1	1440.5	-1763.2	400.3	413.6	16.5
14TH	192.00	22.4	-59.6	1612	3276	13.9	-18.2	1418.4	-1704.0	377.8	395.0	16.5
15TH	205.00	22.8	-59.9	1612	3276	14.1	-18.3	1396.0	-1644.4	356.0	376.7	16.6
16TH	218.00	23.5	-60.2	1612	3276	14.6	-18.4	1373.2	-1584.5	335.0	358.7	16.8
17TH	231.00	24.2	-60.5	1612	3276	15.0	-18.5	1349.7	-1524.3	314.8	341.0	17.1
18TH	244.00	24.9	-60.8	1612	3276	15.4	-18.6	1325.5	-1463.8	295.4	323.6	17.4
19TH	257.00	25.7	-61.2	1612	3276	15.9	-18.7	1300.7	-1403.0	276.8	306.6	17.9
20TH	270.00	27.5	-59.0	1612	3276	17.1	-18.0	1275.0	-1341.8	258.9	289.8	18.4
21ST	283.00	29.4	-56.3	1612	3276	18.2	-17.2	1247.5	-1282.8	241.9	273.4	18.9
22ND	296.00	31.4	-54.1	1612	3276	19.5	-16.5	1218.1	-1226.6	225.6	257.4	19.1
23RD	309.00	32.4	-52.0	1612	3276	20.1	-15.9	1186.7	-1172.4	210.0	241.8	19.2
24TH	322.00	33.0	-50.7	1612	3276	20.5	-15.5	1154.3	-1120.4	195.1	226.5	19.2
25TH	335.00	33.7	-49.7	1612	3276	20.9	-15.2	1121.3	-1069.8	180.8	211.8	19.1
26TH	348.00	33.9	-49.7	1612	3276	21.1	-15.2	1087.6	-1020.1	167.3	197.4	19.0
27TH	361.00	31.8	-49.3	1612	3276	19.7	-15.1	1053.6	-970.3	154.3	183.5	19.0
28TH	374.00	32.4	-46.9	1612	3276	20.1	-14.3	1021.8	-921.0	142.0	170.0	19.1
29TH	387.00	35.8	-44.9	1612	3276	22.2	-13.7	989.4	-874.1	130.4	156.9	19.0
30TH	400.00	36.3	-44.1	1612	3276	22.5	-13.5	953.6	-829.2	119.3	144.3	18.7
31ST	413.00	36.7	-44.6	1612	3276	22.8	-13.6	917.3	-785.1	108.8	132.1	18.3
32ND	426.00	37.2	-43.0	1612	2635	23.1	-16.3	880.6	-740.5	98.9	120.4	18.0
33RD	439.00	37.7	-42.6	1612	2635	23.4	-16.2	843.4	-697.5	89.5	109.2	17.6
34TH	452.00	38.4	-42.1	1612	2635	23.8	-16.0	805.7	-654.9	80.7	98.5	17.2
35TH	465.00	40.2	-41.6	1612	2635	24.9	-15.8	767.3	-612.8	72.5	88.3	16.8
36TH	478.00	42.0	-41.1	1612	2635	26.0	-15.6	727.2	-571.2	64.8	78.6	16.5
37TH	491.00	44.1	-40.6	1612	2635	27.4	-15.4	685.2	-530.1	57.6	69.4	16.3
38TH	504.00	44.7	-40.0	1612	2635	27.8	-15.2	641.0	-489.5	51.0	60.8	16.2
39TH	517.00	45.4	-38.1	1612	2635	28.2	-14.5	596.3	-449.5	44.9	52.7	16.1
40TH	530.00	46.1	-35.9	1612	2635	28.6	-13.6	550.9	-411.3	39.3	45.3	16.0
41ST	543.00	46.4	-34.1	1612	2635	28.8	-12.9	504.8	-375.4	34.2	38.4	15.9
42ND	556.00	43.8	-31.6	1612	2635	27.2	-12.0	458.4	-341.4	29.5	32.2	15.7
43RD	569.00	44.3	-27.9	1612	2635	27.5	-10.6	414.5	-309.7	25.3	26.5	15.3
44TH	582.00	53.4	-24.8	1612	2635	33.1	-9.4	370.3	-281.8	21.5	21.4	14.7
45TH	595.00	49.3	-23.6	1612	2635	30.6	-9.0	316.9	-257.0	18.0	16.9	13.8
46TH	608.00	45.6	-24.8	1542	2635	29.6	-9.4	267.6	-233.4	14.8	13.1	12.9
47TH	621.00	40.8	-22.4	1402	1465	29.1	-15.3	221.9	-208.6	11.9	9.9	12.0
48TH	634.00	36.5	-23.4	1263	1465	28.9	-16.0	181.1	-186.2	9.3	7.3	11.0

TABLE 7. SHEAR AND MOMENT DIAGRAMS : HOUSTON NATIONAL BANK
WIND DIRECTION 250 CONFIGURATION A REFERENCE PRESSURE 30.0 PSF GUST FACTOR 1.32

FLOOR	HEIGHT FT	X-FORCE KIPS	Y-FORCE KIPS	X-AREA SQ FT	Y-AREA SQ FT	X-PRESS PSF	Y-PRESS PSF	X-SHEAR KIPS	Y-SHEAR KIPS	X-MOMENT	Y-MOMENT	Z-MOMENT
										1000-FT-KIPS		
49TH	647.00	32.5	-24.3	1123	1465	28.9	-16.6	144.6	-162.8	7.1	5.2	9.9
50TH	660.00	28.4	-25.0	983	1465	28.9	-17.0	112.1	-138.5	5.1	3.5	8.6
51ST	673.00	23.9	-25.6	844	1465	28.4	-17.5	83.8	-113.5	3.5	2.3	7.2
52ND	686.00	19.3	-26.3	704	1465	27.4	-18.0	59.8	-87.9	2.2	1.3	5.7
53RD	699.00	19.5	-26.1	564	1465	34.5	-17.8	40.5	-61.6	1.2	.7	4.1
54TH	712.00	15.3	-21.4	424	1465	35.9	-14.6	21.0	-35.5	.6	.3	2.4
55TH	725.00	5.8	-14.0	450	3718	12.9	-3.8	5.8	-14.0	.2	.1	1.0

TABLE 7. SHEAR AND MOMENT DIAGRAMS : HOUSTON NATIONAL BANK
WIND DIRECTION 260 CONFIGURATION A REFERENCE PRESSURE 30.0 PSF GUST FACTOR 1.32

FLOOR	HEIGHT FT	X-FORCE KIPS	Y-FORCE KIPS	X-AREA SQ FT	Y-AREA SQ FT	X-PRESS PSF	Y-PRESS PSF	X-SHEAR KIPS	Y-SHEAR KIPS	X-MOMENT	Y-MOMENT 1000-FT-KIPS	Z-MOMENT
GRND	0.00	33.8	-24.9	3024	3024	11.2	-8.2	1861.5	-2936.5	1017.1	687.5	65.8
BASE	12.00	19.5	-13.7	1512	1512	12.9	-9.0	1827.7	-2911.6	982.0	665.3	63.6
MEZZ	18.00	68.1	-45.8	4536	4536	15.0	-10.1	1808.2	-2897.9	964.6	654.4	62.2
2ND	36.00	40.0	-24.0	3276	6552	12.2	-3.7	1740.1	-2852.1	912.9	622.5	56.5
3RD	49.00	8.5	-8.1	696	1512	12.3	-5.4	1700.1	-2828.1	875.9	600.1	53.7
SILL	52.00	28.2	-33.9	2320	5040	12.1	-6.7	1691.6	-2820.0	867.5	595.0	53.1
4TH	62.00	35.4	-62.2	3016	6552	11.8	-9.5	1663.4	-2786.2	839.4	578.3	50.6
5TH	75.00	32.2	-78.9	3016	6552	10.7	-12.0	1628.0	-2723.9	803.6	556.9	47.1
6TH	88.00	11.5	-28.6	1160	2520	9.9	-11.3	1595.7	-2645.0	768.7	535.9	44.2
DUMY	93.00	16.0	-43.7	1483	4032	10.8	-10.8	1584.2	-2616.5	755.6	528.0	43.3
7TH	101.00	23.7	-65.3	2183	6552	10.9	-10.0	1568.2	-2572.8	734.8	515.4	42.0
8TH	114.00	22.5	-57.3	1903	6552	11.8	-8.7	1544.5	-2507.5	701.8	495.1	40.4
9TH	127.00	12.1	-27.6	909	3528	13.3	-7.8	1522.0	-2450.2	669.6	475.2	39.8
DUMY	134.00	10.5	-26.2	744	1512	14.1	-17.3	1509.9	-2422.6	652.5	464.6	39.8
10TH	140.00	23.0	-57.9	1612	3276	14.3	-17.7	1499.4	-2396.5	638.1	455.6	39.7
11TH	153.00	23.4	-59.6	1612	3276	14.5	-18.2	1476.4	-2338.5	607.3	436.2	39.3
12TH	166.00	23.8	-60.1	1612	3276	14.8	-18.3	1452.9	-2278.9	577.3	417.2	39.0
13TH	179.00	24.2	-60.5	1612	3276	15.0	-18.5	1429.1	-2218.8	548.0	398.4	38.8
14TH	192.00	24.6	-60.9	1612	3276	15.3	-18.6	1404.9	-2158.4	519.6	380.0	38.6
15TH	205.00	25.0	-61.2	1612	3276	15.5	-18.7	1380.3	-2097.5	491.9	361.9	38.5
16TH	218.00	25.7	-61.6	1612	3276	15.9	-18.8	1355.3	-2036.3	465.0	344.1	38.5
17TH	231.00	26.4	-62.0	1612	3276	16.4	-18.9	1329.6	-1974.6	439.0	326.7	38.5
18TH	244.00	27.0	-62.4	1612	3276	16.8	-19.1	1303.2	-1912.6	413.7	309.6	38.6
19TH	257.00	27.7	-62.8	1612	3276	17.2	-19.2	1276.2	-1850.2	389.3	292.8	38.7
20TH	270.00	28.8	-62.3	1612	3276	17.9	-19.0	1248.5	-1787.4	365.6	276.4	38.9
21ST	283.00	30.0	-61.6	1612	3276	18.6	-18.8	1219.7	-1725.0	342.8	260.3	39.0
22ND	296.00	31.7	-61.0	1612	3276	19.7	-18.6	1189.7	-1663.4	320.8	244.7	38.9
23RD	309.00	32.7	-60.3	1612	3276	20.3	-18.4	1158.0	-1602.4	299.5	229.4	38.7
24TH	322.00	33.8	-60.2	1612	3276	20.9	-18.4	1125.3	-1542.1	279.1	214.6	38.3
25TH	335.00	34.8	-60.2	1612	3276	21.6	-18.4	1091.5	-1481.9	259.4	200.2	37.8
26TH	348.00	35.4	-61.2	1612	3276	22.0	-18.7	1056.7	-1421.7	240.6	186.2	37.2
27TH	361.00	34.9	-61.6	1612	3276	21.7	-18.8	1021.3	-1360.5	222.5	172.7	36.6
28TH	374.00	36.7	-60.0	1612	3276	22.8	-18.3	986.4	-1298.8	205.2	159.7	36.0
29TH	387.00	37.0	-58.9	1612	3276	22.9	-18.0	949.6	-1238.8	188.7	147.1	35.2
30TH	400.00	36.9	-59.3	1612	3276	22.9	-18.1	912.7	-1179.9	173.0	135.0	34.3
31ST	413.00	37.1	-60.8	1612	3276	23.0	-18.6	875.8	-1120.6	158.0	123.3	33.4
32ND	426.00	37.3	-59.4	1612	2635	23.1	-22.5	838.7	-1059.7	143.8	112.2	32.7
33RD	439.00	37.4	-59.5	1612	2635	23.2	-22.6	801.4	-1000.4	130.5	101.5	31.8
34TH	452.00	37.8	-59.5	1612	2635	23.5	-22.6	764.0	-940.9	117.8	91.4	30.9
35TH	465.00	39.2	-57.9	1612	2635	24.3	-22.0	726.2	-881.4	106.0	81.7	30.0
36TH	478.00	40.7	-56.0	1612	2635	25.2	-21.2	686.9	-823.5	94.9	72.5	29.1
37TH	491.00	42.7	-54.5	1612	2635	26.5	-20.7	646.3	-767.5	84.6	63.8	28.3
38TH	504.00	43.3	-53.1	1612	2635	26.9	-20.1	603.6	-713.0	74.9	55.7	27.5
39TH	517.00	43.9	-51.7	1612	2635	27.2	-19.6	560.3	-659.9	66.0	48.1	26.7
40TH	530.00	44.5	-50.5	1612	2635	27.6	-19.2	516.4	-608.2	57.8	41.1	26.1
41ST	543.00	44.7	-50.0	1612	2635	27.7	-19.0	471.9	-557.7	50.2	34.7	25.4
42ND	556.00	44.3	-48.3	1612	2635	27.5	-18.3	427.2	-507.7	43.3	28.9	24.7
43RD	569.00	46.7	-43.0	1612	2635	29.0	-16.3	382.9	-459.3	37.0	23.6	24.0
44TH	582.00	51.1	-38.0	1612	2635	31.7	-14.4	336.2	-416.4	31.3	18.9	23.0
45TH	595.00	45.9	-34.4	1612	2635	28.5	-13.1	285.1	-378.4	26.1	14.9	21.6
46TH	608.00	42.3	-38.8	1542	2635	27.4	-14.7	239.1	-344.0	21.4	11.5	20.1
47TH	621.00	37.5	-34.6	1402	1465	26.8	-23.6	196.8	-305.1	17.2	8.6	18.7
48TH	634.00	32.7	-35.0	1263	1465	25.9	-23.9	159.3	-270.6	13.5	6.3	16.9

TABLE 7. SHEAR AND MOMENT DIAGRAMS ; HOUSTON NATIONAL BANK
WIND DIRECTION 260 CONFIGURATION A REFERENCE PRESSURE 39.0 PSF GUST FACTOR 1.32

FLOOR	HEIGHT FT	X-FORCE KIPS	Y-FORCE KIPS	X-AREA SQ FT	Y-AREA SQ FT	X-PRESS PSF	Y-PRESS PSF	X-SHEAR KIPS	Y-SHEAR KIPS	X-MOMENT	Y-MOMENT	Z-MOMENT
										1000-FT-KIPS		
49TH	647.00	28.6	-35.5	1123	1465	25.5	-24.3	126.6	-235.6	10.2	4.5	15.0
50TH	660.00	25.2	-36.3	983	1465	25.6	-24.8	98.0	-200.0	7.4	3.0	13.0
51ST	673.00	21.5	-37.1	844	1465	25.4	-25.3	72.8	-163.7	5.0	1.9	10.8
52ND	686.00	17.5	-38.0	704	1465	24.8	-25.9	51.4	-126.6	3.1	1.1	8.5
53RD	699.00	16.4	-37.6	564	1465	29.1	-25.7	33.9	-88.6	1.7	.5	6.1
54TH	712.00	13.3	-30.8	424	1465	31.4	-21.1	17.5	-51.0	.8	.2	3.6
55TH	725.00	4.2	-20.2	450	3718	9.3	-5.4	4.2	-20.2	.3	.1	1.5

TABLE 7. SHEAR AND MOMENT DIAGRAMS : HOUSTON NATIONAL BANK

WIND DIRECTION 270 CONFIGURATION A REFERENCE PRESSURE 30.0 PSF GUST FACTOR .32

FLOOR	HEIGHT FT	X-FORCE KIPS	Y-FORCE KIPS	X-AREA SQ FT	Y-AREA SQ FT	X-PRESS PSF	Y-PRESS PSF	X-SHEAR KIPS	Y-SHEAR KIPS	X-MOMENT	Y-MOMENT	Z-MOMENT
										1000-FT-KIPS		
GRND	0.00	32.5	-34.4	3024	3024	10.7	-11.4	1537.5	-3589.0	1249.0	533.1	84.9
BASE	12.00	19.2	-18.6	1512	1512	12.7	-12.3	1505.0	-3554.6	1206.2	514.9	82.9
MEZZ	18.00	69.0	-61.1	4536	4536	15.2	-13.5	1485.7	-3536.0	1184.9	505.9	81.5
2ND	36.00	39.7	-34.0	3276	6552	12.1	-5.2	1416.7	-3474.9	1121.8	479.8	75.6
3RD	49.00	8.5	-10.6	696	1512	12.1	-7.0	1377.0	-3440.9	1076.8	461.6	72.8
SILL	52.00	27.9	-43.1	2320	5040	12.0	-8.6	1368.6	-3430.3	1066.5	457.5	72.1
4TH	62.00	35.0	-74.3	3016	6552	11.6	-11.3	1340.7	-3387.2	1032.4	444.0	69.5
5TH	75.00	32.0	-92.6	3016	6552	10.6	-14.1	1305.7	-3312.8	988.9	426.8	65.9
6TH	88.00	11.5	-33.3	1160	2520	9.9	-13.2	1273.6	-3220.2	946.4	410.0	62.9
DUMY	93.00	15.5	-50.2	1483	4032	10.5	-12.5	1262.1	-3186.9	930.4	403.7	61.9
7TH	101.00	22.6	-74.7	2183	6552	10.3	-11.4	1246.6	-3136.7	905.1	393.6	60.6
8TH	114.00	21.2	-67.0	1903	6552	11.1	-10.2	1224.0	-3062.0	864.8	377.6	59.1
9TH	127.00	11.4	-32.9	909	3528	12.5	-9.3	1202.9	-2995.1	825.4	361.8	58.7
DUMY	134.00	9.8	-30.6	744	1512	13.2	-20.2	1191.5	-2962.2	804.6	353.4	58.8
10TH	140.00	21.5	-68.0	1612	3276	13.3	-20.8	1181.7	-2931.6	786.9	346.3	58.8
11TH	153.00	21.8	-70.4	1612	3276	13.5	-21.5	1160.1	-2863.6	749.2	331.1	58.6
12TH	166.00	22.1	-71.2	1612	3276	13.7	-21.7	1138.4	-2793.2	712.5	316.1	58.4
13TH	179.00	22.3	-72.0	1612	3276	13.9	-22.0	1116.3	-2721.9	676.6	301.5	58.2
14TH	192.00	22.6	-72.7	1612	3276	14.0	-22.2	1094.0	-2649.9	641.7	287.1	58.0
15TH	205.00	22.8	-73.5	1612	3276	14.1	-22.4	1071.4	-2577.2	607.7	273.0	57.9
16TH	218.00	22.7	-74.2	1612	3276	14.1	-22.7	1048.6	-2503.7	574.7	259.2	57.8
17TH	231.00	22.6	-75.0	1612	3276	14.0	-22.9	1025.9	-2429.5	542.6	245.8	57.7
18TH	244.00	22.5	-75.7	1612	3276	14.0	-23.1	1003.3	-2354.5	511.5	232.6	57.6
19TH	257.00	22.5	-76.5	1612	3276	14.0	-23.3	980.7	-2278.8	481.4	219.7	57.5
20TH	270.00	23.6	-75.8	1612	3276	14.6	-23.1	958.2	-2203.3	452.3	207.1	57.4
21ST	283.00	24.6	-75.0	1612	3276	15.3	-22.9	934.6	-2126.5	424.2	194.8	57.2
22ND	296.00	26.6	-74.7	1612	3276	16.5	-22.8	910.1	-2051.5	397.0	182.8	56.8
23RD	309.00	27.3	-74.5	1612	3276	16.9	-22.7	883.5	-1976.8	370.8	171.1	56.3
24TH	322.00	27.8	-73.9	1612	3276	17.2	-22.6	856.2	-1902.3	345.6	159.8	55.6
25TH	335.00	28.3	-73.2	1612	3276	17.6	-22.3	828.4	-1828.4	321.4	148.9	54.7
26TH	348.00	28.6	-74.1	1612	3276	17.7	-22.6	800.1	-1755.2	298.1	138.3	53.7
27TH	361.00	29.1	-74.4	1612	3276	18.0	-22.7	771.5	-1681.1	275.7	128.1	52.6
28TH	374.00	30.8	-72.1	1612	3276	19.1	-22.0	742.4	-1606.7	254.4	118.2	51.5
29TH	387.00	29.7	-70.5	1612	3276	18.4	-21.5	711.7	-1534.6	233.9	108.8	50.1
30TH	400.00	29.5	-70.9	1612	3276	18.3	-21.6	681.9	-1464.1	214.5	99.7	48.6
31ST	413.00	29.4	-72.0	1612	3276	18.3	-22.0	652.5	-1393.2	195.9	91.0	47.1
32ND	426.00	29.4	-70.1	1612	2635	18.3	-26.6	623.1	-1321.2	179.2	82.7	45.8
33RD	439.00	29.5	-69.7	1612	2635	18.3	-26.4	593.6	-1251.2	161.5	74.8	44.3
34TH	452.00	29.6	-69.3	1612	2635	18.3	-26.3	564.2	-1181.5	145.7	67.3	42.7
35TH	465.00	30.1	-69.0	1612	2635	18.7	-26.2	534.6	-1112.2	130.8	60.2	41.0
36TH	478.00	30.7	-68.4	1612	2635	19.1	-26.0	504.4	-1043.2	116.8	53.4	39.4
37TH	491.00	31.6	-67.6	1612	2635	19.6	-25.7	473.7	-974.8	103.7	47.1	37.9
38TH	504.00	31.7	-66.8	1612	2635	19.7	-25.4	442.1	-907.2	91.4	41.1	36.4
39TH	517.00	31.7	-67.7	1612	2635	19.7	-25.7	410.4	-840.4	80.1	35.6	35.0
40TH	530.00	31.7	-69.0	1612	2635	19.7	-26.2	378.7	-772.6	69.6	30.4	33.6
41ST	543.00	31.6	-69.8	1612	2635	19.6	-26.5	347.0	-703.6	60.0	25.7	32.3
42ND	556.00	32.5	-68.1	1612	2635	20.2	-25.9	315.4	-633.8	51.3	21.4	31.1
43RD	569.00	34.9	-59.7	1612	2635	21.6	-22.7	282.9	-565.7	43.5	17.5	29.9
44TH	582.00	34.5	-51.6	1612	2635	21.4	-19.6	248.0	-506.0	36.5	14.1	28.3
45TH	595.00	35.2	-44.6	1612	2635	21.9	-16.9	213.4	-454.4	30.3	11.1	26.5
46TH	608.00	32.6	-50.2	1542	2635	21.2	-19.1	178.2	-409.8	24.7	8.5	24.2
47TH	621.00	28.3	-43.6	1402	1465	20.2	-29.8	145.6	-359.6	19.7	6.4	22.2
48TH	634.00	23.8	-43.8	1263	1465	18.8	-29.9	117.3	-316.0	15.3	4.7	19.8

TABLE 7. SHEAR AND MOMENT DIAGRAMS : HOUSTON NATIONAL BANK
WIND DIRECTION 270 CONFIGURATION A REFERENCE PRESSURE 30.0 PSF GUST FACTOR 1.32

FLOOR	HEIGHT FT	X-FORCE KIPS	Y-FORCE KIPS	X-AREA SQ FT	Y-AREA SQ FT	X-PRESS PSF	Y-PRESS PSF	X-SHEAR KIPS	Y-SHEAR KIPS	X-MOMENT	Y-MOMENT	Z-MOMENT
										1000-FT-KIPS		
49TH	647.00	20.4	-43.9	1123	1465	18.2	-30.0	93.5	-272.2	11.5	3.3	17.3
50TH	660.00	18.4	-43.8	983	1465	18.7	-29.9	73.1	-228.3	8.2	2.3	14.7
51ST	673.00	15.9	-43.7	844	1465	18.8	-29.9	54.7	-184.5	5.5	1.4	12.1
52ND	686.00	13.0	-43.3	704	1465	18.5	-29.6	38.8	-140.8	3.4	.8	9.4
53RD	699.00	12.8	-41.5	564	1465	22.7	-28.3	25.8	-97.4	1.9	.4	6.6
54TH	712.00	9.9	-33.9	424	1465	23.4	-23.2	13.0	-56.0	.9	.2	3.9
55TH	725.00	3.0	-22.0	450	3718	6.7	-5.9	3.0	-22.0	.4	.0	1.6

TABLE 7. SHEAR AND MOMENT DIAGRAMS : HOUSTON NATIONAL BANK
WIND DIRECTION 280 CONFIGURATION A REFERENCE PRESSURE 30.0 PSF GUST FACTOR 1.32

FLOOR	HEIGHT FT	X-FORCE KIPS	Y-FORCE KIPS	X-AREA SQ FT	Y-AREA SQ FT	X-PRESS PSF	Y-PRESS PSF	X-SHEAR KIPS	Y-SHEAR KIPS	X-MOMENT	Y-MOMENT 1000-FT-KIPS	Z-MOMENT
GRND	0.00	29.3	-43.8	3024	3024	9.7	-14.5	1097.2	-4037.1	1435.7	340.0	93.2
BASE	12.00	18.5	-22.9	1512	1512	12.2	-15.1	1067.9	-3993.3	1387.5	327.0	91.7
MEZZ	18.00	69.8	-72.3	4536	4536	15.4	-15.9	1049.4	-3970.5	1363.6	320.6	90.5
2ND	36.00	39.0	-46.3	3276	6552	11.9	-7.1	979.6	-3898.1	1292.8	302.3	84.5
3RD	49.00	8.1	-12.8	696	1512	11.7	-8.4	940.6	-3851.9	1242.4	289.9	81.6
SILL	52.00	26.5	-48.2	2320	5040	11.4	-9.6	932.5	-3839.1	1230.9	287.1	81.0
4TH	62.00	32.5	-77.9	3016	6552	10.8	-11.9	906.0	-3790.9	1192.8	277.9	78.7
5TH	75.00	29.0	-95.8	3016	6552	9.6	-14.6	873.5	-3713.0	1144.0	266.3	75.6
6TH	88.00	10.2	-35.0	1160	2520	8.8	-13.9	844.5	-3617.3	1096.3	255.1	73.1
DUMY	93.00	14.1	-53.2	1483	4032	9.5	-13.2	834.3	-3582.2	1078.3	250.9	72.4
7TH	101.00	20.7	-78.9	2183	6552	9.5	-12.0	820.1	-3529.1	1049.9	244.3	71.3
8TH	114.00	19.2	-69.4	1903	6552	10.1	-10.6	799.4	-3450.1	1004.5	233.8	70.0
9TH	127.00	10.0	-33.4	909	3528	11.1	-9.5	780.2	-3380.8	960.1	223.5	69.5
DUMY	134.00	8.5	-31.3	744	1512	11.4	-20.7	770.2	-3347.4	936.6	218.1	69.5
10TH	140.00	18.0	-69.6	1612	3276	11.2	-21.2	761.6	-3316.1	916.6	213.5	69.3
11TH	153.00	17.4	-72.0	1612	3276	10.8	-22.0	743.6	-3246.5	873.9	203.7	68.8
12TH	166.00	16.7	-73.2	1612	3276	10.4	-22.4	726.3	-3174.5	832.2	194.2	68.4
13TH	179.00	16.1	-74.5	1612	3276	10.0	-22.7	709.6	-3101.2	791.4	184.8	68.0
14TH	192.00	15.5	-75.7	1612	3276	9.6	-23.1	693.5	-3026.8	751.6	175.7	67.6
15TH	205.00	15.0	-76.9	1612	3276	9.3	-23.5	678.0	-2951.1	712.7	166.8	67.3
16TH	218.00	14.9	-78.1	1612	3276	9.3	-23.9	663.0	-2874.2	674.8	158.1	67.1
17TH	231.00	14.9	-79.4	1612	3276	9.2	-24.2	648.0	-2796.0	638.0	149.6	66.9
18TH	244.00	14.9	-80.6	1612	3276	9.2	-24.6	633.1	-2716.7	602.2	141.2	66.8
19TH	257.00	14.9	-81.8	1612	3276	9.2	-25.0	618.3	-2636.1	567.4	133.1	66.7
20TH	270.00	15.3	-82.1	1612	3276	9.5	-25.1	603.4	-2554.3	533.6	125.2	66.7
21ST	283.00	15.8	-82.2	1612	3276	9.8	-25.1	588.1	-2472.2	501.0	117.4	66.6
22ND	296.00	16.8	-82.5	1612	3276	10.4	-25.2	572.3	-2390.0	469.4	109.9	66.4
23RD	309.00	17.1	-82.9	1612	3276	10.6	-25.3	555.6	-2307.5	438.8	102.5	66.1
24TH	322.00	17.6	-82.3	1612	3276	10.9	-25.1	538.4	-2224.5	409.4	95.4	65.7
25TH	335.00	18.0	-81.2	1612	3276	11.2	-24.8	520.9	-2142.2	381.0	88.5	65.1
26TH	348.00	18.3	-82.4	1612	3276	11.3	-25.2	502.8	-2061.0	353.7	81.9	64.2
27TH	361.00	19.3	-83.1	1612	3276	12.0	-25.4	484.5	-1978.6	327.4	75.5	63.3
28TH	374.00	21.2	-81.1	1612	3276	13.1	-24.8	465.3	-1895.6	302.2	69.3	62.2
29TH	387.00	19.3	-80.0	1612	3276	12.0	-24.4	444.1	-1814.4	278.1	63.4	60.9
30TH	400.00	19.4	-81.1	1612	3276	12.0	-24.8	424.7	-1734.4	255.0	57.7	59.2
31ST	413.00	19.7	-83.5	1612	3276	12.2	-25.5	405.3	-1653.4	233.0	52.3	57.6
32ND	426.00	19.9	-82.2	1612	2635	12.4	-31.2	385.6	-1569.9	212.1	47.2	56.2
33RD	439.00	20.2	-82.8	1612	2635	12.5	-31.4	365.7	-1487.7	192.2	42.3	54.4
34TH	452.00	20.4	-83.4	1612	2635	12.7	-31.7	345.5	-1404.9	173.4	37.7	52.6
35TH	465.00	20.7	-82.5	1612	2635	12.8	-31.8	325.1	-1321.5	155.7	33.3	50.8
36TH	478.00	21.0	-80.9	1612	2635	13.0	-30.7	304.4	-1239.0	139.0	29.2	48.9
37TH	491.00	21.5	-79.4	1612	2635	13.3	-30.2	283.4	-1158.1	123.4	25.4	47.0
38TH	504.00	21.5	-78.0	1612	2635	13.3	-29.6	261.9	-1078.7	108.9	21.9	45.1
39TH	517.00	21.1	-79.1	1612	2635	13.1	-30.0	240.4	-1000.7	95.4	18.6	43.3
40TH	530.00	20.7	-80.8	1612	2635	12.8	-30.7	219.3	-921.6	82.9	15.6	41.4
41ST	543.00	20.4	-82.5	1612	2635	12.6	-31.3	198.7	-840.8	71.4	12.9	39.7
42ND	556.00	22.4	-81.6	1612	2635	13.9	-31.0	178.3	-758.3	61.0	10.5	38.1
43RD	569.00	24.4	-72.7	1612	2635	15.1	-27.6	155.9	-676.7	51.7	8.3	36.5
44TH	582.00	22.3	-63.5	1612	2635	13.8	-24.1	131.5	-604.0	43.4	6.4	34.6
45TH	595.00	22.8	-53.3	1612	2635	14.2	-20.2	109.3	-540.5	35.9	4.9	32.2
46TH	608.00	20.6	-61.2	1542	2635	13.3	-23.2	86.4	-487.2	29.3	3.6	29.2
47TH	621.00	16.9	-51.1	1402	1465	12.0	-34.9	65.8	-426.0	23.3	2.6	26.7
48TH	634.00	12.6	-51.3	1263	1465	10.0	-35.0	49.0	-374.8	18.1	1.8	23.7

TABLE 7. SHEAR AND MOMENT DIAGRAMS : HOUSTON NATIONAL BANK
WIND DIRECTION 280 CONFIGURATION A REFERENCE PRESSURE 30.0 PSF GUST FACTOR 1.32

FLOOR	HEIGHT FT	X-FORCE KIPS	Y-FORCE KIPS	X-AREA SQ FT	Y-AREA SQ FT	X-PRESS PSF	Y-PRESS PSF	X-SHEAR KIPS	Y-SHEAR KIPS	X-MOMENT	Y-MOMENT	Z-MOMENT
										1000-FT-KIPS		
49TH	647.00	9.7	-51.5	1123	1465	8.6	-35.1	36.3	-323.6	13.6	1.3	20.6
50TH	660.00	7.6	-51.8	983	1465	7.7	-35.4	26.7	-272.1	9.7	.9	17.4
51ST	673.00	5.3	-52.2	844	1465	6.2	-35.7	19.0	-220.3	6.5	.6	14.2
52ND	686.00	2.8	-52.6	704	1465	4.0	-35.9	13.8	-168.0	4.0	.4	10.9
53RD	699.00	6.4	-51.0	564	1465	11.4	-34.8	10.9	-115.5	2.1	.2	7.5
54TH	712.00	1.1	-40.2	424	1465	2.6	-27.5	4.5	-64.5	1.0	.1	4.3
55TH	725.00	3.4	-24.3	450	3718	7.6	-6.5	3.4	-24.3	.4	.1	1.6

TABLE 7. SHEAR AND MOMENT DIAGRAMS : HOUSTON NATIONAL BANK
WIND DIRECTION 290 CONFIGURATION A REFERENCE PRESSURE 30.0 PSF GUST FACTOR 1.32

FLOOR	HEIGHT FT	X-FORCE KIPS	Y-FORCE KIPS	X-AREA SQ FT	Y-AREA SQ FT	X-PRESS PSF	Y-PRESS PSF	X-SHEAR KIPS	Y-SHEAR KIPS	X-MOMENT	Y-MOMENT 1000-FT-KIPS	Z-MOMENT
GRND	0.00	24.5	-56.6	3024	3024	8.1	-18.7	568.9	-4414.5	1516.3	118.8	89.3
BASE	12.00	15.8	-29.0	1512	1512	10.5	-19.2	544.4	-4357.9	1463.7	112.1	88.8
MEZZ	18.00	60.8	-89.6	4536	4536	13.4	-19.8	528.6	-4328.9	1437.6	108.9	87.9
2ND	36.00	33.2	-54.4	3276	6552	10.1	-8.3	467.8	-4239.3	1360.5	100.0	83.1
3RD	49.00	7.1	-14.4	696	1512	10.3	-9.5	434.6	-4184.9	1305.8	94.1	80.8
SILL	52.00	23.6	-53.2	2320	5040	10.2	-10.6	427.4	-4170.5	1293.2	92.8	80.2
4TH	62.00	30.0	-84.4	3016	6552	9.9	-12.9	403.9	-4117.3	1251.8	88.6	78.1
5TH	75.00	28.5	-105.3	3016	6552	9.5	-16.1	373.9	-4032.9	1198.8	83.6	75.1
6TH	88.00	10.5	-38.8	1160	2520	9.1	-15.4	345.4	-3927.5	1147.1	78.9	72.8
DUMY	93.00	13.9	-58.8	1483	4032	9.4	-14.6	334.8	-3888.7	1127.5	77.2	72.1
7TH	101.00	19.7	-88.6	2183	6552	9.0	-13.5	321.0	-3829.9	1096.7	74.6	71.1
8TH	114.00	17.2	-81.9	1903	6552	9.0	-12.5	301.3	-3741.3	1047.4	70.5	70.0
9TH	127.00	8.6	-41.4	909	3528	9.4	-11.7	284.1	-3659.4	999.3	66.7	69.7
DUMY	134.00	7.0	-37.5	744	1512	9.5	-24.8	275.5	-3618.0	973.9	64.8	69.8
10TH	140.00	14.2	-83.0	1612	3276	8.8	-25.3	268.4	-3580.6	952.3	63.1	69.7
11TH	153.00	12.7	-85.5	1612	3276	7.9	-26.1	254.2	-3497.6	906.3	59.7	69.6
12TH	166.00	11.3	-87.0	1612	3276	7.0	-26.6	241.5	-3412.1	861.4	56.5	69.4
13TH	179.00	9.8	-88.6	1612	3276	6.1	-27.0	230.2	-3325.1	817.6	53.5	69.3
14TH	192.00	8.4	-90.1	1612	3276	5.2	-27.5	220.4	-3236.5	774.9	50.5	69.2
15TH	205.00	7.1	-91.6	1612	3276	4.4	-28.0	212.0	-3146.4	733.4	47.7	69.0
16TH	218.00	6.6	-93.2	1612	3276	4.1	-28.4	204.8	-3054.8	693.1	45.0	68.9
17TH	231.00	6.1	-94.7	1612	3276	3.8	-28.9	198.2	-2961.6	654.0	42.4	68.8
18TH	244.00	5.6	-96.3	1612	3276	3.5	-29.4	192.1	-2866.9	616.1	39.9	68.7
19TH	257.00	5.2	-97.8	1612	3276	3.2	-29.9	186.4	-2770.7	579.5	37.4	68.6
20TH	270.00	5.0	-96.9	1612	3276	3.1	-29.6	181.3	-2672.9	544.1	35.0	68.5
21ST	283.00	4.8	-95.4	1612	3276	3.0	-29.1	176.3	-2575.9	510.0	32.7	68.3
22ND	296.00	4.8	-94.2	1612	3276	3.0	-28.8	171.5	-2480.5	477.1	30.4	68.0
23RD	309.00	5.1	-93.1	1612	3276	3.2	-28.4	166.7	-2386.3	445.5	28.2	67.6
24TH	322.00	5.7	-91.5	1612	3276	3.5	-27.9	161.6	-2293.2	415.1	26.1	67.1
25TH	335.00	6.3	-89.8	1612	3276	3.9	-27.4	155.9	-2201.7	385.8	24.0	66.5
26TH	348.00	6.4	-90.1	1612	3276	4.0	-27.5	149.7	-2111.9	357.8	22.0	65.8
27TH	361.00	6.3	-89.9	1612	3276	3.9	-27.4	143.3	-2021.8	330.9	20.1	65.1
28TH	374.00	8.9	-87.0	1612	3276	5.5	-26.5	137.0	-1931.9	305.2	18.3	64.4
29TH	387.00	9.4	-84.7	1612	3276	5.8	-25.9	128.1	-1844.9	280.7	16.6	63.3
30TH	400.00	7.3	-84.3	1612	3276	4.5	-25.7	118.7	-1760.2	257.3	15.0	61.8
31ST	413.00	6.9	-86.1	1612	3276	4.3	-26.3	111.4	-1675.9	234.9	13.5	60.2
32ND	426.00	6.8	-84.5	1612	2635	4.2	-32.1	104.5	-1589.8	213.7	12.1	58.6
33RD	439.00	6.6	-84.7	1612	2635	4.1	-32.2	97.7	-1505.3	193.6	10.8	56.9
34TH	452.00	6.4	-84.9	1612	2635	4.0	-32.2	91.0	-1420.6	174.6	9.5	55.0
35TH	465.00	5.7	-83.9	1612	2635	3.6	-31.8	84.6	-1335.6	156.6	8.4	53.1
36TH	478.00	5.1	-82.3	1612	2635	3.1	-31.2	78.9	-1251.7	139.8	7.3	51.1
37TH	491.00	4.5	-80.8	1612	2635	2.8	-30.7	73.8	-1169.4	124.1	6.3	49.1
38TH	504.00	4.4	-79.2	1612	2635	2.8	-30.1	69.3	-1088.7	109.4	5.4	47.1
39TH	517.00	3.7	-79.8	1612	2635	2.3	-30.3	64.9	-1009.5	95.8	4.5	45.0
40TH	530.00	2.9	-81.1	1612	2635	1.8	-30.8	61.2	-929.7	83.2	3.7	43.0
41ST	543.00	2.9	-83.0	1612	2635	1.8	-31.5	58.3	-848.6	71.6	2.9	41.1
42ND	556.00	8.0	-82.3	1612	2635	5.0	-31.2	55.4	-765.6	61.1	2.2	39.2
43RD	569.00	9.8	-73.5	1612	2635	6.1	-27.9	47.4	-683.3	51.7	1.5	37.4
44TH	582.00	7.0	-64.2	1612	2635	4.3	-24.4	37.6	-609.9	43.3	1.0	35.2
45TH	595.00	8.1	-53.4	1612	2635	5.0	-20.3	30.6	-545.7	35.8	.5	32.6
46TH	608.00	8.0	-63.0	1542	2635	5.2	-23.9	22.5	-492.3	29.0	.2	29.3
47TH	621.00	7.2	-53.3	1402	1465	5.1	-36.4	14.5	-429.2	23.0	-.0	26.4
48TH	634.00	6.0	-53.3	1263	1465	4.8	-36.4	7.3	-376.0	17.8	-.2	23.1

TABLE 7. SHEAR AND MOMENT DIAGRAMS : HOUSTON NATIONAL BANK
WIND DIRECTION 290 CONFIGURATION A REFERENCE PRESSURE 30.0 PSF GUST FACTOR 1.32

FLOOR	HEIGHT FT	X-FORCE KIPS	Y-FORCE KIPS	X-AREA SQ FT	Y-AREA SQ FT	X-PRESS PSF	Y-PRESS PSF	X-SHEAR KIPS	Y-SHEAR KIPS	X-MOMENT	Y-MOMENT	Z-MOMENT
										1000-FT-KIPS		
49TH	647.00	4.5	-53.2	1123	1465	4.0	-36.3	1.3	-322.7	13.3	-.2	19.9
50TH	660.00	2.3	-53.0	983	1465	2.3	-36.2	-3.2	-269.5	9.4	-.2	16.6
51ST	673.00	.1	-52.8	844	1465	.1	-36.0	-5.6	-216.4	6.3	-.2	13.4
52ND	686.00	-2.0	-52.7	704	1465	-2.8	-36.0	-5.6	-163.6	3.8	-.1	10.1
53RD	699.00	-.5	-50.6	564	1465	-.9	-34.6	-3.7	-111.0	2.0	-.0	6.8
54TH	712.00	-4.3	-38.5	424	1465	-10.1	-26.3	-3.2	-60.3	.9	.0	3.8
55TH	725.00	1.1	-21.8	450	3718	2.4	-5.9	1.1	-21.8	.4	.0	1.4

TABLE 7. SHEAR AND MOMENT DIAGRAMS : HOUSTON NATIONAL BANK
WIND DIRECTION 300 CONFIGURATION A REFERENCE PRESSURE 30.0 PSF GUST FACTOR 1.32

FLOOR	HEIGHT FT	X-FORCE KIPS	Y-FORCE KIPS	X-AREA SQ FT	Y-AREA SQ FT	X-PRESS PSF	Y-PRESS PSF	X-SHEAR KIPS	Y-SHEAR KIPS	X-MOMENT 1000-FT-KIPS	Y-MOMENT 1000-FT-KIPS	Z-MOMENT 1000-FT-KIPS
GRND	0.00	8.9	-54.7	3024	3024	2.9	-18.1	-136.6	-4573.2	1615.5	-176.0	82.4
BASE	12.00	8.4	-27.8	1512	1512	5.5	-18.4	-145.4	-4518.5	1561.0	-174.3	83.0
MEZZ	18.00	40.0	-85.1	4536	4536	8.8	-18.8	-153.8	-4490.8	1533.9	-173.4	82.7
2ND	36.00	21.1	-55.9	3276	6552	6.5	-8.5	-193.8	-4405.7	1453.9	-170.2	79.6
3RD	49.00	4.7	-14.3	696	1512	6.7	-9.5	-214.9	-4349.7	1397.0	-167.6	78.7
SILL	52.00	15.5	-51.7	2320	5040	6.7	-10.3	-219.6	-4335.4	1383.9	-166.9	78.4
4TH	62.00	20.1	-81.0	3016	6552	6.7	-12.4	-235.1	-4283.7	1340.8	-164.7	77.3
5TH	75.00	20.1	-103.7	3016	6552	6.7	-15.8	-255.2	-4202.6	1285.7	-161.5	75.6
6TH	88.00	7.7	-38.3	1160	2520	6.7	-15.2	-275.3	-4099.0	1231.7	-158.0	74.6
DUMY	93.00	11.5	-57.6	1483	4032	7.8	-14.3	-283.0	-4060.7	1211.3	-156.6	74.2
7TH	101.00	17.8	-86.5	2183	6552	8.2	-13.2	-294.5	-4003.1	1179.1	-154.3	73.6
8TH	114.00	16.9	-82.1	1903	6552	8.9	-12.5	-312.4	-3916.7	1127.6	-150.4	72.7
9TH	127.00	8.8	-42.4	909	3528	9.7	-12.0	-329.2	-3834.6	1077.2	-146.2	72.7
DUMY	134.00	7.3	-37.6	744	1512	9.8	-24.9	-338.0	-3792.2	1050.5	-143.9	72.9
10TH	140.00	14.3	-83.1	1612	3276	8.8	-25.4	-345.3	-3754.6	1027.9	-141.8	72.9
11TH	153.00	12.2	-85.2	1612	3276	7.6	-26.0	-359.6	-3671.5	979.6	-137.2	72.9
12TH	166.00	10.2	-86.4	1612	3276	6.3	-26.4	-371.8	-3586.3	932.4	-132.5	72.9
13TH	179.00	8.2	-87.6	1612	3276	5.1	-26.7	-382.0	-3499.8	886.4	-127.6	72.8
14TH	192.00	6.2	-88.8	1612	3276	3.8	-27.1	-390.2	-3412.2	841.4	-122.6	72.7
15TH	205.00	4.3	-89.9	1612	3276	2.7	-27.4	-396.3	-3323.4	797.7	-117.5	72.6
16TH	218.00	3.2	-91.1	1612	3276	2.0	-27.8	-400.7	-3233.5	755.0	-112.3	72.5
17TH	231.00	2.1	-92.2	1612	3276	1.3	-28.2	-403.9	-3142.5	713.6	-107.0	72.3
18TH	244.00	1.0	-93.4	1612	3276	.6	-28.5	-406.0	-3050.2	673.3	-101.8	72.2
19TH	257.00	-.2	-94.5	1612	3276	-.1	-28.9	-407.0	-2956.8	634.3	-96.5	72.1
20TH	270.00	-1.8	-94.6	1612	3276	-1.1	-28.9	-406.9	-2862.3	596.5	-91.2	71.9
21ST	283.00	-3.4	-94.3	1612	3276	-2.1	-28.8	-405.1	-2767.7	559.9	-85.9	71.7
22ND	296.00	-5.8	-94.1	1612	3276	-3.6	-28.7	-401.7	-2673.4	524.5	-80.7	71.4
23RD	309.00	-6.9	-93.8	1612	3276	-4.3	-28.6	-395.8	-2579.3	490.4	-75.5	71.0
24TH	322.00	-8.1	-93.8	1612	3276	-5.0	-28.6	-388.9	-2485.5	457.5	-70.4	70.5
25TH	335.00	-9.3	-93.9	1612	3276	-5.8	-28.7	-380.8	-2391.7	425.7	-65.4	70.1
26TH	348.00	-10.1	-95.3	1612	3276	-6.3	-29.1	-371.5	-2297.8	395.3	-60.5	69.6
27TH	361.00	-8.2	-95.8	1612	3276	-5.1	-29.3	-361.3	-2202.4	366.0	-55.7	69.2
28TH	374.00	-7.8	-93.0	1612	3276	-4.8	-28.4	-353.1	-2106.6	338.0	-51.1	68.9
29TH	387.00	-7.6	-90.4	1612	3276	-4.7	-27.6	-345.4	-2013.6	311.2	-46.6	68.1
30TH	400.00	-13.0	-88.4	1612	3276	-8.0	-27.0	-337.8	-1923.3	285.6	-42.1	66.9
31ST	413.00	-14.2	-90.7	1612	3276	-8.8	-27.7	-324.8	-1834.8	261.2	-37.8	65.2
32ND	426.00	-15.0	-89.2	1612	2635	-9.3	-33.9	-310.6	-1744.2	237.9	-33.7	63.7
33RD	439.00	-15.7	-89.9	1612	2635	-9.8	-34.1	-295.7	-1655.0	215.9	-29.7	61.9
34TH	452.00	-16.7	-90.5	1612	2635	-10.4	-34.4	-279.9	-1565.1	194.9	-26.0	60.0
35TH	465.00	-18.9	-90.0	1612	2635	-11.7	-34.2	-263.2	-1474.6	175.2	-22.5	58.1
36TH	478.00	-21.2	-89.1	1612	2635	-13.1	-33.8	-244.3	-1384.6	156.6	-19.2	56.1
37TH	491.00	-23.6	-88.4	1612	2635	-14.6	-33.5	-223.1	-1295.5	139.2	-16.1	53.9
38TH	504.00	-23.7	-87.7	1612	2635	-14.7	-33.3	-199.6	-1207.1	122.9	-13.4	51.7
39TH	517.00	-24.1	-88.1	1612	2635	-15.0	-33.4	-175.8	-1119.5	107.8	-10.9	49.4
40TH	530.00	-24.5	-88.8	1612	2635	-15.2	-33.7	-151.7	-1031.4	93.8	-8.8	47.1
41ST	543.00	-23.7	-89.9	1612	2635	-14.7	-34.1	-127.2	-942.6	81.0	-7.0	44.9
42ND	556.00	-15.3	-88.6	1612	2635	-9.5	-33.6	-103.5	-852.6	69.3	-5.5	42.7
43RD	569.00	-13.0	-79.5	1612	2635	-8.0	-30.2	-88.2	-764.1	58.8	-4.3	40.8
44TH	582.00	-13.1	-69.7	1612	2635	-8.1	-26.4	-75.2	-684.5	49.4	-3.2	38.4
45TH	595.00	-15.8	-56.7	1612	2635	-9.8	-21.5	-62.2	-614.9	40.9	-2.3	35.5
46TH	608.00	-14.1	-70.5	1542	2635	-9.1	-26.8	-46.4	-558.2	33.3	-1.6	31.9
47TH	621.00	-11.2	-57.2	1402	1465	-8.0	-39.1	-32.3	-487.7	26.5	-1.1	28.9
48TH	634.00	-7.3	-58.4	1263	1465	-5.8	-39.9	-21.1	-430.5	20.5	-.7	25.2

TABLE 7. SHEAR AND MOMENT DIAGRAMS : HOUSTON NATIONAL BANK
WIND DIRECTION 300 CONFIGURATION A REFERENCE PRESSURE 30.0 PSF GUST FACTOR 1.32

FLOOR	HEIGHT FT	X-FORCE KIPS	Y-FORCE KIPS	X-AREA SQ FT	Y-AREA SQ FT	X-PRESS PSF	Y-PRESS PSF	X-SHEAR KIPS	Y-SHEAR KIPS	X-MOMENT	Y-MOMENT	Z-MOMENT
										1000-FT-KIPS		
49TH	647.00	-4.3	-59.6	1123	1465	-3.8	-40.7	-13.8	-372.1	15.3	-.5	21.6
50TH	660.00	-2.3	-60.8	983	1465	-2.4	-41.5	-9.5	-312.5	10.9	-.4	18.1
51ST	673.00	-1.2	-61.9	844	1465	-1.4	-42.3	-7.2	-251.7	7.2	-.2	14.5
52ND	686.00	-.8	-62.3	704	1465	-1.2	-42.6	-6.0	-189.8	4.3	-.2	10.9
53RD	699.00	-.9	-59.5	564	1465	-1.6	-40.6	-5.1	-127.5	2.3	-.1	7.3
54TH	712.00	-4.0	-44.1	424	1465	-9.5	-30.1	-4.2	-68.0	1.0	-.0	3.9
55TH	725.00	-.2	-23.9	450	3718	-.4	-6.4	-.2	-23.9	.4	-.0	1.4

TABLE 7. SHEAR AND MOMENT DIAGRAMS : HOUSTON NATIONAL BANK
WIND DIRECTION 310 CONFIGURATION A REFERENCE PRESSURE 30.0 PSF GUST FACTOR 1.32

FLOOR	HEIGHT FT	X-FORCE KIPS	Y-FORCE KIPS	X-AREA SQ FT	Y-AREA SQ FT	X-PRESS PSF	Y-PRESS PSF	X-SHEAR KIPS	Y-SHEAR KIPS	X-MOMENT 1000-FT-KIPS	Y-MOMENT 1000-FT-KIPS	Z-MOMENT 1000-FT-KIPS
GRND	0.00	-2.4	-60.3	3024	3024	-.8	-19.9	-467.3	-4723.1	1642.6	-230.2	38.7
BASE	12.00	-.0	-30.6	1512	1512	-.0	-20.2	-464.9	-4662.8	1586.3	-224.6	40.4
MEZZ	18.00	4.4	-93.4	4536	4536	1.0	-20.6	-464.9	-4632.2	1558.4	-221.8	41.1
2ND	36.00	-1.7	-64.0	3276	6552	-.5	-9.8	-469.3	-4538.8	1475.9	-213.4	42.0
3RD	49.00	.3	-16.3	696	1512	.4	-10.8	-467.5	-4474.8	1417.3	-207.3	44.0
SILL	52.00	2.0	-58.5	2320	5040	.9	-11.6	-467.8	-4458.5	1403.9	-205.9	44.2
4TH	62.00	3.9	-88.5	3016	6552	1.3	-13.5	-469.8	-4399.9	1359.6	-201.3	44.5
5TH	75.00	2.4	-106.2	3016	6552	.8	-16.2	-473.7	-4311.4	1303.0	-195.1	44.2
6TH	88.00	.5	-37.6	1160	2520	.4	-14.9	-476.1	-4205.2	1247.6	-188.9	44.3
DUMY	93.00	2.0	-54.9	1483	4032	1.4	-13.6	-476.6	-4167.6	1226.7	-186.6	44.6
7TH	101.00	3.6	-82.2	2183	6552	1.7	-12.5	-478.6	-4112.7	1193.6	-182.7	44.8
8TH	114.00	4.5	-84.8	1903	6552	2.4	-12.9	-482.2	-4030.6	1140.6	-176.5	45.2
9TH	127.00	3.0	-46.8	909	3528	3.3	-13.3	-486.8	-3945.8	1088.8	-170.2	45.8
DUMY	134.00	2.6	-39.2	744	1512	3.5	-25.9	-489.8	-3899.0	1061.3	-166.8	46.2
10TH	140.00	4.5	-86.5	1612	3276	2.8	-26.4	-492.4	-3859.8	1038.1	-163.8	46.5
11TH	153.00	2.9	-88.6	1612	3276	1.8	-27.0	-496.9	-3773.3	988.5	-157.4	47.0
12TH	166.00	1.3	-90.2	1612	3276	.8	-27.5	-499.8	-3684.7	940.0	-150.9	47.5
13TH	179.00	-.3	-91.7	1612	3276	-.2	-28.0	-501.1	-3594.6	892.7	-144.4	48.1
14TH	192.00	-1.9	-93.2	1612	3276	-1.2	-28.5	-500.8	-3502.9	846.5	-137.9	48.7
15TH	205.00	-3.2	-94.8	1612	3276	-2.0	-28.9	-498.9	-3409.6	801.6	-131.4	49.4
16TH	218.00	-3.9	-96.3	1612	3276	-2.4	-29.4	-495.7	-3314.9	757.9	-124.9	50.1
17TH	231.00	-4.5	-97.9	1612	3276	-2.8	-29.9	-491.8	-3218.6	715.4	-118.5	50.8
18TH	244.00	-5.2	-99.4	1612	3276	-3.2	-30.3	-487.3	-3120.7	674.2	-112.2	51.5
19TH	257.00	-5.9	-100.9	1612	3276	-3.6	-30.8	-482.1	-3021.3	634.3	-105.9	52.3
20TH	270.00	-7.8	-101.0	1612	3276	-4.9	-30.8	-476.2	-2920.4	595.7	-99.6	53.2
21ST	283.00	-9.8	-100.5	1612	3276	-6.1	-30.7	-468.4	-2819.3	558.4	-93.5	53.8
22ND	296.00	-12.3	-99.5	1612	3276	-7.6	-30.4	-458.6	-2718.8	522.4	-87.5	54.3
23RD	309.00	-12.8	-98.5	1612	3276	-8.0	-30.1	-446.3	-2619.3	487.7	-81.6	54.5
24TH	322.00	-14.3	-98.6	1612	3276	-8.9	-30.1	-433.5	-2520.8	454.3	-75.9	54.5
25TH	335.00	-15.7	-99.3	1612	3276	-9.8	-30.3	-419.2	-2422.2	422.1	-70.3	54.6
26TH	348.00	-16.0	-100.4	1612	3276	-9.9	-30.6	-403.5	-2322.9	391.3	-65.0	54.6
27TH	361.00	-9.3	-101.0	1612	3276	-5.8	-30.8	-387.5	-2222.6	361.7	-59.8	54.7
28TH	374.00	-9.3	-99.6	1612	3276	-5.8	-30.4	-378.2	-2121.5	333.5	-54.9	55.0
29TH	387.00	-12.1	-96.8	1612	3276	-7.5	-29.5	-368.9	-2022.0	306.6	-50.0	55.0
30TH	400.00	-15.5	-90.2	1612	3276	-9.6	-27.5	-356.8	-1925.2	280.9	-45.3	54.7
31ST	413.00	-15.6	-92.4	1612	3276	-9.7	-28.2	-341.3	-1835.0	256.5	-40.7	53.6
32ND	426.00	-15.4	-90.3	1612	2635	-9.5	-34.3	-325.7	-1742.5	233.2	-36.4	52.6
33RD	439.00	-15.2	-91.0	1612	2635	-9.4	-34.5	-310.3	-1652.2	211.1	-32.3	51.4
34TH	452.00	-15.2	-91.6	1612	2635	-9.4	-34.8	-295.1	-1561.2	190.3	-28.3	50.2
35TH	465.00	-16.7	-91.3	1612	2635	-10.4	-34.7	-279.9	-1469.6	170.6	-24.6	49.0
36TH	478.00	-18.3	-91.2	1612	2635	-11.3	-34.6	-263.2	-1378.3	152.0	-21.1	47.6
37TH	491.00	-20.2	-91.7	1612	2635	-12.6	-34.8	-244.9	-1287.0	134.7	-17.8	46.1
38TH	504.00	-21.1	-92.2	1612	2635	-13.1	-35.0	-224.7	-1195.3	118.6	-14.7	44.5
39TH	517.00	-23.9	-92.2	1612	2635	-14.8	-35.0	-203.6	-1103.1	103.6	-11.9	42.8
40TH	530.00	-26.7	-92.0	1612	2635	-16.6	-34.9	-179.7	-1010.9	89.9	-9.4	41.0
41ST	543.00	-27.3	-92.0	1612	2635	-16.9	-34.9	-153.0	-919.0	77.4	-7.3	39.2
42ND	556.00	-15.5	-89.9	1612	2635	-9.6	-34.1	-125.7	-827.0	66.0	-5.5	37.3
43RD	569.00	-14.8	-80.9	1612	2635	-9.2	-30.7	-110.2	-737.0	55.8	-3.9	35.8
44TH	582.00	-17.4	-70.6	1612	2635	-10.8	-26.8	-95.3	-656.1	46.8	-2.6	33.9
45TH	595.00	-26.0	-55.7	1612	2635	-16.1	-21.1	-77.9	-585.5	38.7	-1.5	31.4
46TH	608.00	-22.2	-71.0	1542	2635	-14.4	-26.9	-51.9	-529.8	31.5	-.6	27.9
47TH	621.00	-16.6	-54.6	1402	1465	-11.8	-37.2	-29.8	-458.8	25.0	-.1	25.3
48TH	634.00	-11.3	-54.5	1263	1465	-9.0	-37.2	-13.2	-404.3	19.4	.2	22.0

TABLE 7. SHEAR AND MOMENT DIAGRAMS : HOUSTON NATIONAL BANK
WIND DIRECTION 310 CONFIGURATION A REFERENCE PRESSURE 30.0 PSF GUST FACTOR 1.32

FLOOR	HEIGHT FT	X-FORCE KIPS	Y-FORCE KIPS	X-AREA SQ FT	Y-AREA SQ FT	X-PRESS PSF	Y-PRESS PSF	X-SHEAR KIPS	Y-SHEAR KIPS	X-MOMENT	Y-MOMENT	Z-MOMENT
										1000-FT-KIPS		
49TH	647.00	-6.7	-54.9	1123	1465	-6.0	-37.5	-1.9	-349.8	14.5	.3	18.9
50TH	660.00	-2.3	-56.3	983	1465	-2.3	-38.5	4.8	-294.9	10.3	.3	16.0
51ST	673.00	1.1	-57.8	844	1465	1.3	-39.5	7.1	-238.5	6.9	.2	13.0
52ND	686.00	3.4	-58.6	704	1465	4.8	-40.0	6.1	-180.7	4.2	.1	9.9
53RD	699.00	1.9	-56.4	564	1465	3.3	-38.5	2.7	-122.1	2.2	.0	6.8
54TH	712.00	.5	-42.3	424	1465	1.2	-28.9	.8	-65.7	1.0	.0	3.7
55TH	725.00	.3	-23.4	450	3718	.6	-6.3	.3	-23.4	.4	.0	1.3

TABLE 7. SHEAR AND MOMENT DIAGRAMS : HOUSTON NATIONAL BANK
WIND DIRECTION 320 CONFIGURATION A REFERENCE PRESSURE 30.0 PSF GUST FACTOR 1.32

FLOOR	HEIGHT FT	X-FORCE KIPS	Y-FORCE KIPS	X-AREA SQ FT	Y-AREA SQ FT	X-PRESS PSF	Y-PRESS PSF	X-SHEAR KIPS	Y-SHEAR KIPS	X-MOMENT	Y-MOMENT	Z-MOMENT
										1000-FT-KIPS		
GRND	0.00	7.6	-47.2	3024	3024	2.5	-15.6	-345.5	-4546.7	1613.6	-169.2	.1
BASE	12.00	2.5	-23.7	1512	1512	1.7	-15.7	-353.0	-4499.5	1559.3	-165.0	.8
MEZZ	18.00	2.4	-71.7	4536	4536	.5	-15.8	-355.6	-4475.8	1532.4	-162.9	1.3
2ND	36.00	-7.6	-49.6	3276	6552	-2.3	-7.6	-357.9	-4404.1	1452.5	-156.5	3.5
3RD	49.00	-.6	-12.7	696	1512	-.9	-8.4	-350.3	-4354.5	1395.6	-151.9	7.4
SILL	52.00	-.1	-45.5	2320	5040	-.0	-9.0	-349.7	-4341.8	1382.5	-150.8	8.0
4TH	62.00	3.7	-71.0	3016	6552	1.2	-10.8	-349.6	-4296.3	1339.3	-147.3	9.7
5TH	75.00	4.8	-86.7	3016	6552	1.6	-13.2	-353.3	-4225.4	1283.9	-142.7	11.3
6TH	88.00	2.1	-32.9	1160	2520	1.8	-13.1	-358.1	-4138.6	1229.6	-138.1	11.7
DUMY	93.00	1.9	-51.8	1483	4032	1.3	-12.8	-360.2	-4105.7	1209.0	-136.3	11.9
7TH	101.00	1.4	-81.2	2183	6552	.7	-12.4	-362.0	-4053.9	1176.3	-133.4	12.8
8TH	114.00	.8	-82.1	1903	6552	.4	-12.5	-363.5	-3972.7	1124.2	-128.7	14.6
9TH	127.00	.6	-44.6	909	3528	.7	-12.6	-364.3	-3890.6	1073.0	-124.0	16.0
DUMY	134.00	.5	-37.7	744	1512	.7	-24.9	-364.9	-3846.0	1046.0	-121.4	16.5
10TH	140.00	.4	-82.6	1612	3276	.3	-25.2	-365.5	-3808.3	1023.0	-119.2	17.1
11TH	153.00	-.5	-83.9	1612	3276	-.3	-25.6	-365.9	-3725.7	974.0	-114.5	18.4
12TH	166.00	-1.5	-85.7	1612	3276	-.9	-26.2	-365.3	-3641.8	926.1	-109.7	19.8
13TH	179.00	-2.5	-87.6	1612	3276	-1.5	-26.7	-363.8	-3556.1	879.4	-105.0	21.2
14TH	192.00	-3.5	-89.4	1612	3276	-2.1	-27.3	-361.3	-3468.5	833.7	-100.3	22.7
15TH	205.00	-4.1	-91.2	1612	3276	-2.5	-27.8	-357.9	-3379.1	789.2	-95.6	24.2
16TH	218.00	-3.5	-93.1	1612	3276	-2.2	-28.4	-353.8	-3287.9	745.9	-91.0	25.7
17TH	231.00	-2.9	-94.9	1612	3276	-1.8	-29.0	-350.3	-3194.8	703.7	-86.4	27.3
18TH	244.00	-2.3	-96.7	1612	3276	-1.4	-29.5	-347.5	-3099.9	662.8	-81.9	29.0
19TH	257.00	-1.8	-98.6	1612	3276	-1.1	-30.1	-345.2	-3003.2	623.1	-77.4	30.7
20TH	270.00	-3.3	-99.2	1612	3276	-2.0	-30.3	-343.3	-2904.6	584.7	-72.9	32.5
21ST	283.00	-4.7	-99.4	1612	3276	-2.9	-30.4	-340.0	-2805.4	547.6	-68.4	34.1
22ND	296.00	-6.2	-99.6	1612	3276	-3.8	-30.4	-335.3	-2706.0	511.8	-64.1	35.5
23RD	309.00	-7.1	-99.7	1612	3276	-4.4	-30.4	-329.1	-2606.4	477.3	-59.7	36.7
24TH	322.00	-10.7	-100.5	1612	3276	-6.7	-30.7	-322.0	-2506.7	444.0	-55.5	37.8
25TH	335.00	-14.4	-101.5	1612	3276	-8.9	-31.0	-311.3	-2406.2	412.1	-51.4	38.9
26TH	348.00	-15.9	-102.9	1612	3276	-9.8	-31.4	-296.9	-2304.7	381.5	-47.4	39.9
27TH	361.00	-4.5	-103.8	1612	3276	-2.8	-31.7	-281.0	-2201.8	352.2	-43.7	41.0
28TH	374.00	-4.0	-102.9	1612	3276	-2.5	-31.4	-276.5	-2098.0	324.2	-40.1	42.4
29TH	387.00	-7.0	-99.8	1612	3276	-4.3	-30.5	-272.5	-1995.1	297.6	-36.5	43.6
30TH	400.00	-14.5	-90.2	1612	3276	-9.0	-27.5	-265.5	-1895.3	272.3	-33.0	44.3
31ST	413.00	-14.3	-92.6	1612	3276	-8.9	-28.3	-251.0	-1805.1	248.3	-29.6	43.8
32ND	426.00	-13.3	-90.0	1612	2635	-8.3	-34.1	-236.7	-1712.5	225.4	-26.5	43.4
33RD	439.00	-12.4	-90.7	1612	2635	-7.7	-34.4	-223.3	-1622.5	203.7	-23.5	42.7
34TH	452.00	-11.6	-91.5	1612	2635	-7.2	-34.7	-211.0	-1531.8	183.2	-20.7	42.0
35TH	465.00	-11.9	-92.1	1612	2635	-7.4	-35.0	-199.4	-1440.4	163.9	-18.0	41.2
36TH	478.00	-12.3	-92.3	1612	2635	-7.6	-35.0	-187.5	-1348.2	145.8	-15.5	40.4
37TH	491.00	-13.1	-91.8	1612	2635	-8.1	-34.8	-175.2	-1255.9	128.9	-13.1	39.3
38TH	504.00	-13.7	-91.2	1612	2635	-8.5	-34.6	-162.1	-1164.1	113.1	-10.9	38.1
39TH	517.00	-17.2	-91.2	1612	2635	-10.7	-34.6	-148.4	-1072.9	98.6	-8.9	36.8
40TH	530.00	-20.8	-91.4	1612	2635	-12.9	-34.7	-131.2	-981.7	85.2	-7.1	35.3
41ST	543.00	-21.4	-91.9	1612	2635	-13.3	-34.9	-110.4	-890.3	73.1	-5.5	33.8
42ND	556.00	-6.1	-90.3	1612	2635	-3.8	-34.3	-89.1	-798.4	62.1	-4.2	32.3
43RD	569.00	-5.3	-81.6	1612	2635	-3.3	-31.0	-83.0	-708.1	52.3	-3.1	31.4
44TH	582.00	-7.5	-70.9	1612	2635	-4.6	-26.9	-77.7	-626.5	43.6	-2.1	30.1
45TH	595.00	-23.4	-53.2	1612	2635	-14.5	-20.2	-70.2	-555.6	35.9	-1.1	28.3
46TH	608.00	-20.4	-71.4	1542	2635	-13.2	-27.1	-46.8	-502.3	29.1	-.3	25.2
47TH	621.00	-15.0	-53.3	1402	1465	-10.7	-36.4	-26.5	-431.0	23.0	.1	23.0
48TH	634.00	-10.7	-53.4	1263	1465	-8.5	-36.5	-11.5	-377.7	17.7	.4	20.0

TABLE 7. SHEAR AND MOMENT DIAGRAMS : HOUSTON NATIONAL BANK
WIND DIRECTION 320 CONFIGURATION A REFERENCE PRESSURE 30.0 PSF GUST FACTOR 1.32

FLOOR	HEIGHT FT	X-FORCE KIPS	Y-FORCE KIPS	X-AREA SQ FT	Y-AREA SQ FT	X-PRESS PSF	Y-PRESS PSF	X-SHEAR KIPS	Y-SHEAR KIPS	X-MOMENT	Y-MOMENT	Z-MOMENT
										1000-FT-KIPS		
49TH	647.00	-6.7	-53.6	1123	1465	-6.0	-36.6	-.8	-324.3	13.2	.5	17.0
50TH	660.00	-2.5	-53.8	983	1465	-2.6	-36.7	5.9	-270.7	9.3	.4	14.2
51ST	673.00	.8	-54.0	844	1465	1.0	-36.9	8.5	-216.9	6.1	.3	11.4
52ND	686.00	3.3	-54.0	704	1465	4.7	-36.9	7.7	-162.9	3.7	.2	8.6
53RD	699.00	.7	-51.6	564	1465	1.2	-35.2	4.4	-108.9	1.9	.2	5.8
54TH	712.00	.0	-37.6	424	1465	.0	-25.7	3.7	-57.3	.8	.1	3.1
55TH	725.00	3.7	-19.7	450	3718	8.2	-5.3	3.7	-19.7	.3	.1	1.1

TABLE 7. SHEAR AND MOMENT DIAGRAMS : HOUSTON NATIONAL BANK
WIND DIRECTION 330 CONFIGURATION A REFERENCE PRESSURE 30.0 PSF GUST FACTOR 1.32

FLOOR	HEIGHT FT	X-FORCE KIPS	Y-FORCE KIPS	X-AREA SQ FT	Y-AREA SQ FT	X-PRESS PSF	Y-PRESS PSF	X-SHEAR KIPS	Y-SHEAR KIPS	X-MOMENT 1000-FT-KIPS	Y-MOMENT 1000-FT-KIPS	Z-MOMENT 1000-FT-KIPS
GRND	0.00	-1.0	-23.8	3024	3024	-.3	-7.9	-614.8	-4351.4	1581.0	-239.4	-25.9
BASE	12.00	-1.3	-12.8	1512	1512	-.9	-8.5	-613.8	-4327.6	1529.0	-232.0	-25.4
MEZZ	18.00	-7.0	-42.0	4536	4536	-1.6	-9.3	-612.5	-4314.8	1503.0	-228.3	-25.0
2ND	36.00	-5.0	-35.0	3276	6552	-1.5	-5.3	-605.4	-4272.8	1425.8	-217.4	-23.3
3RD	49.00	-1.0	-9.3	696	1512	-1.5	-6.2	-600.5	-4237.8	1370.4	-209.5	-21.7
SILL	52.00	-3.3	-34.5	2320	5040	-1.4	-6.8	-599.4	-4228.5	1357.7	-207.7	-21.4
4TH	62.00	-4.0	-57.9	3016	6552	-1.3	-8.8	-596.1	-4194.0	1315.6	-201.8	-20.2
5TH	75.00	-3.8	-68.2	3016	6552	-1.3	-10.4	-592.2	-4136.1	1261.5	-194.0	-18.3
6TH	88.00	-1.4	-27.3	1160	2520	-1.2	-10.8	-588.4	-4067.9	1208.2	-186.4	-17.0
DUMY	93.00	-3.3	-46.2	1483	4032	-2.2	-11.4	-586.9	-4040.6	1187.9	-183.4	-16.4
7TH	101.00	-6.6	-77.5	2183	6552	-3.0	-11.8	-583.6	-3994.5	1155.7	-178.7	-15.0
8TH	114.00	-6.7	-79.0	1903	6552	-3.5	-12.1	-577.0	-3917.0	1104.3	-171.2	-12.3
9TH	127.00	-3.4	-43.1	909	3528	-3.7	-12.2	-570.3	-3838.0	1053.9	-163.7	-10.0
DUMY	134.00	-2.9	-36.6	744	1512	-3.9	-24.2	-566.9	-3794.9	1027.2	-159.8	-8.9
10TH	140.00	-7.3	-80.8	1612	3276	-4.5	-24.7	-564.0	-3758.2	1004.5	-156.4	-7.8
11TH	153.00	-8.7	-82.9	1612	3276	-5.4	-25.3	-556.7	-3677.4	956.2	-149.1	-5.3
12TH	166.00	-10.1	-84.7	1612	3276	-6.2	-25.8	-548.0	-3594.6	908.9	-141.9	-2.7
13TH	179.00	-11.4	-86.5	1612	3276	-7.1	-26.4	-537.9	-3509.9	862.8	-134.8	-.1
14TH	192.00	-12.8	-88.3	1612	3276	-7.9	-26.9	-526.4	-3423.4	817.7	-127.9	2.5
15TH	205.00	-13.9	-90.1	1612	3276	-8.6	-27.5	-513.6	-3335.1	773.8	-121.2	5.2
16TH	218.00	-14.1	-91.9	1612	3276	-8.7	-28.1	-499.7	-3245.0	731.0	-114.6	7.8
17TH	231.00	-14.2	-93.7	1612	3276	-8.8	-28.6	-485.7	-3153.1	689.4	-108.2	10.5
18TH	244.00	-14.4	-95.5	1612	3276	-8.9	-29.2	-471.5	-3059.4	649.0	-101.9	13.1
19TH	257.00	-14.5	-97.3	1612	3276	-9.0	-29.7	-457.1	-2963.9	609.9	-95.9	15.7
20TH	270.00	-14.7	-98.3	1612	3276	-9.1	-30.0	-442.6	-2866.6	572.0	-90.1	18.3
21ST	283.00	-14.8	-99.0	1612	3276	-9.2	-30.2	-427.9	-2768.3	535.3	-84.4	20.7
22ND	296.00	-15.1	-99.3	1612	3276	-9.3	-30.3	-413.1	-2669.3	500.0	-78.9	22.9
23RD	309.00	-14.6	-99.7	1612	3276	-9.0	-30.4	-398.0	-2570.0	465.9	-73.7	24.8
24TH	322.00	-16.6	-100.8	1612	3276	-10.3	-30.8	-383.5	-2470.3	433.2	-68.6	26.6
25TH	335.00	-18.7	-102.1	1612	3276	-11.6	-31.2	-366.8	-2369.5	401.7	-63.7	28.3
26TH	348.00	-18.5	-103.8	1612	3276	-11.5	-31.7	-348.1	-2267.3	371.6	-59.1	29.9
27TH	361.00	-5.5	-104.7	1612	3276	-3.4	-32.0	-329.6	-2163.5	342.8	-54.7	31.5
28TH	374.00	-2.8	-103.3	1612	3276	-1.7	-31.5	-324.1	-2058.8	315.3	-50.4	33.5
29TH	387.00	-.4	-99.8	1612	3276	-.3	-30.5	-321.4	-1955.5	289.2	-46.2	35.3
30TH	400.00	-17.4	-90.2	1612	3276	-10.8	-27.5	-320.9	-1855.7	264.5	-42.0	36.5
31ST	413.00	-18.4	-93.1	1612	3276	-11.4	-28.4	-303.6	-1765.5	240.9	-38.0	36.3
32ND	426.00	-17.6	-90.1	1612	2635	-10.9	-34.2	-285.2	-1672.4	218.6	-34.2	36.2
33RD	439.00	-16.9	-90.9	1612	2635	-10.5	-34.5	-267.5	-1582.3	197.4	-30.6	35.8
34TH	452.00	-16.2	-91.8	1612	2635	-10.1	-34.8	-250.7	-1491.4	177.4	-27.2	35.4
35TH	465.00	-16.3	-92.1	1612	2635	-10.1	-34.9	-234.4	-1399.7	158.7	-24.0	35.1
36TH	478.00	-16.3	-91.8	1612	2635	-10.1	-34.8	-218.2	-1307.6	141.1	-21.1	34.6
37TH	491.00	-15.9	-91.0	1612	2635	-9.9	-34.6	-201.8	-1215.9	124.7	-18.4	34.1
38TH	504.00	-16.1	-90.3	1612	2635	-10.0	-34.3	-185.9	-1124.8	109.4	-15.8	33.3
39TH	517.00	-18.5	-89.4	1612	2635	-11.4	-33.9	-169.9	-1034.5	95.4	-13.5	32.5
40TH	530.00	-20.8	-88.6	1612	2635	-12.9	-33.6	-151.4	-945.0	82.5	-11.4	31.6
41ST	543.00	-20.3	-88.4	1612	2635	-12.6	-33.6	-130.6	-856.4	70.8	-9.6	30.5
42ND	556.00	-3.3	-86.5	1612	2635	-2.1	-32.8	-110.3	-768.0	60.3	-8.0	29.4
43RD	569.00	.0	-78.6	1612	2635	.0	-29.8	-106.9	-681.6	50.8	-6.6	28.8
44TH	582.00	2.1	-68.3	1612	2635	1.3	-25.9	-106.9	-603.0	42.5	-5.2	27.9
45TH	595.00	-23.4	-49.3	1612	2635	-14.5	-18.7	-109.0	-534.7	35.1	-3.8	26.5
46TH	608.00	-22.9	-69.4	1542	2635	-14.8	-26.3	-85.6	-485.4	28.5	-2.6	23.6
47TH	621.00	-18.5	-49.4	1402	1465	-13.2	-33.7	-62.7	-416.0	22.6	-1.6	21.6
48TH	634.00	-14.9	-50.0	1263	1465	-11.8	-34.1	-44.2	-366.7	17.5	-.9	18.8

TABLE 7. SHEAR AND MOMENT DIAGRAMS : HOUSTON NATIONAL BANK
WIND DIRECTION 330 CONFIGURATION A REFERENCE PRESSURE 30.0 PSF GUST FACTOR 1.32

FLOOR	HEIGHT FT	X-FORCE KIPS	Y-FORCE KIPS	X-AREA SQ FT	Y-AREA SQ FT	X-PRESS PSF	Y-PRESS PSF	X-SHEAR KIPS	Y-SHEAR KIPS	X-MOMENT	Y-MOMENT	Z-MOMENT
										1000-FT-KIPS		
49TH	647.00	-11.7	-50.6	1123	1465	-10.4	-34.6	-29.3	-316.7	13.1	-.4	16.2
50TH	660.00	-8.3	-51.3	983	1465	-8.5	-35.1	-17.5	-266.1	9.3	-.1	13.5
51ST	673.00	-5.3	-52.1	844	1465	-6.3	-35.5	-9.2	-214.7	6.2	.0	10.9
52ND	686.00	-2.8	-52.8	704	1465	-3.9	-36.1	-3.9	-162.7	3.7	.1	8.3
53RD	699.00	-4.4	-51.2	564	1465	-7.8	-35.0	-1.1	-109.8	1.9	.2	5.6
54TH	712.00	-1.9	-38.0	424	1465	-4.4	-25.9	3.3	-58.6	.9	.1	3.0
55TH	725.00	5.2	-20.6	450	3718	11.5	-5.5	5.2	-20.6	.3	.1	1.0

TABLE 7. SHEAR AND MOMENT DIAGRAMS : HOUSTON NATIONAL BANK
WIND DIRECTION 340 CONFIGURATION A REFERENCE PRESSURE 30.0 PSF GUST FACTOR 1.32

FLOOR	HEIGHT FT	X-FORCE KIPS	Y-FORCE KIPS	X-AREA SQ FT	Y-AREA SQ FT	X-PRESS PSF	Y-PRESS PSF	X-SHEAR KIPS	Y-SHEAR KIPS	X-MOMENT	Y-MOMENT 1000-FT-KIPS	Z-MOMENT
GRND	0.00	-15.1	-17.0	3024	3024	-5.0	-5.6	-1035.3	-4211.2	1528.7	-349.5	-58.3
BASE	12.00	-8.5	-9.5	1512	1512	-5.6	-6.3	-1020.1	-4194.1	1478.3	-337.1	-57.8
MEZZ	18.00	-29.2	-32.4	4536	4536	-6.4	-7.1	-1011.7	-4184.6	1453.1	-331.1	-57.3
2ND	36.00	-24.8	-32.6	3276	6552	-7.6	-5.0	-982.4	-4152.2	1378.1	-313.1	-55.2
3RD	49.00	-5.2	-8.7	696	1512	-7.5	-5.7	-957.6	-4119.6	1324.4	-300.5	-52.7
SILL	52.00	-16.7	-31.9	2320	5040	-7.2	-6.3	-952.4	-4111.0	1312.0	-297.6	-52.0
4TH	62.00	-21.0	-53.8	3016	6552	-7.0	-8.2	-935.6	-4079.0	1271.1	-288.2	-49.8
5TH	75.00	-21.0	-63.2	3016	6552	-6.9	-9.7	-914.7	-4025.2	1218.4	-276.2	-46.3
6TH	88.00	-8.1	-25.2	1160	2520	-7.0	-10.0	-893.7	-3962.0	1166.5	-264.4	-42.9
DUMY	93.00	-12.8	-42.4	1483	4032	-8.6	-10.5	-885.6	-3936.8	1146.7	-260.0	-41.6
7TH	101.00	-21.4	-72.4	2183	6552	-9.8	-11.1	-872.8	-3894.4	1115.4	-252.9	-39.2
8TH	114.00	-20.9	-77.0	1903	6552	-11.0	-11.7	-851.5	-3822.0	1065.2	-241.7	-35.2
9TH	127.00	-10.8	-43.3	909	3528	-11.9	-12.3	-830.5	-3745.0	1016.0	-230.8	-31.6
DUMY	134.00	-9.1	-36.3	744	1512	-12.3	-24.0	-819.8	-3701.7	990.0	-225.0	-29.9
10TH	140.00	-20.3	-80.1	1612	3276	-12.6	-24.5	-810.6	-3665.4	967.9	-220.1	-28.2
11TH	153.00	-21.0	-82.1	1612	3276	-13.0	-25.1	-790.3	-3585.3	920.8	-209.7	-24.7
12TH	166.00	-21.8	-83.8	1612	3276	-13.5	-25.6	-769.3	-3503.2	874.7	-199.6	-21.0
13TH	179.00	-22.5	-85.4	1612	3276	-13.9	-26.1	-747.5	-3419.4	829.7	-189.7	-17.3
14TH	192.00	-23.2	-87.0	1612	3276	-14.4	-26.6	-725.0	-3334.0	785.8	-180.1	-13.7
15TH	205.00	-23.7	-88.7	1612	3276	-14.7	-27.1	-701.8	-3246.9	743.0	-170.9	-10.2
16TH	218.00	-23.5	-90.3	1612	3276	-14.6	-27.6	-678.1	-3158.3	701.4	-161.9	-6.7
17TH	231.00	-23.3	-91.9	1612	3276	-14.4	-28.1	-654.7	-3068.0	660.9	-153.2	-3.3
18TH	244.00	-23.1	-93.5	1612	3276	-14.3	-28.6	-631.4	-2976.1	621.6	-144.9	.0
19TH	257.00	-22.8	-95.2	1612	3276	-14.1	-29.1	-608.3	-2882.5	583.5	-136.8	3.3
20TH	270.00	-21.5	-96.8	1612	3276	-13.3	-29.6	-585.5	-2787.3	546.7	-129.1	6.5
21ST	283.00	-20.1	-98.4	1612	3276	-12.5	-30.0	-564.1	-2690.5	511.1	-121.6	9.6
22ND	296.00	-17.6	-99.7	1612	3276	-10.9	-30.4	-544.0	-2592.1	476.7	-114.4	12.5
23RD	309.00	-16.2	-101.1	1612	3276	-10.0	-30.9	-526.4	-2492.3	443.7	-107.4	15.2
24TH	322.00	-17.4	-102.2	1612	3276	-10.8	-31.2	-510.2	-2391.3	411.9	-100.7	17.8
25TH	335.00	-18.6	-103.3	1612	3276	-11.6	-31.5	-492.8	-2289.1	381.5	-94.2	20.2
26TH	348.00	-17.9	-104.3	1612	3276	-11.1	-31.8	-474.2	-2185.8	352.4	-87.9	22.4
27TH	361.00	-4.7	-104.6	1612	3276	-2.9	-31.9	-456.2	-2081.5	324.7	-81.8	24.5
28TH	374.00	1.8	-103.0	1612	3276	1.1	-31.5	-451.5	-1976.9	298.3	-75.9	27.0
29TH	387.00	12.0	-98.8	1612	3276	7.4	-30.2	-453.3	-1873.8	273.3	-70.1	29.4
30TH	400.00	-20.4	-87.4	1612	3276	-12.7	-26.7	-465.3	-1775.0	249.6	-64.1	31.1
31ST	413.00	-24.7	-90.4	1612	3276	-15.3	-27.6	-444.8	-1687.6	227.1	-58.2	30.9
32ND	426.00	-25.7	-86.2	1612	2635	-15.9	-32.7	-420.1	-1597.2	205.7	-52.5	31.0
33RD	439.00	-26.7	-86.6	1612	2635	-16.6	-32.9	-394.4	-1510.9	185.5	-47.3	30.6
34TH	452.00	-27.4	-87.0	1612	2635	-17.0	-33.0	-367.7	-1424.3	166.4	-42.3	30.2
35TH	465.00	-26.8	-87.2	1612	2635	-16.6	-33.1	-340.3	-1337.3	148.5	-37.7	29.8
36TH	478.00	-26.1	-87.4	1612	2635	-16.2	-33.2	-313.5	-1250.0	131.7	-33.5	29.4
37TH	491.00	-24.5	-87.6	1612	2635	-15.2	-33.2	-287.3	-1162.6	116.0	-29.5	29.0
38TH	504.00	-23.6	-87.8	1612	2635	-14.6	-33.3	-262.8	-1075.0	101.4	-26.0	28.4
39TH	517.00	-23.7	-87.3	1612	2635	-14.7	-33.1	-239.2	-987.3	88.0	-22.7	27.8
40TH	530.00	-23.8	-86.7	1612	2635	-14.8	-32.9	-215.5	-900.0	75.8	-19.7	27.1
41ST	543.00	-22.2	-87.0	1612	2635	-13.8	-33.0	-191.7	-813.3	64.6	-17.1	26.2
42ND	556.00	-9.7	-85.8	1612	2635	-6.0	-32.6	-169.5	-726.3	54.6	-14.8	25.4
43RD	569.00	-2.3	-79.8	1612	2635	-1.4	-30.3	-159.8	-640.5	45.7	-12.6	25.2
44TH	582.00	10.2	-70.1	1612	2635	6.3	-26.6	-157.5	-560.7	37.9	-10.6	24.7
45TH	595.00	-23.7	-47.1	1612	2635	-14.7	-17.9	-167.7	-490.6	31.1	-8.4	23.7
46TH	608.00	-26.4	-73.6	1542	2635	-17.1	-27.9	-144.1	-443.5	25.0	-6.4	21.0
47TH	621.00	-23.7	-46.8	1402	1465	-16.9	-32.0	-117.6	-370.0	19.7	-4.7	19.4
48TH	634.00	-21.4	-47.1	1263	1465	-16.9	-32.1	-93.9	-323.2	15.2	-3.3	16.6

TABLE 7. SHEAR AND MOMENT DIAGRAMS : HOUSTON NATIONAL BANK
WIND DIRECTION 340 CONFIGURATION A REFERENCE PRESSURE 39.0 PSF GUST FACTOR 1.32

FLOOR	HEIGHT FT	X-FORCE KIPS	Y-FORCE KIPS	X-AREA SQ FT	Y-AREA SQ FT	X-PRESS PSF	Y-PRESS PSF	X-SHEAR KIPS	Y-SHEAR KIPS	X-MOMENT	Y-MOMENT	Z-MOMENT
										1000-FT-KIPS		
49TH	647.00	-18.9	-46.9	1123	1465	-16.8	-32.0	-72.5	-276.1	11.3	-2.3	13.9
50TH	660.00	-15.9	-45.8	983	1465	-16.1	-31.3	-53.7	-229.2	8.1	-1.4	11.4
51ST	673.00	-13.0	-44.7	844	1465	-15.4	-30.5	-37.8	-183.4	5.4	-.8	9.0
52ND	686.00	-10.3	-43.8	704	1465	-14.6	-29.9	-24.8	-138.7	3.3	-.4	6.7
53RD	699.00	-9.1	-41.8	564	1465	-16.1	-28.6	-14.5	-94.9	1.8	-.2	4.5
54TH	712.00	-5.1	-33.1	424	1465	-12.0	-22.6	-5.4	-53.1	.8	-.0	2.4
55TH	725.00	-.4	-19.9	450	3718	-.8	-5.4	-.4	-19.9	.3	-.0	.9

TABLE 7. SHEAR AND MOMENT DIAGRAMS : HOUSTON NATIONAL BANK

WIND DIRECTION 350 CONFIGURATION A REFERENCE PRESSURE 30.0 PSF GUST FACTOR 1.32

FLOOR	HEIGHT FT	X-FORCE KIPS	Y-FORCE KIPS	X-AREA SQ FT	Y-AREA SQ FT	X-PRESS PSF	Y-PRESS PSF	X-SHEAR KIPS	Y-SHEAR KIPS	X-MOMENT	Y-MOMENT 1000-FT-KIPS	Z-MOMENT
GRND	0.00	-21.7	-26.6	3024	3024	-7.2	-8.8	-1292.6	-4020.3	1446.0	-453.7	-80.8
BASE	12.00	-12.3	-13.6	1512	1512	-8.2	-9.0	-1270.9	-3993.6	1397.9	-438.3	-79.1
MEZZ	18.00	-43.0	-41.9	4536	4536	-9.5	-9.2	-1258.6	-3980.0	1374.0	-430.7	-78.0
2ND	36.00	-36.1	-28.9	3276	6552	-11.0	-4.4	-1215.6	-3938.1	1302.7	-408.5	-73.7
3RD	49.00	-7.2	-7.9	696	1512	-10.4	-5.2	-1179.5	-3909.2	1251.7	-392.9	-69.5
SILL	52.00	-22.9	-29.5	2320	5040	-9.8	-5.9	-1172.3	-3901.3	1240.0	-389.4	-68.6
4TH	62.00	-28.0	-50.8	3016	6552	-9.3	-7.8	-1149.4	-3871.9	1201.1	-377.8	-65.4
5TH	75.00	-27.4	-59.2	3016	6552	-9.1	-9.0	-1121.4	-3821.0	1151.1	-363.0	-60.7
6TH	88.00	-10.4	-22.4	1160	2520	-9.0	-8.9	-1093.9	-3761.8	1101.8	-348.6	-56.2
DUMY	93.00	-14.8	-36.6	1483	4032	-10.0	-9.1	-1083.5	-3739.4	1083.1	-343.2	-54.5
7TH	101.00	-23.3	-63.0	2183	6552	-10.7	-9.6	-1068.7	-3702.8	1053.3	-334.6	-51.9
8TH	114.00	-21.7	-71.7	1903	6552	-11.4	-10.9	-1045.4	-3639.8	1005.6	-320.8	-47.6
9TH	127.00	-10.8	-42.2	909	3528	-11.9	-12.0	-1023.7	-3568.1	958.7	-307.4	-43.5
DUMY	134.00	-9.0	-34.3	744	1512	-12.1	-22.7	-1012.9	-3525.9	933.9	-300.2	-41.4
10TH	140.00	-19.8	-75.3	1612	3276	-12.3	-23.0	-1004.0	-3491.6	912.9	-294.2	-39.6
11TH	153.00	-20.3	-76.7	1612	3276	-12.6	-23.4	-984.2	-3416.3	868.0	-281.3	-35.7
12TH	166.00	-20.8	-78.4	1612	3276	-12.9	-23.9	-963.9	-3339.5	824.0	-268.6	-31.8
13TH	179.00	-21.2	-80.0	1612	3276	-13.2	-24.4	-943.1	-3261.2	781.1	-256.2	-28.0
14TH	192.00	-21.7	-81.6	1612	3276	-13.5	-24.9	-921.9	-3181.2	739.3	-244.1	-24.3
15TH	205.00	-22.3	-83.2	1612	3276	-13.8	-25.4	-900.2	-3099.6	698.4	-232.2	-20.7
16TH	218.00	-23.2	-84.9	1612	3276	-14.4	-25.9	-877.9	-3016.3	658.7	-220.7	-17.2
17TH	231.00	-24.1	-86.5	1612	3276	-14.9	-26.4	-854.7	-2931.5	620.0	-209.4	-13.8
18TH	244.00	-24.9	-88.1	1612	3276	-15.5	-26.9	-830.6	-2845.0	582.5	-198.5	-10.5
19TH	257.00	-25.7	-89.7	1612	3276	-15.9	-27.4	-805.7	-2756.9	546.1	-187.8	-7.3
20TH	270.00	-25.1	-91.9	1612	3276	-15.6	-28.1	-780.0	-2667.2	510.8	-177.5	-4.3
21ST	283.00	-24.5	-94.4	1612	3276	-15.2	-28.8	-754.9	-2575.2	476.7	-167.5	-1.3
22ND	296.00	-21.9	-97.0	1612	3276	-13.6	-29.6	-730.4	-2480.9	443.9	-157.9	1.6
23RD	309.00	-21.2	-99.7	1612	3276	-13.1	-30.4	-708.5	-2383.9	412.2	-148.5	4.3
24TH	322.00	-21.4	-101.8	1612	3276	-13.3	-31.1	-687.3	-2284.2	381.9	-139.5	7.0
25TH	335.00	-21.6	-103.8	1612	3276	-13.4	-31.7	-665.9	-2182.3	352.9	-130.7	9.6
26TH	348.00	-21.0	-106.1	1612	3276	-13.1	-32.4	-644.4	-2078.6	325.2	-122.1	12.1
27TH	361.00	-10.4	-107.2	1612	3276	-6.4	-32.7	-623.3	-1972.5	298.8	-113.9	14.6
28TH	374.00	-.3	-105.0	1612	3276	-.2	-32.0	-612.9	-1865.3	273.9	-105.9	17.7
29TH	387.00	9.6	-99.6	1612	3276	5.9	-30.4	-612.6	-1760.3	250.3	-97.9	20.6
30TH	400.00	-23.7	-85.9	1612	3276	-14.7	-26.2	-622.2	-1660.7	228.1	-89.9	22.8
31ST	413.00	-28.9	-89.2	1612	3276	-17.9	-27.2	-598.5	-1574.8	207.1	-81.9	22.7
32ND	426.00	-30.7	-84.1	1612	2635	-19.0	-31.9	-569.6	-1485.5	187.2	-74.4	22.9
33RD	439.00	-32.5	-84.4	1612	2635	-20.2	-32.0	-538.9	-1401.4	168.4	-67.1	22.6
34TH	452.00	-34.1	-84.7	1612	2635	-21.1	-32.1	-506.4	-1317.0	150.7	-60.4	22.4
35TH	465.00	-33.9	-83.6	1612	2635	-21.0	-31.7	-472.4	-1232.3	134.2	-54.0	22.2
36TH	478.00	-33.7	-82.6	1612	2635	-20.9	-31.3	-438.5	-1148.7	118.7	-48.1	22.0
37TH	491.00	-32.0	-82.2	1612	2635	-19.9	-31.2	-404.8	-1066.2	104.3	-42.6	21.7
38TH	504.00	-30.9	-81.9	1612	2635	-19.2	-31.1	-372.7	-983.9	91.0	-37.5	21.3
39TH	517.00	-29.8	-82.0	1612	2635	-18.5	-31.1	-341.8	-902.0	78.7	-32.9	20.9
40TH	530.00	-28.6	-82.4	1612	2635	-17.7	-31.3	-312.1	-820.0	67.5	-28.6	20.5
41ST	543.00	-27.9	-83.7	1612	2635	-17.3	-31.8	-283.5	-737.5	57.4	-24.8	20.1
42ND	556.00	-23.8	-83.0	1612	2635	-14.8	-31.5	-255.6	-653.9	48.4	-21.3	19.8
43RD	569.00	-13.9	-76.5	1612	2635	-8.6	-29.0	-231.8	-570.8	40.4	-18.1	20.3
44TH	582.00	-11.5	-65.5	1612	2635	-7.1	-24.9	-217.9	-494.3	33.5	-15.2	20.5
45TH	595.00	-23.8	-38.7	1612	2635	-14.8	-14.7	-206.4	-428.8	27.5	-12.4	20.2
46TH	608.00	-25.5	-68.1	1542	2635	-16.5	-25.9	-182.6	-390.1	22.1	-9.9	17.9
47TH	621.00	-24.6	-39.3	1402	1465	-17.5	-26.8	-157.2	-322.0	17.5	-7.7	16.8
48TH	634.00	-24.0	-39.9	1263	1465	-19.0	-27.2	-132.6	-282.6	13.6	-5.8	14.4

TABLE 7. SHEAR AND MOMENT DIAGRAMS : HOUSTON NATIONAL BANK
WIND DIRECTION 350 CONFIGURATION A REFERENCE PRESSURE 30.0 PSF GUST FACTOR 1.32

FLOOR	HEIGHT FT	X-FORCE KIPS	Y-FORCE KIPS	X-AREA SQ FT	Y-AREA SQ FT	X-PRESS PSF	Y-PRESS PSF	X-SHEAR KIPS	Y-SHEAR KIPS	X-MOMENT	Y-MOMENT	Z-MOMENT
										1000-FT-KIPS		
49TH	647.00	-22.8	-40.1	1123	1465	-20.3	-27.4	-108.6	-242.8	10.2	-4.2	12.0
50TH	660.00	-20.5	-39.4	983	1465	-20.9	-26.9	-85.9	-202.7	7.3	-3.0	9.8
51ST	673.00	-18.1	-38.8	844	1465	-21.4	-26.5	-65.3	-163.3	4.9	-2.0	7.8
52ND	686.00	-15.4	-38.1	704	1465	-21.9	-26.0	-47.3	-124.5	3.0	-1.2	5.8
53RD	699.00	-12.8	-36.6	564	1465	-22.7	-25.0	-31.9	-86.4	1.7	-.7	3.9
54TH	712.00	-6.9	-30.4	424	1465	-16.3	-20.7	-19.1	-49.8	.8	-.4	2.1
55TH	725.00	-12.2	-19.4	450	3718	-27.0	-5.2	-12.2	-19.4	.3	-.2	.8

TABLE 7. HOUSTON NATIONAL BANK

PROJECT 7510 — CONFIGURATION A

SCALE = 400 — REF. PRESSURE = 30.0

GUST FACTOR = 1.32 — STANDARD FLOOR HEIGHT = 13.00

NUMBER OF SIDES = 8 — NO. OF FLOORS = 60

SIDE	ANGLE	Z-AXIS
1	0.0	1.860
2	90.0	4.180
3	180.0	1.860
4	270.0	3.380
5	0.0	5.700
6	90.0	4.180
7	180.0	-1.860
8	270.0	3.380

FLOOR #	LABEL	HEIGHT-FT
1	GRND	12.00
2	BASE	6.00
3	MEZZ	18.00
4	2ND	13.00
5	3RD	3.00
6	SILL	10.00
7	4TH	13.00
8	5TH	13.00
9	6TH	5.00
10	DUMY	8.00
11	7TH	13.00
12	8TH	13.00
13	9TH	7.00
14	DUMY	6.00
15	10TH	13.00
16	11TH	13.00
17	12TH	13.00
18	13TH	13.00
19	14TH	13.00
20	15TH	13.00
21	16TH	13.00
22	17TH	13.00
23	18TH	13.00
24	19TH	13.00
25	20TH	13.00
26	21ST	13.00
27	22ND	13.00
28	23RD	13.00
29	24TH	13.00
30	25TH	13.00
31	26TH	13.00
32	27TH	13.00
33	28TH	13.00
34	29TH	13.00
35	30TH	13.00
36	31ST	13.00
37	32ND	13.00
38	33RD	13.00
39	34TH	13.00
40	35TH	13.00
41	36TH	13.00
42	37TH	13.00
43	38TH	13.00
44	39TH	13.00
45	40TH	13.00
46	41ST	13.00
47	42ND	13.00
48	43RD	13.00
49	44TH	13.00
50	45TH	13.00
51	46TH	13.00
52	47TH	13.00
53	48TH	13.00
54	49TH	13.00
55	50TH	13.00
56	51ST	13.00
57	52ND	13.00
58	53RD	13.00
59	54TH	13.00
60	55TH	33.00

APPENDIX A

PRESSURE DATA

Note: Pressure coefficients arc defined in Section 4.3.

Pressure tap designation is explained in Figure 3.

APPENDIX A -- PRESSURE DATA: CONFIGURATION A: HOUSTON NATIONAL BANK

WD	TAP	CPMEAN	CPRMS	CPMAX	CPMIN
0	1	.026	.162	.592	-.467
0	2	-.053	.160	.675	-.603
0	3	-.236	.115	.148	-.582
0	4	-.248	.113	.150	-.641
0	5	.099	.122	.526	-.300
0	6	.005	.112	.415	-.412
0	7	-.254	.111	.181	-.704
0	8	-.272	.107	.134	-.635
0	9	-.170	.094	.142	-.465
0	10	-.261	.094	.058	-.621
0	11	-.308	.129	.161	-.883
0	12	-.296	.125	.093	-.933
0	13	-.224	.154	.335	-.770
0	14	-.379	.132	.355	-.847
0	15	.354	.165	1.368	-.089
0	16	.350	.162	.907	-.117
0	17	-.359	.132	.030	-.897
0	18	-.471	.141	-.026	-.973
0	19	.337	.185	.986	-.371
0	20	.333	.179	.985	-.435
0	21	-.347	.141	.093	-.934
0	22	-.527	.144	-.068	-1.034
0	23	.280	.165	.905	-.239
0	24	.273	.166	.845	-.210
0	25	-.204	.156	.335	-.759
0	26	-.151	.173	.429	-.755
0	27	.297	.160	.902	-.200
0	28	.285	.151	.862	-.256
0	29	-.258	.140	.233	-.873
0	30	-.397	.150	.043	-.976
0	31	.289	.160	.857	-.175
0	32	.269	.161	.906	-.320
0	101	.362	.155	.848	-.225
0	102	.123	.134	.638	-.308
0	103	.281	.151	.882	-.173
0	104	.051	.123	.543	-.332
0	105	.389	.158	.926	-.129
0	106	-.144	.121	.302	-.553
0	107	.189	.141	.714	-.314
0	108	.414	.176	1.147	-.161
0	109	-.246	.135	.294	-.839
0	110	-.279	.178	.623	-.911
0	111	-.285	.188	.638	-1.106
0	112	-.361	.158	.337	-1.084
0	113	.330	.156	.809	-.185
0	114	.410	.183	1.012	-.177
0	115	.400	.179	1.027	-.205
0	116	.172	.234	.848	-.737
0	117	-.016	.118	.393	-.414
0	118	.196	.156	.708	-.271
0	119	-.306	.145	.212	-.863
0	120	-.295	.142	.229	-.807
0	121	-.219	.140	.307	-.779
0	122	-.025	.132	.385	-.506
0	123	.282	.213	.977	-.758
0	124	.450	.179	1.099	-.058
0	125	.418	.158	.931	-.076
0	126	.405	.169	.947	-.161
0	127	-.356	.131	.017	-.811
0	128	-.340	.131	.041	-.812
0	129	-.148	.093	.254	-.462
0	130	.229	.140	.744	-.224
0	131	.382	.183	1.125	-.226
0	132	.386	.166	1.249	-.040
0	133	.291	.141	.806	-.168
0	134	-.138	.125	.244	-.624
0	135	-.116	.128	.309	-.774
0	136	-.049	.131	.397	-.626
0	137	.047	.113	.451	-.345
0	138	.184	.130	.666	-.291
0	139	.303	.139	.814	-.179
0	140	.368	.153	.899	-.151
0	141	.361	.156	.863	-.168
0	142	-.121	.163	.393	-.758
0	143	-.032	.188	.506	-.707
0	144	-.328	.191	.389	-.934
0	145	.276	.139	.681	-.149
0	146	.341	.164	.867	-.340
0	147	.346	.165	.869	-.279
0	148	.041	.250	.721	-1.271
0	149	-.074	.117	.315	-.423
0	150	.116	.148	.647	-.440
0	151	-.281	.172	.370	-.889
0	152	-.312	.163	.290	-.879
0	153	-.133	.138	.326	-.639
0	154	.013	.128	.463	-.406
0	155	.153	.202	.714	-.608
0	156	.362	.166	1.001	-.068
0	157	.275	.152	.863	-.184
0	158	.300	.163	.906	-.206
0	159	-.342	.135	.132	-.993
0	160	-.322	.134	.166	-.904
0	161	-.147	.106	.232	-.461
0	162	.153	.134	.777	-.242
0	163	.213	.174	.733	-.440
0	164	.295	.161	.826	-.243
0	165	.218	.133	.774	-.185
0	166	-.114	.117	.316	-.520
0	167	-.118	.116	.263	-.523
0	168	-.032	.118	.441	-.399
0	169	.045	.108	.424	-.368
0	170	.166	.130	.631	-.288
0	171	.234	.137	.681	-.198
0	172	.263	.155	.770	-.308
0	173	.217	.152	.763	-.446
0	174	-.147	.131	.255	-.741
0	175	-.012	.122	.374	-.468
0	176	.118	.118	.549	-.278
0	177	.168	.112	.636	-.205
0	178	.193	.128	.719	-.301
0	179	.140	.150	.662	-.585
0	180	.185	.145	.701	-.473
0	181	-.078	.103	.255	-.461
0	182	-.081	.103	.258	-.492
0	183	.002	.117	.424	-.415
0	184	.068	.109	.442	-.332
0	185	.137	.105	.569	-.205
0	186	.144	.118	.630	-.225
0	187	.090	.130	.549	-.377
0	188	.155	.127	.638	-.338
0	189	.170	.106	.672	-.219
0	190	.146	.118	.621	-.273
0	191	.064	.115	.528	-.367
0	201	-.059	.234	.678	-.803
0	202	.192	.183	.730	-.443
0	203	-.133	.127	.415	-.575
0	204	-.272	.127	.191	-.723
0	205	-.205	.121	.230	-.594
0	206	.172	.245	.816	-.716
0	207	.201	.202	.848	-.734
0	208	.070	.144	.648	-.442
0	209	-.038	.118	.408	-.506
0	210	-.091	.094	.238	-.449
0	211	.136	.245	.869	-.640
0	212	.119	.215	.793	-.820
0	213	.147	.128	.641	-.240
0	214	-.011	.100	.323	-.407
0	215	-.079	.109	.271	-.487
0	216	.204	.227	.853	-.485
0	217	.263	.196	.863	-.400
0	218	.126	.129	.567	-.422
0	219	.291	.213	1.114	-.457
0	220	-.085	.244	.645	-1.104
0	221	.068	.229	.731	-.806
0	222	.132	.112	.495	-.337
0	223	-.018	.110	.320	-.468
0	224	-.162	.118	.208	-.635
0	225	.435	.195	1.012	-.167
0	226	.398	.170	.962	-.153
0	227	.376	.172	.934	-.190

APPENDIX A -- PRESSURE DATA: CONFIGURATION A: HOUSTON NATIONAL BANK

WD	TAP	CPMEAN	CPRMS	CPMAX	CPMIN
0	228	.385	.201	1.234	-.280
0	229	-.039	.179	.594	-.719
0	230	-.026	.183	.578	-.722
0	231	.119	.129	.646	-.307
0	232	-.143	.118	.311	-.535
0	233	-.145	.110	.241	-.509
0	234	.355	.176	.925	-.279
0	235	.364	.176	.952	-.283
0	236	.310	.171	.919	-.213
0	237	.383	.171	1.024	-.159
0	238	.305	.197	.859	-.429
0	239	.323	.190	.879	-.416
0	240	.229	.163	.755	-.345
0	241	.152	.154	.617	-.487
0	242	.114	.104	.458	-.258
0	243	-.062	.112	.324	-.471
0	244	-.212	.119	.202	-.667
0	245	.198	.176	.778	-.613
0	246	.202	.140	.610	-.222
0	247	.300	.158	.905	-.233
0	248	.288	.176	.902	-.378
0	249	.351	.162	.907	-.242
0	250	.358	.166	.948	-.171
0	251	.137	.188	.695	-.585
0	252	.083	.210	.709	-.838
0	253	.195	.131	.620	-.226
0	254	.151	.115	.604	-.263
0	255	.096	.118	.551	-.325
0	256	-.127	.118	.319	-.560
0	257	-.112	.114	.280	-.556
0	258	.270	.154	.821	-.222
0	259	.282	.165	.856	-.184
0	260	.224	.177	.908	-.330
0	261	.115	.235	.843	-1.446
0	262	.293	.136	.835	-.246
0	263	.157	.155	.637	-.462
0	264	.175	.129	.650	-.290
0	265	.133	.123	.577	-.304
0	266	.086	.098	.446	-.295
0	267	-.033	.114	.315	-.510
0	268	-.088	.114	.262	-.559
0	269	.167	.157	.659	-.379
0	270	.179	.149	.908	-.296
0	271	.162	.136	.675	-.247
0	272	.114	.121	.486	-.269
0	273	.072	.119	.481	-.305
0	274	.035	.095	.357	-.259
0	275	-.037	.114	.414	-.412
0	276	-.068	.115	.375	-.452
0	277	.107	.119	.560	-.263
0	278	.105	.101	.412	-.224
0	279	.051	.115	.486	-.340
0	280	.091	.115	.502	-.310
0	281	.140	.128	.607	-.287
0	282	.184	.122	.674	-.177
0	283	.146	.132	.637	-.254
0	284	.111	.133	.839	-.305
0	285	.087	.121	.532	-.287
0	286	.058	.096	.375	-.240
0	287	-.012	.111	.333	-.381
0	288	-.045	.109	.296	-.411
0	301	-.261	.126	.159	-.700
0	302	-.270	.103	.109	-.637
0	303	-.250	.116	.173	-.647
0	304	-.259	.116	.146	-.644
0	305	-.261	.116	.182	-.622
0	306	-.248	.100	.105	-.593
0	307	-.247	.119	.154	-.641
0	308	-.287	.123	.116	-.656
0	309	-.216	.121	.216	-.666
0	310	-.181	.101	.158	-.521
0	311	-.187	.120	.216	-.577
0	312	-.232	.116	.159	-.599
0	313	-.244	.117	.167	-.648
0	314	-.270	.100	.042	-.639
0	315	-.297	.122	.093	-.794
0	316	-.317	.126	.114	-.784
0	317	-.220	.121	.150	-.667
0	318	-.237	.094	.069	-.538
0	319	-.237	.112	.138	-.577
0	320	-.256	.116	.107	-.772
0	321	-.260	.117	.173	-.733
0	322	-.251	.119	.145	-.668
0	323	-.381	.109	-.015	-.794
0	324	-.205	.128	.220	-.659
0	325	-.204	.127	.227	-.646
0	326	-.228	.111	.138	-.648
0	327	-.236	.136	.193	-.753
0	328	-.262	.136	.177	-.873
0	329	-.263	.135	.312	-.803
0	330	-.290	.121	.102	-.797
0	331	-.143	.130	.388	-.714
0	332	-.155	.130	.360	-.732
0	333	-.167	.133	.266	-.712
0	334	-.233	.114	.137	-.693
0	335	-.247	.138	.329	-.819
0	336	-.257	.133	.152	-.861
0	337	-.252	.134	.161	-.927
0	338	-.141	.105	.230	-.569
0	339	-.125	.124	.304	-.624
0	340	-.146	.125	.248	-.616
0	341	-.154	.128	.231	-.648
0	342	-.212	.119	.226	-.810
0	343	-.203	.139	.338	-.794
0	344	-.208	.138	.330	-.814
0	345	-.115	.118	.314	-.519
0	346	-.121	.099	.270	-.431
0	347	-.105	.118	.352	-.497
0	348	-.119	.119	.323	-.507
0	349	-.119	.122	.306	-.555
0	350	-.125	.104	.222	-.588
0	351	-.139	.122	.235	-.848
0	352	-.141	.103	.156	-.682
0	353	-.147	.127	.252	-.620
0	354	-.125	.102	.177	-.464
0	355	-.129	.117	.232	-.540
0	356	-.114	.114	.250	-.530
0	357	-.111	.115	.257	-.537
0	358	-.095	.092	.218	-.423
0	359	-.103	.107	.258	-.510
0	360	-.115	.109	.226	-.713
0	361	-.108	.112	.242	-.688
0	362	-.097	.092	.195	-.515
0	401	-.289	.132	.230	-.789
0	402	-.305	.137	.248	-.909
0	403	-.223	.115	.139	-.704
0	404	-.221	.100	.138	-.575
0	405	-.216	.115	.195	-.623
0	406	-.312	.126	.064	-1.008
0	407	-.307	.127	.093	-1.079
0	408	-.290	.100	.098	-.648
0	409	-.254	.107	.160	-.655
0	410	-.262	.108	.149	-.668
0	411	-.326	.127	.113	-.764
0	412	-.319	.107	.096	-.832
0	413	-.312	.122	.061	-1.027
0	414	-.332	.122	.039	-.852
0	415	-.297	.125	.100	-.919
0	416	-.345	.116	.036	-.765
0	417	-.331	.128	.080	-.899
0	418	-.358	.135	.113	-.912
0	419	-.359	.140	.123	-.930
0	420	-.443	.158	.017	-1.163
0	421	-.249	.149	.350	-.728
0	422	-.389	.150	.052	-.935
0	423	-.464	.170	.076	-1.185
0	424	-.419	.150	.037	-1.056
0	425	-.292	.138	.191	-.854
0	426	-.419	.127	-.007	-.865
0	427	-.306	.151	.132	-1.029

APPENDIX A -- PRESSURE DATA: CONFIGURATION A: HOUSTON NATIONAL BANK

WD	TAP	CPMEAN	CPRMS	CPMAX	CPMIN
0	428	-.373	.140	.073	-.948
0	429	-.392	.172	.245	-1.177
0	430	-.329	.163	.129	-1.352
0	431	-.428	.169	.136	-1.096
0	432	-.420	.116	-.060	-.864
0	433	-.382	.130	.088	-.883
0	434	-.393	.134	.198	-.935
0	435	-.391	.134	.076	-1.015
0	436	-.354	.112	.050	-.772
0	437	-.315	.128	.147	-.802
0	438	-.301	.132	.161	-.846
0	439	-.285	.127	.192	-.769
0	440	-.319	.105	-.016	-.724
0	441	-.332	.124	.039	-.762
0	442	-.385	.137	.015	-.868
0	443	-.333	.123	.062	-.697
0	444	-.352	.112	.049	-.841
0	445	-.046	.180	.521	-.625
0	446	-.482	.232	.183	-1.889
0	447	-.408	.194	.203	-1.260
0	448	-.351	.138	.111	-1.025
0	449	-.328	.148	.176	-.796
0	450	-.363	.154	.165	-.965
0	451	-.371	.156	.154	-.947
0	452	-.392	.120	-.005	-.994
0	453	-.384	.151	.080	-1.416
0	454	-.415	.154	.027	-1.483
0	455	-.449	.201	.066	-1.222
0	456	-.401	.125	-.000	-.861
0	457	-.340	.143	.116	-.873
0	458	-.374	.132	.021	-.877
0	459	-.337	.125	.062	-.857
0	460	-.358	.109	-.040	-.735
0	461	-.194	.120	.380	-.636
0	462	-.201	.121	.285	-.642
0	463	-.251	.134	.269	-.737
0	464	-.401	.135	.061	-.879
0	465	-.395	.154	.168	-1.203
0	466	-.346	.134	.154	-.792
0	467	-.373	.137	.158	-.895
0	468	-.496	.138	-.076	-1.067
0	469	-.152	.114	.172	-.604
0	470	-.123	.107	.195	-.564
0	471	-.113	.112	.260	-.607
0	472	-.248	.127	.195	-.705
0	473	-.373	.165	.159	-.949
0	474	-.464	.179	.004	-1.288
0	475	-.438	.165	-.000	-1.179
0	476	-.538	.132	-.055	-1.025
0	477	-.097	.109	.237	-.535
0	478	-.100	.106	.259	-.434
0	479	-.110	.107	.233	-.476
0	480	-.228	.107	.134	-.655
0	481	-.213	.130	.218	-.686
0	483	-.457	.190	.064	-1.324
0	484	-.571	.178	-.130	-1.610
0	485	-.045	.120	.332	-.485
0	486	.100	.108	.468	-.280
0	501	-.008	.102	.348	-.364
0	502	.125	.129	.633	-.329
0	503	-.083	.114	.306	-.502
0	504	.138	.132	.590	-.322
0	505	-.018	.104	.457	-.335
0	506	.081	.120	.678	-.312
0	507	.149	.144	.712	-.389
0	508	.106	.124	.733	-.256
0	509	.114	.104	.515	-.199
0	510	-.014	.115	.419	-.355
0	511	.051	.119	.534	-.338
0	512	.098	.120	.587	-.391
0	601	-.049	.253	.643	-1.077
0	602	-.385	.135	.143	-.948
0	603	-.213	.110	.119	-.635
0	604	-.177	.124	.283	-.641
0	605	-.096	.107	.245	-.542
0	606	-.093	.207	.509	-.836
0	607	-.180	.123	.246	-.667
0	608	-.147	.113	.235	-.551
0	609	-.110	.206	.500	-1.031
0	610	-.349	.141	.085	-.868
0	611	-.180	.121	.229	-.621
0	612	-.168	.116	.253	-.579
0	613	-.099	.112	.290	-.539
0	614	.176	.103	.555	-.232
0	615	-.014	.131	.492	-.505
0	701	-.079	.113	.375	-.447
0	702	-.073	.104	.245	-.548
0	703	-.073	.114	.313	-.447
0	704	-.097	.121	.306	-.514
0	705	-.084	.116	.319	-.474
0	706	-.057	.097	.329	-.422
0	707	-.047	.118	.319	-.534
0	708	-.157	.118	.250	-.594
0	709	-.100	.118	.307	-.526
0	710	-.086	.099	.252	-.576
0	711	-.041	.112	.359	-.461
0	712	-.086	.122	.301	-.558
0	801	-.064	.097	.263	-.393
0	802	-.097	.111	.246	-.534
0	803	-.230	.130	.141	-.751
0	804	-.254	.139	.170	-.782
0	805	-.294	.110	.088	-.701
0	806	-.070	.105	.306	-.570
0	807	-.158	.127	.411	-.635
0	808	-.278	.127	.217	-.801
0	809	-.060	.100	.274	-.530
0	810	-.092	.118	.318	-.664
0	811	-.133	.134	.378	-.829
0	812	-.153	.142	.334	-.710
0	813	-.277	.131	.114	-.710
0	814	-.048	.111	.350	-.406
0	815	-.130	.115	.256	-.486
0	816	-.012	.121	.478	-.374
0	817	-.108	.106	.357	-.478
0	818	-.121	.130	.267	-.815
0	819	-.070	.114	.313	-.446
0	820	-.049	.114	.369	-.478
0	821	.014	.111	.508	-.350
0	822	-.030	.140	.523	-.458
0	823	-.123	.135	.451	-.658
0	901	-.117	.118	.251	-.548
0	902	-.102	.117	.241	-.632
0	903	-.104	.102	.202	-.493
0	904	-.097	.117	.270	-.546
0	905	-.203	.124	.123	-.714
0	906	-.203	.125	.182	-.673
0	907	-.170	.114	.177	-.674
0	908	-.206	.141	.221	-.808
0	909	-.231	.135	.195	-.792
0	910	-.087	.184	.578	-.978
0	911	-.192	.121	.162	-.650
0	912	-.369	.196	.140	-1.211
0	913	-.337	.146	.109	-.963
0	914	-.129	.262	.758	-1.006
0	915	-.092	.234	.634	-.971
10	1	-.195	.169	.368	-.804
10	2	-.191	.137	.335	-.731
10	3	-.205	.127	.176	-.881
10	4	-.204	.113	.208	-.605
10	5	-.007	.122	.442	-.613
10	6	-.002	.098	.355	-.386
10	7	-.219	.122	.136	-.799
10	8	-.253	.115	.077	-.651
10	9	-.156	.093	.151	-.471
10	10	-.130	.093	.165	-.448
10	11	-.255	.148	.188	-.925
10	12	-.291	.136	.095	-.871
10	13	-.099	.182	.702	-.804
10	14	-.089	.154	.599	-.666
10	15	.316	.180	.975	-.231

APPENDIX A -- PRESSURE DATA: CONFIGURATION A: HOUSTON NATIONAL BANK

WD	TAP	CPMEAN	CPRMS	CPMAX	CPMIN
10	16	.254	.187	.939	-.412
10	17	-.313	.147	.213	-.867
10	18	-.149	.141	.424	-.688
10	19	.250	.164	.801	-.303
10	20	.197	.161	.697	-.358
10	21	-.290	.144	.238	-.820
10	22	-.423	.164	.113	-1.345
10	23	.224	.159	.744	-.345
10	24	.112	.158	.654	-.419
10	25	-.117	.175	.561	-.796
10	26	.107	.128	.638	-.434
10	27	.274	.151	.940	-.251
10	28	.214	.153	.936	-.449
10	29	-.194	.138	.213	-.706
10	30	-.092	.142	.327	-.627
10	31	.279	.168	.891	-.239
10	32	.166	.162	.902	-.379
10	101	.458	.163	.927	-.103
10	102	.271	.156	.864	-.264
10	103	.422	.178	1.010	-.169
10	104	.200	.147	.790	-.268
10	105	.422	.141	.845	.043
10	106	.043	.129	.518	-.447
10	107	.342	.152	.945	-.162
10	108	.392	.158	.890	-.045
10	109	.029	.130	.599	-.471
10	110	-.032	.194	.717	-.925
10	111	.006	.224	.760	-1.141
10	112	-.153	.231	.553	-1.366
10	113	.424	.160	.955	-.137
10	114	.462	.188	1.108	-.226
10	115	.405	.178	1.036	-.219
10	116	.383	.181	.907	-.308
10	117	.164	.120	.575	-.203
10	118	.327	.156	.869	-.182
10	119	-.208	.166	.430	-.885
10	120	-.187	.154	.487	-.905
10	121	-.007	.137	.524	-.524
10	122	.125	.138	.679	-.294
10	123	.415	.170	1.115	-.136
10	124	.407	.172	.977	-.435
10	125	.431	.174	.978	-.067
10	126	.385	.189	1.040	-.245
10	127	-.348	.149	.113	-.977
10	128	-.305	.157	.206	-.960
10	129	.016	.109	.417	-.457
10	130	.367	.152	.953	-.193
10	131	.425	.176	1.081	-.075
10	132	.274	.202	.933	-.619
10	133	.207	.155	.883	-.262
10	134	-.013	.132	.462	-.471
10	135	-.001	.129	.478	-.474
10	136	.095	.136	.645	-.378
10	137	.254	.135	.892	-.168
10	138	.329	.160	1.119	-.177
10	139	.388	.168	1.172	-.153
10	140	.379	.172	.933	-.216
10	141	.355	.157	.866	-.064
10	142	.052	.133	.519	-.430
10	143	.171	.148	.743	-.398
10	144	.004	.240	.643	-.963
10	145	.420	.160	.933	-.004
10	146	.421	.182	1.003	-.057
10	147	.369	.175	1.041	-.133
10	148	.333	.201	.932	-.346
10	149	.178	.117	.769	-.179
10	150	.289	.153	1.081	-.163
10	151	-.049	.195	.543	-.805
10	152	-.113	.183	.425	-.822
10	153	.051	.122	.564	-.329
10	154	.151	.143	.605	-.303
10	155	.311	.167	.783	-.280
10	156	.348	.163	.884	-.168
10	157	.290	.138	.761	-.142
10	158	.257	.155	.856	-.351
10	159	-.356	.168	.110	-1.156
10	160	-.299	.164	.167	-1.044
10	161	.020	.113	.508	-.363
10	162	.300	.152	.987	-.172
10	163	.344	.156	.969	-.136
10	164	.251	.172	.793	-.314
10	165	.165	.159	.720	-.449
10	166	-.005	.120	.404	-.416
10	167	-.022	.118	.363	-.404
10	168	.076	.120	.477	-.310
10	169	.208	.117	.628	-.120
10	170	.277	.140	.854	-.137
10	171	.315	.145	1.001	-.122
10	172	.313	.153	1.119	-.169
10	173	.253	.135	.755	-.142
10	174	-.011	.122	.369	-.503
10	175	.089	.117	.498	-.380
10	176	.207	.116	.646	-.183
10	177	.223	.121	.664	-.156
10	178	.240	.137	.731	-.215
10	179	.177	.147	.703	-.255
10	180	.204	.137	.674	-.212
10	181	.040	.096	.405	-.361
10	182	.078	.097	.388	-.274
10	183	.085	.115	.516	-.358
10	184	.144	.107	.555	-.270
10	185	.180	.104	.508	-.143
10	186	.184	.118	.638	-.183
10	187	.135	.131	.670	-.285
10	188	.196	.127	.689	-.224
10	189	.202	.108	.668	-.183
10	190	.167	.117	.624	-.237
10	191	.068	.116	.473	-.338
10	201	-.281	.164	.579	-.924
10	202	-.167	.207	.473	-.723
10	203	-.117	.124	.339	-.514
10	204	-.229	.131	.179	-.635
10	205	-.159	.128	.215	-.562
10	206	-.181	.229	.536	-.952
10	207	-.058	.239	.571	-.940
10	208	.009	.132	.484	-.502
10	209	-.066	.111	.323	-.543
10	210	-.099	.094	.253	-.414
10	211	-.234	.206	.608	-.979
10	212	-.246	.240	.454	-1.074
10	213	.039	.120	.460	-.432
10	214	-.047	.095	.246	-.402
10	215	-.097	.106	.222	-.508
10	216	.054	.196	.801	-.529
10	217	.211	.179	.811	-.408
10	218	.190	.143	.664	-.319
10	219	.451	.187	1.169	-.160
10	220	-.410	.210	.310	-1.516
10	221	-.281	.211	.424	-1.099
10	222	.027	.110	.413	-.377
10	223	-.056	.109	.287	-.514
10	224	-.174	.118	.217	-.661
10	225	.272	.204	1.061	-.444
10	226	.311	.158	.732	-.186
10	227	.309	.177	.911	-.427
10	228	.358	.198	.991	-.368
10	229	-.317	.206	.284	-1.282
10	230	-.242	.172	.356	-.892
10	231	.024	.124	.441	-.435
10	232	-.165	.113	.179	-.594
10	233	-.140	.107	.210	-.565
10	234	.141	.172	.689	-.353
10	235	.179	.188	.744	-.432
10	236	.179	.192	.757	-.471
10	237	.271	.184	.889	-.387
10	238	-.180	.263	.528	-1.511
10	239	-.041	.223	.617	-1.069
10	240	.014	.171	.478	-.885
10	241	-.022	.140	.386	-.596
10	242	.027	.097	.394	-.370

APPENDIX A -- PRESSURE DATA: CONFIGURATION A; HOUSTON NATIONAL BANK

WD	TAP	CPMEAN	CPRMS	CPMAX	CPMIN
10	243	-.066	.103	.368	-.516
10	244	-.182	.112	.191	-.645
10	245	.244	.162	.832	-.247
10	246	.247	.136	.643	-.115
10	247	.360	.169	1.242	-.113
10	248	.253	.181	1.015	-.254
10	249	.301	.169	1.008	-.188
10	250	.318	.174	.889	-.267
10	251	-.097	.161	.498	-.823
10	252	-.185	.188	.545	-1.082
10	253	.058	.146	.468	-.571
10	254	.056	.100	.464	-.274
10	255	.023	.105	.459	-.318
10	256	-.140	.111	.245	-.518
10	257	-.100	.108	.265	-.504
10	258	.236	.151	.793	-.185
10	259	.256	.162	.846	-.256
10	260	.200	.175	.841	-.461
10	261	-.043	.276	.740	-1.257
10	262	.067	.159	.529	-.771
10	263	-.027	.154	.510	-.646
10	264	.045	.117	.450	-.395
10	265	.034	.111	.410	-.339
10	266	-.023	.089	.292	-.343
10	267	-.057	.099	.306	-.423
10	268	-.092	.099	.277	-.449
10	269	.002	.151	.475	-.675
10	270	-.003	.135	.453	-.474
10	271	.065	.118	.409	-.405
10	272	.029	.102	.373	-.375
10	273	.008	.102	.329	-.424
10	274	-.039	.085	.253	-.341
10	275	-.047	.098	.303	-.377
10	276	-.069	.100	.287	-.396
10	277	.047	.102	.399	-.345
10	278	-.012	.098	.316	-.344
10	279	-.021	.109	.317	-.372
10	280	.084	.126	.555	-.437
10	281	.049	.135	.512	-.473
10	282	.096	.117	.644	-.255
10	283	.079	.122	.593	-.327
10	284	.038	.124	.694	-.441
10	285	.028	.113	.548	-.460
10	286	-.027	.095	.313	-.327
10	287	-.036	.106	.337	-.394
10	288	-.061	.106	.304	-.433
10	301	-.203	.130	.192	-.665
10	302	-.246	.107	.178	-.601
10	303	-.199	.112	.250	-.609
10	304	-.214	.111	.217	-.620

WD	TAP	CPMEAN	CPRMS	CPMAX	CPMIN
10	305	-.217	.113	.278	-.598
10	306	-.218	.099	.154	-.606
10	307	-.188	.113	.229	-.655
10	308	-.254	.119	.197	-.765
10	309	-.188	.118	.155	-.695
10	310	-.155	.096	.206	-.444
10	311	-.134	.110	.275	-.458
10	312	-.175	.109	.235	-.495
10	313	-.172	.111	.247	-.501
10	314	-.224	.096	.155	-.532
10	315	-.239	.114	.165	-.606
10	316	-.279	.124	.161	-.649
10	317	-.144	.107	.303	-.509
10	318	-.184	.097	.128	-.517
10	319	-.154	.108	.214	-.537
10	320	-.180	.111	.235	-.584
10	321	-.175	.114	.228	-.580
10	322	-.190	.123	.211	-.792
10	323	-.205	.104	.137	-.552
10	324	-.145	.113	.290	-.570
10	325	-.131	.111	.287	-.646
10	326	-.181	.096	.140	-.522
10	327	-.159	.109	.220	-.512
10	328	-.198	.112	.188	-.555
10	329	-.201	.113	.212	-.589
10	330	-.237	.105	.160	-.637
10	331	-.111	.109	.312	-.545
10	332	-.133	.110	.301	-.567
10	333	-.122	.111	.264	-.563
10	334	-.170	.106	.299	-.511
10	335	-.161	.126	.315	-.555
10	336	-.185	.129	.301	-.634
10	337	-.167	.129	.330	-.609
10	338	-.119	.096	.207	-.471
10	339	-.088	.109	.266	-.497
10	340	-.113	.110	.237	-.561
10	341	-.102	.109	.241	-.478
10	342	-.157	.096	.157	-.508
10	343	-.131	.110	.229	-.521
10	344	-.148	.111	.208	-.532
10	345	-.070	.103	.268	-.494
10	346	-.106	.091	.201	-.464
10	347	-.078	.104	.264	-.515
10	348	-.097	.105	.273	-.547
10	349	-.086	.104	.251	-.530
10	350	-.143	.104	.214	-.528
10	351	-.103	.112	.293	-.483
10	352	-.105	.095	.237	-.517
10	353	-.111	.120	.306	-.531
10	354	-.119	.096	.264	-.495

WD	TAP	CPMEAN	CPRMS	CPMAX	CPMIN
10	355	-.074	.105	.351	-.467
10	356	-.082	.105	.330	-.493
10	357	-.072	.106	.346	-.486
10	358	-.120	.092	.225	-.481
10	359	-.077	.103	.309	-.469
10	360	-.088	.104	.286	-.484
10	361	-.075	.105	.312	-.486
10	362	-.122	.091	.185	-.423
10	401	-.287	.150	.204	-1.088
10	402	-.300	.150	.179	-1.017
10	403	-.223	.133	.183	-1.028
10	404	-.254	.113	.112	-.859
10	405	-.197	.124	.206	-.848
10	406	-.308	.137	.090	-1.119
10	407	-.295	.136	.114	-.906
10	408	-.315	.115	.145	-.765
10	409	-.228	.116	.194	-.712
10	410	-.236	.117	.196	-.754
10	411	-.335	.149	.222	-1.093
10	412	-.380	.119	-.000	-.845
10	413	-.309	.121	.067	-.790
10	414	-.281	.127	.077	-1.072
10	415	-.288	.121	.073	-.715
10	416	-.395	.138	-.000	-1.119
10	417	-.317	.144	.096	-1.088
10	418	-.371	.144	.074	-1.088
10	419	-.411	.157	.182	-1.267
10	420	-.694	.241	-.092	-1.949
10	421	-.095	.187	.733	-.814
10	422	-.250	.154	.277	-.910
10	423	-.548	.226	.112	-1.732
10	424	-.466	.182	.080	-1.278
10	425	-.276	.147	.231	-.994
10	426	-.240	.118	.131	-.745
10	427	-.314	.156	.177	-1.042
10	428	-.402	.149	.045	-.977
10	429	-.387	.180	.164	-1.232
10	430	-.345	.225	.218	-1.601
10	431	-.492	.184	.093	-1.298
10	432	-.403	.134	.070	-.870
10	433	-.315	.144	.185	-.819
10	434	-.344	.148	.130	-.898
10	435	-.346	.146	.095	-1.004
10	436	-.362	.114	.015	-.812
10	437	-.287	.125	.127	-.775
10	438	-.244	.137	.181	-.915
10	439	-.224	.130	.183	-.880
10	440	-.313	.120	.098	-.822
10	441	-.321	.141	.093	-.846
10	442	-.414	.168	.068	-1.163

APPENDIX A -- PRESSURE DATA: CONFIGURATION A; HOUSTON NATIONAL BANK

WD	TAP	CPMEAN	CPRMS	CPMAX	CPMIN
10	443	-.324	.137	.103	-.804
10	444	-.375	.119	.031	-.869
10	445	.111	.164	.791	-.714
10	446	-.423	.326	.496	-2.834
10	447	-.320	.266	.439	-1.631
10	448	-.277	.129	.097	-.857
10	449	-.207	.128	.219	-.705
10	450	-.296	.141	.142	-.933
10	451	-.326	.147	.132	-1.049
10	452	-.369	.131	-.017	-.885
10	453	-.314	.150	.098	-1.385
10	454	-.346	.155	.057	-1.326
10	455	-.454	.247	.275	-1.661
10	456	-.342	.148	.088	-.859
10	457	-.263	.157	.214	-.864
10	458	-.369	.155	.136	-.983
10	459	-.317	.142	.134	-.860
10	460	-.362	.117	.010	-.742
10	461	-.156	.122	.248	-.702
10	462	-.176	.123	.221	-.659
10	463	-.197	.139	.293	-.911
10	464	-.191	.116	.128	-.701
10	465	-.254	.133	.148	-.748
10	466	-.300	.132	.072	-.867
10	467	-.349	.139	.074	-.808
10	468	-.333	.126	.036	-.885
10	469	-.102	.103	.291	-.426
10	470	-.097	.100	.285	-.428
10	471	-.107	.107	.275	-.484
10	472	-.163	.110	.211	-.627
10	473	-.278	.144	.282	-.902
10	474	-.326	.145	.173	-1.076
10	475	-.309	.136	.133	-1.030
10	476	-.281	.116	.083	-.742
10	477	-.073	.110	.331	-.538
10	478	-.069	.100	.309	-.411
10	479	-.076	.100	.294	-.408
10	480	-.098	.089	.217	-.400
10	481	-.137	.111	.251	-.545
10	483	-.302	.156	.266	-.962
10	484	-.316	.149	.088	-.988
10	485	.016	.115	.375	-.391
10	486	.144	.110	.529	-.220
10	501	.034	.105	.450	-.303
10	502	.158	.130	.626	-.317
10	503	-.067	.116	.372	-.442
10	504	.159	.130	.766	-.240
10	505	-.004	.099	.459	-.373
10	506	.121	.112	.562	-.243
10	507	.142	.135	.731	-.363

WD	TAP	CPMEAN	CPRMS	CPMAX	CPMIN
10	508	.143	.116	.588	-.245
10	509	.159	.105	.547	-.132
10	510	-.006	.112	.434	-.360
10	511	.064	.120	.472	-.302
10	512	.132	.119	.592	-.220
10	601	-.028	.218	.678	-.903
10	602	-.224	.124	.139	-.730
10	603	-.176	.107	.180	-.542
10	604	-.159	.121	.294	-.527
10	605	-.062	.106	.325	-.443
10	606	-.025	.166	.553	-.587
10	607	-.159	.121	.247	-.657
10	608	-.132	.114	.252	-.488
10	609	-.044	.179	.529	-.795
10	610	-.220	.120	.167	-.710
10	611	-.134	.115	.244	-.562
10	612	-.151	.114	.227	-.548
10	613	-.062	.105	.313	-.420
10	614	.210	.104	.646	-.118
10	615	.073	.126	.462	-.312
10	701	-.071	.112	.323	-.423
10	702	-.061	.102	.265	-.443
10	703	-.051	.114	.339	-.440
10	704	-.114	.122	.299	-.523
10	705	-.062	.115	.345	-.436
10	706	-.044	.090	.263	-.472
10	707	-.037	.103	.316	-.552
10	708	-.130	.104	.218	-.603
10	709	-.063	.104	.287	-.472
10	710	-.060	.098	.271	-.373
10	711	-.041	.110	.340	-.391
10	712	-.115	.118	.276	-.492
10	801	-.056	.096	.301	-.437
10	802	-.105	.112	.316	-.486
10	803	-.242	.132	.209	-.757
10	804	-.231	.150	.294	-.780
10	805	-.275	.118	.128	-.880
10	806	-.056	.105	.321	-.433
10	807	-.166	.116	.212	-.611
10	808	-.230	.126	.212	-.672
10	809	-.048	.092	.237	-.319
10	810	-.069	.107	.342	-.443
10	811	-.140	.123	.253	-.614
10	812	-.155	.134	.272	-.653
10	813	-.245	.126	.180	-.754
10	814	-.044	.112	.324	-.413
10	815	-.149	.119	.242	-.615
10	816	-.036	.128	.430	-.423
10	817	-.156	.101	.224	-.537
10	818	-.162	.116	.292	-.552

WD	TAP	CPMEAN	CPRMS	CPMAX	CPMIN
10	819	-.122	.110	.242	-.524
10	820	-.073	.107	.297	-.477
10	821	-.009	.108	.401	-.358
10	822	-.106	.124	.330	-.510
10	823	-.192	.131	.223	-.682
10	901	-.125	.109	.261	-.510
10	902	-.065	.105	.303	-.484
10	903	-.062	.091	.242	-.393
10	904	-.050	.106	.266	-.443
10	905	-.205	.115	.201	-.667
10	906	-.177	.117	.205	-.585
10	907	-.144	.102	.231	-.536
10	908	-.174	.130	.283	-.663
10	909	-.217	.125	.241	-.691
10	910	-.014	.160	.538	-.818
10	911	-.137	.113	.254	-.545
10	912	-.228	.159	.260	-.822
10	913	-.327	.137	.160	-.906
10	914	-.080	.221	.681	-.829
10	915	-.075	.195	.504	-.733
20	1	-.400	.160	.151	-.968
20	2	-.429	.150	.088	-.990
20	3	-.294	.173	.154	-1.453
20	4	-.219	.127	.160	-.746
20	5	-.221	.181	.294	-.886
20	6	-.218	.149	.164	-.759
20	7	-.265	.142	.132	-.984
20	8	-.261	.131	.119	-.737
20	9	-.152	.099	.150	-.614
20	10	-.155	.103	.175	-.701
20	11	-.249	.158	.413	-1.050
20	12	-.295	.151	.151	-.890
20	13	-.071	.182	.733	-.801
20	14	.186	.197	.907	-.507
20	15	.267	.200	1.130	-.292
20	16	.028	.211	1.119	-.706
20	17	-.245	.170	.268	-1.005
20	18	-.105	.132	.412	-.763
20	19	.065	.172	.655	-.507
20	20	-.013	.178	.575	-.617
20	21	-.178	.153	.268	-.886
20	22	-.305	.206	.233	-1.455
20	23	.085	.151	.696	-.398
20	24	-.076	.142	.502	-.541
20	25	-.025	.167	.587	-.755
20	26	.208	.147	.707	-.333
20	27	.272	.171	.961	-.204
20	28	.130	.175	.693	-.445
20	29	-.113	.153	.429	-.672
20	30	.024	.140	.586	-.539

APPENDIX A -- PRESSURE DATA: CONFIGURATION A: HOUSTON NATIONAL BANK

WD	TAP	CPMEAN	CPRMS	CPMAX	CPMIN
20	31	.196	.155	.801	-.378
20	32	.056	.170	.731	-.505
20	101	.373	.153	.906	-.075
20	102	.344	.155	.884	-.104
20	103	.469	.169	1.038	-.071
20	104	.304	.145	.827	-.173
20	105	.387	.168	1.074	-.145
20	106	.195	.150	.734	-.277
20	107	.480	.192	1.138	-.084
20	108	.333	.170	1.005	-.235
20	109	.176	.124	.698	-.383
20	110	.165	.163	.843	-.556
20	111	.305	.179	1.050	-.601
20	112	.237	.239	.938	-.921
20	113	.462	.198	1.056	-.467
20	114	.488	.224	1.182	-.714
20	115	.398	.206	.996	-.718
20	116	.439	.195	1.091	-.149
20	117	.281	.143	.834	-.157
20	118	.421	.180	1.193	-.112
20	119	-.136	.208	.559	-.886
20	120	-.124	.187	.561	-.769
20	121	.097	.166	.642	-.467
20	122	.258	.164	.819	-.320
20	123	.383	.192	1.061	-.222
20	124	.279	.196	1.011	-.288
20	125	.128	.208	.848	-.506
20	126	.159	.247	.945	-.706
20	127	-.306	.153	.182	-1.004
20	128	-.266	.154	.239	-.890
20	129	.130	.125	.627	-.230
20	130	.427	.172	1.073	-.103
20	131	.317	.171	.888	-.204
20	132	-.060	.208	.663	-.752
20	133	-.100	.208	.780	-.794
20	134	.094	.134	.602	-.323
20	135	.097	.129	.533	-.373
20	136	.208	.137	.686	-.247
20	137	.360	.137	.835	-.078
20	138	.426	.161	.995	-.063
20	139	.441	.167	1.049	-.030
20	140	.337	.166	.930	-.082
20	141	.182	.148	.771	-.328
20	142	.137	.142	.694	-.388
20	143	.268	.157	.797	-.319
20	144	.297	.181	.809	-.380
20	145	.352	.156	.927	-.072
20	146	.325	.164	.995	-.139
20	147	.234	.151	.852	-.235
20	148	.356	.165	.892	-.156

WD	TAP	CPMEAN	CPRMS	CPMAX	CPMIN
20	149	.283	.127	.705	-.111
20	150	.359	.160	.954	-.182
20	151	.057	.188	.646	-1.031
20	152	-.002	.192	.474	-.870
20	153	.127	.132	.761	-.391
20	154	.277	.154	.978	-.157
20	155	.342	.166	.987	-.075
20	156	.261	.170	.856	-.244
20	157	.255	.182	.842	-.383
20	158	.229	.189	.899	-.497
20	159	-.350	.193	.312	-1.043
20	160	-.277	.186	.408	-1.086
20	161	.092	.122	.561	-.261
20	162	.337	.159	1.013	-.058
20	163	.287	.164	.838	-.146
20	164	.073	.185	.687	-.691
20	165	-.027	.185	.592	-.663
20	166	.070	.131	.472	-.359
20	167	.042	.126	.497	-.363
20	168	.142	.126	.564	-.232
20	169	.293	.138	.787	-.070
20	170	.335	.157	.919	-.084
20	171	.330	.157	.949	-.069
20	172	.236	.152	.901	-.165
20	173	.150	.142	.753	-.240
20	174	.050	.118	.510	-.331
20	175	.140	.117	.562	-.228
20	176	.231	.122	.672	-.158
20	177	.235	.120	.746	-.127
20	178	.236	.136	.756	-.247
20	179	.131	.148	.628	-.389
20	180	.122	.136	.638	-.357
20	181	.051	.103	.434	-.276
20	182	.069	.102	.409	-.292
20	183	.088	.120	.512	-.329
20	184	.141	.112	.532	-.247
20	185	.176	.107	.517	-.160
20	186	.181	.122	.571	-.198
20	187	.136	.135	.649	-.260
20	188	.193	.128	.602	-.176
20	189	.208	.113	.675	-.180
20	190	.154	.122	.641	-.339
20	191	.037	.125	.453	-.478
20	201	-.519	.170	-.052	-1.270
20	202	-.454	.150	.123	-1.108
20	203	-.143	.124	.213	-.817
20	204	-.206	.124	.203	-.643
20	205	-.139	.121	.248	-.566
20	206	-.472	.169	.006	-1.148
20	207	-.429	.200	.181	-1.181

WD	TAP	CPMEAN	CPRMS	CPMAX	CPMIN
20	208	-.251	.209	.260	-1.001
20	209	-.108	.126	.363	-.566
20	210	-.104	.107	.289	-.602
20	211	-.443	.182	.089	-1.173
20	212	-.535	.195	.147	-1.300
20	213	-.197	.183	.328	-.852
20	214	-.085	.100	.258	-.525
20	215	-.103	.109	.285	-.559
20	216	-.161	.164	.325	-.859
20	217	-.043	.173	.582	-.644
20	218	.115	.166	.725	-.425
20	219	.495	.209	1.289	-.151
20	220	-.688	.284	.082	-2.036
20	221	-.550	.255	.266	-1.747
20	222	-.106	.130	.362	-.705
20	223	-.082	.107	.306	-.468
20	224	-.177	.114	.228	-.633
20	225	.084	.164	.759	-.448
20	226	.062	.161	.582	-.494
20	227	.001	.230	.637	-1.077
20	228	.212	.209	1.074	-.597
20	229	-.468	.273	.352	-2.178
20	230	-.337	.208	.202	-1.200
20	231	-.090	.125	.360	-.925
20	232	-.185	.117	.242	-.548
20	233	-.133	.110	.269	-.472
20	234	-.084	.142	.375	-.546
20	235	-.066	.169	.488	-.627
20	236	-.121	.235	.631	-.941
20	237	-.037	.241	.747	-1.069
20	238	-.452	.270	.230	-1.929
20	239	-.286	.209	.435	-1.222
20	240	-.213	.216	.476	-1.190
20	241	-.154	.152	.343	-.781
20	242	-.068	.103	.270	-.445
20	243	-.095	.116	.256	-.530
20	244	-.178	.114	.203	-.581
20	245	.237	.175	.945	-.455
20	246	.245	.147	.700	-.308
20	247	.434	.175	1.035	-.328
20	248	.168	.192	.799	-.711
20	249	.204	.206	.810	-1.009
20	250	.232	.163	.853	-.405
20	251	-.301	.148	.210	-1.040
20	252	-.399	.156	.143	-1.028
20	253	-.211	.172	.345	-1.116
20	254	-.084	.119	.301	-.567
20	255	-.058	.116	.291	-.493
20	256	-.153	.117	.206	-.529
20	257	-.095	.111	.248	-.451

APPENDIX A -- PRESSURE DATA: CONFIGURATION A: HOUSTON NATIONAL BANK

WD	TAP	CPMEAN	CPRMS	CPMAX	CPMIN
20	258	-.006	.163	.588	-.590
20	259	.026	.188	.693	-.595
20	260	-.048	.239	.666	-1.033
20	261	-.323	.227	.523	-1.520
20	262	-.277	.186	.299	-1.315
20	263	-.205	.158	.286	-1.045
20	264	-.115	.128	.300	-.569
20	265	-.069	.113	.330	-.442
20	266	-.092	.099	.230	-.433
20	267	-.075	.113	.310	-.429
20	268	-.109	.115	.265	-.471
20	269	-.167	.153	.344	-.822
20	270	-.190	.142	.233	-.734
20	271	-.028	.141	.413	-.612
20	272	-.054	.115	.330	-.435
20	273	-.055	.114	.335	-.436
20	274	-.095	.098	.259	-.428
20	275	-.065	.111	.335	-.465
20	276	-.092	.114	.321	-.499
20	277	-.018	.113	.344	-.407
20	278	-.065	.098	.256	-.368
20	279	-.066	.113	.298	-.449
20	280	-.019	.151	.444	-.661
20	281	-.011	.149	.425	-.728
20	282	.045	.109	.500	-.323
20	283	.021	.117	.465	-.406
20	284	-.040	.121	.437	-.465
20	285	-.027	.114	.356	-.442
20	286	-.082	.098	.345	-.423
20	287	-.054	.110	.424	-.444
20	288	-.083	.111	.392	-.465
20	301	-.163	.130	.359	-.605
20	302	-.208	.116	.165	-.666
20	303	-.164	.120	.237	-.622
20	304	-.189	.120	.190	-.649
20	305	-.184	.120	.227	-.629
20	306	-.207	.102	.174	-.636
20	307	-.165	.113	.292	-.518
20	308	-.258	.126	.289	-.641
20	309	-.156	.114	.238	-.619
20	310	-.153	.097	.210	-.475
20	311	-.123	.108	.284	-.481
20	312	-.168	.107	.238	-.526
20	313	-.149	.105	.261	-.481
20	314	-.196	.107	.127	-.672
20	315	-.201	.128	.226	-.720
20	316	-.250	.142	.226	-.784
20	317	-.129	.118	.213	-.622
20	318	-.167	.096	.155	-.549
20	319	-.136	.107	.228	-.534
20	320	-.171	.109	.220	-.575
20	321	-.148	.110	.252	-.583
20	322	-.167	.126	.180	-1.364
20	323	-.186	.112	.173	-.663
20	324	-.146	.117	.247	-.826
20	325	-.120	.114	.233	-.656
20	326	-.158	.105	.243	-.495
20	327	-.117	.116	.333	-.493
20	328	-.154	.118	.331	-.563
20	329	-.141	.119	.329	-.559
20	330	-.191	.107	.112	-.538
20	331	-.095	.108	.275	-.478
20	332	-.128	.110	.231	-.505
20	333	-.102	.111	.219	-.556
20	334	-.131	.095	.165	-.482
20	335	-.102	.111	.257	-.511
20	336	-.142	.114	.282	-.557
20	337	-.110	.113	.271	-.543
20	338	-.114	.102	.232	-.470
20	339	-.078	.115	.303	-.487
20	340	-.112	.117	.313	-.541
20	341	-.081	.113	.322	-.482
20	342	-.118	.106	.281	-.497
20	343	-.082	.116	.364	-.510
20	344	-.113	.119	.339	-.565
20	345	-.061	.111	.368	-.421
20	346	-.104	.098	.237	-.446
20	347	-.070	.110	.312	-.456
20	348	-.098	.112	.265	-.490
20	349	-.068	.110	.274	-.457
20	350	-.110	.094	.250	-.460
20	351	-.069	.102	.314	-.453
20	352	-.096	.089	.199	-.399
20	353	-.070	.107	.398	-.556
20	354	-.106	.096	.211	-.405
20	355	-.065	.104	.276	-.389
20	356	-.087	.106	.302	-.490
20	357	-.071	.107	.337	-.468
20	358	-.118	.094	.220	-.462
20	359	-.074	.104	.285	-.436
20	360	-.091	.105	.262	-.478
20	361	-.072	.104	.300	-.450
20	362	-.107	.092	.211	-.458
20	401	-.247	.162	.338	-1.278
20	402	-.265	.151	.367	-.958
20	403	-.279	.163	.207	-1.617
20	404	-.372	.159	.171	-1.094
20	405	-.306	.169	.280	-1.086
20	406	-.353	.176	.155	-1.237
20	407	-.315	.160	.266	-.911
20	408	-.314	.116	.068	-.736
20	409	-.228	.119	.135	-.746
20	410	-.246	.119	.124	-.698
20	411	-.341	.183	.520	-1.085
20	412	-.363	.150	.220	-1.026
20	413	-.325	.140	.194	-.883
20	414	-.316	.141	.110	-1.012
20	415	-.310	.136	.110	-.831
20	416	-.353	.155	.191	-1.231
20	417	-.293	.175	.209	-1.126
20	418	-.387	.165	.122	-1.148
20	419	-.475	.187	.107	-1.358
20	420	-.878	.277	-.155	-2.030
20	421	.130	.224	.805	-1.024
20	422	-.214	.171	.321	-.957
20	423	-.505	.275	.287	-2.043
20	424	-.365	.220	.268	-1.284
20	425	-.183	.133	.231	-.739
20	426	-.216	.120	.140	-.653
20	427	-.240	.147	.170	-.882
20	428	-.370	.164	.065	-1.234
20	429	-.369	.205	.172	-1.776
20	430	-.422	.278	.271	-1.675
20	431	-.448	.226	.201	-1.360
20	432	-.316	.143	.143	-.896
20	433	-.228	.153	.253	-.880
20	434	-.351	.161	.226	-.963
20	435	-.325	.155	.155	-.943
20	436	-.327	.128	.098	-.853
20	437	-.251	.137	.199	-.833
20	438	-.189	.143	.358	-.831
20	439	-.161	.134	.340	-.826
20	440	-.284	.121	.203	-.770
20	441	-.295	.139	.200	-.800
20	442	-.416	.177	.179	-1.138
20	443	-.341	.144	.115	-.878
20	444	-.383	.131	.010	-.959
20	445	.177	.160	.699	-.533
20	446	-.201	.286	.476	-1.949
20	447	-.087	.228	.505	-1.238
20	448	-.226	.135	.180	-.815
20	449	-.188	.133	.300	-.733
20	450	-.268	.154	.245	-.827
20	451	-.294	.165	.167	-1.099
20	452	-.349	.136	.051	-.843
20	453	-.288	.149	.197	-1.116
20	454	-.328	.149	.119	-1.130
20	455	-.371	.286	.409	-1.488
20	456	-.208	.161	.315	-1.236
20	457	-.156	.167	.431	-.950

APPENDIX A -- PRESSURE DATA: CONFIGURATION A; HOUSTON NATIONAL BANK

WD	TAP	CPMEAN	CPRMS	CPMAX	CPMIN
20	458	-.359	.171	.165	-.896
20	459	-.312	.148	.150	-.943
20	460	-.374	.125	.018	-.894
20	461	-.101	.112	.312	-.501
20	462	-.133	.113	.263	-.589
20	463	-.135	.115	.295	-.550
20	464	-.172	.105	.170	-.616
20	465	-.217	.129	.250	-.774
20	466	-.290	.139	.162	-.793
20	467	-.346	.150	.116	-1.041
20	468	-.393	.148	.043	-1.024
20	469	-.091	.116	.353	-.532
20	470	-.084	.113	.334	-.538
20	471	-.095	.116	.294	-.545
20	472	-.153	.109	.198	-.628
20	473	-.199	.140	.248	-.819
20	474	-.244	.146	.216	-.803
20	475	-.247	.137	.229	-.767
20	476	-.276	.122	.134	-.732
20	477	-.067	.105	.293	-.441
20	478	-.054	.105	.319	-.415
20	479	-.068	.104	.301	-.445
20	480	-.114	.091	.258	-.449
20	481	-.106	.112	.311	-.507
20	483	-.202	.180	.600	-.894
20	484	-.275	.158	.156	-1.415
20	485	-.002	.120	.426	-.409
20	486	.146	.110	.485	-.232
20	501	.062	.121	.660	-.329
20	502	.156	.132	.635	-.299
20	503	-.046	.131	.546	-.511
20	504	.146	.128	.602	-.329
20	505	-.009	.102	.351	-.308
20	506	.109	.111	.523	-.238
20	507	.106	.137	.679	-.300
20	508	.138	.117	.585	-.218
20	509	.136	.093	.443	-.175
20	510	-.004	.103	.363	-.365
20	511	.037	.110	.413	-.332
20	512	.120	.107	.461	-.242
20	601	-.021	.186	.586	-.842
20	602	-.160	.113	.250	-.568
20	603	-.147	.106	.206	-.607
20	604	-.168	.119	.288	-.597
20	605	-.061	.104	.312	-.446
20	606	.013	.152	.540	-.649
20	607	-.124	.114	.221	-.522
20	608	-.146	.109	.251	-.513
20	609	-.003	.164	.594	-.931
20	610	-.141	.113	.304	-.675
20	611	-.098	.107	.300	-.469
20	612	-.155	.109	.239	-.502
20	613	-.066	.100	.303	-.398
20	614	.210	.111	.599	-.148
20	615	.106	.129	.486	-.351
20	701	-.062	.106	.304	-.419
20	702	-.074	.095	.310	-.386
20	703	-.050	.107	.366	-.439
20	704	-.137	.115	.312	-.520
20	705	-.067	.111	.358	-.455
20	706	-.074	.095	.253	-.439
20	707	-.052	.107	.341	-.441
20	708	-.151	.117	.248	-.575
20	709	-.068	.114	.338	-.475
20	710	-.075	.091	.274	-.445
20	711	-.051	.102	.319	-.457
20	712	-.144	.110	.250	-.563
20	801	-.072	.092	.238	-.400
20	802	-.094	.107	.245	-.473
20	803	-.224	.126	.150	-.737
20	804	-.178	.154	.312	-.725
20	805	-.301	.129	.151	-1.021
20	806	-.070	.102	.299	-.420
20	807	-.179	.115	.167	-.620
20	808	-.216	.126	.186	-.702
20	809	-.069	.093	.269	-.394
20	810	-.066	.105	.297	-.407
20	811	-.176	.122	.257	-.632
20	812	-.107	.129	.307	-.743
20	813	-.203	.120	.296	-.637
20	814	-.053	.100	.297	-.394
20	815	-.162	.109	.240	-.554
20	816	-.070	.108	.355	-.425
20	817	-.123	.087	.182	-.539
20	818	-.129	.113	.332	-.558
20	819	-.140	.107	.220	-.497
20	820	-.062	.105	.267	-.398
20	821	-.051	.100	.301	-.392
20	822	-.051	.118	.332	-.530
20	823	-.182	.141	.443	-.823
20	901	-.146	.117	.220	-.534
20	902	-.064	.110	.284	-.422
20	903	-.074	.097	.259	-.405
20	904	-.033	.115	.347	-.433
20	905	-.213	.122	.214	-.664
20	906	-.144	.119	.270	-.540
20	907	-.168	.095	.162	-.521
20	908	-.139	.117	.270	-.530
20	909	-.196	.116	.156	-.555
20	910	.032	.144	.556	-1.111
20	911	-.073	.107	.281	-.515
20	912	-.112	.153	.343	-.707
20	913	-.285	.136	.158	-1.064
20	914	-.048	.182	.573	-.746
20	915	.006	.183	.672	-.523
30	1	-.369	.161	.170	-1.006
30	2	-.506	.202	-.036	-1.279
30	3	-.448	.213	.095	-1.508
30	4	-.328	.158	.126	-1.032
30	5	-.414	.183	.352	-1.178
30	6	-.413	.152	.088	-1.088
30	7	-.369	.164	.114	-1.024
30	8	-.371	.165	.137	-.947
30	9	-.302	.183	.222	-1.302
30	10	-.285	.158	.180	-1.065
30	11	-.236	.170	.259	-1.040
30	12	-.312	.208	.271	-1.284
30	13	-.014	.196	.998	-.760
30	14	.343	.181	.956	-.247
30	15	.229	.204	1.221	-.323
30	16	-.164	.178	.679	-.801
30	17	-.162	.161	.436	-.825
30	18	-.035	.134	.443	-.512
30	19	-.117	.155	.420	-.720
30	20	-.203	.172	.366	-.802
30	21	-.116	.163	.471	-.726
30	22	-.151	.181	.357	-1.125
30	23	-.032	.164	.607	-.706
30	24	-.201	.143	.428	-.863
30	25	.057	.168	.787	-.685
30	26	.266	.161	.867	-.270
30	27	.196	.185	.832	-.370
30	28	-.039	.171	.677	-.583
30	29	-.025	.169	.573	-.594
30	30	.158	.132	.753	-.289
30	31	.082	.152	.781	-.530
30	32	-.118	.142	.550	-.709
30	101	.287	.156	.946	-.179
30	102	.341	.171	.888	-.316
30	103	.448	.186	1.110	-.180
30	104	.323	.161	.857	-.285
30	105	.355	.151	.867	-.168
30	106	.271	.144	.730	-.306
30	107	.553	.180	1.197	-.030
30	108	.299	.159	.872	-.297
30	109	.192	.121	.642	-.231
30	110	.213	.142	.732	-.267
30	111	.352	.158	.936	-.240
30	112	.401	.175	1.044	-.322
30	113	.399	.177	1.074	-.302

APPENDIX A -- PRESSURE DATA: CONFIGURATION A; HOUSTON NATIONAL BANK

WD	TAP	CPMEAN	CPRMS	CPMAX	CPMIN
30	114	.371	.179	1.047	-.279
30	115	.256	.164	1.056	-.360
30	116	.311	.163	.913	-.251
30	117	.324	.145	.924	-.083
30	118	.394	.180	1.096	-.123
30	119	.006	.219	.733	-.728
30	120	-.003	.192	.728	-.661
30	121	.183	.168	.869	-.442
30	122	.334	.160	.942	-.218
30	123	.326	.174	.970	-.184
30	124	.223	.194	.965	-.322
30	125	-.027	.202	.653	-.750
30	126	.001	.249	.767	-.919
30	127	-.273	.191	.471	-1.002
30	128	-.226	.188	.470	-.954
30	129	.230	.137	.664	-.211
30	130	.449	.180	1.074	-.015
30	131	.211	.159	.816	-.303
30	132	-.284	.177	.340	-1.085
30	133	-.352	.157	.301	-.901
30	134	.170	.139	.672	-.341
30	135	.149	.135	.637	-.329
30	136	.261	.142	.763	-.231
30	137	.393	.147	.951	-.061
30	138	.429	.168	1.114	-.144
30	139	.404	.168	1.097	-.149
30	140	.245	.153	.934	-.237
30	141	.088	.125	.544	-.315
30	142	.176	.134	.675	-.275
30	143	.313	.146	.839	-.120
30	144	.375	.154	.929	-.031
30	145	.328	.164	.913	-.305
30	146	.292	.166	.954	-.298
30	147	.185	.151	.776	-.366
30	148	.341	.169	.950	-.163
30	149	.348	.149	.850	-.138
30	150	.372	.179	1.036	-.109
30	151	.132	.185	1.024	-.667
30	152	.143	.189	1.108	-.670
30	153	.197	.138	.818	-.274
30	154	.326	.161	.973	-.176
30	155	.308	.162	.898	-.129
30	156	.205	.172	.900	-.328
30	157	.073	.178	.881	-.712
30	158	.101	.193	.884	-.779
30	159	-.177	.201	.559	-1.079
30	160	-.099	.196	.632	-1.019
30	161	.191	.126	.604	-.195
30	162	.350	.166	.945	-.138
30	163	.187	.158	.757	-.313
30	164	-.156	.177	.430	-.854
30	165	-.250	.164	.385	-.873
30	166	.154	.137	.633	-.365
30	167	.114	.136	.582	-.359
30	168	.213	.138	.704	-.285
30	169	.316	.150	.837	-.108
30	170	.359	.176	.942	-.158
30	171	.350	.179	.943	-.186
30	172	.234	.170	.866	-.318
30	173	.036	.116	.514	-.346
30	174	.085	.122	.555	-.298
30	175	.155	.123	.593	-.215
30	176	.214	.125	.675	-.128
30	177	.221	.117	.654	-.100
30	178	.201	.132	.732	-.217
30	179	.055	.142	.641	-.407
30	180	.028	.134	.588	-.435
30	181	.071	.107	.440	-.295
30	182	.082	.098	.396	-.289
30	183	.086	.126	.486	-.336
30	184	.134	.118	.515	-.253
30	185	.172	.110	.654	-.151
30	186	.180	.125	.744	-.179
30	187	.142	.139	.796	-.250
30	188	.191	.132	.779	-.173
30	189	.202	.111	.644	-.129
30	190	.136	.118	.592	-.225
30	191	.007	.120	.359	-.388
30	201	-.580	.167	-.102	-1.372
30	202	-.566	.169	-.093	-1.351
30	203	-.268	.140	.205	-.821
30	204	-.253	.144	.271	-.816
30	205	-.180	.137	.342	-.694
30	206	-.465	.187	.022	-1.273
30	207	-.476	.211	.080	-1.259
30	208	-.474	.204	.172	-1.226
30	209	-.222	.163	.397	-.891
30	210	-.220	.148	.319	-.877
30	211	-.385	.171	.128	-1.172
30	212	-.496	.180	.014	-1.370
30	213	-.422	.185	.172	-1.144
30	214	-.239	.148	.291	-.872
30	215	-.249	.188	.318	-1.193
30	216	-.332	.171	.217	-1.033
30	217	-.253	.165	.403	-.903
30	218	.091	.169	.815	-.592
30	219	.443	.236	1.184	-1.052
30	220	-.857	.275	-.143	-2.248
30	221	-.641	.212	.079	-1.550
30	222	-.390	.177	.071	-1.231
30	223	-.216	.168	.266	-.879
30	224	-.291	.178	.207	-1.158
30	225	-.085	.164	.441	-.812
30	226	-.131	.169	.441	-.899
30	227	-.282	.227	.577	-1.082
30	228	.178	.229	.947	-.814
30	229	-.520	.275	.235	-1.914
30	230	-.376	.185	.124	-1.138
30	231	-.190	.138	.315	-.960
30	232	-.223	.122	.233	-.786
30	233	-.156	.113	.248	-.638
30	234	-.242	.127	.166	-.782
30	235	-.251	.148	.317	-.795
30	236	-.458	.225	.280	-1.451
30	237	-.377	.221	.395	-1.273
30	238	-.438	.199	.047	-1.736
30	239	-.413	.172	.113	-1.057
30	240	-.480	.196	.150	-1.220
30	241	-.293	.146	.322	-.903
30	242	-.210	.124	.230	-.726
30	243	-.168	.128	.213	-.667
30	244	-.232	.135	.242	-.962
30	245	.116	.199	.774	-.599
30	246	.164	.143	.619	-.267
30	247	.439	.197	.986	-.318
30	248	.014	.187	.659	-.699
30	249	.018	.238	.685	-.934
30	250	.140	.156	.758	-.427
30	251	-.340	.157	.094	-1.123
30	252	-.436	.166	.043	-1.228
30	253	-.315	.159	.213	-.923
30	254	-.222	.133	.176	-.841
30	255	-.160	.136	.205	-.845
30	256	-.202	.125	.179	-.705
30	257	-.133	.118	.238	-.617
30	258	-.204	.154	.375	-.819
30	259	-.181	.177	.611	-.887
30	260	-.311	.248	.480	-1.359
30	261	-.389	.202	.124	-1.553
30	262	-.387	.153	.105	-1.171
30	263	-.272	.148	.223	-.924
30	264	-.224	.135	.226	-.770
30	265	-.142	.119	.205	-.589
30	266	-.151	.095	.189	-.497
30	267	-.091	.103	.262	-.485
30	268	-.129	.103	.223	-.521
30	269	-.263	.148	.276	-1.034
30	270	-.319	.141	.146	-1.262
30	271	-.151	.162	.300	-.728
30	272	-.147	.125	.198	-.692

APPENDIX A -- PRESSURE DATA: CONFIGURATION A; HOUSTON NATIONAL BANK

WD	TAP	CPMEAN	CPRMS	CPMAX	CPMIN
30	273	-.107	.114	.250	-.585
30	274	-.142	.095	.178	-.539
30	275	-.088	.102	.274	-.466
30	276	-.124	.104	.245	-.509
30	277	-.072	.109	.372	-.524
30	278	-.112	.102	.210	-.430
30	279	-.092	.119	.278	-.496
30	280	-.122	.172	.531	-.762
30	281	-.172	.164	.327	-.893
30	282	-.039	.127	.433	-.558
30	283	-.021	.120	.425	-.490
30	284	-.092	.120	.369	-.567
30	285	-.066	.117	.352	-.488
30	286	-.116	.094	.188	-.497
30	287	-.075	.104	.247	-.493
30	288	-.115	.105	.220	-.549
30	301	-.197	.130	.182	-.722
30	302	-.231	.113	.144	-.717
30	303	-.179	.118	.196	-.607
30	304	-.228	.127	.237	-.660
30	305	-.198	.122	.201	-.657
30	306	-.233	.116	.183	-.664
30	307	-.158	.115	.275	-.543
30	308	-.240	.137	.277	-.826
30	309	-.189	.135	.292	-.925
30	310	-.222	.125	.127	-.666
30	311	-.169	.130	.207	-.599
30	312	-.197	.120	.195	-.586
30	313	-.155	.115	.262	-.544
30	314	-.194	.097	.094	-.533
30	315	-.164	.120	.204	-.665
30	316	-.212	.133	.165	-.866
30	317	-.156	.115	.178	-.679
30	318	-.201	.107	.133	-.831
30	319	-.154	.111	.207	-.575
30	320	-.189	.111	.173	-.550
30	321	-.152	.109	.218	-.578
30	322	-.159	.119	.255	-.668
30	323	-.187	.105	.111	-.797
30	324	-.175	.119	.254	-.558
30	325	-.134	.112	.273	-.498
30	326	-.182	.100	.292	-.535
30	327	-.126	.110	.382	-.527
30	328	-.164	.113	.344	-.547
30	329	-.131	.111	.297	-.581
30	330	-.170	.108	.221	-.645
30	331	-.114	.116	.306	-.517
30	332	-.157	.118	.261	-.567
30	333	-.115	.117	.289	-.536
30	334	-.148	.098	.169	-.545

WD	TAP	CPMEAN	CPRMS	CPMAX	CPMIN
30	335	-.098	.109	.251	-.579
30	336	-.140	.114	.226	-.645
30	337	-.100	.111	.249	-.602
30	338	-.128	.099	.193	-.436
30	339	-.083	.110	.280	-.423
30	340	-.126	.113	.233	-.487
30	341	-.083	.109	.263	-.427
30	342	-.125	.099	.230	-.435
30	343	-.077	.109	.324	-.427
30	344	-.119	.112	.294	-.469
30	345	-.070	.106	.314	-.408
30	346	-.119	.095	.213	-.442
30	347	-.072	.106	.288	-.447
30	348	-.114	.109	.252	-.487
30	349	-.076	.103	.259	-.445
30	350	-.123	.097	.204	-.471
30	351	-.078	.104	.267	-.457
30	352	-.131	.090	.200	-.440
30	353	-.091	.108	.294	-.462
30	354	-.129	.088	.239	-.465
30	355	-.082	.095	.320	-.442
30	356	-.115	.099	.288	-.485
30	357	-.087	.098	.323	-.454
30	358	-.127	.092	.172	-.443
30	359	-.079	.101	.248	-.408
30	360	-.114	.103	.223	-.461
30	361	-.085	.102	.245	-.443
30	362	-.132	.091	.165	-.411
30	401	-.205	.149	.306	-.917
30	402	-.245	.153	.310	-.771
30	403	-.369	.184	.282	-1.296
30	404	-.567	.195	.003	-1.266
30	405	-.502	.205	.076	-1.318
30	406	-.334	.207	.358	-1.201
30	407	-.277	.181	.385	-1.019
30	408	-.436	.163	.080	-1.181
30	409	-.348	.154	.063	-.957
30	410	-.378	.157	.026	-.981
30	411	-.261	.226	.367	-1.246
30	412	-.268	.158	.190	-1.083
30	413	-.391	.190	.168	-1.102
30	414	-.450	.175	.094	-1.630
30	415	-.466	.182	.010	-1.339
30	416	-.242	.144	.232	-1.079
30	417	-.230	.179	.333	-1.163
30	418	-.403	.212	.195	-1.300
30	419	-.651	.236	.013	-1.701
30	420	-.856	.270	-.206	-2.254
30	421	.367	.200	1.120	-.373
30	422	-.154	.190	.574	-1.349

WD	TAP	CPMEAN	CPRMS	CPMAX	CPMIN
30	423	-.244	.252	.467	-1.518
30	424	-.216	.194	.449	-.940
30	425	-.158	.114	.271	-.574
30	426	-.175	.108	.136	-.831
30	427	-.206	.135	.305	-.882
30	428	-.393	.179	.097	-1.203
30	429	-.432	.246	.197	-1.586
30	430	-.400	.326	.564	-1.747
30	431	-.357	.255	.323	-1.619
30	432	-.240	.150	.302	-.865
30	433	-.168	.155	.338	-.844
30	434	-.338	.195	.511	-1.385
30	435	-.305	.178	.354	-1.035
30	436	-.364	.138	.205	-.790
30	437	-.280	.143	.296	-.770
30	438	-.190	.121	.350	-.724
30	439	-.150	.118	.382	-.611
30	440	-.247	.135	.199	-.754
30	441	-.287	.164	.189	-.897
30	442	-.410	.229	.160	-1.509
30	443	-.428	.192	.272	-1.165
30	444	-.562	.216	.050	-1.632
30	445	.305	.174	.999	-.267
30	446	-.007	.310	.749	-2.670
30	447	.121	.186	.659	-.843
30	448	-.177	.104	.142	-.518
30	449	-.129	.122	.213	-.632
30	450	-.210	.141	.262	-.809
30	451	-.225	.170	.314	-1.172
30	452	-.327	.154	.087	-.981
30	453	-.373	.179	.232	-1.259
30	454	-.429	.176	.199	-1.286
30	455	.007	.228	.801	-.928
30	456	-.042	.159	.477	-.663
30	457	-.019	.172	.566	-.663
30	458	-.239	.205	.388	-.990
30	459	-.246	.168	.319	-.794
30	460	-.318	.170	.200	-.929
30	461	-.097	.110	.306	-.499
30	462	-.143	.110	.258	-.521
30	463	-.124	.109	.299	-.497
30	464	-.168	.104	.206	-.550
30	465	-.189	.136	.259	-.768
30	466	-.276	.159	.297	-.848
30	467	-.327	.206	.365	-.999
30	468	-.480	.196	.187	-1.160
30	469	-.095	.107	.262	-.460
30	470	-.085	.104	.262	-.448
30	471	-.089	.107	.301	-.524
30	472	-.133	.101	.178	-.546

APPENDIX A -- PRESSURE DATA: CONFIGURATION A: HOUSTON NATIONAL BANK

WD	TAP	CPMEAN	CPRMS	CPMAX	CPMIN
30	473	-.133	.140	.267	-.775
30	474	-.173	.177	.300	-.897
30	475	-.254	.164	.342	-.819
30	476	-.272	.129	.210	-.749
30	477	-.084	.105	.308	-.438
30	478	-.061	.109	.274	-.490
30	479	-.070	.108	.254	-.497
30	480	-.119	.100	.208	-.464
30	481	-.079	.118	.301	-.511
30	483	-.080	.195	.610	-.896
30	484	-.190	.193	.291	-1.207
30	485	-.023	.118	.351	-.410
30	486	.143	.119	.653	-.212
30	501	.065	.107	.440	-.330
30	502	.144	.124	.628	-.229
30	503	-.050	.121	.319	-.443
30	504	.131	.128	.615	-.305
30	505	-.007	.105	.331	-.391
30	506	.114	.113	.515	-.294
30	507	.085	.138	.577	-.522
30	508	.151	.120	.553	-.259
30	509	.132	.106	.503	-.268
30	510	.003	.112	.422	-.489
30	511	.020	.121	.429	-.476
30	512	.118	.119	.560	-.370
30	601	-.052	.179	.772	-.753
30	602	-.082	.103	.255	-.476
30	603	-.117	.100	.232	-.527
30	604	-.177	.114	.242	-.626
30	605	-.072	.103	.266	-.426
30	606	-.015	.143	.471	-.608
30	607	-.095	.109	.267	-.502
30	608	-.170	.109	.219	-.569
30	609	-.007	.156	.515	-.665
30	610	-.058	.106	.304	-.394
30	611	-.068	.110	.275	-.445
30	612	-.167	.117	.229	-.609
30	613	-.076	.106	.290	-.466
30	614	.181	.106	.700	-.224
30	615	.104	.113	.478	-.284
30	701	-.091	.106	.298	-.473
30	702	-.099	.100	.248	-.446
30	703	-.063	.109	.319	-.446
30	704	-.180	.120	.233	-.598
30	705	-.076	.112	.319	-.471
30	706	-.099	.092	.278	-.396
30	707	-.070	.102	.309	-.413
30	708	-.179	.110	.208	-.553
30	709	-.080	.106	.328	-.446
30	710	-.092	.089	.245	-.426
30	711	-.068	.099	.289	-.432
30	712	-.180	.110	.231	-.583
30	801	-.108	.094	.195	-.444
30	802	-.107	.106	.239	-.460
30	803	-.220	.121	.172	-.626
30	804	-.084	.131	.316	-.658
30	805	-.241	.161	.258	-.942
30	806	-.090	.103	.229	-.449
30	807	-.219	.120	.143	-.669
30	808	-.164	.150	.434	-.610
30	809	-.106	.093	.319	-.391
30	810	-.087	.106	.397	-.468
30	811	-.245	.123	.316	-.699
30	812	-.082	.107	.364	-.486
30	813	-.140	.146	.427	-.578
30	814	-.077	.107	.273	-.408
30	815	-.208	.119	.185	-.596
30	816	-.108	.116	.316	-.629
30	817	-.126	.091	.137	-.505
30	818	-.158	.122	.239	-.703
30	819	-.181	.111	.160	-.576
30	820	-.081	.107	.257	-.458
30	821	-.090	.101	.266	-.449
30	822	-.051	.112	.359	-.414
30	823	-.210	.146	.449	-.756
30	901	-.193	.111	.200	-.604
30	902	-.083	.103	.298	-.453
30	903	-.095	.092	.228	-.399
30	904	-.036	.106	.368	-.373
30	905	-.269	.127	.188	-.946
30	906	-.122	.103	.267	-.472
30	907	-.191	.101	.125	-.569
30	908	-.103	.115	.314	-.507
30	909	-.182	.120	.250	-.586
30	910	.033	.133	.555	-.371
30	911	-.044	.104	.357	-.418
30	912	-.000	.149	.479	-.590
30	913	-.269	.166	.414	-.949
30	914	-.053	.157	.543	-.680
30	915	.013	.158	.640	-.623
40	1	-.284	.143	.158	-.762
40	2	-.338	.144	.103	-1.064
40	3	-.501	.180	.116	-1.169
40	4	-.445	.161	.141	-1.145
40	5	-.323	.143	.211	-.957
40	6	-.342	.129	.079	-1.064
40	7	-.301	.170	.187	-.974
40	8	-.350	.192	.209	-1.047
40	9	-.411	.158	.065	-1.311
40	10	-.342	.144	.104	-.974
40	11	-.196	.130	.368	-.819
40	12	-.223	.163	.248	-1.049
40	13	.069	.187	.936	-.694
40	14	.367	.185	1.141	-.173
40	15	.139	.198	.929	-.512
40	16	-.201	.171	.517	-.997
40	17	-.020	.176	.723	-.643
40	18	.043	.139	.561	-.500
40	19	-.192	.154	.292	-.796
40	20	-.244	.153	.272	-.852
40	21	-.038	.151	.490	-.544
40	22	.043	.146	.643	-.618
40	23	-.126	.156	.517	-.763
40	24	-.221	.136	.288	-.731
40	25	.156	.151	.703	-.452
40	26	.328	.149	.867	-.131
40	27	.144	.170	.757	-.376
40	28	-.174	.162	.332	-.748
40	29	.114	.154	.700	-.429
40	30	.256	.133	.706	-.176
40	31	-.029	.152	.587	-.573
40	32	-.243	.135	.223	-.689
40	101	.290	.157	.839	-.295
40	102	.411	.177	1.076	-.129
40	103	.488	.190	1.177	-.096
40	104	.402	.171	1.032	-.095
40	105	.272	.144	.854	-.185
40	106	.310	.161	.916	-.228
40	107	.488	.186	1.041	-.153
40	108	.194	.149	.760	-.284
40	109	.267	.144	.767	-.170
40	110	.297	.175	.826	-.387
40	111	.427	.199	1.084	-.348
40	112	.458	.216	1.298	-.221
40	113	.307	.206	.958	-.584
40	114	.334	.188	1.042	-.361
40	115	.218	.172	.886	-.428
40	116	.255	.172	.943	-.238
40	117	.408	.174	1.049	-.142
40	118	.434	.200	1.169	-.177
40	119	.134	.262	.973	-.980
40	120	.118	.246	1.012	-.883
40	121	.218	.174	.839	-.381
40	122	.395	.173	.993	-.094
40	123	.261	.164	.851	-.215
40	124	.116	.172	.825	-.416
40	125	-.136	.169	.449	-.771
40	126	-.121	.205	.638	-.892
40	127	-.117	.236	.712	-.962
40	128	-.054	.220	.666	-.921

APPENDIX A -- PRESSURE DATA: CONFIGURATION A; HOUSTON NATIONAL BANK

WD	TAP	CPMEAN	CPRMS	CPMAX	CPMIN
40	129	.297	.142	.892	-.166
40	130	.431	.194	1.281	-.089
40	131	.137	.164	.739	-.348
40	132	-.318	.154	.258	-1.017
40	133	-.374	.137	.069	-1.067
40	134	.267	.153	.772	-.197
40	135	.230	.150	.832	-.234
40	136	.324	.152	.860	-.135
40	137	.398	.145	.934	.010
40	138	.399	.163	1.036	-.052
40	139	.345	.159	.972	-.091
40	140	.170	.141	.702	-.238
40	141	.013	.124	.481	-.389
40	142	.242	.145	.817	-.179
40	143	.373	.157	.972	-.075
40	144	.432	.167	1.053	-.081
40	145	.198	.188	.721	-.541
40	146	.210	.164	.761	-.347
40	147	.110	.146	.719	-.385
40	148	.243	.177	.811	-.293
40	149	.357	.173	.902	-.375
40	150	.356	.187	1.056	-.122
40	151	.201	.170	.812	-.512
40	152	.262	.178	.935	-.433
40	153	.264	.139	.766	-.150
40	154	.364	.172	.953	-.196
40	155	.273	.163	.758	-.189
40	156	.155	.164	.693	-.412
40	157	-.077	.165	.518	-.765
40	158	-.012	.187	.642	-.833
40	159	.018	.187	.613	-.797
40	160	.092	.185	.669	-.705
40	161	.284	.150	.839	-.190
40	162	.346	.168	.950	-.149
40	163	.088	.133	.566	-.354
40	164	-.338	.159	.199	-.964
40	165	-.437	.144	.117	-1.040
40	166	.244	.158	.916	-.237
40	167	.186	.149	.804	-.333
40	168	.258	.152	.912	-.235
40	169	.298	.159	.817	-.145
40	170	.308	.172	.869	-.168
40	171	.268	.166	.818	-.187
40	172	.108	.146	.622	-.324
40	173	-.052	.120	.414	-.442
40	174	.091	.122	.650	-.298
40	175	.140	.125	.681	-.273
40	176	.175	.133	.614	-.329
40	177	.166	.118	.607	-.208
40	178	.138	.131	.606	-.289
40	179	-.008	.132	.451	-.479
40	180	-.036	.121	.370	-.484
40	181	.105	.094	.469	-.254
40	182	.069	.103	.500	-.265
40	183	.082	.123	.691	-.357
40	184	.125	.116	.708	-.277
40	185	.162	.099	.515	-.178
40	186	.161	.115	.564	-.236
40	187	.128	.130	.595	-.312
40	188	.170	.128	.595	-.218
40	189	.178	.115	.737	-.180
40	190	.077	.120	.553	-.350
40	191	-.080	.120	.342	-.512
40	201	-.397	.157	.039	-1.000
40	202	-.380	.152	.102	-.931
40	203	-.299	.158	.257	-1.094
40	204	-.283	.157	.262	-.953
40	205	-.216	.155	.326	-.858
40	206	-.273	.130	.076	-.943
40	207	-.295	.146	.217	-1.114
40	208	-.372	.150	.114	-1.161
40	209	-.308	.155	.352	-.948
40	210	-.283	.144	.205	-.862
40	211	-.284	.142	.182	-.963
40	212	-.375	.148	.117	-1.194
40	213	-.334	.150	.141	-1.051
40	214	-.336	.148	.188	-.976
40	215	-.361	.190	.279	-1.228
40	216	-.436	.184	.149	-1.133
40	217	-.369	.165	.116	-1.061
40	218	-.091	.214	.546	-.755
40	219	.147	.420	1.349	-1.557
40	220	-.894	.318	-.080	-2.211
40	221	-.578	.190	.014	-1.613
40	222	-.390	.132	-.003	-.837
40	223	-.315	.165	.236	-.997
40	224	-.393	.183	.295	-1.096
40	225	-.155	.142	.261	-.634
40	226	-.258	.132	.179	-.862
40	227	-.472	.203	.177	-1.323
40	228	.037	.205	.754	-.758
40	229	-.456	.213	.151	-1.412
40	230	-.374	.166	.086	-1.061
40	231	-.292	.163	.269	-1.052
40	232	-.303	.144	.131	-.996
40	233	-.237	.134	.177	-.817
40	234	-.253	.116	.173	-.768
40	235	-.278	.135	.210	-.747
40	236	-.484	.175	.098	-1.212
40	237	-.371	.183	.246	-1.514
40	238	-.341	.130	-.016	-1.314
40	239	-.353	.146	.024	-1.122
40	240	-.491	.174	-.041	-1.512
40	241	-.329	.132	.088	-.859
40	242	-.253	.113	.133	-.719
40	243	-.236	.140	.215	-.763
40	244	-.288	.148	.171	-.917
40	245	-.065	.202	.552	-.893
40	246	.047	.159	.456	-.561
40	247	.233	.238	.974	-.473
40	248	-.207	.192	.408	-.976
40	249	-.286	.288	.631	-2.118
40	250	.068	.154	.656	-.539
40	251	-.309	.136	.058	-.996
40	252	-.386	.141	-.014	-1.045
40	253	-.331	.132	.020	-.823
40	254	-.322	.122	.138	-.921
40	255	-.283	.133	.216	-.884
40	256	-.311	.134	.125	-.974
40	257	-.246	.136	.172	-.968
40	258	-.315	.120	.130	-.709
40	259	-.324	.138	.198	-.806
40	260	-.489	.199	.220	-1.434
40	261	-.381	.145	.098	-1.097
40	262	-.419	.128	-.029	-1.168
40	263	-.306	.128	.195	-.843
40	264	-.308	.125	.123	-.834
40	265	-.219	.116	.227	-.749
40	266	-.239	.107	.135	-.689
40	267	-.153	.111	.233	-.552
40	268	-.200	.111	.169	-.586
40	269	-.295	.124	.121	-.872
40	270	-.348	.116	.041	-.890
40	271	-.265	.139	.195	-.777
40	272	-.246	.126	.176	-.663
40	273	-.160	.117	.248	-.594
40	274	-.178	.101	.214	-.551
40	275	-.103	.107	.302	-.499
40	276	-.147	.110	.271	-.567
40	277	-.092	.118	.351	-.501
40	278	-.152	.097	.179	-.472
40	279	-.121	.110	.213	-.490
40	280	-.235	.155	.290	-.981
40	281	-.228	.167	.261	-.879
40	282	-.091	.131	.336	-.752
40	283	-.050	.110	.415	-.431
40	284	-.127	.112	.303	-.458
40	285	-.090	.109	.381	-.412
40	286	-.154	.096	.132	-.512
40	287	-.093	.106	.217	-.490

APPENDIX A -- PRESSURE DATA: CONFIGURATION A; HOUSTON NATIONAL BANK

WD	TAP	CPMEAN	CPRMS	CPMAX	CPMIN
40	288	-.138	.108	.178	-.547
40	301	-.207	.129	.228	-.700
40	302	-.255	.107	.130	-.671
40	303	-.196	.116	.185	-.667
40	304	-.271	.118	.080	-.774
40	305	-.203	.119	.155	-.668
40	306	-.294	.104	.068	-.671
40	307	-.184	.103	.179	-.561
40	308	-.255	.116	.138	-.734
40	309	-.250	.129	.256	-.687
40	310	-.302	.118	.100	-.691
40	311	-.223	.120	.202	-.626
40	312	-.237	.109	.138	-.658
40	313	-.177	.106	.183	-.599
40	314	-.221	.090	.081	-.564
40	315	-.157	.099	.175	-.523
40	316	-.205	.105	.137	-.639
40	317	-.207	.123	.187	-.723
40	318	-.252	.112	.117	-.780
40	319	-.192	.108	.169	-.626
40	320	-.225	.109	.124	-.643
40	321	-.174	.106	.205	-.653
40	322	-.174	.108	.223	-.541
40	323	-.187	.099	.151	-.496
40	324	-.249	.115	.286	-.630
40	325	-.188	.107	.275	-.539
40	326	-.215	.097	.069	-.582
40	327	-.153	.106	.181	-.496
40	328	-.201	.109	.128	-.602
40	329	-.152	.106	.177	-.544
40	330	-.190	.101	.173	-.551
40	331	-.160	.115	.275	-.568
40	332	-.208	.116	.221	-.620
40	333	-.152	.111	.232	-.522
40	334	-.185	.096	.162	-.467
40	335	-.124	.105	.237	-.459
40	336	-.174	.109	.193	-.531
40	337	-.126	.105	.228	-.460
40	338	-.178	.096	.176	-.522
40	339	-.127	.105	.264	-.514
40	340	-.178	.108	.185	-.575
40	341	-.121	.102	.260	-.518
40	342	-.157	.092	.199	-.446
40	343	-.105	.101	.301	-.427
40	344	-.158	.105	.256	-.493
40	345	-.106	.100	.304	-.415
40	346	-.139	.088	.162	-.455
40	347	-.091	.097	.183	-.425
40	348	-.145	.101	.139	-.491
40	349	-.105	.098	.162	-.500

WD	TAP	CPMEAN	CPRMS	CPMAX	CPMIN
40	350	-.156	.096	.144	-.474
40	351	-.106	.103	.230	-.432
40	352	-.168	.088	.075	-.456
40	353	-.129	.109	.211	-.456
40	354	-.157	.092	.149	-.479
40	355	-.107	.098	.258	-.452
40	356	-.144	.099	.190	-.486
40	357	-.104	.097	.232	-.446
40	358	-.149	.102	.165	-.477
40	359	-.099	.110	.243	-.457
40	360	-.147	.114	.208	-.511
40	361	-.109	.113	.239	-.476
40	362	-.156	.100	.167	-.511
40	401	-.176	.131	.268	-.693
40	402	-.213	.136	.280	-.808
40	403	-.248	.182	.255	-1.017
40	404	-.650	.210	.024	-1.432
40	405	-.654	.217	.001	-1.752
40	406	-.245	.147	.213	-1.314
40	407	-.190	.150	.446	-.998
40	408	-.357	.202	.172	-1.180
40	409	-.524	.186	.143	-1.377
40	410	-.587	.188	.014	-1.419
40	411	-.165	.125	.286	-.835
40	412	-.188	.123	.265	-.721
40	413	-.303	.221	.260	-1.324
40	414	-.540	.188	.096	-1.655
40	415	-.581	.188	.046	-1.404
40	416	-.208	.108	.172	-.673
40	417	-.137	.122	.279	-.733
40	418	-.291	.187	.277	-1.358
40	419	-.621	.257	.343	-1.779
40	420	-.734	.248	-.067	-1.887
40	421	.369	.191	1.036	-.348
40	422	-.040	.210	.610	-.930
40	423	-.000	.242	.672	-1.205
40	424	-.022	.200	.688	-.864
40	425	-.169	.107	.216	-.505
40	426	-.150	.097	.235	-.460
40	427	-.159	.118	.278	-.564
40	428	-.436	.202	.108	-1.330
40	429	-.506	.281	.196	-1.949
40	430	-.198	.355	.819	-1.833
40	431	-.155	.267	.663	-1.468
40	432	-.107	.154	.426	-.662
40	433	-.063	.156	.473	-.612
40	434	-.160	.223	.510	-.959
40	435	-.146	.197	.527	-1.215
40	436	-.264	.155	.329	-.801
40	437	-.194	.155	.460	-.754

WD	TAP	CPMEAN	CPRMS	CPMAX	CPMIN
40	438	-.217	.106	.140	-.603
40	439	-.158	.102	.173	-.537
40	440	-.216	.120	.218	-.652
40	441	-.254	.163	.330	-.937
40	442	-.333	.263	.336	-1.465
40	443	-.406	.245	.378	-1.422
40	444	-.686	.305	.150	-2.172
40	445	.344	.175	.927	-.168
40	446	.189	.213	.861	-1.090
40	447	.248	.172	.901	-.318
40	448	-.198	.108	.214	-.542
40	449	-.123	.113	.430	-.542
40	450	-.174	.123	.379	-.609
40	451	-.140	.145	.323	-.709
40	452	-.279	.165	.157	-1.078
40	453	-.354	.177	.312	-1.123
40	454	-.422	.166	.176	-1.168
40	455	.140	.202	.821	-.757
40	456	.074	.157	.640	-.497
40	457	.092	.176	.737	-.645
40	458	-.103	.215	.705	-.967
40	459	-.128	.218	.603	-.954
40	460	-.189	.205	.460	-.881
40	461	-.131	.108	.198	-.496
40	462	-.185	.110	.146	-.572
40	463	-.134	.107	.216	-.514
40	464	-.132	.093	.210	-.460
40	465	-.136	.123	.342	-.608
40	466	-.244	.165	.361	-.896
40	467	-.209	.230	.422	-1.126
40	468	-.340	.228	.311	-1.250
40	469	-.112	.103	.274	-.528
40	470	-.099	.099	.275	-.490
40	471	-.095	.100	.284	-.475
40	472	-.111	.091	.170	-.460
40	473	-.087	.117	.306	-.534
40	474	-.096	.147	.407	-.688
40	475	-.195	.171	.450	-.809
40	476	-.198	.146	.317	-.812
40	477	-.103	.101	.180	-.432
40	478	-.074	.104	.272	-.407
40	479	-.073	.103	.250	-.413
40	480	-.099	.092	.175	-.386
40	481	-.051	.108	.268	-.393
40	483	.023	.145	.394	-.642
40	484	-.084	.170	.352	-.903
40	485	-.045	.133	.426	-.482
40	486	.126	.122	.495	-.254
40	501	.096	.103	.463	-.267
40	502	.095	.120	.504	-.329

APPENDIX A -- PRESSURE DATA: CONFIGURATION A; HOUSTON NATIONAL BANK

WD	TAP	CPMEAN	CPRMS	CPMAX	CPMIN
40	503	.038	.111	.431	-.334
40	504	.097	.122	.517	-.322
40	505	.013	.099	.368	-.309
40	506	.068	.106	.464	-.295
40	507	.102	.119	.521	-.303
40	508	.112	.117	.523	-.264
40	509	.132	.098	.497	-.180
40	510	-.006	.116	.438	-.417
40	511	.075	.107	.521	-.274
40	512	.095	.112	.549	-.267
40	601	-.019	.135	.543	-.534
40	602	-.032	.108	.315	-.391
40	603	-.097	.103	.257	-.443
40	604	-.101	.108	.214	-.469
40	605	-.101	.109	.265	-.465
40	606	.022	.126	.533	-.531
40	607	-.104	.115	.249	-.597
40	608	-.127	.111	.234	-.519
40	609	.023	.145	.500	-.713
40	610	-.011	.105	.406	-.345
40	611	-.071	.113	.359	-.420
40	612	-.088	.108	.279	-.448
40	613	-.092	.105	.235	-.446
40	614	.169	.111	.653	-.184
40	615	.072	.125	.471	-.409
40	701	-.141	.110	.234	-.598
40	702	-.122	.096	.261	-.466
40	703	-.127	.110	.254	-.519
40	704	-.144	.110	.225	-.534
40	705	-.105	.110	.281	-.499
40	706	-.122	.090	.234	-.429
40	707	-.133	.104	.293	-.490
40	708	-.116	.105	.312	-.476
40	709	-.098	.108	.333	-.468
40	710	-.095	.091	.204	-.426
40	711	-.118	.103	.233	-.496
40	712	-.130	.104	.219	-.534
40	801	-.109	.095	.249	-.430
40	802	-.137	.113	.362	-.493
40	803	-.123	.114	.259	-.521
40	804	-.047	.124	.402	-.440
40	805	-.061	.166	.427	-.713
40	806	-.125	.109	.259	-.487
40	807	-.135	.113	.214	-.582
40	808	-.061	.169	.535	-.586
40	809	-.120	.097	.210	-.445
40	810	-.120	.111	.222	-.480
40	811	-.179	.121	.224	-.589
40	812	-.083	.112	.259	-.477
40	813	-.090	.140	.428	-.615

WD	TAP	CPMEAN	CPRMS	CPMAX	CPMIN
40	814	-.130	.108	.217	-.489
40	815	-.132	.111	.257	-.503
40	816	-.125	.118	.327	-.566
40	817	-.113	.096	.182	-.430
40	818	-.169	.141	.299	-.869
40	819	-.131	.108	.230	-.493
40	820	-.099	.112	.265	-.512
40	821	-.095	.101	.231	-.444
40	822	-.062	.112	.300	-.517
40	823	-.081	.163	.575	-.625
40	901	-.139	.114	.269	-.553
40	902	-.115	.113	.247	-.512
40	903	-.103	.092	.212	-.502
40	904	-.062	.112	.320	-.517
40	905	-.188	.116	.193	-.736
40	906	-.124	.109	.263	-.604
40	907	-.221	.114	.153	-.732
40	908	-.101	.114	.276	-.486
40	909	-.074	.110	.295	-.448
40	910	.057	.149	.729	-.386
40	911	.016	.110	.458	-.364
40	912	.080	.140	.519	-.631
40	913	-.038	.196	.639	-.640
40	914	-.015	.144	.481	-.694
40	915	.032	.145	.602	-.609
50	1	-.285	.124	.118	-.735
50	2	-.288	.109	.047	-1.015
50	3	-.400	.185	.205	-1.294
50	4	-.384	.184	.281	-1.227
50	5	-.319	.122	.079	-.870
50	6	-.313	.103	.019	-.681
50	7	-.142	.130	.262	-.665
50	8	-.147	.154	.249	-1.012
50	9	-.391	.130	-.028	-1.047
50	10	-.339	.118	-.019	-.815
50	11	-.208	.111	.152	-.600
50	12	-.192	.109	.157	-.731
50	13	.237	.170	.811	-.489
50	14	.343	.172	1.216	-.137
50	15	.010	.187	.819	-.595
50	16	-.196	.159	.597	-.739
50	17	.128	.171	.876	-.466
50	18	.153	.142	.729	-.361
50	19	-.239	.162	.315	-.818
50	20	-.253	.149	.278	-.818
50	21	.081	.158	.682	-.463
50	22	.186	.126	.653	-.270
50	23	-.280	.167	.402	-.933
50	24	-.279	.141	.164	-.810
50	25	.288	.157	.961	-.245

WD	TAP	CPMEAN	CPRMS	CPMAX	CPMIN
50	26	.322	.155	.866	-.113
50	27	.068	.177	.791	-.640
50	28	-.216	.163	.544	-.973
50	29	.214	.158	.898	-.372
50	30	.294	.146	.843	-.102
50	31	-.140	.135	.341	-.646
50	32	-.306	.133	.165	-.772
50	101	.197	.136	.652	-.243
50	102	.418	.167	.987	-.163
50	103	.421	.164	1.096	-.117
50	104	.428	.160	1.007	-.121
50	105	.184	.136	.752	-.286
50	106	.379	.172	.915	-.174
50	107	.423	.178	1.077	-.129
50	108	.072	.151	.613	-.460
50	109	.320	.163	.987	-.190
50	110	.339	.189	1.062	-.552
50	111	.432	.206	1.274	-.508
50	112	.403	.199	1.103	-.299
50	113	-.140	.246	.755	-1.084
50	114	.090	.247	1.082	-.913
50	115	.038	.214	.877	-.690
50	116	.112	.170	.731	-.460
50	117	.410	.162	.963	-.116
50	118	.369	.172	.927	-.178
50	119	.310	.198	1.130	-.829
50	120	.348	.202	1.308	-.787
50	121	.306	.155	.816	-.193
50	122	.431	.170	.993	-.083
50	123	.162	.157	.799	-.304
50	124	.008	.158	.591	-.474
50	125	-.266	.135	.281	-.755
50	126	-.258	.163	.384	-.829
50	127	.162	.207	.939	-.624
50	128	.213	.209	.925	-.595
50	129	.382	.150	.924	-.067
50	130	.393	.174	.941	-.086
50	131	.046	.141	.534	-.379
50	132	-.305	.155	.203	-.897
50	133	-.373	.133	.021	-.962
50	134	.368	.172	1.042	-.204
50	135	.337	.171	.913	-.180
50	136	.406	.172	.956	-.144
50	137	.401	.161	.934	-.032
50	138	.353	.177	.958	-.132
50	139	.271	.172	.917	-.229
50	140	.084	.152	.738	-.384
50	141	-.065	.118	.378	-.422
50	142	.283	.157	.898	-.200
50	143	.370	.161	1.036	-.141

APPENDIX A -- PRESSURE DATA: CONFIGURATION A; HOUSTON NATIONAL BANK

WD	TAP	CPMEAN	CPRMS	CPMAX	CPMIN
50	144	.401	.163	1.080	-.073
50	145	-.096	.237	.564	-1.128
50	146	.126	.148	.617	-.522
50	147	.040	.129	.507	-.465
50	148	.078	.166	.625	-.633
50	149	.249	.200	.792	-.512
50	150	.264	.183	.851	-.308
50	151	.234	.162	.857	-.276
50	152	.305	.173	.935	-.230
50	153	.334	.146	.907	-.086
50	154	.292	.202	1.002	-.405
50	155	.137	.149	.645	-.308
50	156	.062	.160	.634	-.454
50	157	-.188	.160	.300	-.858
50	158	-.110	.181	.479	-.889
50	159	.195	.170	.832	-.616
50	160	.265	.172	1.074	-.376
50	161	.279	.154	.748	-.321
50	162	.251	.160	.876	-.243
50	163	-.018	.132	.528	-.423
50	164	-.379	.159	.185	-.980
50	165	-.474	.148	-.024	-1.261
50	166	.281	.160	.802	-.248
50	167	.234	.153	.797	-.264
50	168	.259	.148	.767	-.168
50	169	.245	.158	.804	-.177
50	170	.235	.174	.859	-.229
50	171	.186	.170	.772	-.270
50	172	.031	.149	.578	-.367
50	173	-.132	.117	.266	-.523
50	174	.095	.122	.508	-.446
50	175	.114	.115	.538	-.279
50	176	.111	.120	.638	-.279
50	177	.114	.121	.612	-.243
50	178	.091	.137	.650	-.313
50	179	-.054	.140	.483	-.539
50	180	-.085	.129	.408	-.540
50	181	.064	.095	.384	-.267
50	182	.044	.098	.491	-.312
50	183	.033	.114	.402	-.365
50	184	.077	.108	.418	-.307
50	185	.095	.095	.422	-.255
50	186	.101	.110	.493	-.297
50	187	.066	.120	.529	-.353
50	188	.103	.120	.545	-.317
50	189	.095	.107	.469	-.248
50	190	.010	.118	.421	-.369
50	191	-.134	.118	.290	-.529
50	201	-.289	.126	.155	-.748
50	202	-.300	.118	.053	-.679
50	203	-.306	.156	.152	-.938
50	204	-.328	.161	.148	-1.085
50	205	-.282	.172	.202	-.988
50	206	-.253	.101	.105	-.659
50	207	-.259	.112	.154	-.741
50	208	-.349	.124	.084	-.818
50	209	-.346	.141	.175	-.947
50	210	-.321	.134	.065	-1.031
50	211	-.297	.131	.091	-.789
50	212	-.377	.136	.015	-.866
50	213	-.334	.131	.010	-.807
50	214	-.349	.122	-.008	-.881
50	215	-.350	.142	.031	-.991
50	216	-.557	.191	.110	-1.437
50	217	-.487	.176	.134	-1.207
50	218	-.279	.160	.449	-.859
50	219	-.217	.306	1.163	-1.390
50	220	-.763	.263	-.092	-1.968
50	221	-.509	.177	.045	-1.210
50	222	-.409	.126	.143	-.985
50	223	-.370	.141	.228	-.989
50	224	-.443	.152	.169	-1.057
50	225	-.293	.152	.256	-.857
50	226	-.382	.146	.144	-1.136
50	227	-.496	.188	.017	-1.262
50	228	-.113	.198	.619	-.757
50	229	-.447	.205	.262	-1.396
50	230	-.362	.155	.131	-1.005
50	231	-.299	.158	.262	-.950
50	232	-.337	.146	.108	-.976
50	233	-.282	.143	.112	-.995
50	234	-.295	.129	.150	-.723
50	235	-.318	.147	.213	-.798
50	236	-.481	.171	.123	-1.031
50	237	-.365	.185	.187	-1.321
50	238	-.303	.115	.179	-.717
50	239	-.318	.132	.222	-.824
50	240	-.470	.165	.114	-1.283
50	241	-.324	.132	.261	-.861
50	242	-.273	.101	.097	-.676
50	243	-.288	.129	.112	-.873
50	244	-.353	.144	.091	-1.107
50	245	-.255	.177	.236	-1.216
50	246	-.096	.190	.389	-.738
50	247	-.109	.216	.801	-.962
50	248	-.445	.210	.247	-1.440
50	249	-.575	.303	.318	-1.934
50	250	-.004	.137	.500	-.540
50	251	-.302	.119	.067	-.749
50	252	-.374	.124	.009	-.807
50	253	-.324	.122	.066	-.770
50	254	-.321	.113	.012	-.861
50	255	-.323	.130	.055	-1.115
50	256	-.372	.131	.021	-1.045
50	257	-.314	.134	.090	-1.207
50	258	-.380	.120	.027	-.803
50	259	-.412	.138	.032	-.988
50	260	-.575	.206	.065	-1.441
50	261	-.427	.137	-.028	-1.231
50	262	-.331	.122	.029	-.938
50	263	-.374	.128	.008	-.841
50	264	-.334	.127	.062	-.765
50	265	-.324	.130	.094	-.780
50	266	-.182	.103	.264	-.687
50	267	-.225	.120	.212	-.707
50	268	-.229	.119	.176	-.710
50	269	-.344	.132	.069	-.796
50	270	-.228	.096	.123	-.569
50	271	-.315	.128	.090	-.801
50	272	-.258	.116	.104	-.637
50	273	-.223	.118	.126	-.626
50	274	-.103	.093	.190	-.459
50	275	-.160	.111	.204	-.558
50	276	-.166	.111	.219	-.571
50	277	-.152	.121	.243	-.628
50	278	-.070	.089	.287	-.401
50	279	-.160	.111	.270	-.557
50	280	-.292	.143	.158	-.888
50	281	-.311	.163	.206	-1.019
50	282	-.024	.125	.369	-.537
50	283	-.094	.112	.288	-.479
50	284	-.129	.111	.251	-.518
50	285	-.154	.109	.251	-.552
50	286	-.066	.089	.273	-.410
50	287	-.108	.105	.260	-.510
50	288	-.109	.103	.251	-.502
50	301	-.260	.127	.138	-.841
50	302	-.161	.096	.165	-.552
50	303	-.227	.113	.153	-.702
50	304	-.251	.111	.124	-.699
50	305	-.257	.117	.104	-.764
50	306	-.211	.087	.094	-.569
50	307	-.240	.104	.133	-.658
50	308	-.248	.107	.151	-.685
50	309	-.287	.113	.063	-.730
50	310	-.239	.107	.091	-.613
50	311	-.288	.123	.093	-.735
50	312	-.249	.113	.116	-.662
50	313	-.252	.114	.109	-.681
50	314	-.150	.095	.176	-.488

APPENDIX A -- PRESSURE DATA: CONFIGURATION A: HOUSTON NATIONAL BANK

WD	TAP	CPMEAN	CPRMS	CPMAX	CPMIN
50	315	-.198	.115	.196	-.625
50	316	-.198	.117	.199	-.641
50	317	-.263	.130	.211	-.892
50	318	-.163	.095	.117	-.674
50	319	-.221	.107	.127	-.625
50	320	-.222	.107	.138	-.607
50	321	-.234	.108	.149	-.625
50	322	-.211	.102	.153	-.579
50	323	-.217	.095	.092	-.547
50	324	-.255	.119	.103	-.724
50	325	-.254	.116	.109	-.703
50	326	-.157	.086	.166	-.460
50	327	-.214	.105	.176	-.554
50	328	-.216	.105	.154	-.571
50	329	-.223	.106	.139	-.565
50	330	-.139	.087	.247	-.464
50	331	-.238	.114	.236	-1.021
50	332	-.236	.112	.225	-.719
50	333	-.239	.112	.224	-.686
50	334	-.141	.088	.134	-.425
50	335	-.191	.107	.149	-.508
50	336	-.190	.108	.193	-.515
50	337	-.203	.110	.171	-.534
50	338	-.145	.090	.148	-.511
50	339	-.204	.110	.152	-.662
50	340	-.205	.109	.152	-.692
50	341	-.207	.110	.164	-.716
50	342	-.123	.088	.232	-.474
50	343	-.173	.107	.222	-.598
50	344	-.178	.107	.212	-.607
50	345	-.188	.108	.187	-.702
50	346	-.104	.091	.222	-.397
50	347	-.161	.111	.212	-.520
50	348	-.172	.113	.188	-.539
50	349	-.193	.114	.170	-.623
50	350	-.230	.098	.163	-.567
50	351	-.171	.103	.241	-.570
50	352	-.260	.104	.036	-.677
50	353	-.239	.138	.227	-.901
50	354	-.209	.107	.121	-.640
50	355	-.151	.113	.205	-.593
50	356	-.150	.115	.220	-.589
50	357	-.103	.113	.250	-.529
50	358	-.171	.098	.116	-.567
50	359	-.123	.107	.197	-.545
50	360	-.188	.112	.138	-.616
50	361	-.141	.111	.187	-.553
50	362	-.185	.094	.125	-.533
50	401	-.184	.110	.131	-.565
50	402	-.207	.113	.126	-.671
50	403	-.099	.136	.279	-.807
50	404	-.405	.247	.241	-1.201
50	405	-.515	.249	.382	-1.225
50	406	-.240	.118	.126	-.637
50	407	-.157	.116	.200	-.637
50	408	-.202	.159	.285	-.921
50	409	-.439	.237	.451	-1.240
50	410	-.538	.219	.280	-1.345
50	411	-.183	.119	.259	-.668
50	412	-.199	.102	.196	-.507
50	413	-.098	.150	.434	-.825
50	414	-.435	.201	.186	-1.339
50	415	-.499	.214	.447	-1.527
50	416	-.228	.095	.108	-.575
50	417	-.122	.110	.282	-.547
50	418	-.175	.136	.317	-.827
50	419	-.457	.249	.217	-1.329
50	420	-.628	.246	.058	-2.047
50	421	.401	.176	1.446	-.304
50	422	.123	.206	.774	-.847
50	423	.213	.172	.821	-.671
50	424	.160	.206	.973	-.642
50	425	-.189	.101	.130	-.580
50	426	-.161	.092	.092	-.487
50	427	-.116	.113	.272	-.568
50	428	-.502	.215	.223	-1.462
50	429	-.497	.227	.307	-1.583
50	430	.231	.224	.959	-.870
50	431	.204	.187	.887	-.670
50	432	.038	.168	.565	-.543
50	433	.063	.179	.648	-.602
50	434	.026	.190	.589	-.808
50	435	.028	.181	.587	-.878
50	436	-.133	.192	.478	-.660
50	437	-.078	.182	.628	-.597
50	438	-.259	.112	.134	-.631
50	439	-.174	.106	.193	-.538
50	440	-.169	.100	.152	-.532
50	441	-.172	.165	.288	-1.108
50	442	-.075	.189	.516	-1.189
50	443	-.140	.272	.651	-1.317
50	444	-.464	.371	.436	-1.666
50	445	.423	.174	1.180	-.072
50	446	.345	.183	1.043	-.227
50	447	.377	.178	1.097	-.152
50	448	-.253	.099	.074	-.640
50	449	-.144	.106	.148	-.547
50	450	-.164	.114	.242	-.707
50	451	-.069	.122	.336	-.561
50	452	-.152	.154	.275	-.788
50	453	-.240	.191	.503	-.951
50	454	-.315	.178	.504	-1.075
50	455	.210	.167	.760	-.505
50	456	.250	.162	.894	-.331
50	457	.287	.182	1.052	-.416
50	458	.137	.181	.808	-.653
50	459	.166	.198	.802	-.558
50	460	.072	.210	.778	-.856
50	461	-.177	.112	.201	-.540
50	462	-.229	.114	.169	-.602
50	463	-.128	.111	.235	-.501
50	464	-.102	.095	.247	-.424
50	465	-.073	.123	.320	-.536
50	466	-.162	.194	.394	-1.103
50	467	-.019	.203	.542	-.929
50	468	-.154	.286	.586	-1.376
50	469	-.157	.109	.197	-.508
50	470	-.131	.104	.202	-.466
50	471	-.104	.105	.245	-.448
50	472	-.090	.093	.238	-.594
50	473	-.035	.117	.363	-.488
50	474	.015	.137	.469	-.635
50	475	-.005	.195	.564	-.987
50	476	-.070	.158	.397	-.765
50	477	-.155	.105	.170	-.547
50	478	-.100	.102	.242	-.469
50	479	-.078	.103	.265	-.483
50	480	-.065	.092	.236	-.432
50	481	-.001	.114	.402	-.448
50	483	.077	.137	.551	-.582
50	484	.023	.128	.395	-.544
50	485	-.069	.121	.334	-.465
50	486	.099	.112	.479	-.313
50	501	.095	.127	.572	-.423
50	502	.088	.118	.502	-.339
50	503	.048	.128	.491	-.382
50	504	.079	.115	.448	-.375
50	505	-.001	.113	.346	-.489
50	506	.053	.109	.436	-.323
50	507	.059	.115	.506	-.364
50	508	.057	.116	.432	-.408
50	509	.074	.100	.397	-.271
50	510	.020	.123	.433	-.541
50	511	.063	.112	.439	-.367
50	512	.085	.112	.476	-.281
50	601	.015	.129	.470	-.510
50	602	-.013	.106	.332	-.336
50	603	-.068	.099	.284	-.372
50	604	-.124	.107	.246	-.557
50	605	-.151	.109	.235	-.502

APPENDIX A -- PRESSURE DATA: CONFIGURATION A; HOUSTON NATIONAL BANK

WD	TAP	CPMEAN	CPRMS	CPMAX	CPMIN
50	606	.035	.105	.400	-.320
50	607	-.053	.111	.379	-.471
50	608	-.185	.111	.222	-.581
50	609	.074	.115	.466	-.290
50	610	.036	.129	.501	-.333
50	611	-.022	.124	.382	-.461
50	612	-.099	.118	.294	-.530
50	613	-.142	.115	.258	-.547
50	614	.089	.111	.551	-.352
50	615	-.033	.136	.530	-.458
50	701	-.224	.120	.180	-.642
50	702	-.238	.108	.109	-.660
50	703	-.208	.121	.172	-.698
50	704	-.235	.121	.158	-.703
50	705	-.147	.115	.237	-.556
50	706	-.234	.103	.147	-.647
50	707	-.199	.113	.210	-.709
50	708	-.167	.112	.265	-.679
50	709	-.121	.114	.307	-.643
50	710	-.154	.102	.213	-.506
50	711	-.176	.118	.215	-.595
50	712	-.192	.119	.204	-.628
50	801	-.206	.104	.144	-.713
50	802	-.147	.120	.236	-.663
50	803	-.119	.120	.273	-.646
50	804	.000	.131	.449	-.491
50	805	.038	.157	.641	-.547
50	806	-.174	.111	.219	-.544
50	807	-.151	.115	.210	-.545
50	808	.049	.170	.610	-.525
50	809	-.233	.113	.117	-.585
50	810	-.151	.119	.201	-.627
50	811	-.264	.142	.145	-.803
50	812	-.031	.118	.364	-.491
50	813	-.022	.147	.547	-.606
50	814	-.179	.118	.156	-.607
50	815	-.160	.120	.171	-.649
50	816	-.142	.125	.198	-.633
50	817	-.149	.102	.153	-.568
50	818	-.126	.149	.361	-.758
50	819	-.177	.118	.235	-.637
50	820	-.098	.118	.295	-.565
50	821	-.147	.106	.232	-.547
50	822	-.038	.116	.511	-.418
50	823	-.002	.195	.918	-.515
50	901	-.212	.120	.222	-.675
50	902	-.190	.118	.240	-.585
50	903	-.197	.095	.128	-.524
50	904	-.082	.107	.269	-.460
50	905	-.228	.126	.207	-.889
50	906	-.102	.108	.243	-.486
50	907	-.270	.118	.079	-.694
50	908	-.064	.120	.361	-.474
50	909	-.034	.124	.400	-.473
50	910	.096	.164	.734	-.410
50	911	.009	.120	.556	-.345
50	912	.105	.135	.771	-.343
50	913	.006	.175	.672	-.702
50	914	.024	.130	.440	-.438
50	915	.063	.119	.497	-.616
60	1	-.295	.113	.065	-.770
60	2	-.294	.101	.038	-.611
60	3	-.224	.184	.472	-.916
60	4	-.215	.194	.378	-.912
60	5	-.325	.121	.089	-.740
60	6	-.304	.102	.006	-.726
60	7	-.063	.117	.380	-.549
60	8	-.035	.116	.427	-.517
60	9	-.317	.103	.061	-.677
60	10	-.335	.116	.005	-.803
60	11	-.241	.115	.160	-.696
60	12	-.207	.104	.175	-.566
60	13	.333	.165	.977	-.192
60	14	.362	.159	.951	-.087
60	15	-.144	.173	.569	-.738
60	16	-.238	.151	.461	-.745
60	17	.293	.163	.890	-.251
60	18	.270	.137	.711	-.183
60	19	-.315	.144	.211	-.890
60	20	-.288	.129	.139	-.779
60	21	.205	.166	.746	-.423
60	22	.236	.146	.701	-.326
60	23	-.368	.149	.058	-1.002
60	24	-.315	.135	.108	-.837
60	25	.336	.168	.924	-.140
60	26	.352	.158	.906	-.156
60	27	.010	.183	.875	-.604
60	28	-.267	.166	.471	-.969
60	29	.296	.174	.956	-.257
60	30	.276	.141	.764	-.283
60	31	-.220	.140	.224	-.689
60	32	-.328	.133	.121	-.793
60	101	.159	.120	.635	-.253
60	102	.391	.169	1.008	-.172
60	103	.334	.162	.952	-.186
60	104	.403	.166	1.053	-.178
60	105	.151	.116	.603	-.250
60	106	.414	.171	.974	-.079
60	107	.340	.169	.908	-.104
60	108	-.027	.129	.428	-.407
60	109	.358	.138	.910	-.025
60	110	.337	.153	.834	-.142
60	111	.396	.165	.949	-.115
60	112	.373	.170	.990	-.093
60	113	-.259	.139	.215	-.901
60	114	-.128	.204	.545	-.841
60	115	-.132	.188	.529	-.707
60	116	.022	.139	.563	-.460
60	117	.375	.165	.885	-.269
60	118	.292	.171	.869	-.234
60	119	.340	.173	1.062	-.200
60	120	.394	.176	1.179	-.239
60	121	.372	.137	.866	-.037
60	122	.347	.178	.923	-.650
60	123	.029	.135	.531	-.539
60	124	-.078	.129	.543	-.616
60	125	-.221	.118	.178	-.608
60	126	-.261	.140	.277	-.720
60	127	.311	.165	.855	-.185
60	128	.366	.167	.912	-.231
60	129	.404	.149	.952	.009
60	130	.294	.157	.793	-.148
60	131	-.041	.123	.379	-.435
60	132	-.279	.133	.129	-.770
60	133	-.283	.104	.047	-.783
60	134	.417	.164	1.067	-.055
60	135	.403	.163	1.103	-.070
60	136	.423	.163	1.124	-.014
60	137	.379	.154	.851	-.059
60	138	.271	.164	.880	-.213
60	139	.166	.156	.824	-.319
60	140	-.003	.134	.543	-.458
60	141	-.085	.104	.373	-.450
60	142	.388	.166	.991	-.139
60	143	.432	.170	1.064	-.080
60	144	.418	.166	.980	-.030
60	145	-.177	.198	.509	-.833
60	146	.051	.166	.670	-.698
60	147	-.015	.138	.507	-.676
60	148	-.016	.152	.569	-.493
60	149	.088	.219	.714	-.677
60	150	.173	.162	.862	-.367
60	151	.300	.155	.794	-.158
60	152	.353	.159	.877	-.086
60	153	.376	.137	.854	-.029
60	154	.195	.210	.809	-.673
60	155	.055	.131	.501	-.316
60	156	.013	.157	.577	-.571
60	157	-.229	.144	.204	-.823
60	158	-.206	.169	.326	-.996

APPENDIX A -- PRESSURE DATA: CONFIGURATION A; HOUSTON NATIONAL BANK

WD	TAP	CPMEAN	CPRMS	CPMAX	CPMIN
60	159	.289	.163	.921	-.312
60	160	.350	.164	.958	-.265
60	161	.293	.161	.920	-.248
60	162	.206	.154	.750	-.280
60	163	-.068	.125	.368	-.493
60	164	-.371	.148	.123	-1.013
60	165	-.390	.117	-.045	-.943
60	166	.266	.176	.940	-.478
60	167	.250	.166	.926	-.712
60	168	.249	.157	.932	-.361
60	169	.221	.123	.747	-.156
60	170	.171	.138	.796	-.232
60	171	.114	.133	.670	-.287
60	172	-.037	.121	.478	-.417
60	173	-.133	.105	.201	-.489
60	174	.093	.130	.598	-.537
60	175	.100	.119	.539	-.540
60	176	.079	.109	.453	-.304
60	177	.031	.100	.368	-.297
60	178	.005	.116	.379	-.352
60	179	-.139	.129	.288	-.524
60	180	-.166	.126	.238	-.550
60	181	.007	.094	.395	-.353
60	182	.022	.101	.419	-.272
60	183	-.030	.110	.423	-.417
60	184	.021	.104	.426	-.349
60	185	.043	.089	.401	-.306
60	186	.051	.102	.443	-.337
60	187	.015	.109	.374	-.429
60	188	.051	.111	.491	-.389
60	189	.039	.097	.398	-.273
60	190	-.052	.111	.448	-.420
60	191	-.200	.116	.213	-.638
60	201	-.271	.113	.112	-.613
60	202	-.284	.102	.019	-.715
60	203	-.290	.129	.091	-.897
60	204	-.354	.136	.073	-.827
60	205	-.321	.150	.127	-.865
60	206	-.260	.095	.056	-.635
60	207	-.258	.106	.100	-.667
60	208	-.335	.115	.085	-.796
60	209	-.320	.126	.092	-.863
60	210	-.320	.117	.085	-.920
60	211	-.309	.119	.209	-.803
60	212	-.375	.122	.145	-.860
60	213	-.333	.121	.165	-.879
60	214	-.360	.113	-.048	-.848
60	215	-.355	.129	.001	-.890
60	216	-.554	.172	-.100	-1.317
60	217	-.500	.165	-.063	-1.273

WD	TAP	CPMEAN	CPRMS	CPMAX	CPMIN
60	218	-.385	.125	-.030	-.894
60	219	-.364	.168	.139	-1.286
60	220	-.593	.217	-.084	-1.547
60	221	-.426	.147	.005	-.940
60	222	-.379	.116	-.007	-.825
60	223	-.350	.120	.082	-.822
60	224	-.413	.129	.004	-.954
60	225	-.343	.132	.087	-.819
60	226	-.363	.123	-.021	-.812
60	227	-.387	.157	.015	-1.046
60	228	-.213	.151	.279	-.726
60	229	-.362	.160	.125	-1.088
60	230	-.353	.136	.024	-.898
60	231	-.293	.142	.207	-1.024
60	232	-.342	.131	.095	-.837
60	233	-.294	.129	.115	-.832
60	234	-.290	.109	.065	-.671
60	235	-.299	.125	.108	-.747
60	236	-.417	.144	.020	-1.023
60	237	-.330	.150	.077	-1.322
60	238	-.269	.095	.028	-.592
60	239	-.273	.108	.074	-.637
60	240	-.383	.125	.007	-.894
60	241	-.296	.109	.109	-.681
60	242	-.272	.099	.073	-.704
60	243	-.308	.121	.080	-.765
60	244	-.342	.124	.064	-1.253
60	245	-.416	.189	.198	-1.161
60	246	-.371	.162	.211	-.796
60	247	-.277	.187	.389	-.915
60	248	-.491	.187	.069	-1.251
60	249	-.604	.258	.028	-2.047
60	250	-.076	.143	.443	-.556
60	251	-.308	.127	.119	-.812
60	252	-.368	.130	.079	-.920
60	253	-.314	.123	.094	-.746
60	254	-.312	.104	.022	-.790
60	255	-.309	.112	.056	-.720
60	256	-.362	.117	.033	-.798
60	257	-.312	.118	.141	-.954
60	258	-.391	.126	.021	-.932
60	259	-.425	.149	.047	-1.074
60	260	-.531	.197	.017	-1.413
60	261	-.409	.140	.028	-.954
60	262	-.333	.106	.032	-.753
60	263	-.367	.114	.020	-.844
60	264	-.359	.115	.024	-.806
60	265	-.370	.118	.034	-.852
60	266	-.254	.103	.088	-.618
60	267	-.281	.121	.108	-.739

WD	TAP	CPMEAN	CPRMS	CPMAX	CPMIN
60	268	-.289	.122	.070	-.782
60	269	-.367	.129	.041	-.972
60	270	-.309	.107	.022	-.783
60	271	-.400	.132	.086	-.884
60	272	-.356	.131	.192	-.764
60	273	-.291	.132	.270	-.812
60	274	-.171	.096	.155	-.483
60	275	-.213	.110	.163	-.555
60	276	-.225	.112	.157	-.577
60	277	-.219	.132	.343	-.778
60	278	-.108	.100	.237	-.619
60	279	-.180	.117	.211	-.703
60	280	-.381	.148	.058	-1.163
60	281	-.383	.154	.130	-1.278
60	282	-.167	.165	.301	-1.057
60	283	-.132	.134	.320	-.643
60	284	-.154	.123	.287	-.699
60	285	-.160	.119	.269	-.567
60	286	-.092	.082	.154	-.410
60	287	-.103	.098	.191	-.513
60	288	-.105	.097	.192	-.508
60	301	-.292	.115	.103	-.765
60	302	-.228	.095	.125	-.541
60	303	-.277	.110	.130	-.633
60	304	-.295	.109	.083	-.654
60	305	-.303	.114	.110	-.663
60	306	-.240	.094	.080	-.602
60	307	-.268	.110	.113	-.665
60	308	-.269	.112	.126	-.695
60	309	-.305	.116	.034	-.738
60	310	-.266	.095	.074	-.605
60	311	-.302	.111	.095	-.710
60	312	-.280	.105	.085	-.673
60	313	-.284	.106	.115	-.680
60	314	-.199	.081	.111	-.479
60	315	-.231	.098	.145	-.555
60	316	-.230	.101	.144	-.566
60	317	-.293	.106	.110	-.736
60	318	-.221	.090	.081	-.515
60	319	-.266	.106	.082	-.604
60	320	-.269	.106	.078	-.619
60	321	-.278	.107	.068	-.644
60	322	-.254	.112	.114	-.669
60	323	-.251	.096	.091	-.587
60	324	-.287	.112	.078	-.769
60	325	-.293	.110	.057	-.735
60	326	-.209	.087	.074	-.490
60	327	-.254	.104	.082	-.619
60	328	-.256	.105	.077	-.615
60	329	-.261	.104	.077	-.590

APPENDIX A -- PRESSURE DATA: CONFIGURATION A: HOUSTON NATIONAL BANK

WD	TAP	CPMEAN	CPRMS	CPMAX	CPMIN
60	330	-.203	.090	.092	-.556
60	331	-.293	.116	.134	-.704
60	332	-.291	.113	.111	-.708
60	333	-.293	.113	.053	-.705
60	334	-.222	.084	.055	-.527
60	335	-.263	.101	.104	-.649
60	336	-.259	.103	.105	-.657
60	337	-.267	.104	.108	-.643
60	338	-.220	.104	.083	-.605
60	339	-.268	.124	.111	-.770
60	340	-.263	.121	.158	-.699
60	341	-.265	.119	.113	-.687
60	342	-.205	.100	.104	-.545
60	343	-.238	.120	.114	-.623
60	344	-.241	.121	.132	-.632
60	345	-.234	.120	.131	-.685
60	346	-.183	.088	.146	-.536
60	347	-.266	.112	.187	-.658
60	348	-.313	.121	.198	-.848
60	349	-.354	.133	.111	-1.017
60	350	-.257	.108	.057	-.735
60	351	-.288	.122	.062	-.873
60	352	-.313	.128	.101	-.976
60	353	-.352	.191	.068	-1.648
60	354	-.202	.099	.122	-.657
60	355	-.233	.115	.146	-.821
60	356	-.108	.105	.321	-.543
60	357	-.102	.105	.326	-.505
60	358	-.093	.088	.202	-.400
60	359	-.133	.104	.227	-.492
60	360	-.161	.106	.212	-.534
60	361	-.152	.111	.212	-.552
60	362	-.120	.101	.240	-.525
60	401	-.176	.113	.183	-.549
60	402	-.140	.116	.215	-.548
60	403	.008	.132	.472	-.549
60	404	.009	.182	.609	-.868
60	405	-.126	.311	.747	-1.181
60	406	-.205	.110	.165	-.585
60	407	-.145	.110	.255	-.515
60	408	.017	.112	.474	-.394
60	409	-.099	.274	.706	-1.039
60	410	-.222	.270	.851	-1.201
60	411	-.201	.113	.233	-.616
60	412	-.108	.092	.195	-.407
60	413	-.002	.129	.457	-.578
60	414	-.281	.230	.420	-1.232
60	415	-.317	.217	.611	-1.305
60	416	-.167	.090	.176	-.469
60	417	-.115	.111	.320	-.538
60	418	-.063	.120	.368	-.668
60	419	-.328	.252	.694	-1.294
60	420	-.360	.190	.285	-1.089
60	421	.434	.181	1.020	-.301
60	422	.291	.174	.818	-.352
60	423	.320	.180	.968	-.270
60	424	.301	.184	.872	-.720
60	425	-.211	.112	.166	-.593
60	426	-.141	.095	.253	-.450
60	427	-.055	.126	.381	-.549
60	428	-.294	.181	.295	-.863
60	429	-.346	.194	.389	-1.057
60	430	.327	.161	.860	-.224
60	431	.281	.155	.803	-.300
60	432	.247	.150	.842	-.340
60	433	.220	.188	.945	-.429
60	434	.200	.148	.751	-.291
60	435	.172	.140	.795	-.321
60	436	.161	.204	.761	-.482
60	437	.134	.239	.925	-.564
60	438	-.249	.115	.094	-.627
60	439	-.181	.114	.145	-.539
60	440	-.052	.095	.256	-.413
60	441	-.103	.166	.345	-.990
60	442	.115	.148	.612	-.517
60	443	.132	.223	.743	-1.145
60	444	-.005	.286	.714	-1.356
60	445	.410	.170	1.532	-.120
60	446	.372	.179	1.461	-.276
60	447	.374	.184	1.543	-.248
60	448	-.217	.102	.099	-.570
60	449	-.159	.110	.294	-.563
60	450	-.112	.115	.276	-.499
60	451	-.027	.121	.349	-.453
60	452	.004	.119	.383	-.570
60	453	-.145	.205	.564	-1.219
60	454	-.191	.180	.379	-1.231
60	455	.318	.172	.901	-.358
60	456	.339	.147	.996	-.183
60	457	.345	.175	1.127	-.278
60	458	.231	.157	.771	-.315
60	459	.262	.162	.786	-.380
60	460	.229	.166	.830	-.551
60	461	-.213	.111	.124	-.572
60	462	-.209	.108	.126	-.563
60	463	-.111	.106	.214	-.468
60	464	-.071	.092	.314	-.389
60	465	-.015	.113	.409	-.404
60	466	-.074	.177	.443	-1.158
60	467	.151	.166	.678	-.745
60	468	.116	.219	.662	-1.099
60	469	-.246	.123	.145	-.651
60	470	-.192	.115	.187	-.606
60	471	-.113	.112	.251	-.551
60	472	-.070	.098	.273	-.375
60	473	-.000	.119	.456	-.382
60	474	.070	.125	.529	-.417
60	475	.105	.153	.627	-.483
60	476	.094	.151	.628	-.625
60	477	-.199	.109	.179	-.611
60	478	-.127	.113	.201	-.541
60	479	-.062	.112	.288	-.426
60	480	-.022	.105	.323	-.345
60	481	.067	.130	.473	-.318
60	483	.126	.132	.599	-.278
60	484	.062	.105	.491	-.490
60	485	-.083	.115	.342	-.578
60	486	.076	.114	.610	-.413
60	501	.049	.127	.547	-.466
60	502	.067	.113	.541	-.355
60	503	.022	.122	.538	-.457
60	504	.057	.111	.434	-.365
60	505	-.035	.104	.352	-.529
60	506	.029	.104	.495	-.324
60	507	.009	.112	.601	-.351
60	508	.012	.114	.424	-.422
60	509	.013	.104	.364	-.352
60	510	.009	.131	.474	-.568
60	511	.038	.116	.464	-.402
60	512	.060	.115	.480	-.336
60	601	.045	.115	.488	-.388
60	602	.032	.119	.483	-.360
60	603	-.037	.103	.319	-.343
60	604	-.124	.114	.291	-.511
60	605	-.230	.117	.185	-.690
60	606	.035	.097	.359	-.346
60	607	-.013	.110	.351	-.429
60	608	-.233	.118	.148	-.707
60	609	.076	.105	.415	-.345
60	610	.102	.121	.647	-.262
60	611	.029	.115	.427	-.352
60	612	-.093	.109	.274	-.454
60	613	-.162	.111	.183	-.546
60	614	.044	.109	.455	-.298
60	615	-.102	.120	.327	-.490
60	701	-.305	.126	.093	-.808
60	702	-.331	.118	.044	-.733
60	703	-.290	.136	.200	-.720
60	704	-.323	.130	.114	-.717
60	705	-.176	.126	.258	-.600

APPENDIX A -- PRESSURE DATA: CONFIGURATION A; HOUSTON NATIONAL BANK

WD	TAP	CPMEAN	CPRMS	CPMAX	CPMIN
60	706	-.318	.117	.052	-.764
60	707	-.250	.120	.141	-.731
60	708	-.227	.120	.170	-.712
60	709	-.135	.116	.285	-.533
60	710	-.159	.106	.220	-.566
60	711	-.214	.133	.314	-.853
60	712	-.266	.126	.138	-.793
60	801	-.257	.113	.114	-.626
60	802	-.123	.118	.283	-.573
60	803	-.092	.114	.337	-.482
60	804	.042	.121	.506	-.382
60	805	.067	.145	.565	-.370
60	806	-.237	.120	.226	-.702
60	807	-.142	.111	.217	-.603
60	808	.080	.155	.701	-.354
60	809	-.277	.115	.080	-.668
60	810	-.129	.117	.256	-.537
60	811	-.229	.134	.170	-.745
60	812	-.021	.112	.373	-.377
60	813	-.007	.135	.711	-.455
60	814	-.204	.114	.182	-.721
60	815	-.155	.111	.225	-.562
60	816	-.127	.116	.239	-.649
60	817	-.128	.095	.153	-.429
60	818	-.032	.136	.430	-.552
60	819	-.203	.119	.252	-.576
60	820	-.086	.111	.324	-.447
60	821	-.150	.101	.167	-.510
60	822	-.011	.114	.634	-.377
60	823	.060	.188	.987	-.690
60	901	-.223	.120	.310	-.650
60	902	-.232	.116	.187	-.679
60	903	-.218	.106	.117	-.546
60	904	-.084	.114	.338	-.451
60	905	-.205	.126	.211	-.688
60	906	-.070	.110	.393	-.426
60	907	-.256	.121	.160	-.813
60	908	-.037	.116	.455	-.407
60	909	.006	.119	.481	-.394
60	910	.097	.158	.737	-.500
60	911	.059	.122	.508	-.317
60	912	.157	.141	.676	-.236
60	913	.058	.147	.638	-.428
60	914	.043	.115	.416	-.315
60	915	.064	.113	.507	-.316
70	1	-.294	.112	.063	-.793
70	2	-.267	.100	.050	-.628
70	3	-.063	.202	.856	-.700
70	4	-.065	.203	.789	-.792
70	5	-.322	.122	.102	-.749
70	6	-.272	.096	.049	-.596
70	7	-.006	.129	.693	-.504
70	8	.016	.119	.505	-.445
70	9	-.315	.105	.021	-.772
70	10	-.290	.106	.105	-.695
70	11	-.227	.116	.222	-.616
70	12	-.217	.109	.129	-.584
70	13	.361	.172	.921	-.241
70	14	.359	.151	.915	-.069
70	15	-.253	.123	.265	-.676
70	16	-.259	.111	.159	-.635
70	17	.332	.158	.948	-.132
70	18	.334	.150	.860	-.106
70	19	-.306	.130	.104	-.862
70	20	-.255	.117	.112	-.674
70	21	.292	.178	1.026	-.312
70	22	.277	.143	.871	-.215
70	23	-.293	.126	.130	-.856
70	24	-.248	.113	.110	-.662
70	25	.313	.146	.789	-.172
70	26	.375	.142	.950	-.041
70	27	-.068	.183	.741	-.631
70	28	-.271	.144	.349	-.798
70	29	.311	.163	.889	-.122
70	30	.238	.132	.714	-.224
70	31	-.294	.141	.111	-1.004
70	32	-.289	.123	.114	-.807
70	101	.098	.119	.482	-.340
70	102	.446	.195	1.179	-.365
70	103	.334	.169	.871	-.278
70	104	.483	.195	1.202	-.301
70	105	.059	.114	.523	-.354
70	106	.455	.187	1.193	-.309
70	107	.278	.159	.967	-.223
70	108	-.125	.124	.319	-.602
70	109	.432	.151	1.008	-.047
70	110	.418	.168	1.079	-.300
70	111	.466	.170	1.081	-.175
70	112	.416	.161	.936	-.117
70	113	-.282	.121	.140	-.870
70	114	-.242	.146	.361	-.799
70	115	-.235	.146	.333	-.843
70	116	.003	.139	.502	-.448
70	117	.262	.195	.772	-.606
70	118	.226	.158	.702	-.283
70	119	.407	.174	1.232	-.181
70	120	.462	.182	1.264	-.167
70	121	.429	.143	.962	-.003
70	122	.322	.178	.878	-.738
70	123	-.003	.117	.484	-.453
70	124	-.169	.108	.213	-.580
70	125	-.280	.107	.031	-.678
70	126	-.287	.126	.091	-.799
70	127	.375	.170	1.014	-.152
70	128	.434	.177	1.073	-.091
70	129	.414	.151	.894	-.107
70	130	.232	.137	.755	-.204
70	131	-.089	.116	.333	-.470
70	132	-.266	.118	.093	-.691
70	133	-.253	.100	.049	-.575
70	134	.391	.177	.965	-.168
70	135	.398	.176	1.030	-.175
70	136	.387	.170	.945	-.129
70	137	.300	.131	.970	-.138
70	138	.173	.136	.887	-.330
70	139	.063	.130	.713	-.399
70	140	-.084	.117	.364	-.496
70	141	-.151	.102	.247	-.517
70	142	.407	.173	.910	-.089
70	143	.426	.170	.931	-.080
70	144	.387	.164	.945	-.094
70	145	-.395	.156	.149	-.991
70	146	-.087	.178	.530	-.878
70	147	-.106	.145	.360	-.843
70	148	-.133	.131	.311	-.616
70	149	-.071	.231	.644	-.896
70	150	.130	.161	.667	-.638
70	151	.357	.166	.897	-.069
70	152	.400	.172	.961	-.023
70	153	.394	.145	.865	-.072
70	154	.029	.250	.764	-.902
70	155	-.032	.125	.413	-.447
70	156	-.117	.174	.586	-.704
70	157	-.331	.133	.085	-.825
70	158	-.310	.155	.164	-.872
70	159	.311	.165	.905	-.174
70	160	.358	.167	.967	-.151
70	161	.201	.213	.996	-.512
70	162	.149	.155	.763	-.286
70	163	-.119	.123	.327	-.485
70	164	-.361	.143	.088	-1.035
70	165	-.344	.110	-.023	-.778
70	166	.211	.195	.824	-.641
70	167	.223	.180	.828	-.468
70	168	.213	.160	.797	-.380
70	169	.162	.125	.565	-.193
70	170	.116	.134	.530	-.270
70	171	.054	.125	.484	-.344
70	172	-.098	.115	.346	-.484
70	173	-.195	.102	.186	-.526

APPENDIX A -- PRESSURE DATA: CONFIGURATION A: HOUSTON NATIONAL BANK

WD	TAP	CPMEAN	CPRMS	CPMAX	CPMIN
70	174	.014	.171	.571	-.587
70	175	.041	.154	.544	-.629
70	176	.040	.113	.611	-.387
70	177	-.015	.094	.328	-.305
70	178	-.045	.105	.351	-.374
70	179	-.194	.112	.160	-.565
70	180	-.214	.110	.151	-.661
70	181	-.060	.105	.296	-.563
70	182	-.032	.101	.354	-.364
70	183	-.102	.126	.343	-.543
70	184	-.042	.114	.399	-.461
70	185	.000	.099	.329	-.329
70	186	.008	.112	.389	-.358
70	187	-.032	.123	.488	-.445
70	188	.006	.126	.589	-.400
70	189	-.018	.105	.368	-.334
70	190	-.104	.117	.342	-.513
70	191	-.249	.120	.193	-.714
70	201	-.276	.123	.088	-.810
70	202	-.268	.108	.054	-.646
70	203	-.264	.125	.128	-.761
70	204	-.329	.131	.076	-.785
70	205	-.285	.135	.124	-.847
70	206	-.284	.097	.051	-.655
70	207	-.279	.109	.085	-.703
70	208	-.345	.115	.013	-.782
70	209	-.312	.118	.047	-.797
70	210	-.291	.102	.018	-.909
70	211	-.293	.119	.100	-.681
70	212	-.354	.122	.035	-.755
70	213	-.301	.115	.070	-.751
70	214	-.326	.106	.028	-.760
70	215	-.321	.123	.055	-.828
70	216	-.377	.150	.070	-1.008
70	217	-.331	.146	.101	-.922
70	218	-.309	.121	.070	-.734
70	219	-.283	.140	.150	-1.299
70	220	-.439	.168	.091	-1.063
70	221	-.365	.149	.097	-.957
70	222	-.350	.113	-.027	-.801
70	223	-.318	.116	.043	-.790
70	224	-.377	.123	.035	-.862
70	225	-.296	.125	.070	-.808
70	226	-.319	.116	.065	-.781
70	227	-.323	.134	.115	-.823
70	228	-.322	.125	.110	-.761
70	229	-.302	.127	.108	-1.035
70	230	-.290	.113	.077	-.840
70	231	-.261	.123	.113	-1.307
70	232	-.323	.120	.107	-.860
70	233	-.279	.115	.131	-.781
70	234	-.254	.098	.021	-.602
70	235	-.253	.110	.059	-.649
70	236	-.331	.122	.011	-.754
70	237	-.276	.112	.045	-.718
70	238	-.263	.099	.140	-.593
70	239	-.258	.111	.173	-.647
70	240	-.324	.115	.070	-.713
70	241	-.280	.110	.090	-.671
70	242	-.285	.094	.048	-.603
70	243	-.290	.111	.089	-.676
70	244	-.342	.118	.063	-.795
70	245	-.455	.170	-.012	-1.116
70	246	-.450	.132	-.091	-.918
70	247	-.374	.156	.081	-1.004
70	248	-.457	.171	-.031	-1.492
70	249	-.503	.215	-.027	-2.078
70	250	-.177	.144	.298	-.566
70	251	-.331	.130	.066	-.877
70	252	-.378	.134	.064	-1.203
70	253	-.312	.119	.054	-.791
70	254	-.304	.096	-.019	-.638
70	255	-.294	.106	.062	-.665
70	256	-.344	.112	.041	-.769
70	257	-.297	.112	.064	-.704
70	258	-.339	.115	-.010	-.734
70	259	-.351	.135	.065	-.961
70	260	-.435	.171	.036	-1.294
70	261	-.365	.127	.035	-.780
70	262	-.310	.108	.094	-.708
70	263	-.351	.121	.060	-.743
70	264	-.369	.123	.064	-.770
70	265	-.374	.122	.065	-.820
70	266	-.297	.102	.058	-.603
70	267	-.320	.122	.097	-.722
70	268	-.338	.121	.057	-.813
70	269	-.385	.129	.081	-.823
70	270	-.316	.102	.026	-.727
70	271	-.398	.129	.008	-.880
70	272	-.364	.134	.162	-.873
70	273	-.320	.127	.105	-.810
70	274	-.238	.111	.154	-.619
70	275	-.259	.131	.267	-.731
70	276	-.274	.134	.276	-.735
70	277	-.266	.146	.252	-.768
70	278	-.141	.107	.257	-.498
70	279	-.206	.125	.249	-.626
70	280	-.359	.145	.095	-1.330
70	281	-.404	.154	.081	-1.522
70	282	-.302	.138	.183	-.891
70	283	-.190	.143	.306	-.761
70	284	-.181	.131	.362	-.662
70	285	-.184	.128	.248	-.606
70	286	-.124	.098	.244	-.423
70	287	-.116	.115	.306	-.507
70	288	-.121	.114	.289	-.509
70	301	-.302	.125	.166	-.820
70	302	-.244	.097	.073	-.586
70	303	-.282	.113	.091	-.674
70	304	-.303	.111	.070	-.705
70	305	-.307	.115	.068	-.689
70	306	-.269	.095	.026	-.610
70	307	-.292	.112	.054	-.681
70	308	-.296	.115	.076	-.698
70	309	-.278	.109	.087	-.670
70	310	-.259	.100	.078	-.601
70	311	-.294	.117	.131	-.681
70	312	-.290	.113	.109	-.664
70	313	-.290	.115	.118	-.677
70	314	-.236	.093	.086	-.593
70	315	-.268	.110	.101	-.691
70	316	-.275	.113	.103	-.704
70	317	-.326	.118	.067	-.819
70	318	-.261	.089	.063	-.640
70	319	-.297	.102	.069	-.631
70	320	-.303	.103	.061	-.638
70	321	-.305	.103	.056	-.628
70	322	-.250	.106	.094	-.670
70	323	-.242	.094	.053	-.568
70	324	-.334	.129	.066	-.980
70	325	-.336	.126	.061	-.982
70	326	-.264	.091	.071	-.577
70	327	-.298	.109	.091	-.678
70	328	-.303	.109	.087	-.695
70	329	-.303	.110	.090	-.709
70	330	-.241	.098	.081	-.604
70	331	-.359	.139	.120	-.994
70	332	-.362	.130	.064	-.956
70	333	-.358	.127	.014	-.895
70	334	-.277	.104	.047	-.761
70	335	-.303	.125	.100	-1.046
70	336	-.302	.124	.103	-.972
70	337	-.301	.124	.121	-.940
70	338	-.334	.126	.118	-.963
70	339	-.369	.142	.162	-1.110
70	340	-.386	.139	.100	-.995
70	341	-.400	.143	.089	-.997
70	342	-.349	.124	.059	-.760
70	343	-.363	.143	.106	-.924
70	344	-.370	.143	.094	-.923

APPENDIX A -- PRESSURE DATA: CONFIGURATION A; HOUSTON NATIONAL BANK

WD	TAP	CPMEAN	CPRMS	CPMAX	CPMIN
70	345	-.271	.135	.176	-.759
70	346	-.200	.108	.118	-.619
70	347	-.304	.140	.144	-.778
70	348	-.418	.161	.041	-1.056
70	349	-.546	.193	-.006	-1.669
70	350	-.561	.197	-.099	-1.875
70	351	-.545	.209	-.049	-1.676
70	352	-.543	.196	-.052	-1.395
70	353	-.790	.412	-.008	-2.876
70	354	-.340	.133	.027	-.902
70	355	-.342	.148	.072	-.941
70	356	-.151	.117	.230	-.565
70	357	-.135	.116	.237	-.521
70	358	-.160	.102	.179	-.529
70	359	-.179	.119	.220	-.587
70	360	-.225	.125	.204	-.623
70	361	-.209	.124	.255	-.613
70	362	-.177	.106	.179	-.604
70	401	-.164	.115	.253	-.553
70	402	-.121	.125	.352	-.539
70	403	.077	.144	.772	-.382
70	404	.194	.182	.908	-.488
70	405	.197	.276	1.180	-.931
70	406	-.216	.117	.247	-.593
70	407	-.132	.120	.383	-.512
70	408	.047	.119	.565	-.334
70	409	.102	.231	.853	-.924
70	410	.002	.294	.989	-1.152
70	411	-.199	.117	.210	-.641
70	412	-.131	.097	.355	-.463
70	413	.058	.127	.641	-.476
70	414	-.148	.243	.532	-1.010
70	415	-.206	.261	.945	-1.251
70	416	-.195	.098	.124	-.530
70	417	-.104	.110	.291	-.469
70	418	-.013	.130	.444	-.498
70	419	-.151	.267	.625	-.962
70	420	-.236	.217	.647	-1.763
70	421	.453	.192	1.151	-.138
70	422	.341	.178	.994	-.250
70	423	.423	.196	1.114	-.153
70	424	.408	.179	1.124	-.230
70	425	-.230	.106	.103	-.581
70	426	-.114	.089	.208	-.426
70	427	-.019	.124	.418	-.541
70	428	-.267	.181	.480	-1.075
70	429	-.291	.180	.331	-1.201
70	430	.392	.180	1.109	-.132
70	431	.361	.171	1.075	-.180
70	432	.393	.161	.941	-.180

WD	TAP	CPMEAN	CPRMS	CPMAX	CPMIN
70	433	.402	.194	1.095	-.291
70	434	.280	.164	.828	-.228
70	435	.271	.155	.746	-.206
70	436	.306	.170	.886	-.371
70	437	.306	.222	1.135	-.451
70	438	-.269	.117	.140	-.661
70	439	-.185	.113	.223	-.567
70	440	-.043	.099	.296	-.465
70	441	-.084	.174	.510	-1.003
70	442	.156	.143	.674	-.363
70	443	.252	.166	.793	-.641
70	444	.206	.221	.793	-.638
70	445	.412	.181	1.198	-.219
70	446	.370	.190	1.224	-.230
70	447	.353	.192	1.164	-.310
70	448	-.244	.099	.055	-.594
70	449	-.157	.106	.228	-.543
70	450	-.101	.113	.308	-.548
70	451	.002	.116	.444	-.446
70	452	.088	.117	.485	-.323
70	453	.055	.245	.722	-.910
70	454	-.029	.235	.829	-.870
70	455	.371	.182	1.024	-.204
70	456	.350	.162	.839	-.112
70	457	.345	.183	.926	-.266
70	458	.240	.168	.759	-.280
70	459	.286	.171	.809	-.299
70	460	.331	.171	.864	-.185
70	461	-.251	.128	.189	-.815
70	462	-.240	.126	.221	-.756
70	463	-.105	.120	.436	-.571
70	464	-.041	.085	.270	-.376
70	465	.002	.109	.374	-.413
70	466	-.051	.167	.615	-.790
70	467	.173	.160	.866	-.456
70	468	.174	.168	.820	-.891
70	469	-.322	.128	.127	-.823
70	470	-.237	.116	.185	-.698
70	471	-.110	.110	.264	-.505
70	472	-.042	.089	.260	-.361
70	473	.007	.111	.400	-.402
70	474	.069	.117	.445	-.354
70	475	.102	.130	.556	-.579
70	476	.091	.126	.509	-.425
70	477	-.297	.130	.123	-.781
70	478	-.172	.106	.163	-.537
70	479	-.066	.104	.247	-.390
70	480	.015	.093	.421	-.305
70	481	.083	.123	.614	-.317
70	483	.099	.125	.731	-.346

WD	TAP	CPMEAN	CPRMS	CPMAX	CPMIN
70	484	.041	.091	.323	-.265
70	485	-.086	.114	.350	-.558
70	486	.038	.105	.411	-.297
70	501	.010	.125	.493	-.595
70	502	.006	.115	.446	-.359
70	503	-.021	.119	.413	-.567
70	504	.012	.114	.424	-.451
70	505	.017	.103	.352	-.467
70	506	.007	.103	.332	-.395
70	507	.002	.112	.431	-.493
70	508	-.044	.114	.430	-.470
70	509	.030	.093	.341	-.318
70	510	.000	.115	.379	-.423
70	511	.021	.110	.395	-.330
70	512	.018	.109	.385	-.370
70	601	.027	.111	.415	-.416
70	602	.084	.110	.562	-.348
70	603	-.031	.105	.310	-.361
70	604	-.094	.108	.285	-.538
70	605	-.195	.122	.173	-.676
70	606	.062	.101	.456	-.287
70	607	.007	.120	.453	-.375
70	608	-.196	.123	.200	-.586
70	609	.051	.120	.502	-.361
70	610	.142	.124	.806	-.265
70	611	.036	.123	.547	-.362
70	612	-.075	.112	.299	-.424
70	613	-.149	.114	.240	-.501
70	614	.068	.099	.411	-.263
70	615	-.127	.118	.289	-.583
70	701	-.281	.155	.216	-1.402
70	702	-.214	.120	.222	-.690
70	703	-.238	.143	.198	-.845
70	704	-.262	.139	.177	-.875
70	705	-.164	.122	.265	-.688
70	706	-.194	.128	.210	-.690
70	707	-.214	.141	.226	-.776
70	708	-.245	.131	.190	-.691
70	709	-.161	.123	.264	-.587
70	710	-.107	.100	.204	-.497
70	711	-.110	.127	.327	-.585
70	712	-.199	.134	.108	-.661
70	801	-.136	.104	.182	-.565
70	802	-.104	.111	.332	-.475
70	803	-.074	.108	.356	-.444
70	804	.033	.123	.586	-.319
70	805	.128	.135	.593	-.280
70	806	-.179	.123	.207	-.705
70	807	-.111	.115	.382	-.538
70	808	.086	.152	.619	-.378

APPENDIX A -- PRESSURE DATA: CONFIGURATION A: HOUSTON NATIONAL BANK

WD	TAP	CPMEAN	CPRMS	CPMAX	CPMIN
70	809	-.132	.106	.172	-.531
70	810	-.099	.112	.259	-.536
70	811	-.164	.121	.242	-.705
70	812	-.030	.114	.521	-.419
70	813	.079	.111	.585	-.309
70	814	-.142	.108	.210	-.568
70	815	-.106	.102	.237	-.511
70	816	-.110	.106	.223	-.471
70	817	-.047	.085	.204	-.433
70	818	.039	.124	.584	-.408
70	819	-.133	.116	.236	-.567
70	820	-.067	.106	.278	-.458
70	821	-.076	.096	.246	-.489
70	822	-.017	.107	.387	-.402
70	823	.102	.151	.888	-.340
70	901	-.158	.120	.272	-.541
70	902	-.216	.126	.193	-.770
70	903	-.148	.099	.206	-.528
70	904	-.103	.109	.280	-.488
70	905	-.153	.116	.174	-.645
70	906	-.045	.110	.304	-.420
70	907	-.162	.123	.258	-.635
70	908	-.027	.112	.367	-.384
70	909	.047	.119	.464	-.322
70	910	.061	.143	.799	-.360
70	911	.122	.123	.743	-.253
70	912	.153	.142	.641	-.294
70	913	.089	.152	.769	-.346
70	914	.032	.113	.466	-.365
70	915	.023	.107	.403	-.382
80	1	-.328	.131	.067	-.902
80	2	-.266	.107	.015	-.711
80	3	-.122	.263	.770	-1.295
80	4	-.124	.243	.573	-1.260
80	5	-.325	.126	.004	-.879
80	6	-.282	.103	.060	-.659
80	7	-.068	.148	.722	-.721
80	8	-.042	.140	.453	-.821
80	9	-.288	.099	.011	-.678
80	10	-.292	.106	.064	-.701
80	11	-.241	.121	.206	-.723
80	12	-.210	.113	.191	-.657
80	13	.370	.186	1.116	-.191
80	14	.328	.159	.994	-.116
80	15	-.273	.126	.145	-.695
80	16	-.273	.119	.129	-.675
80	17	.307	.172	.847	-.265
80	18	.313	.144	.839	-.139
80	19	-.266	.110	.148	-.666
80	20	-.257	.104	.142	-.603
80	21	.296	.188	.979	-.584
80	22	.281	.183	.939	-.304
80	23	-.269	.121	.093	-.765
80	24	-.258	.115	.046	-.649
80	25	.289	.182	.930	-.234
80	26	.299	.165	.927	-.188
80	27	-.235	.131	.241	-.622
80	28	-.275	.114	.087	-.672
80	29	.207	.188	1.092	-.522
80	30	.172	.156	.884	-.387
80	31	-.300	.123	.168	-.694
80	32	-.280	.118	.122	-.722
80	101	-.003	.142	.441	-.527
80	102	.293	.243	1.094	-.578
80	103	.210	.195	.786	-.409
80	104	.341	.235	1.071	-.383
80	105	-.028	.129	.433	-.559
80	106	.354	.245	1.180	-.563
80	107	.198	.184	.814	-.533
80	108	-.174	.130	.269	-.637
80	109	.317	.187	1.066	-.278
80	110	.331	.203	1.098	-.223
80	111	.387	.206	1.162	-.203
80	112	.361	.198	1.118	-.243
80	113	-.268	.121	.175	-.816
80	114	-.247	.135	.241	-.921
80	115	-.237	.138	.215	-.862
80	116	-.051	.134	.398	-.639
80	117	.112	.220	.777	-.867
80	118	.134	.163	.684	-.673
80	119	.369	.199	1.186	-.296
80	120	.423	.210	1.247	-.318
80	121	.427	.183	1.102	-.180
80	122	.253	.242	.942	-.903
80	123	-.035	.124	.432	-.437
80	124	-.179	.113	.185	-.534
80	125	-.266	.103	.073	-.657
80	126	-.257	.118	.118	-.705
80	127	.329	.193	1.184	-.237
80	128	.378	.199	1.218	-.207
80	129	.284	.205	.873	-.494
80	130	.142	.155	.678	-.483
80	131	-.116	.117	.379	-.571
80	132	-.247	.117	.203	-.698
80	133	-.273	.105	.052	-.657
80	134	.349	.220	.979	-.379
80	135	.372	.214	1.034	-.254
80	136	.351	.204	.991	-.254
80	137	.240	.156	.725	-.292
80	138	.110	.151	.567	-.504
80	139	-.004	.134	.457	-.570
80	140	-.139	.121	.282	-.588
80	141	-.204	.104	.096	-.576
80	142	.359	.217	1.146	-.493
80	143	.375	.205	1.081	-.464
80	144	.335	.191	.968	-.539
80	145	-.348	.135	.171	-.946
80	146	-.160	.152	.472	-.778
80	147	-.150	.138	.482	-.657
80	148	-.159	.130	.330	-.613
80	149	-.289	.223	.455	-.988
80	150	.014	.159	.633	-.696
80	151	.333	.192	1.156	-.294
80	152	.369	.191	1.237	-.248
80	153	.357	.180	1.001	-.243
80	154	-.114	.236	.659	-1.017
80	155	-.113	.107	.290	-.493
80	156	-.261	.130	.203	-.800
80	157	-.343	.122	.000	-.884
80	158	-.325	.139	.075	-.909
80	159	.278	.176	.895	-.281
80	160	.325	.185	.958	-.151
80	161	.087	.200	.677	-.627
80	162	.072	.137	.536	-.361
80	163	-.136	.114	.225	-.502
80	164	-.276	.122	.064	-.715
80	165	-.302	.103	.059	-.635
80	166	.138	.200	.866	-.512
80	167	.156	.189	.866	-1.041
80	168	.143	.170	.783	-.642
80	169	.083	.133	.535	-.374
80	170	.045	.136	.556	-.432
80	171	-.003	.124	.551	-.442
80	172	-.129	.113	.272	-.573
80	173	-.207	.096	.134	-.535
80	174	-.031	.167	.604	-.778
80	175	.006	.146	.510	-.729
80	176	.005	.111	.369	-.428
80	177	-.052	.100	.298	-.419
80	178	-.079	.112	.308	-.499
80	179	-.213	.117	.236	-.635
80	180	-.222	.114	.174	-.616
80	181	-.091	.102	.223	-.458
80	182	-.060	.094	.260	-.398
80	183	-.128	.120	.220	-.562
80	184	-.074	.113	.300	-.455
80	185	-.047	.093	.295	-.376
80	186	-.039	.105	.345	-.392
80	187	-.084	.112	.346	-.472
80	188	-.048	.114	.459	-.435

APPENDIX A -- PRESSURE DATA: CONFIGURATION A; HOUSTON NATIONAL BANK

WD	TAP	CPMEAN	CPRMS	CPMAX	CPMIN
80	189	-.058	.095	.379	-.348
80	190	-.127	.105	.296	-.436
80	191	-.253	.104	.140	-.586
80	201	-.289	.131	.211	-1.247
80	202	-.282	.118	.119	-.802
80	203	-.270	.136	.212	-.897
80	204	-.335	.141	.186	-.965
80	205	-.291	.141	.221	-1.094
80	206	-.273	.112	.091	-.667
80	207	-.269	.125	.141	-.704
80	208	-.332	.129	.094	-.803
80	209	-.288	.124	.101	-.714
80	210	-.291	.107	.050	-.672
80	211	-.306	.133	.142	-.834
80	212	-.367	.136	.084	-.885
80	213	-.291	.116	.101	-.704
80	214	-.301	.111	.091	-.750
80	215	-.302	.128	.129	-.862
80	216	-.306	.135	.140	-.818
80	217	-.262	.130	.160	-.760
80	218	-.269	.114	.068	-.739
80	219	-.262	.141	.241	-1.097
80	220	-.409	.183	.062	-1.297
80	221	-.339	.160	.135	-1.076
80	222	-.307	.108	.026	-.781
80	223	-.292	.111	.075	-.744
80	224	-.348	.116	.036	-.907
80	225	-.248	.117	.122	-.716
80	226	-.253	.109	.115	-.736
80	227	-.249	.123	.167	-.767
80	228	-.307	.127	.133	-.869
80	229	-.260	.118	.131	-.689
80	230	-.257	.102	.073	-.644
80	231	-.254	.117	.127	-.789
80	232	-.316	.121	.067	-.937
80	233	-.281	.119	.095	-.853
80	234	-.241	.100	.031	-.583
80	235	-.240	.113	.071	-.630
80	236	-.300	.118	.029	-.707
80	237	-.267	.113	.050	-.676
80	238	-.256	.104	.180	-.706
80	239	-.253	.118	.264	-.770
80	240	-.316	.121	.160	-.855
80	241	-.271	.117	.166	-.796
80	242	-.273	.093	.006	-.587
80	243	-.272	.115	.122	-.703
80	244	-.341	.115	.113	-.731
80	245	-.422	.175	.129	-1.277
80	246	-.412	.130	-.082	-.853
80	247	-.368	.141	.021	-1.015
80	248	-.384	.135	.003	-.946
80	249	-.364	.145	.041	-1.071
80	250	-.248	.119	.178	-.660
80	251	-.300	.134	.104	-.841
80	252	-.342	.134	.053	-.904
80	253	-.278	.116	.077	-.708
80	254	-.295	.102	.045	-.681
80	255	-.283	.114	.170	-.791
80	256	-.351	.120	.036	-.824
80	257	-.315	.120	.089	-.771
80	258	-.294	.108	.126	-.843
80	259	-.293	.124	.173	-.929
80	260	-.363	.142	.152	-1.345
80	261	-.315	.122	.159	-.848
80	262	-.271	.101	.053	-.634
80	263	-.309	.114	.063	-.702
80	264	-.337	.116	.045	-.746
80	265	-.336	.116	.129	-.732
80	266	-.272	.095	.050	-.618
80	267	-.327	.116	.017	-.719
80	268	-.365	.119	-.010	-.762
80	269	-.324	.120	.061	-.723
80	270	-.269	.104	.069	-.593
80	271	-.326	.127	.090	-.727
80	272	-.283	.121	.107	-.624
80	273	-.318	.125	.089	-.761
80	274	-.266	.107	.069	-.778
80	275	-.270	.122	.123	-.834
80	276	-.295	.126	.086	-.845
80	277	-.281	.143	.486	-.773
80	278	-.191	.112	.242	-.658
80	279	-.238	.126	.174	-.803
80	280	-.341	.133	.098	-.876
80	281	-.374	.147	.129	-1.002
80	282	-.300	.116	.035	-.828
80	283	-.241	.131	.193	-.770
80	284	-.235	.122	.176	-.748
80	285	-.225	.121	.181	-.773
80	286	-.172	.091	.178	-.479
80	287	-.171	.106	.215	-.574
80	288	-.185	.106	.196	-.589
80	301	-.318	.125	.162	-.878
80	302	-.277	.103	.020	-.731
80	303	-.299	.116	.038	-.821
80	304	-.331	.119	.006	-1.052
80	305	-.323	.119	.023	-.795
80	306	-.292	.102	.016	-.695
80	307	-.300	.122	.074	-.779
80	308	-.306	.125	.073	-.762
80	309	-.313	.120	.099	-.919
80	310	-.295	.109	.082	-.797
80	311	-.315	.122	.132	-.900
80	312	-.316	.118	.153	-.800
80	313	-.305	.121	.200	-.792
80	314	-.265	.101	.109	-.637
80	315	-.283	.117	.142	-.770
80	316	-.298	.120	.142	-.794
80	317	-.372	.133	.051	-.910
80	318	-.299	.125	.059	-.777
80	319	-.315	.136	.151	-.825
80	320	-.324	.138	.161	-.968
80	321	-.317	.138	.215	-.968
80	322	-.278	.109	.090	-.609
80	323	-.238	.100	.092	-.589
80	324	-.379	.142	.035	-1.246
80	325	-.371	.135	.026	-1.030
80	326	-.307	.103	.015	-.717
80	327	-.330	.120	.060	-.859
80	328	-.344	.121	.055	-.775
80	329	-.335	.120	.064	-.708
80	330	-.276	.105	.150	-.656
80	331	-.380	.147	.145	-1.087
80	332	-.395	.143	.125	-1.007
80	333	-.385	.140	.116	-.884
80	334	-.333	.105	.025	-.736
80	335	-.357	.121	.065	-.947
80	336	-.370	.121	.054	-.828
80	337	-.364	.121	.061	-.826
80	338	-.353	.131	.038	-.916
80	339	-.381	.144	.066	-.950
80	340	-.435	.149	.024	-1.113
80	341	-.452	.153	-.009	-1.176
80	342	-.381	.138	.100	-.972
80	343	-.393	.152	.145	-1.080
80	344	-.411	.153	.129	-1.083
80	345	-.240	.130	.258	-.692
80	346	-.200	.108	.132	-.604
80	347	-.278	.146	.178	-.843
80	348	-.404	.169	.126	-1.077
80	349	-.558	.203	.023	-1.664
80	350	-.503	.177	-.046	-1.255
80	351	-.483	.186	.010	-1.249
80	352	-.679	.257	-.136	-2.091
80	353	-.813	.438	-.033	-3.061
80	354	-.333	.127	.056	-.825
80	355	-.339	.139	.104	-.924
80	356	-.185	.113	.173	-.573
80	357	-.159	.113	.191	-.558
80	358	-.176	.101	.185	-.537
80	359	-.185	.116	.216	-.581

APPENDIX A -- PRESSURE DATA: CONFIGURATION A; HOUSTON NATIONAL BANK

WD	TAP	CPMEAN	CPRMS	CPMAX	CPMIN
80	360	-.236	.121	.185	-.650
80	361	-.215	.120	.221	-.625
80	362	-.207	.107	.166	-.617
80	401	-.164	.138	.604	-.636
80	402	-.142	.149	.735	-.679
80	403	.027	.164	.865	-.625
80	404	.133	.210	.870	-1.040
80	405	.150	.294	1.130	-1.252
80	406	-.203	.132	.516	-.738
80	407	-.120	.133	.677	-.737
80	408	.011	.125	.529	-.616
80	409	.059	.246	.905	-1.246
80	410	-.048	.337	1.023	-1.396
80	411	-.191	.134	.526	-.692
80	412	-.125	.110	.391	-.532
80	413	.028	.141	.530	-.773
80	414	-.132	.245	.633	-1.267
80	415	-.206	.293	.917	-1.362
80	416	-.193	.118	.371	-.602
80	417	-.103	.124	.473	-.559
80	418	-.040	.158	.551	-.876
80	419	-.134	.301	.662	-1.531
80	420	-.240	.268	.597	-2.191
80	421	.394	.207	1.248	-.206
80	422	.277	.194	.929	-.437
80	423	.391	.219	1.206	-.674
80	424	.398	.201	1.064	-.299
80	425	-.208	.114	.285	-.643
80	426	-.096	.094	.315	-.377
80	427	-.012	.132	.496	-.655
80	428	-.246	.220	.479	-1.161
80	429	-.274	.223	.579	-1.576
80	430	.351	.204	1.283	-.369
80	431	.325	.187	1.139	-.465
80	432	.331	.190	1.026	-.363
80	433	.364	.230	1.338	-.595
80	434	.223	.181	.973	-.277
80	435	.226	.168	.880	-.320
80	436	.296	.189	.928	-.399
80	437	.321	.249	1.108	-.596
80	438	-.276	.120	.101	-.697
80	439	-.178	.116	.206	-.586
80	440	-.042	.108	.427	-.438
80	441	-.090	.201	.557	-1.107
80	442	.130	.180	.800	-.761
80	443	.266	.195	.991	-1.308
80	444	.243	.237	1.054	-1.432
80	445	.395	.220	1.230	-.316
80	446	.341	.236	1.083	-.436
80	447	.318	.232	1.033	-.597

WD	TAP	CPMEAN	CPRMS	CPMAX	CPMIN
80	448	-.258	.114	.201	-.692
80	449	-.168	.108	.247	-.546
80	450	-.106	.125	.422	-.531
80	451	-.015	.128	.423	-.464
80	452	.044	.117	.455	-.298
80	453	.045	.245	.804	-1.056
80	454	-.060	.247	.806	-.917
80	455	.296	.208	1.207	-.208
80	456	.313	.186	.918	-.363
80	457	.318	.215	1.162	-.530
80	458	.204	.187	.876	-.348
80	459	.256	.190	.898	-.305
80	460	.254	.195	.997	-.524
80	461	-.256	.131	.208	-.847
80	462	-.239	.127	.239	-.755
80	463	-.086	.118	.390	-.588
80	464	-.027	.098	.408	-.358
80	465	-.008	.124	.521	-.458
80	466	-.037	.171	.846	-.800
80	467	.152	.185	.964	-.402
80	468	.167	.162	.689	-.573
80	469	-.293	.135	.102	-.808
80	470	-.204	.121	.165	-.659
80	471	-.090	.110	.240	-.515
80	472	-.040	.086	.235	-.380
80	473	-.027	.109	.326	-.432
80	474	.016	.119	.423	-.388
80	475	.063	.132	.678	-.347
80	476	.088	.126	.636	-.335
80	477	-.324	.142	.076	-.912
80	478	-.185	.109	.228	-.523
80	479	-.064	.106	.324	-.403
80	480	-.005	.095	.336	-.303
80	481	.023	.122	.487	-.374
80	483	.013	.121	.506	-.364
80	484	-.003	.093	.355	-.301
80	485	-.107	.112	.309	-.519
80	486	-.024	.103	.361	-.373
80	501	-.038	.106	.344	-.502
80	502	-.036	.109	.319	-.594
80	503	-.064	.108	.250	-.514
80	504	-.029	.111	.362	-.685
80	505	-.037	.101	.314	-.526
80	506	-.033	.106	.326	-.409
80	507	-.038	.111	.344	-.434
80	508	-.069	.114	.325	-.451
80	509	-.032	.086	.281	-.358
80	510	-.032	.102	.356	-.424
80	511	-.037	.100	.340	-.399
80	512	-.024	.101	.364	-.388

WD	TAP	CPMEAN	CPRMS	CPMAX	CPMIN
80	601	-.018	.119	.402	-.470
80	602	-.004	.109	.500	-.371
80	603	-.043	.101	.285	-.412
80	604	-.082	.112	.327	-.488
80	605	-.137	.117	.267	-.586
80	606	-.025	.099	.326	-.349
80	607	-.001	.118	.426	-.366
80	608	-.157	.114	.240	-.540
80	609	-.001	.112	.471	-.505
80	610	.059	.121	.497	-.325
80	611	.012	.120	.392	-.381
80	612	-.082	.111	.311	-.453
80	613	-.136	.108	.228	-.560
80	614	.032	.109	.365	-.350
80	615	-.143	.120	.258	-.582
80	701	-.220	.144	.192	-1.174
80	702	-.205	.118	.180	-.667
80	703	-.193	.129	.239	-.802
80	704	-.216	.134	.237	-.797
80	705	-.165	.112	.218	-.753
80	706	-.145	.100	.188	-.556
80	707	-.159	.121	.224	-.631
80	708	-.268	.118	.119	-.708
80	709	-.174	.111	.180	-.541
80	710	-.172	.096	.134	-.589
80	711	-.123	.107	.280	-.591
80	712	-.164	.112	.218	-.704
80	801	-.107	.101	.263	-.461
80	802	-.083	.105	.277	-.460
80	803	-.076	.110	.353	-.476
80	804	-.013	.119	.542	-.431
80	805	.037	.135	.724	-.436
80	806	-.109	.116	.253	-.568
80	807	-.074	.120	.321	-.556
80	808	.023	.147	.678	-.857
80	809	-.120	.102	.254	-.560
80	810	-.091	.103	.301	-.464
80	811	-.111	.118	.355	-.611
80	812	-.046	.102	.349	-.423
80	813	.017	.111	.574	-.341
80	814	-.104	.104	.256	-.491
80	815	-.102	.103	.249	-.447
80	816	-.079	.108	.267	-.457
80	817	-.077	.091	.195	-.424
80	818	.004	.129	.507	-.469
80	819	-.117	.112	.246	-.504
80	820	-.074	.112	.293	-.492
80	821	-.081	.099	.255	-.454
80	822	-.047	.107	.323	-.399
80	823	.012	.130	.572	-.380

APPENDIX A -- PRESSURE DATA: CONFIGURATION A: HOUSTON NATIONAL BANK

WD	TAP	CPMEAN	CPRMS	CPMAX	CPMIN
80	901	-.111	.117	.276	-.555
80	902	-.147	.121	.226	-.563
80	903	-.161	.096	.125	-.529
80	904	-.119	.110	.230	-.535
80	905	-.120	.105	.198	-.517
80	906	-.046	.110	.347	-.496
80	907	-.089	.100	.284	-.508
80	908	-.048	.111	.402	-.454
80	909	.004	.114	.485	-.412
80	910	-.025	.111	.416	-.373
80	911	.071	.137	.566	-.319
80	912	.098	.162	.850	-.384
80	913	.013	.157	.841	-.459
80	914	-.027	.123	.497	-.489
80	915	-.025	.107	.334	-.363
90	1	-.390	.165	.097	-1.118
90	2	-.293	.109	.106	-.671
90	3	-.118	.208	.883	-1.013
90	4	-.042	.187	.611	-.868
90	5	-.351	.136	.158	-1.069
90	6	-.305	.106	.037	-.720
90	7	-.050	.169	.698	-.694
90	8	.001	.171	.734	-.568
90	9	-.316	.107	.040	-.682
90	10	-.322	.116	.034	-.875
90	11	-.228	.145	.324	-.686
90	12	-.195	.147	.404	-.804
90	13	.230	.192	1.135	-.291
90	14	.179	.155	.799	-.286
90	15	-.288	.133	.166	-.804
90	16	-.301	.126	.128	-.785
90	17	.171	.170	.861	-.325
90	18	.162	.155	.687	-.294
90	19	-.274	.131	.178	-.772
90	20	-.275	.124	.121	-.705
90	21	.103	.214	1.112	-.735
90	22	.103	.194	.864	-.553
90	23	-.274	.130	.158	-.815
90	24	-.278	.125	.119	-.851
90	25	.097	.166	.968	-.334
90	26	.156	.164	.920	-.314
90	27	-.285	.120	.102	-.768
90	28	-.280	.114	.127	-.708
90	29	.029	.175	.801	-.448
90	30	-.009	.151	.623	-.440
90	31	-.295	.130	.090	-.900
90	32	-.270	.117	.115	-.726
90	101	-.145	.156	.407	-.723
90	102	.005	.313	1.087	-1.445
90	103	.007	.227	.936	-.869
90	104	.058	.297	1.117	-.975
90	105	-.156	.131	.271	-.652
90	106	.085	.259	1.004	-.808
90	107	.013	.184	.709	-.578
90	108	-.227	.137	.286	-.665
90	109	.078	.183	.768	-.481
90	110	.135	.193	.903	-.526
90	111	.160	.194	.975	-.374
90	112	.142	.186	1.012	-.483
90	113	-.268	.135	.187	-1.106
90	114	-.262	.149	.205	-.991
90	115	-.247	.147	.190	-.934
90	116	-.155	.169	.397	-1.126
90	117	-.149	.271	.678	-1.128
90	118	-.060	.221	.604	-.965
90	119	.220	.184	1.057	-.549
90	120	.247	.190	1.294	-.527
90	121	.232	.159	.852	-.242
90	122	-.093	.318	.886	-1.161
90	123	-.139	.147	.450	-.919
90	124	-.184	.125	.214	-.618
90	125	-.277	.115	.043	-.823
90	126	-.266	.133	.096	-.880
90	127	.221	.175	.862	-.531
90	128	.249	.182	.940	-.302
90	129	-.050	.273	.714	-1.599
90	130	-.028	.183	.712	-.766
90	131	-.166	.123	.277	-.565
90	132	-.260	.121	.156	-.719
90	133	-.278	.107	.067	-.622
90	134	.022	.283	1.227	-.946
90	135	.070	.253	1.354	-1.002
90	136	.074	.233	1.270	-.984
90	137	.000	.170	.617	-.845
90	138	-.054	.161	.514	-.734
90	139	-.112	.141	.372	-.627
90	140	-.193	.125	.253	-.659
90	141	-.218	.109	.207	-.608
90	142	.117	.220	1.076	-1.108
90	143	.149	.207	1.057	-.655
90	144	.151	.190	1.008	-.573
90	145	-.296	.121	.059	-.897
90	146	-.228	.131	.400	-.746
90	147	-.210	.126	.331	-.752
90	148	-.229	.143	.196	-.728
90	149	-.364	.161	.192	-.891
90	150	-.174	.164	.453	-.835
90	151	.101	.157	.734	-.364
90	152	.114	.159	.822	-.302
90	153	.176	.164	.763	-.272
90	154	-.261	.231	.698	-1.136
90	155	-.166	.118	.283	-.698
90	156	-.246	.121	.139	-.720
90	157	-.267	.107	.157	-.807
90	158	-.257	.124	.159	-.877
90	159	.101	.142	.921	-.299
90	160	.123	.154	1.051	-.274
90	161	-.200	.189	.610	-.878
90	162	-.102	.135	.431	-.586
90	163	-.177	.105	.181	-.569
90	164	-.241	.103	.118	-.639
90	165	-.267	.103	.029	-.690
90	166	-.085	.212	.857	-.774
90	167	-.042	.193	.836	-.689
90	168	-.028	.172	.792	-.537
90	169	-.048	.129	.423	-.443
90	170	-.058	.136	.430	-.516
90	171	-.078	.127	.328	-.501
90	172	-.150	.117	.267	-.522
90	173	-.194	.093	.127	-.525
90	174	-.083	.141	.542	-.650
90	175	-.047	.126	.512	-.554
90	176	-.043	.110	.437	-.513
90	177	-.084	.098	.260	-.400
90	178	-.095	.109	.257	-.500
90	179	-.201	.114	.210	-.668
90	180	-.195	.112	.213	-.568
90	181	-.140	.101	.190	-.576
90	182	-.106	.089	.204	-.415
90	183	-.159	.115	.249	-.661
90	184	-.115	.111	.268	-.580
90	185	-.095	.098	.227	-.513
90	186	-.080	.109	.275	-.536
90	187	-.124	.115	.379	-.598
90	188	-.092	.113	.448	-.562
90	189	-.115	.091	.178	-.417
90	190	-.148	.105	.170	-.506
90	191	-.244	.105	.086	-.582
90	201	-.305	.140	.101	-1.326
90	202	-.318	.124	.048	-.897
90	203	-.298	.133	.136	-.901
90	204	-.367	.132	.043	-.861
90	205	-.331	.133	.083	-.858
90	206	-.325	.112	.105	-.786
90	207	-.313	.125	.174	-.756
90	208	-.371	.125	.060	-.869
90	209	-.320	.123	.065	-.799
90	210	-.313	.109	.062	-.709
90	211	-.337	.142	.136	-.889
90	212	-.398	.147	.060	-.948

APPENDIX A -- PRESSURE DATA: CONFIGURATION A; HOUSTON NATIONAL BANK

WD	TAP	CPMEAN	CPRMS	CPMAX	CPMIN
90	213	-.296	.118	.137	-.757
90	214	-.309	.104	.024	-.694
90	215	-.306	.120	.049	-.793
90	216	-.311	.149	.182	-1.118
90	217	-.265	.141	.206	-.946
90	218	-.267	.124	.184	-.717
90	219	-.253	.157	.264	-1.511
90	220	-.340	.157	.128	-1.397
90	221	-.292	.147	.154	-1.249
90	222	-.318	.110	.036	-.766
90	223	-.306	.121	.066	-.948
90	224	-.367	.131	.059	-1.079
90	225	-.262	.135	.237	-.834
90	226	-.277	.117	.086	-.706
90	227	-.259	.132	.159	-.770
90	228	-.323	.137	.119	-.844
90	229	-.278	.125	.092	-.813
90	230	-.268	.105	.052	-.649
90	231	-.247	.115	.137	-.701
90	232	-.317	.121	.130	-.771
90	233	-.289	.123	.168	-.710
90	234	-.251	.106	.109	-.628
90	235	-.242	.119	.168	-.678
90	236	-.296	.122	.099	-.743
90	237	-.269	.120	.088	-.755
90	238	-.253	.106	.122	-.678
90	239	-.245	.120	.171	-.734
90	240	-.307	.124	.085	-.836
90	241	-.260	.117	.128	-.789
90	242	-.251	.097	.087	-.638
90	243	-.281	.110	.110	-.706
90	244	-.322	.121	.103	-.725
90	245	-.350	.158	.135	-.956
90	246	-.333	.110	.022	-.753
90	247	-.307	.147	.319	-1.046
90	248	-.323	.136	.347	-.829
90	249	-.280	.132	.357	-.808
90	250	-.268	.121	.095	-.752
90	251	-.275	.128	.095	-.979
90	252	-.321	.127	.059	-.906
90	253	-.268	.113	.091	-.693
90	254	-.254	.095	.063	-.555
90	255	-.245	.107	.097	-.613
90	256	-.319	.114	.037	-.697
90	257	-.287	.115	.074	-.675
90	258	-.255	.100	.054	-.600
90	259	-.246	.112	.105	-.638
90	260	-.305	.121	.085	-.771
90	261	-.240	.108	.101	-.606
90	262	-.217	.099	.103	-.564
90	263	-.254	.114	.129	-.639
90	264	-.276	.115	.130	-.636
90	265	-.273	.113	.134	-.625
90	266	-.232	.098	.145	-.580
90	267	-.275	.120	.177	-.729
90	268	-.307	.122	.174	-.766
90	269	-.248	.118	.160	-.707
90	270	-.212	.096	.150	-.532
90	271	-.263	.116	.191	-.680
90	272	-.224	.108	.144	-.623
90	273	-.265	.113	.177	-.669
90	274	-.229	.089	.033	-.584
90	275	-.232	.105	.094	-.607
90	276	-.254	.107	.081	-.638
90	277	-.213	.121	.250	-.708
90	278	-.161	.099	.165	-.493
90	279	-.219	.106	.167	-.565
90	280	-.291	.120	.147	-.931
90	281	-.290	.118	.108	-.880
90	282	-.261	.101	.052	-1.077
90	283	-.218	.115	.193	-.668
90	284	-.214	.111	.145	-.655
90	285	-.227	.106	.141	-.568
90	286	-.194	.091	.068	-.555
90	287	-.194	.104	.104	-.616
90	288	-.212	.104	.085	-.619
90	301	-.342	.139	.044	-1.236
90	302	-.309	.128	.108	-1.030
90	303	-.324	.147	.085	-.982
90	304	-.367	.149	.058	-.966
90	305	-.347	.151	.077	-.942
90	306	-.314	.120	-.006	-.957
90	307	-.319	.137	.092	-1.141
90	308	-.334	.138	.078	-1.019
90	309	-.370	.154	.107	-1.146
90	310	-.338	.146	.029	-1.137
90	311	-.352	.154	.065	-1.034
90	312	-.367	.150	.098	-1.199
90	313	-.360	.154	.111	-1.066
90	314	-.293	.122	.065	-.801
90	315	-.308	.140	.114	-1.018
90	316	-.334	.148	.127	-1.423
90	317	-.371	.163	.083	-1.144
90	318	-.325	.135	.069	-1.001
90	319	-.332	.136	.100	-.854
90	320	-.355	.143	.088	-.936
90	321	-.347	.144	.095	-.962
90	322	-.336	.142	.233	-1.013
90	323	-.314	.138	.115	-1.335
90	324	-.392	.152	.070	-1.170
90	325	-.380	.144	.072	-1.072
90	326	-.306	.112	.040	-.836
90	327	-.337	.133	.120	-.874
90	328	-.360	.135	.114	-.900
90	329	-.345	.131	.144	-1.046
90	330	-.292	.105	.032	-.824
90	331	-.328	.135	.068	-.991
90	332	-.349	.133	.060	-.959
90	333	-.357	.132	.070	-.829
90	334	-.320	.116	.020	-1.012
90	335	-.351	.137	.074	-1.103
90	336	-.368	.139	.068	-1.371
90	337	-.359	.137	.082	-1.291
90	338	-.267	.105	.072	-.683
90	339	-.293	.121	.085	-.765
90	340	-.345	.133	.051	-.873
90	341	-.365	.136	.075	-1.175
90	342	-.327	.113	.001	-.858
90	343	-.354	.131	.033	-1.021
90	344	-.378	.132	.017	-1.025
90	345	-.241	.107	.083	-.635
90	346	-.183	.089	.111	-.492
90	347	-.235	.111	.152	-.600
90	348	-.316	.123	.097	-.818
90	349	-.375	.136	.046	-1.309
90	350	-.400	.132	.025	-1.265
90	351	-.372	.141	.079	-1.164
90	352	-.456	.166	.009	-1.422
90	353	-.532	.248	.126	-1.855
90	354	-.294	.107	.052	-.735
90	355	-.270	.117	.117	-.752
90	356	-.232	.112	.139	-.619
90	357	-.192	.110	.172	-.563
90	358	-.214	.094	.093	-.541
90	359	-.197	.104	.124	-.548
90	360	-.256	.108	.081	-.619
90	361	-.215	.107	.134	-.595
90	362	-.221	.099	.136	-.593
90	401	-.076	.205	.968	-.771
90	402	-.055	.233	1.357	-.991
90	403	.035	.211	1.202	-.752
90	404	.112	.214	1.403	-.873
90	405	.127	.262	1.331	-1.369
90	406	-.155	.193	.703	-.773
90	407	-.052	.199	.787	-.684
90	408	.078	.181	.823	-.496
90	409	.111	.205	.958	-1.148
90	410	.038	.251	1.116	-1.426
90	411	-.109	.212	.940	-.809
90	412	-.032	.193	.794	-.739

APPENDIX A -- PRESSURE DATA: CONFIGURATION A: HOUSTON NATIONAL BANK

WD	TAP	CPMEAN	CPRMS	CPMAX	CPMIN
90	413	.103	.205	1.300	-.490
90	414	.042	.234	.943	-1.333
90	415	.034	.287	1.191	-1.478
90	416	-.129	.159	.502	-.606
90	417	-.050	.180	.836	-.714
90	418	.034	.179	.909	-.553
90	419	.045	.228	.785	-1.097
90	420	.011	.246	.861	-1.566
90	421	.233	.202	1.084	-.501
90	422	.152	.203	1.010	-.625
90	423	.234	.246	1.107	-.977
90	424	.199	.257	1.040	-.888
90	425	-.163	.151	.477	-.799
90	426	-.049	.126	.529	-.490
90	427	.044	.165	.724	-.763
90	428	-.062	.245	.769	-1.594
90	429	-.068	.281	.830	-1.520
90	430	.213	.210	1.330	-.469
90	431	.200	.196	1.052	-.362
90	432	.196	.198	1.011	-.761
90	433	.198	.247	1.173	-1.047
90	434	.137	.183	1.082	-.440
90	435	.158	.172	1.037	-.357
90	436	.160	.177	.965	-.718
90	437	.133	.226	1.272	-.909
90	438	-.265	.140	.240	-.809
90	439	-.150	.134	.361	-.668
90	440	-.045	.110	.443	-.390
90	441	-.026	.176	.574	-.982
90	442	.047	.179	.797	-.708
90	443	.146	.188	.875	-.682
90	444	.128	.198	.834	-1.042
90	445	.197	.202	1.071	-.368
90	446	.139	.223	.990	-.753
90	447	.113	.224	1.001	-.731
90	448	-.247	.114	.138	-.719
90	449	-.158	.117	.447	-.604
90	450	-.117	.122	.310	-.798
90	451	-.039	.122	.369	-.464
90	452	-.024	.115	.409	-.373
90	453	.015	.205	.729	-1.423
90	454	-.062	.231	.658	-1.327
90	455	.126	.178	.906	-.421
90	456	.054	.167	.716	-.600
90	457	.054	.196	.885	-.800
90	458	.011	.168	.965	-.486
90	459	.049	.171	.752	-.504
90	460	.047	.162	.633	-.592
90	461	-.229	.128	.181	-.804
90	462	-.228	.125	.145	-.748

WD	TAP	CPMEAN	CPRMS	CPMAX	CPMIN
90	463	-.097	.116	.239	-.491
90	464	-.046	.086	.236	-.328
90	465	-.064	.106	.290	-.422
90	466	-.065	.125	.411	-.571
90	467	-.014	.149	.582	-.764
90	468	.052	.143	.648	-.665
90	469	-.231	.133	.258	-.709
90	470	-.172	.124	.279	-.562
90	471	-.096	.117	.362	-.433
90	472	-.052	.090	.221	-.398
90	473	-.073	.110	.260	-.465
90	474	-.056	.115	.288	-.480
90	475	-.015	.132	.603	-.563
90	476	.003	.113	.493	-.353
90	477	-.240	.124	.157	-.735
90	478	-.154	.113	.223	-.524
90	479	-.077	.110	.318	-.433
90	480	-.028	.093	.309	-.331
90	481	-.036	.113	.390	-.388
90	483	-.060	.113	.359	-.422
90	484	-.055	.093	.353	-.504
90	485	-.105	.116	.260	-.511
90	486	-.069	.108	.334	-.428
90	501	-.102	.103	.265	-.491
90	502	-.079	.105	.268	-.469
90	503	-.106	.103	.234	-.622
90	504	-.068	.104	.284	-.487
90	505	-.092	.095	.248	-.406
90	506	-.071	.101	.271	-.390
90	507	-.078	.108	.247	-.420
90	508	-.083	.104	.260	-.405
90	509	-.089	.091	.200	-.418
90	510	-.079	.102	.256	-.462
90	511	-.085	.101	.244	-.453
90	512	-.063	.103	.268	-.426
90	601	-.074	.111	.353	-.495
90	602	-.078	.101	.310	-.458
90	603	-.076	.108	.353	-.396
90	604	-.104	.110	.263	-.482
90	605	-.114	.115	.261	-.480
90	606	-.084	.098	.249	-.424
90	607	-.054	.112	.489	-.424
90	608	-.157	.113	.234	-.565
90	609	-.057	.109	.316	-.435
90	610	-.033	.101	.384	-.403
90	611	-.038	.106	.332	-.410
90	612	-.101	.106	.240	-.540
90	613	-.119	.105	.211	-.567
90	614	.013	.112	.382	-.435
90	615	-.118	.119	.360	-.566

WD	TAP	CPMEAN	CPRMS	CPMAX	CPMIN
90	701	-.123	.113	.280	-.507
90	702	-.156	.099	.316	-.539
90	703	-.136	.109	.260	-.533
90	704	-.157	.108	.231	-.552
90	705	-.144	.103	.192	-.521
90	706	-.140	.096	.168	-.496
90	707	-.128	.113	.260	-.499
90	708	-.234	.114	.134	-.699
90	709	-.168	.111	.208	-.614
90	710	-.176	.094	.138	-.496
90	711	-.120	.102	.229	-.466
90	712	-.153	.109	.244	-.517
90	801	-.106	.104	.249	-.562
90	802	-.089	.105	.292	-.549
90	803	-.090	.109	.314	-.559
90	804	-.058	.113	.310	-.544
90	805	-.045	.105	.436	-.400
90	806	-.087	.117	.338	-.457
90	807	-.081	.108	.355	-.409
90	808	-.040	.115	.417	-.428
90	809	-.104	.102	.208	-.490
90	810	-.094	.107	.246	-.496
90	811	-.090	.115	.353	-.494
90	812	-.069	.106	.254	-.462
90	813	-.059	.103	.281	-.415
90	814	-.088	.104	.272	-.469
90	815	-.117	.101	.221	-.481
90	816	-.081	.107	.302	-.467
90	817	-.108	.086	.200	-.380
90	818	-.061	.114	.347	-.414
90	819	-.106	.111	.391	-.486
90	820	-.093	.107	.304	-.471
90	821	-.097	.098	.261	-.438
90	822	-.080	.104	.262	-.430
90	823	-.089	.110	.337	-.446
90	901	-.114	.111	.273	-.562
90	902	-.113	.114	.248	-.556
90	903	-.146	.100	.185	-.554
90	904	-.107	.113	.284	-.527
90	905	-.117	.107	.276	-.494
90	906	-.065	.109	.323	-.438
90	907	-.095	.107	.274	-.488
90	908	-.065	.122	.415	-.465
90	909	-.048	.117	.387	-.408
90	910	-.051	.114	.364	-.425
90	911	-.048	.098	.312	-.386
90	912	-.026	.116	.464	-.427
90	913	-.076	.112	.371	-.542
90	914	-.078	.108	.326	-.492
90	915	-.080	.105	.290	-.500

APPENDIX A -- PRESSURE DATA: CONFIGURATION A: HOUSTON NATIONAL BANK

WD	TAP	CPMEAN	CPRMS	CPMAX	CPMIN	WD	TAP	CPMEAN	CPRMS	CPMAX	CPMIN	WD	TAP	CPMEAN	CPRMS	CPMAX	CPMIN
100	1	-.391	.154	.040	-1.196	100	119	.227	.184	1.056	-.503	100	169	-.184	.106	.186	-.554
100	2	-.326	.115	.047	-.759	100	120	.238	.186	1.084	-.717	100	170	-.161	.108	.232	-.520
100	3	-.068	.163	.494	-.893	100	121	.245	.164	.890	-.288	100	171	-.150	.104	.270	-.536
100	4	.026	.166	.616	-1.176	100	122	-.416	.255	.691	-1.484	100	172	-.184	.104	.245	-.683
100	5	-.351	.125	.062	-.864	100	123	-.274	.169	.214	-1.073	100	173	-.223	.093	.082	-.568
100	6	-.311	.103	.050	-.719	100	124	-.228	.124	.163	-.794	100	174	-.205	.114	.199	-.628
100	7	.108	.199	.873	-.578	100	125	-.321	.115	.021	-1.032	100	175	-.173	.111	.243	-.578
100	8	.191	.203	.980	-.483	100	126	-.310	.132	.094	-1.140	100	176	-.143	.104	.227	-.499
100	9	-.327	.109	.011	-.846	100	127	.289	.182	1.068	-.323	100	177	-.179	.095	.239	-.504
100	10	-.327	.107	.059	-.901	100	128	.309	.186	1.056	-.314	100	178	-.161	.105	.256	-.562
100	11	-.132	.143	.540	-.798	100	129	-.387	.226	.519	-1.196	100	179	-.222	.110	.173	-.655
100	12	-.113	.149	.494	-.712	100	130	-.244	.205	.383	-1.100	100	180	-.202	.108	.148	-.611
100	13	.266	.175	.995	-.285	100	131	-.242	.136	.242	-.797	100	181	-.223	.103	.129	-.632
100	14	.176	.141	.789	-.236	100	132	-.299	.127	.173	-.793	100	182	-.191	.091	.121	-.511
100	15	-.317	.128	.117	-.756	100	133	-.340	.113	-.023	-.801	100	183	-.232	.116	.153	-.661
100	16	-.347	.128	.040	-.832	100	134	-.357	.270	.592	-1.509	100	184	-.193	.112	.194	-.614
100	17	.241	.181	1.092	-.269	100	135	-.256	.243	.613	-1.656	100	185	-.151	.085	.156	-.494
100	18	.178	.145	.842	-.347	100	136	-.236	.236	.576	-1.752	100	186	-.132	.095	.210	-.515
100	19	-.300	.132	.169	-.798	100	137	-.250	.196	.282	-1.087	100	187	-.174	.098	.159	-.571
100	20	-.320	.127	.163	-.767	100	138	-.201	.167	.259	-.901	100	188	-.141	.097	.198	-.511
100	21	-.034	.168	.788	-.873	100	139	-.199	.131	.194	-.675	100	189	-.152	.091	.180	-.453
100	22	-.027	.147	.634	-.581	100	140	-.254	.122	.107	-.717	100	190	-.153	.106	.251	-.506
100	23	-.311	.145	.205	-.960	100	141	-.276	.102	.061	-.681	100	191	-.214	.105	.168	-.558
100	24	-.324	.134	.209	-.833	100	142	-.096	.206	.713	-1.189	100	201	-.319	.148	.194	-.982
100	25	.072	.150	.770	-.373	100	143	-.044	.200	.700	-1.049	100	202	-.324	.117	.020	-.934
100	26	.127	.150	.840	-.304	100	144	.028	.168	.759	-.645	100	203	-.295	.118	.105	-.865
100	27	-.305	.116	.069	-.844	100	145	-.307	.126	.102	-1.223	100	204	-.343	.123	.132	-.858
100	28	-.321	.113	.052	-.862	100	146	-.288	.139	.216	-.935	100	205	-.308	.122	.177	-.811
100	29	-.041	.141	.657	-.488	100	147	-.267	.134	.236	-.851	100	206	-.363	.118	.074	-.859
100	30	-.043	.127	.550	-.449	100	148	-.329	.159	.151	-1.101	100	207	-.345	.129	.141	-.853
100	31	-.311	.133	.172	-.965	100	149	-.474	.143	.012	-1.070	100	208	-.380	.122	.064	-.789
100	32	-.310	.131	.138	-.842	100	150	-.338	.173	.279	-1.053	100	209	-.320	.119	.072	-.775
100	101	-.296	.148	.195	-.970	100	151	.062	.141	.742	-.553	100	210	-.324	.108	.018	-.809
100	102	-.388	.284	.715	-1.693	100	152	.064	.141	.716	-.603	100	211	-.357	.145	.080	-.946
100	103	-.245	.206	.484	-1.126	100	153	.126	.153	.736	-.345	100	212	-.409	.148	.029	-1.038
100	104	-.359	.286	.662	-1.478	100	154	-.478	.194	.122	-1.361	100	213	-.309	.112	.030	-.678
100	105	-.285	.130	.117	-.816	100	155	-.270	.129	.142	-.915	100	214	-.324	.100	-.002	-.695
100	106	-.230	.229	.535	-1.063	100	156	-.282	.127	.213	-.964	100	215	-.318	.118	.036	-.770
100	107	-.166	.173	.314	-.866	100	157	-.315	.114	.033	-.742	100	216	-.349	.152	.153	-1.125
100	108	-.268	.125	.107	-.783	100	158	-.308	.132	.100	-.870	100	217	-.299	.140	.118	-.952
100	109	-.089	.171	.556	-.678	100	159	.027	.129	.762	-.485	100	218	-.313	.134	.094	-.874
100	110	.081	.168	.783	-.587	100	160	.063	.140	.845	-.419	100	219	-.293	.159	.189	-.925
100	111	.090	.172	.779	-.663	100	161	-.456	.157	-.035	-1.175	100	220	-.362	.141	.089	-.967
100	112	.075	.178	.726	-.686	100	162	-.244	.130	.152	-.984	100	221	-.321	.133	.100	-.821
100	113	-.292	.119	.171	-.976	100	163	-.245	.120	.188	-.763	100	222	-.325	.097	-.052	-.681
100	114	-.292	.134	.233	-.880	100	164	-.290	.120	.113	-.817	100	223	-.313	.113	.042	-.772
100	115	-.279	.135	.228	-.873	100	165	-.305	.111	.035	-.840	100	224	-.373	.123	.029	-.820
100	116	-.296	.181	.297	-1.285	100	166	-.344	.178	.322	-1.172	100	225	-.301	.141	.162	-.862
100	117	-.400	.209	.332	-1.211	100	167	-.297	.173	.204	-1.129	100	226	-.313	.125	.047	-1.177
100	118	-.302	.231	.417	-1.423	100	168	-.274	.167	.195	-1.031	100	227	-.285	.126	.094	-.975

APPENDIX A -- PRESSURE DATA: CONFIGURATION A: HOUSTON NATIONAL BANK

WD	TAP	CPMEAN	CPRMS	CPMAX	CPMIN
100	228	-.342	.127	.055	-.950
100	229	-.307	.118	.066	-.886
100	230	-.302	.098	-.018	-.698
100	231	-.280	.107	.049	-.691
100	232	-.355	.117	.009	-.914
100	233	-.339	.124	.087	-.898
100	234	-.311	.122	.062	-1.010
100	235	-.294	.134	.125	-.999
100	236	-.331	.130	.064	-.855
100	237	-.308	.127	.077	-.879
100	238	-.300	.106	.021	-.725
100	239	-.291	.121	.074	-.798
100	240	-.350	.120	.014	-.873
100	241	-.290	.110	.056	-.689
100	242	-.289	.095	.006	-.632
100	243	-.318	.120	.097	-.825
100	244	-.373	.140	.127	-1.091
100	245	-.349	.144	.177	-1.027
100	246	-.323	.094	-.009	-.738
100	247	-.304	.133	.066	-1.022
100	248	-.348	.132	.023	-.868
100	249	-.299	.124	.050	-.744
100	250	-.270	.115	.168	-.636
100	251	-.270	.107	.074	-.701
100	252	-.314	.108	.033	-.770
100	253	-.268	.099	.052	-.640
100	254	-.269	.099	.154	-.688
100	255	-.259	.113	.194	-.696
100	256	-.325	.126	.132	-.822
100	257	-.294	.130	.151	-.771
100	258	-.294	.104	.048	-.716
100	259	-.273	.115	.107	-.719
100	260	-.323	.114	.031	-.700
100	261	-.233	.101	.108	-.583
100	262	-.223	.097	.081	-.647
100	263	-.275	.113	.053	-.806
100	264	-.297	.115	.064	-.855
100	265	-.281	.113	.116	-.804
100	266	-.246	.098	.048	-.586
100	267	-.272	.120	.116	-.794
100	268	-.301	.123	.093	-.796
100	269	-.244	.115	.151	-.687
100	270	-.200	.094	.120	-.629
100	271	-.243	.109	.161	-.684
100	272	-.246	.105	.142	-.738
100	273	-.284	.109	.076	-.742
100	274	-.250	.103	.078	-.602
100	275	-.265	.122	.111	-.793
100	276	-.292	.125	.093	-.875
100	277	-.199	.114	.155	-.603
100	278	-.174	.093	.159	-.507
100	279	-.249	.109	.114	-.611
100	280	-.221	.108	.131	-.552
100	281	-.224	.123	.187	-.634
100	282	-.190	.104	.149	-.612
100	283	-.179	.113	.207	-.524
100	284	-.221	.116	.199	-.601
100	285	-.247	.113	.112	-.599
100	286	-.252	.093	.087	-.574
100	287	-.265	.114	.178	-.831
100	288	-.290	.115	.168	-.784
100	301	-.348	.131	.082	-.955
100	302	-.324	.129	.059	-1.098
100	303	-.341	.147	.120	-1.350
100	304	-.403	.164	.057	-1.788
100	305	-.360	.152	.106	-1.688
100	306	-.370	.135	.108	-1.062
100	307	-.359	.143	.072	-1.084
100	308	-.374	.142	.044	-1.202
100	309	-.410	.166	.086	-1.277
100	310	-.406	.167	.068	-1.305
100	311	-.418	.174	.133	-1.348
100	312	-.435	.172	.260	-1.221
100	313	-.419	.169	.080	-1.205
100	314	-.343	.129	.053	-1.413
100	315	-.360	.147	.072	-1.372
100	316	-.400	.162	.063	-1.538
100	317	-.441	.201	.095	-1.893
100	318	-.395	.160	.020	-1.077
100	319	-.423	.172	.101	-1.202
100	320	-.478	.174	.094	-1.265
100	321	-.474	.173	.044	-1.345
100	322	-.420	.151	.013	-1.601
100	323	-.389	.135	-.021	-1.202
100	324	-.410	.191	.165	-1.633
100	325	-.398	.177	.183	-1.514
100	326	-.380	.159	.104	-1.370
100	327	-.461	.194	.132	-1.361
100	328	-.528	.207	.061	-1.950
100	329	-.529	.206	-.022	-1.941
100	330	-.457	.161	-.061	-1.560
100	331	-.271	.130	.146	-.780
100	332	-.299	.135	.136	-.827
100	333	-.318	.150	.190	-1.095
100	334	-.346	.139	.059	-.950
100	335	-.432	.179	.066	-1.280
100	336	-.542	.211	-.032	-1.920
100	337	-.535	.204	-.055	-1.708
100	338	-.246	.098	.084	-.644
100	339	-.266	.117	.116	-.746
100	340	-.315	.125	.128	-.794
100	341	-.340	.130	.206	-.859
100	342	-.349	.130	.074	-.903
100	343	-.453	.168	.087	-1.235
100	344	-.496	.171	.061	-1.879
100	345	-.268	.107	.137	-.657
100	346	-.224	.092	.074	-.598
100	347	-.253	.114	.108	-.762
100	348	-.314	.118	.053	-.725
100	349	-.350	.118	.010	-.775
100	350	-.382	.125	.013	-1.076
100	351	-.339	.133	.085	-1.081
100	352	-.301	.116	.054	-.787
100	353	-.368	.163	.070	-1.378
100	354	-.317	.103	.026	-.663
100	355	-.282	.113	.099	-.705
100	356	-.295	.108	.102	-.730
100	357	-.230	.106	.192	-.640
100	358	-.237	.095	.117	-.564
100	359	-.203	.104	.170	-.566
100	360	-.264	.109	.131	-.653
100	361	-.209	.107	.161	-.607
100	362	-.230	.093	.075	-.545
100	401	.115	.210	.908	-.553
100	402	.196	.257	1.142	-.677
100	403	.314	.277	1.315	-.489
100	404	.302	.229	1.216	-.397
100	405	.256	.225	1.272	-.442
100	406	.010	.188	.675	-.789
100	407	.157	.198	.876	-.675
100	408	.319	.209	1.224	-.405
100	409	.275	.194	1.088	-.739
100	410	.144	.186	.869	-1.002
100	411	.021	.185	.850	-.740
100	412	.159	.184	.966	-.602
100	413	.360	.234	1.349	-.442
100	414	.252	.216	1.262	-.384
100	415	.267	.224	1.405	-.520
100	416	-.010	.159	.467	-.656
100	417	.120	.199	.795	-.640
100	418	.268	.227	1.036	-.508
100	419	.286	.212	1.264	-.395
100	420	.225	.191	1.084	-.736
100	421	.235	.191	.948	-.419
100	422	.231	.217	1.077	-.360
100	423	.191	.225	1.283	-.397
100	424	.071	.213	1.026	-.680
100	425	-.080	.166	.472	-.781
100	426	.040	.135	.682	-.364
100	427	.231	.184	1.037	-.280

APPENDIX A -- PRESSURE DATA: CONFIGURATION A: HOUSTON NATIONAL BANK

WD	TAP	CPMEAN	CPRMS	CPMAX	CPMIN
100	428	.272	.191	1.189	-.437
100	429	.289	.215	1.218	-.452
100	430	.280	.205	1.232	-.299
100	431	.306	.207	1.289	-.275
100	432	.176	.179	.834	-.432
100	433	.082	.202	.848	-.631
100	434	.258	.220	1.381	-.326
100	435	.299	.218	1.268	-.271
100	436	.195	.182	1.397	-.570
100	437	.033	.193	1.116	-.924
100	438	-.271	.172	.369	-.972
100	439	-.103	.156	.593	-.672
100	440	.041	.127	.596	-.386
100	441	.101	.177	.959	-.426
100	442	.131	.224	1.059	-.602
100	443	.200	.214	1.276	-.582
100	444	.142	.203	.911	-.581
100	445	.153	.192	1.045	-.425
100	446	.133	.214	.942	-.495
100	447	.047	.185	.747	-.508
100	448	-.242	.143	.265	-.777
100	449	-.130	.129	.320	-.575
100	450	-.081	.123	.372	-.466
100	451	-.019	.121	.406	-.418
100	452	-.015	.115	.410	-.356
100	453	.062	.145	.765	-.386
100	454	.003	.153	.591	-.625
100	455	.021	.150	.672	-.448
100	456	.000	.148	.621	-.601
100	457	-.031	.169	.809	-.668
100	458	-.079	.139	.539	-.556
100	459	-.034	.146	.706	-.646
100	460	-.116	.139	.421	-.640
100	461	-.215	.163	.364	-.804
100	462	-.211	.154	.360	-.765
100	463	-.093	.120	.359	-.570
100	464	-.055	.086	.232	-.394
100	465	-.087	.103	.269	-.429
100	466	-.115	.115	.402	-.657
100	467	-.124	.148	.469	-.823
100	468	-.115	.134	.599	-.618
100	469	-.245	.118	.137	-.719
100	470	-.197	.109	.153	-.585
100	471	-.078	.099	.223	-.436
100	472	-.041	.085	.238	-.463
100	473	-.072	.101	.257	-.555
100	474	-.100	.102	.237	-.578
100	475	-.112	.112	.329	-.554
100	476	-.107	.099	.379	-.535
100	477	-.162	.113	.215	-.556
100	478	-.100	.111	.304	-.569
100	479	.014	.116	.470	-.452
100	480	.039	.104	.424	-.311
100	481	.004	.118	.408	-.395
100	483	-.095	.107	.267	-.505
100	484	-.121	.090	.171	-.439
100	485	-.094	.109	.314	-.466
100	486	-.124	.105	.193	-.487
100	501	-.170	.104	.225	-.507
100	502	-.133	.114	.321	-.588
100	503	-.174	.106	.212	-.533
100	504	-.135	.114	.250	-.634
100	505	-.169	.100	.152	-.487
100	506	-.129	.107	.206	-.475
100	507	-.147	.111	.194	-.538
100	508	-.167	.111	.192	-.515
100	509	-.155	.090	.145	-.439
100	510	-.131	.100	.205	-.444
100	511	-.147	.101	.197	-.486
100	512	-.119	.101	.240	-.469
100	601	-.119	.108	.208	-.600
100	602	-.072	.107	.388	-.464
100	603	.004	.109	.380	-.381
100	604	-.036	.129	.416	-.495
100	605	-.118	.104	.219	-.489
100	606	-.120	.094	.282	-.459
100	607	-.000	.116	.409	-.375
100	608	-.134	.111	.247	-.538
100	609	-.106	.105	.346	-.510
100	610	-.054	.096	.306	-.391
100	611	.020	.117	.444	-.406
100	612	-.031	.119	.403	-.474
100	613	-.106	.105	.218	-.492
100	614	-.080	.109	.277	-.465
100	615	-.106	.115	.292	-.527
100	701	-.145	.120	.221	-.541
100	702	-.175	.103	.120	-.537
100	703	-.126	.105	.245	-.536
100	704	-.183	.114	.206	-.638
100	705	-.124	.103	.204	-.537
100	706	-.148	.099	.152	-.528
100	707	-.138	.115	.189	-.621
100	708	-.249	.114	.085	-.703
100	709	-.161	.110	.211	-.572
100	710	-.172	.097	.108	-.513
100	711	-.117	.104	.184	-.483
100	712	-.166	.115	.153	-.697
100	801	-.133	.109	.215	-.616
100	802	-.120	.117	.306	-.616
100	803	-.136	.112	.276	-.565
100	804	-.095	.107	.268	-.533
100	805	-.118	.103	.361	-.444
100	806	-.114	.106	.226	-.492
100	807	-.119	.111	.257	-.477
100	808	-.107	.114	.330	-.477
100	809	-.121	.102	.223	-.491
100	810	-.094	.103	.257	-.410
100	811	-.118	.103	.216	-.452
100	812	-.088	.097	.237	-.390
100	813	-.135	.093	.226	-.453
100	814	-.097	.102	.258	-.440
100	815	-.120	.101	.221	-.512
100	816	-.089	.101	.284	-.458
100	817	-.122	.087	.137	-.388
100	818	-.109	.110	.267	-.431
100	819	-.102	.112	.270	-.467
100	820	-.083	.110	.268	-.435
100	821	-.100	.101	.228	-.450
100	822	-.082	.106	.246	-.440
100	823	-.140	.107	.193	-.531
100	901	-.114	.113	.218	-.506
100	902	-.094	.113	.306	-.494
100	903	-.136	.097	.234	-.499
100	904	-.056	.118	.319	-.493
100	905	-.124	.106	.260	-.535
100	906	.006	.124	.431	-.436
100	907	-.104	.104	.280	-.413
100	908	.008	.137	.553	-.423
100	909	-.012	.132	.515	-.419
100	910	-.085	.109	.306	-.449
100	911	-.012	.112	.381	-.398
100	912	-.064	.113	.365	-.463
100	913	-.135	.109	.266	-.506
100	914	-.127	.109	.304	-.513
100	915	-.115	.105	.213	-.466
110	1	-.505	.167	.024	-1.267
110	2	-.395	.122	.049	-.894
110	3	-.048	.162	.580	-.767
110	4	.055	.160	.841	-.552
110	5	-.405	.125	.036	-.821
110	6	-.378	.106	.068	-.722
110	7	.215	.181	1.070	-.618
110	8	.315	.192	1.031	-.467
110	9	-.396	.127	-.048	-1.087
110	10	-.405	.116	-.035	-.856
110	11	-.119	.138	.411	-.638
110	12	-.094	.137	.408	-.723
110	13	.356	.227	1.428	-.436
110	14	.268	.163	1.001	-.215
110	15	-.363	.133	.022	-.907

APPENDIX A -- PRESSURE DATA: CONFIGURATION A: HOUSTON NATIONAL BANK

WD	TAP	CPMEAN	CPRMS	CPMAX	CPMIN
110	16	-.421	.140	-.004	-1.062
110	17	.357	.206	1.388	-.225
110	18	.344	.185	1.210	-.267
110	19	-.369	.139	.094	-.931
110	20	-.417	.140	-.001	-.932
110	21	-.036	.183	.748	-.585
110	22	-.016	.145	.477	-.628
110	23	-.391	.161	.311	-1.132
110	24	-.427	.160	.093	-1.189
110	25	.074	.179	1.125	-.481
110	26	.158	.181	.978	-.381
110	27	-.361	.131	.033	-.952
110	28	-.400	.140	.011	-.928
110	29	-.025	.180	.709	-.628
110	30	.014	.158	.793	-.599
110	31	-.363	.149	.067	-.985
110	32	-.392	.170	.149	-1.062
110	101	-.382	.132	.098	-.914
110	102	-.535	.217	.242	-1.525
110	103	-.384	.183	.378	-1.097
110	104	-.557	.219	.326	-1.371
110	105	-.421	.144	.008	-1.027
110	106	-.401	.214	.313	-1.354
110	107	-.289	.216	.289	-1.146
110	108	-.345	.135	.096	-.843
110	109	-.154	.160	.498	-.879
110	110	.126	.164	.730	-.651
110	111	.118	.171	.719	-.792
110	112	.038	.202	.707	-.586
110	113	-.341	.113	.028	-.820
110	114	-.350	.130	.055	-.950
110	115	-.335	.130	.065	-.974
110	116	-.413	.197	.420	-1.394
110	117	-.427	.167	.026	-1.451
110	118	-.406	.197	.260	-1.417
110	119	.261	.185	.997	-.328
110	120	.245	.189	1.087	-.433
110	121	.408	.196	1.258	-.158
110	122	-.526	.236	.209	-1.574
110	123	-.397	.198	.356	-1.239
110	124	-.286	.138	.080	-1.030
110	125	-.384	.120	-.011	-.949
110	126	-.377	.138	.046	-1.005
110	127	.330	.207	1.069	-.389
110	128	.368	.219	1.147	-.324
110	129	-.602	.220	.199	-1.845
110	130	-.433	.210	.266	-1.393
110	131	-.370	.163	.114	-1.256
110	132	-.379	.137	-.009	-.931
110	133	-.410	.123	.037	-1.018

WD	TAP	CPMEAN	CPRMS	CPMAX	CPMIN
110	134	-.523	.230	.200	-1.772
110	135	-.413	.225	.305	-1.639
110	136	-.413	.229	.267	-1.764
110	137	-.428	.235	.323	-1.555
110	138	-.336	.204	.476	-1.371
110	139	-.280	.151	.286	-.896
110	140	-.313	.133	.255	-.816
110	141	-.362	.119	.046	-.832
110	142	-.197	.240	.720	-1.890
110	143	-.139	.238	.809	-1.639
110	144	-.066	.206	.783	-.945
110	145	-.377	.138	.017	-1.174
110	146	-.354	.155	.108	-1.128
110	147	-.315	.146	.145	-1.060
110	148	-.435	.183	.093	-1.167
110	149	-.542	.151	-.134	-1.190
110	150	-.433	.182	.119	-1.255
110	151	.036	.165	.575	-.621
110	152	.024	.168	.594	-.701
110	153	.163	.180	.992	-.566
110	154	-.666	.214	-.042	-1.805
110	155	-.368	.145	.053	-1.059
110	156	-.341	.133	.108	-.866
110	157	-.384	.127	-.004	-.859
110	158	-.372	.145	.133	-.970
110	159	-.001	.132	.672	-.540
110	160	.059	.147	.707	-.482
110	161	-.638	.192	-.167	-1.486
110	162	-.323	.141	.047	-1.058
110	163	-.314	.134	.159	-.859
110	164	-.368	.134	.102	-.852
110	165	-.408	.122	-.097	-.977
110	166	-.515	.191	.044	-1.316
110	167	-.452	.192	.083	-1.337
110	168	-.459	.187	.072	-1.405
110	169	-.299	.125	.098	-.862
110	170	-.241	.123	.200	-.917
110	171	-.211	.113	.182	-.653
110	172	-.240	.113	.152	-.642
110	173	-.272	.099	.052	-.595
110	174	-.276	.118	.182	-.823
110	175	-.255	.116	.197	-.670
110	176	-.232	.109	.139	-.678
110	177	-.236	.096	.064	-.566
110	178	-.201	.106	.129	-.542
110	179	-.245	.111	.097	-.611
110	180	-.224	.111	.119	-.606
110	181	-.285	.108	.099	-.780
110	182	-.255	.106	.098	-.638
110	183	-.278	.111	.140	-.658

WD	TAP	CPMEAN	CPRMS	CPMAX	CPMIN
110	184	-.243	.108	.172	-.619
110	185	-.201	.088	.088	-.531
110	186	-.182	.098	.143	-.548
110	187	-.217	.101	.106	-.573
110	188	-.181	.099	.147	-.548
110	189	-.201	.092	.141	-.538
110	190	-.199	.108	.214	-.601
110	191	-.262	.111	.161	-.660
110	201	-.365	.139	.138	-.952
110	202	-.386	.123	-.011	-.890
110	203	-.356	.127	.016	-.916
110	204	-.397	.131	.004	-.892
110	205	-.364	.131	.048	-.865
110	206	-.415	.124	-.011	-.909
110	207	-.400	.138	.029	-.992
110	208	-.416	.129	.110	-.970
110	209	-.357	.123	.093	-.781
110	210	-.395	.118	-.040	-1.175
110	211	-.494	.173	-.026	-1.258
110	212	-.544	.182	-.060	-1.239
110	213	-.382	.122	-.044	-.943
110	214	-.395	.116	-.031	-.861
110	215	-.397	.139	.034	-.953
110	216	-.386	.157	.104	-1.007
110	217	-.336	.146	.132	-.887
110	218	-.359	.128	.047	-.945
110	219	-.338	.145	.129	-.928
110	220	-.413	.140	.064	-1.017
110	221	-.378	.133	.091	-.966
110	222	-.411	.112	.006	-.814
110	223	-.414	.140	.081	-1.055
110	224	-.476	.154	.067	-1.246
110	225	-.399	.184	.280	-1.040
110	226	-.371	.134	.129	-.842
110	227	-.332	.132	.117	-.817
110	228	-.382	.133	.154	-.866
110	229	-.355	.124	.081	-.791
110	230	-.360	.107	-.050	-.757
110	231	-.335	.118	.017	-.744
110	232	-.415	.142	.052	-.887
110	233	-.406	.157	.100	-1.094
110	234	-.420	.154	.022	-1.303
110	235	-.393	.168	.084	-1.280
110	236	-.396	.144	.016	-.959
110	237	-.371	.134	.013	-1.087
110	238	-.421	.141	.039	-1.056
110	239	-.411	.159	.105	-1.147
110	240	-.446	.136	.007	-.971
110	241	-.357	.115	.022	-.720
110	242	-.355	.111	.034	-.754

APPENDIX A -- PRESSURE DATA: CONFIGURATION A: HOUSTON NATIONAL BANK

WD	TAP	CPMEAN	CPRMS	CPMAX	CPMIN
110	243	-.357	.137	.089	-.863
110	244	-.428	.166	.082	-1.376
110	245	-.395	.155	.090	-1.170
110	246	-.361	.100	-.054	-.764
110	247	-.369	.132	.020	-1.105
110	248	-.409	.153	.185	-.980
110	249	-.353	.142	.153	-.943
110	250	-.321	.124	.074	-.899
110	251	-.341	.133	.099	-.937
110	252	-.376	.134	.054	-.949
110	253	-.323	.125	.093	-.760
110	254	-.326	.107	.110	-.730
110	255	-.317	.128	.140	-.801
110	256	-.357	.141	.131	-.981
110	257	-.321	.143	.213	-1.027
110	258	-.401	.134	.065	-.959
110	259	-.369	.147	.150	-1.072
110	260	-.410	.134	.070	-.929
110	261	-.297	.121	.121	-.770
110	262	-.263	.105	.101	-.636
110	263	-.315	.118	.106	-.743
110	264	-.325	.116	.067	-.718
110	265	-.308	.117	.080	-.706
110	266	-.289	.109	.116	-.752
110	267	-.288	.122	.102	-.736
110	268	-.314	.122	.067	-.785
110	269	-.287	.136	.097	-.875
110	270	-.251	.112	.082	-.783
110	271	-.265	.116	.079	-.894
110	272	-.269	.098	.046	-.553
110	273	-.301	.111	.098	-.764
110	274	-.301	.114	.048	-.746
110	275	-.306	.132	.088	-.860
110	276	-.336	.135	.069	-.857
110	277	-.226	.113	.172	-.586
110	278	-.189	.088	.078	-.502
110	279	-.258	.107	.089	-.634
110	280	-.210	.116	.183	-.621
110	281	-.195	.105	.158	-.621
110	282	-.167	.090	.133	-.481
110	283	-.186	.106	.182	-.555
110	284	-.231	.109	.166	-.621
110	285	-.247	.109	.119	-.645
110	286	-.268	.104	.050	-.795
110	287	-.299	.129	.082	-.884
110	288	-.328	.130	.045	-.851
110	301	-.370	.128	.098	-.922
110	302	-.381	.127	-.026	-.822
110	303	-.397	.143	.052	-.923
110	304	-.483	.167	-.020	-1.165
110	305	-.423	.148	.060	-.944
110	306	-.457	.151	-.064	-1.457
110	307	-.438	.151	-.026	-1.273
110	308	-.466	.162	-.037	-1.287
110	309	-.500	.197	.013	-2.019
110	310	-.471	.181	.027	-1.479
110	311	-.482	.190	.116	-1.537
110	312	-.519	.184	.107	-1.642
110	313	-.510	.179	.009	-1.478
110	314	-.449	.148	-.011	-.959
110	315	-.471	.172	.056	-1.129
110	316	-.550	.228	.043	-1.814
110	317	-.493	.241	.139	-2.148
110	318	-.461	.183	.200	-1.809
110	319	-.507	.192	.113	-1.364
110	320	-.582	.190	-.002	-1.528
110	321	-.580	.187	-.029	-1.664
110	322	-.545	.184	.081	-1.288
110	323	-.515	.163	.028	-1.320
110	324	-.376	.159	.128	-1.062
110	325	-.363	.156	.070	-.968
110	326	-.369	.162	.176	-1.107
110	327	-.444	.206	.116	-1.661
110	328	-.561	.227	.028	-1.999
110	329	-.667	.229	.012	-1.739
110	330	-.634	.191	-.099	-1.558
110	331	-.276	.124	.142	-1.078
110	332	-.303	.126	.094	-.880
110	333	-.294	.136	.169	-.949
110	334	-.274	.135	.067	-1.033
110	335	-.348	.196	.267	-1.559
110	336	-.574	.259	.063	-2.483
110	337	-.613	.233	.021	-2.158
110	338	-.244	.096	.172	-.658
110	339	-.250	.111	.236	-.715
110	340	-.277	.117	.244	-.766
110	341	-.276	.121	.230	-.774
110	342	-.256	.111	.068	-.864
110	343	-.404	.179	.155	-1.560
110	344	-.499	.186	.028	-1.801
110	345	-.271	.110	.076	-.682
110	346	-.226	.096	.091	-.627
110	347	-.243	.111	.189	-.676
110	348	-.300	.120	.108	-.822
110	349	-.340	.125	.110	-1.004
110	350	-.400	.119	-.027	-1.029
110	351	-.348	.127	.055	-.988
110	352	-.311	.118	.060	-.769
110	353	-.353	.134	.042	-1.014
110	354	-.361	.116	.073	-.833
110	355	-.313	.125	.112	-.806
110	356	-.323	.119	.085	-.774
110	357	-.246	.113	.147	-.660
110	358	-.257	.097	.121	-.572
110	359	-.207	.106	.178	-.559
110	360	-.279	.111	.184	-.650
110	361	-.217	.108	.182	-.578
110	362	-.247	.099	.124	-.592
110	401	.193	.165	.816	-.416
110	402	.305	.201	1.030	-.510
110	403	.457	.234	1.408	-.322
110	404	.391	.194	1.204	-.311
110	405	.315	.193	1.087	-.460
110	406	.041	.153	.761	-.489
110	407	.215	.156	.742	-.481
110	408	.446	.184	1.123	-.261
110	409	.384	.188	1.218	-.213
110	410	.208	.185	1.075	-.431
110	411	.050	.158	.671	-.534
110	412	.198	.160	.755	-.405
110	413	.464	.201	1.149	-.167
110	414	.417	.209	1.357	-.192
110	415	.337	.207	1.149	-.406
110	416	.021	.144	.666	-.611
110	417	.227	.177	.919	-.627
110	418	.391	.224	1.210	-.328
110	419	.409	.226	1.395	-.413
110	420	.338	.202	1.087	-.369
110	421	.309	.218	1.257	-.379
110	422	.379	.242	1.424	-.313
110	423	.250	.222	1.309	-.518
110	424	.089	.200	1.385	-.591
110	425	-.012	.165	.718	-.856
110	426	.139	.145	.706	-.453
110	427	.332	.181	1.168	-.146
110	428	.325	.175	.971	-.159
110	429	.352	.197	1.118	-.279
110	430	.296	.219	1.069	-.381
110	431	.401	.224	1.277	-.473
110	432	.185	.191	1.134	-.378
110	433	.056	.192	1.015	-.576
110	434	.264	.225	1.228	-.334
110	435	.338	.232	1.296	-.351
110	436	.186	.216	1.210	-.484
110	437	-.018	.198	.723	-.767
110	438	-.167	.200	.533	-.850
110	439	.032	.184	.738	-.565
110	440	.118	.138	.755	-.287
110	441	.128	.162	.951	-.400
110	442	.086	.266	1.476	-1.175

APPENDIX A -- PRESSURE DATA: CONFIGURATION A; HOUSTON NATIONAL BANK

WD	TAP	CPMEAN	CPRMS	CPMAX	CPMIN
110	443	.165	.275	1.267	-.992
110	444	.119	.251	1.098	-1.165
110	445	.188	.227	1.519	-.434
110	446	.229	.249	1.420	-.574
110	447	.114	.202	1.084	-.545
110	448	-.175	.169	.428	-.882
110	449	-.044	.162	.653	-.595
110	450	-.041	.122	.371	-.454
110	451	-.016	.112	.389	-.504
110	452	-.028	.123	.428	-.416
110	453	.085	.163	.756	-.547
110	454	.029	.174	.758	-.510
110	455	.021	.180	.705	-.604
110	456	.034	.179	.642	-.785
110	457	-.017	.192	.763	-.910
110	458	-.106	.156	.474	-.715
110	459	-.036	.162	.827	-.638
110	460	-.169	.136	.312	-.630
110	461	-.120	.180	.511	-.865
110	462	-.133	.171	.471	-.817
110	463	-.067	.126	.336	-.463
110	464	-.077	.095	.266	-.392
110	465	-.106	.113	.275	-.490
110	466	-.174	.131	.250	-.693
110	467	-.226	.187	.436	-1.245
110	468	-.235	.156	.404	-.857
110	469	-.251	.140	.286	-.765
110	470	-.209	.130	.279	-.659
110	471	-.070	.119	.312	-.482
110	472	-.008	.103	.320	-.381
110	473	-.028	.115	.325	-.393
110	474	-.091	.114	.264	-.509
110	475	-.180	.114	.243	-.673
110	476	-.200	.094	.158	-.590
110	477	-.136	.121	.268	-.559
110	478	-.082	.121	.376	-.545
110	479	.062	.148	.702	-.433
110	480	.129	.126	.716	-.230
110	481	.104	.140	.784	-.321
110	483	-.058	.115	.363	-.409
110	484	-.130	.093	.171	-.461
110	485	-.103	.111	.284	-.451
110	486	-.164	.104	.183	-.506
110	501	-.204	.093	.073	-.539
110	502	-.211	.109	.140	-.601
110	503	-.214	.103	.139	-.602
110	504	-.189	.106	.150	-.544
110	505	-.217	.104	.134	-.852
110	506	-.201	.111	.191	-.562
110	507	-.158	.107	.226	-.524

WD	TAP	CPMEAN	CPRMS	CPMAX	CPMIN
110	508	-.219	.111	.181	-.571
110	509	-.175	.084	.122	-.490
110	510	-.214	.126	.177	-1.012
110	511	-.145	.101	.206	-.508
110	512	-.159	.100	.188	-.497
110	601	-.163	.114	.215	-.524
110	602	.027	.115	.433	-.326
110	603	.116	.136	.673	-.296
110	604	.035	.174	.668	-.534
110	605	-.098	.114	.297	-.500
110	606	-.119	.093	.152	-.424
110	607	.075	.144	.613	-.339
110	608	-.104	.113	.238	-.487
110	609	-.127	.110	.206	-.529
110	610	.027	.109	.552	-.358
110	611	.115	.149	.708	-.425
110	612	.068	.145	.602	-.412
110	613	-.109	.110	.282	-.501
110	614	-.126	.098	.289	-.531
110	615	-.138	.114	.292	-.488
110	701	-.122	.118	.230	-.651
110	702	-.128	.106	.173	-.556
110	703	-.118	.117	.259	-.548
110	704	-.138	.120	.250	-.764
110	705	-.117	.112	.282	-.540
110	706	-.129	.093	.193	-.472
110	707	-.157	.117	.217	-.582
110	708	-.284	.124	.069	-.864
110	709	-.182	.110	.170	-.638
110	710	-.162	.096	.120	-.495
110	711	-.140	.111	.218	-.538
110	712	-.158	.119	.210	-.640
110	801	-.114	.118	.249	-.636
110	802	-.165	.153	.350	-.895
110	803	-.180	.152	.430	-.833
110	804	-.153	.151	.305	-.852
110	805	-.160	.108	.232	-.548
110	806	-.110	.112	.257	-.519
110	807	-.070	.120	.398	-.518
110	808	-.171	.116	.394	-.518
110	809	-.119	.099	.196	-.458
110	810	-.109	.109	.253	-.495
110	811	-.112	.110	.229	-.479
110	812	-.104	.103	.215	-.449
110	813	-.168	.097	.146	-.500
110	814	-.108	.114	.263	-.538
110	815	-.093	.107	.243	-.436
110	816	-.094	.107	.269	-.432
110	817	-.104	.080	.158	-.397
110	818	-.161	.107	.203	-.563

WD	TAP	CPMEAN	CPRMS	CPMAX	CPMIN
110	819	-.072	.106	.300	-.433
110	820	-.068	.109	.332	-.432
110	821	-.075	.093	.268	-.441
110	822	-.093	.105	.234	-.483
110	823	-.117	.108	.277	-.537
110	901	-.107	.109	.350	-.503
110	902	-.098	.117	.363	-.466
110	903	-.095	.098	.295	-.439
110	904	-.004	.139	.743	-.502
110	905	-.095	.113	.290	-.471
110	906	.118	.158	.737	-.397
110	907	-.023	.124	.514	-.399
110	908	.118	.171	.892	-.492
110	909	.126	.156	.684	-.444
110	910	-.097	.119	.425	-.555
110	911	.096	.120	.560	-.265
110	912	-.025	.127	.436	-.445
110	913	-.126	.116	.419	-.536
110	914	-.154	.112	.262	-.573
110	915	-.139	.108	.221	-.513
120	1	-.573	.200	-.114	-1.780
120	2	-.469	.114	-.091	-.847
120	3	-.113	.139	.459	-.552
120	4	-.029	.148	.489	-.520
120	5	-.443	.118	-.040	-.831
120	6	-.424	.114	-.046	-.875
120	7	.255	.180	.979	-.287
120	8	.371	.196	1.144	-.194
120	9	-.418	.138	-.022	-1.024
120	10	-.453	.129	-.053	-1.015
120	11	-.092	.146	.460	-.668
120	12	-.128	.142	.443	-.915
120	13	.240	.232	1.312	-.409
120	14	.171	.175	.817	-.462
120	15	-.368	.120	.014	-.781
120	16	-.417	.126	-.016	-.944
120	17	.368	.212	1.265	-.389
120	18	.350	.188	1.099	-.342
120	19	-.372	.121	.080	-.775
120	20	-.414	.125	.051	-.938
120	21	-.081	.160	.487	-.613
120	22	-.024	.126	.519	-.496
120	23	-.396	.144	.065	-1.049
120	24	-.435	.147	.020	-1.068
120	25	-.076	.223	.769	-.803
120	26	-.069	.255	.995	-.812
120	27	-.384	.134	.040	-.977
120	28	-.425	.146	.084	-1.008
120	29	-.068	.227	.801	-.970
120	30	-.050	.220	1.104	-1.065

APPENDIX A -- PRESSURE DATA: CONFIGURATION A: HOUSTON NATIONAL BANK

WD	TAP	CPMEAN	CPRMS	CPMAX	CPMIN
120	31	-.387	.157	.177	-1.249
120	32	-.430	.167	.154	-1.349
120	101	-.398	.120	.020	-.806
120	102	-.507	.177	.033	-1.365
120	103	-.442	.160	.088	-1.045
120	104	-.549	.195	.036	-1.449
120	105	-.490	.127	-.079	-.949
120	106	-.507	.184	.199	-1.268
120	107	-.484	.228	.149	-1.361
120	108	-.380	.131	.022	-1.093
120	109	-.261	.156	.331	-.829
120	110	.076	.154	.622	-.487
120	111	.048	.159	.676	-.485
120	112	-.140	.165	.823	-.641
120	113	-.362	.108	-.009	-.801
120	114	-.370	.124	.040	-.847
120	115	-.355	.124	.063	-.843
120	116	-.403	.162	.074	-1.155
120	117	-.421	.131	.026	-1.253
120	118	-.438	.169	.165	-1.288
120	119	.209	.203	1.040	-.366
120	120	.155	.209	.901	-.428
120	121	.307	.210	1.234	-.267
120	122	-.468	.187	.172	-1.286
120	123	-.434	.178	.236	-1.347
120	124	-.297	.124	.102	-.923
120	125	-.400	.108	-.071	-.837
120	126	-.391	.125	-.029	-.921
120	127	.199	.192	.854	-.387
120	128	.227	.238	.933	-.495
120	129	-.549	.215	.011	-1.833
120	130	-.463	.192	.115	-1.364
120	131	-.419	.171	.083	-1.239
120	132	-.381	.131	.039	-.911
120	133	-.409	.118	-.052	-.905
120	134	-.487	.215	.125	-1.533
120	135	-.432	.222	.176	-1.840
120	136	-.450	.228	.150	-2.075
120	137	-.496	.191	.028	-1.280
120	138	-.454	.191	.119	-1.180
120	139	-.389	.164	.153	-1.048
120	140	-.388	.156	.165	-.949
120	141	-.425	.128	-.039	-.874
120	142	-.323	.216	.464	-1.402
120	143	-.304	.229	.384	-1.309
120	144	-.300	.222	.706	-1.326
120	145	-.418	.138	-.006	-1.348
120	146	-.388	.147	.092	-1.003
120	147	-.362	.147	.119	-1.063
120	148	-.465	.183	.138	-1.165
120	149	-.664	.180	-.178	-1.364
120	150	-.508	.204	.086	-1.585
120	151	-.111	.210	.554	-.881
120	152	-.140	.220	.628	-.960
120	153	-.022	.246	1.118	-.750
120	154	-.782	.244	-.052	-1.804
120	155	-.429	.156	.058	-1.130
120	156	-.385	.144	.025	-1.029
120	157	-.421	.121	-.069	-.962
120	158	-.410	.141	-.004	-1.046
120	159	-.115	.170	.447	-.915
120	160	-.054	.197	.609	-.992
120	161	-.796	.242	-.037	-1.819
120	162	-.422	.178	.089	-1.133
120	163	-.363	.164	.129	-.992
120	164	-.397	.153	.055	-.938
120	165	-.425	.136	-.009	-1.017
120	166	-.618	.210	.015	-1.648
120	167	-.566	.225	.057	-1.705
120	168	-.578	.220	.010	-2.158
120	169	-.502	.189	.009	-1.282
120	170	-.380	.180	.143	-1.176
120	171	-.299	.149	.146	-.885
120	172	-.299	.140	.131	-.911
120	173	-.324	.115	.056	-.999
120	174	-.329	.131	.101	-.929
120	175	-.312	.129	.106	-.984
120	176	-.305	.122	.060	-.824
120	177	-.304	.106	.038	-.720
120	178	-.249	.114	.098	-.632
120	179	-.293	.116	.056	-.713
120	180	-.285	.115	.061	-.731
120	181	-.369	.136	.049	-1.120
120	182	-.361	.135	.066	-.978
120	183	-.334	.126	.090	-.830
120	184	-.298	.120	.145	-.871
120	185	-.223	.091	.096	-.535
120	186	-.199	.101	.124	-.551
120	187	-.234	.104	.148	-.579
120	188	-.201	.103	.182	-.522
120	189	-.221	.089	.099	-.569
120	190	-.214	.105	.160	-.661
120	191	-.275	.106	.075	-.713
120	201	-.365	.119	.051	-.789
120	202	-.380	.111	-.044	-.795
120	203	-.343	.118	.006	-.823
120	204	-.377	.124	.024	-.858
120	205	-.349	.123	.056	-.830
120	206	-.459	.118	-.133	-.922
120	207	-.440	.132	-.094	-1.046
120	208	-.399	.115	-.054	-.861
120	209	-.374	.121	-.009	-.821
120	210	-.412	.116	-.096	-.910
120	211	-.526	.178	.031	-1.248
120	212	-.551	.190	-.012	-1.317
120	213	-.382	.113	-.028	-.781
120	214	-.459	.131	.004	-.946
120	215	-.452	.157	.062	-1.083
120	216	-.384	.144	.103	-1.052
120	217	-.342	.136	.120	-.976
120	218	-.349	.103	.029	-.749
120	219	-.325	.117	.105	-.846
120	220	-.400	.119	.027	-.923
120	221	-.370	.113	.053	-.878
120	222	-.422	.103	-.015	-.810
120	223	-.396	.136	.100	-.992
120	224	-.435	.148	.079	-1.036
120	225	-.368	.135	.053	-1.030
120	226	-.359	.120	.158	-1.059
120	227	-.322	.121	.217	-.986
120	228	-.355	.121	.186	-.846
120	229	-.342	.117	.191	-.763
120	230	-.364	.098	-.050	-.733
120	231	-.342	.115	.039	-.740
120	232	-.393	.133	.045	-.984
120	233	-.370	.141	.110	-1.184
120	234	-.404	.125	.027	-.968
120	235	-.365	.137	.078	-.999
120	236	-.370	.121	.031	-.902
120	237	-.335	.114	.068	-.782
120	238	-.386	.114	-.015	-.901
120	239	-.359	.127	.054	-.997
120	240	-.386	.116	.010	-1.070
120	241	-.333	.104	.042	-.761
120	242	-.368	.104	-.019	-.876
120	243	-.365	.134	.142	-.878
120	244	-.389	.142	.100	-.971
120	245	-.499	.185	.077	-1.493
120	246	-.456	.119	-.087	-.930
120	247	-.404	.149	.015	-1.360
120	248	-.410	.154	.076	-1.187
120	249	-.362	.140	.093	-1.008
120	250	-.347	.121	.069	-.791
120	251	-.345	.117	.051	-.788
120	252	-.371	.116	.018	-.826
120	253	-.323	.104	.042	-.682
120	254	-.362	.102	-.002	-.665
120	255	-.349	.120	.092	-.762
120	256	-.363	.118	.044	-.748
120	257	-.326	.117	.081	-.714

APPENDIX A -- PRESSURE DATA: CONFIGURATION A: HOUSTON NATIONAL BANK

WD	TAP	CPMEAN	CPRMS	CPMAX	CPMIN
120	258	-.400	.135	.126	-.959
120	259	-.363	.147	.167	-.913
120	260	-.404	.132	.077	-.877
120	261	-.323	.134	.136	-.991
120	262	-.313	.115	.064	-.839
120	263	-.356	.123	.045	-.796
120	264	-.367	.118	.008	-.798
120	265	-.337	.115	.073	-.787
120	266	-.336	.118	.067	-.801
120	267	-.333	.131	.141	-1.074
120	268	-.364	.131	.108	-1.049
120	269	-.362	.156	.153	-1.353
120	270	-.314	.132	.081	-1.050
120	271	-.331	.130	.107	-.819
120	272	-.280	.107	.026	-.622
120	273	-.307	.114	.031	-.751
120	274	-.317	.108	.082	-.792
120	275	-.310	.125	.104	-.919
120	276	-.344	.128	.104	-1.092
120	277	-.237	.111	.140	-.627
120	278	-.199	.093	.147	-.525
120	279	-.268	.112	.116	-.711
120	280	-.275	.125	.105	-.720
120	281	-.306	.126	.169	-.774
120	282	-.206	.095	.133	-.571
120	283	-.207	.107	.174	-.623
120	284	-.265	.112	.166	-.684
120	285	-.299	.112	.112	-.732
120	286	-.253	.099	.093	-.554
120	287	-.248	.109	.111	-.606
120	288	-.285	.110	.076	-.640
120	301	-.400	.128	.094	-1.022
120	302	-.459	.134	-.017	-1.174
120	303	-.484	.162	.024	-1.127
120	304	-.578	.184	-.037	-1.366
120	305	-.586	.232	-.022	-1.659
120	306	-.454	.154	-.038	-1.225
120	307	-.539	.186	-.002	-1.312
120	308	-.818	.283	-.095	-1.910
120	309	-.500	.174	.157	-1.309
120	310	-.417	.153	-.038	-1.194
120	311	-.435	.173	.029	-1.241
120	312	-.525	.187	-.007	-1.476
120	313	-.566	.203	.047	-1.618
120	314	-.580	.190	.024	-1.274
120	315	-.687	.224	.032	-1.487
120	316	-.959	.388	-.112	-2.755
120	317	-.410	.182	.060	-1.457
120	318	-.374	.169	.072	-1.162
120	319	-.465	.219	.241	-1.393
120	320	-.622	.239	.097	-1.562
120	321	-.699	.229	-.027	-2.032
120	322	-.660	.188	-.024	-1.472
120	323	-.632	.168	-.134	-1.319
120	324	-.373	.135	.066	-.963
120	325	-.346	.137	.077	-.997
120	326	-.311	.131	.184	-.890
120	327	-.407	.203	.151	-1.199
120	328	-.610	.276	.114	-1.987
120	329	-.794	.243	-.058	-1.928
120	330	-.735	.190	-.211	-1.812
120	331	-.315	.111	.110	-.738
120	332	-.341	.110	.069	-.725
120	333	-.308	.107	.078	-.696
120	334	-.264	.092	.052	-.632
120	335	-.294	.114	.163	-.827
120	336	-.558	.204	.104	-1.340
120	337	-.707	.205	.070	-1.459
120	338	-.274	.099	.048	-.624
120	339	-.278	.112	.107	-.657
120	340	-.303	.114	.067	-.684
120	341	-.285	.114	.087	-.654
120	342	-.253	.098	.061	-.615
120	343	-.379	.143	.110	-1.314
120	344	-.482	.147	-.013	-1.218
120	345	-.262	.112	.107	-.627
120	346	-.231	.091	.054	-.547
120	347	-.250	.106	.106	-.664
120	348	-.310	.112	.098	-.686
120	349	-.339	.116	-.010	-.760
120	350	-.437	.120	-.056	-.968
120	351	-.374	.125	.035	-.921
120	352	-.331	.100	.080	-.679
120	353	-.377	.135	-.029	-.928
120	354	-.380	.107	-.012	-.769
120	355	-.308	.115	.066	-.735
120	356	-.351	.111	.052	-.743
120	357	-.269	.106	.120	-.658
120	358	-.289	.093	.018	-.673
120	359	-.228	.100	.126	-.642
120	360	-.310	.106	.072	-.747
120	361	-.237	.103	.140	-.675
120	362	-.277	.102	.065	-.656
120	401	.255	.167	.972	-.443
120	402	.365	.204	1.290	-.401
120	403	.467	.223	1.363	-.291
120	404	.349	.201	1.201	-.305
120	405	.266	.196	1.103	-.506
120	406	.038	.166	.651	-.515
120	407	.245	.168	.931	-.317
120	408	.449	.167	1.086	-.099
120	409	.311	.168	1.008	-.226
120	410	.104	.166	.840	-.459
120	411	.072	.164	.744	-.576
120	412	.257	.157	.949	-.343
120	413	.479	.187	1.076	-.074
120	414	.344	.200	1.118	-.222
120	415	.245	.190	.985	-.377
120	416	.066	.149	.614	-.419
120	417	.256	.172	.944	-.359
120	418	.427	.212	1.147	-.137
120	419	.354	.210	1.130	-.193
120	420	.246	.189	.930	-.353
120	421	.190	.209	1.047	-.350
120	422	.419	.248	1.504	-.342
120	423	.239	.203	1.211	-.437
120	424	.051	.186	.902	-.566
120	425	.060	.158	.794	-.531
120	426	.226	.145	.646	-.276
120	427	.406	.185	1.217	-.174
120	428	.279	.162	.906	-.428
120	429	.277	.176	.932	-.393
120	430	.107	.211	1.022	-.526
120	431	.416	.214	1.306	-.249
120	432	.121	.187	.969	-.690
120	433	.005	.185	.809	-.738
120	434	.099	.193	1.296	-.529
120	435	.248	.195	1.235	-.369
120	436	.035	.200	.995	-.578
120	437	-.138	.199	.773	-.865
120	438	-.058	.198	.753	-.929
120	439	.161	.185	.783	-.534
120	440	.223	.161	.856	-.282
120	441	.168	.145	.719	-.528
120	442	-.002	.211	.800	-1.201
120	443	-.073	.257	1.127	-1.219
120	444	-.215	.238	.963	-1.094
120	445	-.112	.271	1.196	-1.030
120	446	-.008	.335	1.571	-1.245
120	447	-.028	.262	1.040	-1.127
120	448	-.051	.176	.545	-.731
120	449	.106	.161	.636	-.416
120	450	.005	.145	.575	-.497
120	451	-.021	.123	.413	-.386
120	452	-.108	.113	.252	-.510
120	453	-.069	.156	.499	-.618
120	454	-.179	.187	.478	-.845
120	455	-.216	.215	.583	-1.411
120	456	-.028	.235	.842	-.922
120	457	-.054	.233	.785	-1.052

APPENDIX A -- PRESSURE DATA: CONFIGURATION A; HOUSTON NATIONAL BANK

WD	TAP	CPMEAN	CPRMS	CPMAX	CPMIN
120	458	-.246	.178	.347	-1.077
120	459	-.062	.154	.542	-.700
120	460	-.261	.142	.349	-.843
120	461	-.080	.163	.582	-.819
120	462	-.112	.160	.508	-.692
120	463	-.097	.118	.416	-.611
120	464	-.099	.091	.229	-.490
120	465	-.119	.105	.249	-.589
120	466	-.187	.126	.270	-.780
120	467	-.310	.195	.443	-1.207
120	468	-.361	.156	.196	-1.152
120	469	-.156	.144	.300	-1.228
120	470	-.147	.135	.272	-.952
120	471	-.125	.113	.261	-.548
120	472	-.085	.103	.269	-.429
120	473	-.069	.120	.401	-.491
120	474	-.109	.117	.334	-.551
120	475	-.211	.110	.113	-.625
120	476	-.247	.100	.078	-.617
120	477	-.190	.104	.218	-.515
120	478	-.166	.112	.249	-.519
120	479	-.064	.124	.437	-.424
120	480	-.002	.130	.841	-.362
120	481	.032	.156	.954	-.390
120	483	-.074	.122	.449	-.449
120	484	-.162	.102	.191	-.571
120	485	-.122	.114	.263	-.548
120	486	-.181	.112	.197	-.565
120	501	-.230	.103	.132	-.702
120	502	-.236	.123	.272	-.836
120	503	-.245	.120	.244	-.771
120	504	-.192	.115	.223	-.669
120	505	-.238	.112	.063	-1.055
120	506	-.208	.110	.111	-.588
120	507	-.158	.105	.152	-.523
120	508	-.245	.110	.142	-.683
120	509	-.191	.087	.137	-.475
120	510	-.183	.123	.249	-1.017
120	511	-.142	.101	.231	-.489
120	512	-.165	.103	.195	-.522
120	601	-.138	.118	.284	-.535
120	602	.029	.119	.506	-.316
120	603	.006	.147	.565	-.421
120	604	-.088	.132	.525	-.462
120	605	-.148	.117	.327	-.526
120	606	-.113	.091	.277	-.424
120	607	.015	.139	.548	-.490
120	608	-.132	.104	.183	-.531
120	609	-.124	.103	.260	-.483
120	610	.049	.123	.505	-.364

WD	TAP	CPMEAN	CPRMS	CPMAX	CPMIN
120	611	.059	.160	.785	-.407
120	612	-.047	.133	.554	-.413
120	613	-.125	.108	.234	-.477
120	614	-.142	.100	.241	-.507
120	615	-.125	.120	.395	-.562
120	701	-.126	.107	.189	-.537
120	702	-.148	.096	.219	-.477
120	703	-.127	.107	.291	-.569
120	704	-.149	.112	.263	-.622
120	705	-.135	.105	.261	-.528
120	706	-.143	.087	.140	-.438
120	707	-.148	.110	.195	-.759
120	708	-.252	.115	.155	-.719
120	709	-.192	.104	.159	-.575
120	710	-.180	.088	.153	-.475
120	711	-.149	.102	.246	-.490
120	712	-.162	.110	.277	-.591
120	801	-.087	.100	.286	-.493
120	802	-.127	.114	.264	-.753
120	803	-.139	.128	.329	-.722
120	804	-.150	.140	.378	-.797
120	805	-.174	.117	.362	-.700
120	806	-.082	.125	.428	-.560
120	807	-.103	.104	.259	-.464
120	808	-.169	.119	.234	-.627
120	809	-.096	.098	.232	-.583
120	810	-.131	.102	.206	-.516
120	811	-.133	.105	.279	-.561
120	812	-.119	.100	.206	-.506
120	813	-.163	.105	.201	-.523
120	814	-.087	.109	.352	-.431
120	815	-.126	.099	.276	-.476
120	816	-.118	.099	.280	-.468
120	817	-.132	.081	.188	-.417
120	818	-.153	.116	.313	-.593
120	819	-.081	.105	.341	-.451
120	820	-.109	.104	.296	-.447
120	821	-.115	.091	.259	-.458
120	822	-.112	.102	.300	-.514
120	823	-.112	.107	.320	-.526
120	901	-.109	.110	.201	-.521
120	902	-.118	.109	.261	-.482
120	903	-.131	.093	.207	-.425
120	904	-.089	.121	.425	-.468
120	905	-.132	.105	.279	-.602
120	906	.019	.153	.653	-.465
120	907	-.082	.110	.418	-.462
120	908	.049	.172	.877	-.474
120	909	.049	.156	.831	-.438
120	910	-.107	.110	.283	-.508

WD	TAP	CPMEAN	CPRMS	CPMAX	CPMIN
120	911	.048	.133	.582	-.324
120	912	-.011	.136	.433	-.470
120	913	-.132	.120	.294	-.565
120	914	-.122	.118	.272	-.562
120	915	-.138	.112	.265	-.484
130	1	-.437	.129	-.068	-.949
130	2	-.430	.106	-.060	-.854
130	3	-.145	.135	.393	-.617
130	4	-.066	.145	.579	-.580
130	5	-.409	.115	-.010	-.838
130	6	-.392	.105	-.046	-.734
130	7	.223	.181	1.003	-.309
130	8	.325	.196	1.155	-.181
130	9	-.401	.113	-.005	-.876
130	10	-.404	.115	.002	-.882
130	11	-.013	.152	.567	-.546
130	12	-.054	.154	.580	-.545
130	13	.059	.194	.684	-.527
130	14	-.025	.145	.703	-.453
130	15	-.356	.110	.138	-.718
130	16	-.400	.112	.098	-.737
130	17	.295	.186	1.333	-.232
130	18	.266	.183	1.111	-.259
130	19	-.367	.110	.045	-.749
130	20	-.406	.113	.016	-.787
130	21	-.147	.129	.422	-.586
130	22	-.070	.114	.518	-.466
130	23	-.395	.126	.096	-1.131
130	24	-.437	.130	-.011	-.969
130	25	-.303	.201	.652	-1.114
130	26	-.361	.155	.487	-.794
130	27	-.408	.130	.008	-.925
130	28	-.456	.140	-.028	-1.015
130	29	-.190	.249	.644	-1.072
130	30	-.357	.194	.660	-1.108
130	31	-.446	.161	.161	-1.162
130	32	-.473	.154	.108	-1.185
130	101	-.352	.111	-.039	-.752
130	102	-.384	.139	-.004	-.999
130	103	-.353	.133	.047	-.902
130	104	-.390	.151	.035	-1.064
130	105	-.432	.127	-.115	-.882
130	106	-.411	.185	.129	-1.102
130	107	-.477	.186	-.016	-1.219
130	108	-.376	.125	.085	-.843
130	109	-.264	.137	.153	-.824
130	110	-.046	.134	.489	-.524
130	111	-.099	.132	.382	-.573
130	112	-.264	.133	.318	-.799
130	113	-.374	.096	-.069	-.707

APPENDIX A -- PRESSURE DATA: CONFIGURATION A; HOUSTON NATIONAL BANK

WD	TAP	CPMEAN	CPRMS	CPMAX	CPMIN
130	114	-.373	.108	-.007	-.764
130	115	-.357	.108	-.009	-.748
130	116	-.381	.115	-.032	-.802
130	117	-.386	.099	-.118	-.758
130	118	-.395	.118	-.065	-.870
130	119	-.024	.163	.612	-.545
130	120	-.115	.163	.589	-.665
130	121	.104	.178	.929	-.345
130	122	-.388	.125	.048	-1.446
130	123	-.399	.129	-.005	-.944
130	124	-.288	.106	.032	-.674
130	125	-.389	.098	-.065	-.712
130	126	-.379	.109	-.023	-.742
130	127	-.022	.183	.843	-.608
130	128	-.068	.223	.980	-.827
130	129	-.420	.125	-.054	-1.038
130	130	-.423	.144	.056	-1.183
130	131	-.421	.143	-.003	-1.064
130	132	-.384	.120	-.034	-.789
130	133	-.407	.097	-.069	-.751
130	134	-.418	.122	-.051	-.883
130	135	-.390	.123	.001	-.944
130	136	-.401	.124	-.006	-.992
130	137	-.438	.110	-.089	-1.067
130	138	-.426	.126	-.022	-1.000
130	139	-.412	.122	.004	-.910
130	140	-.422	.121	.006	-.942
130	141	-.461	.109	-.118	-1.010
130	142	-.418	.129	.152	-.875
130	143	-.409	.131	.184	-.965
130	144	-.423	.135	.191	-.859
130	145	-.441	.119	-.072	-1.033
130	146	-.432	.141	.010	-1.122
130	147	-.418	.146	.030	-1.300
130	148	-.469	.178	.065	-1.393
130	149	-.600	.152	-.175	-1.328
130	150	-.517	.179	-.004	-1.476
130	151	-.338	.160	.298	-1.022
130	152	-.363	.161	.227	-1.053
130	153	-.340	.190	.706	-.889
130	154	-.653	.236	-.046	-1.742
130	155	-.472	.153	.005	-1.099
130	156	-.425	.137	.000	-.940
130	157	-.486	.127	-.070	-1.005
130	158	-.470	.145	.010	-1.151
130	159	-.276	.183	.355	-1.131
130	160	-.236	.207	.511	-1.311
130	161	-.634	.190	-.086	-1.968
130	162	-.535	.184	.039	-1.528
130	163	-.460	.169	.069	-1.099
130	164	-.457	.145	.018	-.978
130	165	-.494	.134	-.125	-1.019
130	166	-.571	.221	.007	-1.940
130	167	-.548	.241	.079	-2.761
130	168	-.557	.233	.002	-2.044
130	169	-.543	.172	-.036	-1.406
130	170	-.470	.169	.059	-1.311
130	171	-.404	.152	.140	-1.170
130	172	-.396	.146	.241	-.970
130	173	-.439	.135	.011	-1.071
130	174	-.390	.153	.027	-1.221
130	175	-.382	.152	.044	-1.236
130	176	-.383	.144	.063	-1.131
130	177	-.387	.115	.031	-.798
130	178	-.297	.119	.145	-.711
130	179	-.304	.118	.113	-.704
130	180	-.275	.115	.125	-.702
130	181	-.538	.215	-.036	-1.634
130	182	-.521	.172	-.066	-1.219
130	183	-.411	.143	.112	-.956
130	184	-.362	.133	.125	-.883
130	185	-.255	.099	.087	-.583
130	186	-.223	.109	.157	-.590
130	187	-.257	.112	.134	-.633
130	188	-.220	.109	.161	-.589
130	189	-.250	.094	.068	-.620
130	190	-.217	.108	.144	-.642
130	191	-.256	.107	.107	-.661
130	201	-.354	.112	.067	-.737
130	202	-.382	.107	-.030	-.741
130	203	-.345	.116	.035	-.745
130	204	-.386	.124	-.022	-.801
130	205	-.358	.124	.017	-.767
130	206	-.434	.115	-.076	-.845
130	207	-.393	.124	-.008	-.817
130	208	-.399	.116	-.008	-.818
130	209	-.377	.125	.068	-.847
130	210	-.412	.109	-.073	-.817
130	211	-.416	.133	-.025	-.999
130	212	-.442	.129	-.077	-1.114
130	213	-.375	.108	-.048	-.776
130	214	-.420	.112	-.093	-.806
130	215	-.388	.127	.002	-.927
130	216	-.389	.116	-.025	-.810
130	217	-.348	.113	.006	-.769
130	218	-.394	.098	-.081	-.744
130	219	-.363	.111	.046	-.762
130	220	-.427	.113	-.108	-.933
130	221	-.391	.109	-.063	-.870
130	222	-.428	.102	-.118	-.770
130	223	-.381	.118	.029	-.845
130	224	-.412	.123	-.003	-.989
130	225	-.380	.119	-.018	-.792
130	226	-.392	.102	-.020	-.747
130	227	-.353	.109	-.010	-.713
130	228	-.390	.112	-.006	-.773
130	229	-.368	.110	.040	-.750
130	230	-.403	.104	-.053	-.758
130	231	-.367	.119	-.007	-.774
130	232	-.405	.127	-.030	-.853
130	233	-.370	.128	.022	-1.204
130	234	-.423	.103	-.090	-.758
130	235	-.377	.110	-.034	-.739
130	236	-.401	.109	-.059	-.782
130	237	-.368	.106	-.025	-.700
130	238	-.432	.099	-.061	-.781
130	239	-.390	.109	.025	-.775
130	240	-.419	.105	-.012	-.822
130	241	-.370	.101	.010	-.891
130	242	-.390	.099	-.073	-.791
130	243	-.367	.121	.044	-.772
130	244	-.393	.121	.025	-.851
130	245	-.472	.163	.007	-1.288
130	246	-.431	.093	-.105	-.816
130	247	-.424	.117	-.050	-.980
130	248	-.470	.151	.048	-1.099
130	249	-.420	.136	.008	-.982
130	250	-.404	.124	-.001	-.893
130	251	-.414	.119	-.059	-.845
130	252	-.440	.119	-.083	-.902
130	253	-.380	.111	.003	-.786
130	254	-.398	.098	-.061	-.744
130	255	-.353	.111	.059	-.769
130	256	-.374	.116	.023	-.869
130	257	-.338	.115	.051	-.841
130	258	-.504	.153	-.059	-1.324
130	259	-.450	.159	-.026	-1.357
130	260	-.491	.144	-.129	-1.194
130	261	-.459	.161	.036	-1.254
130	262	-.397	.123	-.032	-.947
130	263	-.411	.117	-.045	-.871
130	264	-.416	.114	-.074	-.856
130	265	-.365	.109	.002	-.768
130	266	-.336	.106	-.013	-.862
130	267	-.336	.119	.054	-.924
130	268	-.376	.121	.011	-.978
130	269	-.351	.134	.056	-1.280
130	270	-.284	.110	.009	-.855
130	271	-.326	.118	.032	-.913
130	272	-.348	.110	.007	-.709

APPENDIX A -- PRESSURE DATA: CONFIGURATION A; HOUSTON NATIONAL BANK

WD	TAP	CPMEAN	CPRMS	CPMAX	CPMIN
130	273	-.404	.116	-.056	-.784
130	274	-.352	.100	.016	-.665
130	275	-.347	.115	.023	-.753
130	276	-.389	.118	.017	-.784
130	277	-.288	.116	.179	-.635
130	278	-.274	.094	.060	-.596
130	279	-.390	.112	-.031	-.816
130	280	-.241	.111	.147	-.572
130	281	-.238	.109	.100	-.620
130	282	-.187	.094	.137	-.504
130	283	-.222	.109	.187	-.595
130	284	-.299	.116	.093	-.802
130	285	-.343	.115	.024	-.890
130	286	-.363	.106	-.034	-.783
130	287	-.356	.114	.001	-.761
130	288	-.401	.117	-.038	-.818
130	301	-.481	.179	.016	-1.528
130	302	-.438	.139	-.026	-.922
130	303	-.452	.177	.196	-1.060
130	304	-.462	.167	.124	-1.212
130	305	-.773	.254	.199	-1.746
130	306	-.361	.112	.034	-.914
130	307	-.441	.178	.013	-1.154
130	308	-.910	.265	-.156	-1.930
130	309	-.404	.129	.130	-1.008
130	310	-.339	.103	-.022	-1.018
130	311	-.349	.123	.068	-1.161
130	312	-.391	.151	.060	-1.329
130	313	-.407	.189	.091	-1.369
130	314	-.451	.210	.083	-1.353
130	315	-.659	.259	.220	-1.804
130	316	-1.093	.400	-.131	-2.963
130	317	-.365	.133	.099	-1.014
130	318	-.307	.113	.071	-.811
130	319	-.347	.183	.190	-1.152
130	320	-.496	.254	.196	-1.449
130	321	-.631	.272	.167	-1.805
130	322	-.683	.189	.110	-1.496
130	323	-.704	.165	-.037	-1.426
130	324	-.387	.121	.013	-.906
130	325	-.349	.124	.064	-.943
130	326	-.293	.123	.088	-.955
130	327	-.363	.191	.102	-1.518
130	328	-.558	.265	.071	-1.530
130	329	-.767	.231	.019	-2.047
130	330	-.709	.190	-.148	-1.794
130	331	-.316	.109	.029	-.686
130	332	-.353	.109	-.018	-.749
130	333	-.322	.106	.033	-.676
130	334	-.278	.095	.050	-.631

WD	TAP	CPMEAN	CPRMS	CPMAX	CPMIN
130	335	-.310	.120	.096	-.787
130	336	-.645	.215	.107	-1.397
130	337	-.740	.213	-.142	-1.714
130	338	-.299	.101	.055	-.695
130	339	-.308	.113	.093	-.762
130	340	-.346	.113	.057	-.815
130	341	-.320	.109	.077	-.773
130	342	-.280	.095	.061	-.597
130	343	-.419	.148	.014	-1.066
130	344	-.559	.154	-.047	-1.194
130	345	-.351	.111	.010	-.769
130	346	-.285	.084	.017	-.611
130	347	-.284	.099	.092	-.681
130	348	-.331	.104	.155	-.715
130	349	-.323	.106	.064	-.769
130	350	-.427	.122	-.034	-.844
130	351	-.386	.127	.062	-.864
130	352	-.361	.105	.033	-.786
130	353	-.384	.125	.032	-.837
130	354	-.398	.111	-.066	-.828
130	355	-.303	.116	.024	-.738
130	356	-.421	.110	-.012	-.763
130	357	-.325	.106	.064	-.667
130	358	-.361	.094	-.031	-.675
130	359	-.267	.098	.105	-.580
130	360	-.346	.104	.032	-.692
130	361	-.268	.102	.096	-.655
130	362	-.326	.099	.026	-.680
130	401	.333	.170	1.144	-.205
130	402	.427	.204	1.398	-.214
130	403	.450	.218	1.294	-.210
130	404	.269	.173	1.072	-.309
130	405	.200	.167	.851	-.372
130	406	.176	.172	.773	-.436
130	407	.355	.168	.946	-.233
130	408	.416	.165	1.172	-.071
130	409	.233	.156	.763	-.210
130	410	.027	.152	.492	-.426
130	411	.163	.176	.908	-.488
130	412	.333	.175	1.007	-.146
130	413	.454	.193	1.282	-.156
130	414	.238	.178	1.023	-.288
130	415	.135	.168	.793	-.424
130	416	.147	.179	.871	-.368
130	417	.286	.165	.884	-.285
130	418	.405	.202	1.260	-.086
130	419	.256	.171	.904	-.252
130	420	.111	.161	.704	-.344
130	421	.020	.175	.704	-.451
130	422	.379	.225	1.242	-.272

WD	TAP	CPMEAN	CPRMS	CPMAX	CPMIN
130	423	.180	.170	.799	-.351
130	424	-.009	.143	.547	-.474
130	425	.151	.157	.763	-.359
130	426	.292	.149	.748	-.119
130	427	.407	.177	1.061	-.090
130	428	.183	.151	.677	-.296
130	429	.149	.156	.716	-.353
130	430	-.097	.173	.595	-.742
130	431	.382	.193	1.115	-.175
130	432	.042	.159	.922	-.492
130	433	-.062	.148	.698	-.611
130	434	-.034	.179	.764	-.747
130	435	.209	.169	1.083	-.450
130	436	-.077	.133	.555	-.521
130	437	-.217	.129	.515	-.836
130	438	.037	.177	.694	-.536
130	439	.259	.176	.920	-.299
130	440	.282	.150	.806	-.218
130	441	.204	.140	.637	-.290
130	442	.063	.163	.574	-.777
130	443	-.147	.157	.451	-.843
130	444	-.301	.140	.267	-.924
130	445	-.367	.157	.354	-1.030
130	446	-.402	.249	.733	-1.246
130	447	-.328	.237	.735	-1.093
130	448	-.010	.142	.500	-.455
130	449	.160	.155	.701	-.346
130	450	.027	.124	.405	-.399
130	451	-.034	.113	.358	-.451
130	452	-.154	.108	.216	-.485
130	453	-.171	.143	.393	-.650
130	454	-.331	.159	.313	-.897
130	455	-.355	.184	.377	-1.063
130	456	-.218	.261	.877	-1.034
130	457	-.180	.261	.833	-1.108
130	458	-.385	.190	.223	-1.319
130	459	-.071	.142	.356	-.667
130	460	-.282	.126	.187	-.764
130	461	.000	.172	.804	-.614
130	462	-.028	.174	.774	-.686
130	463	-.091	.129	.386	-.692
130	464	-.143	.100	.230	-.497
130	465	-.153	.116	.226	-.514
130	466	-.196	.124	.203	-.637
130	467	-.305	.166	.188	-1.327
130	468	-.387	.139	.099	-1.210
130	469	-.097	.139	.446	-.560
130	470	-.092	.132	.422	-.558
130	471	-.139	.110	.259	-.495
130	472	-.155	.100	.201	-.579

APPENDIX A -- PRESSURE DATA: CONFIGURATION A: HOUSTON NATIONAL BANK

WD	TAP	CPMEAN	CPRMS	CPMAX	CPMIN
130	473	-.132	.118	.242	-.586
130	474	-.161	.119	.260	-.586
130	475	-.237	.120	.139	-.686
130	476	-.298	.104	.111	-.684
130	477	-.209	.114	.224	-.550
130	478	-.199	.111	.175	-.606
130	479	-.101	.113	.307	-.505
130	480	-.088	.095	.232	-.392
130	481	-.058	.125	.564	-.435
130	483	-.146	.121	.290	-.555
130	484	-.270	.115	.104	-.743
130	485	-.171	.109	.211	-.630
130	486	-.209	.108	.193	-.625
130	501	-.169	.096	.148	-.518
130	502	-.156	.112	.222	-.624
130	503	-.192	.102	.170	-.653
130	504	-.158	.107	.206	-.620
130	505	-.193	.092	.101	-.554
130	506	-.169	.097	.109	-.488
130	507	-.169	.102	.152	-.513
130	508	-.250	.111	.082	-.838
130	509	-.200	.088	.089	-.496
130	510	-.189	.108	.188	-.593
130	511	-.180	.104	.174	-.528
130	512	-.178	.103	.157	-.519
130	601	-.127	.112	.293	-.575
130	602	-.041	.114	.517	-.376
130	603	-.077	.113	.602	-.424
130	604	-.169	.105	.246	-.531
130	605	-.197	.106	.150	-.564
130	606	-.126	.096	.249	-.481
130	607	-.077	.116	.408	-.516
130	608	-.168	.103	.146	-.537
130	609	-.146	.108	.280	-.544
130	610	-.045	.109	.434	-.412
130	611	-.054	.117	.473	-.434
130	612	-.114	.106	.277	-.476
130	613	-.143	.098	.180	-.489
130	614	-.144	.096	.161	-.495
130	615	-.142	.114	.402	-.559
130	701	-.157	.099	.217	-.617
130	702	-.196	.093	.123	-.616
130	703	-.157	.099	.181	-.587
130	704	-.189	.105	.167	-.575
130	705	-.154	.100	.174	-.577
130	706	-.161	.088	.198	-.425
130	707	-.140	.113	.280	-.542
130	708	-.248	.109	.153	-.626
130	709	-.210	.104	.186	-.526
130	710	-.196	.088	.086	-.513

WD	TAP	CPMEAN	CPRMS	CPMAX	CPMIN
130	711	-.166	.100	.171	-.502
130	712	-.171	.108	.208	-.557
130	801	-.055	.095	.280	-.462
130	802	-.155	.101	.148	-.569
130	803	-.150	.103	.146	-.508
130	804	-.139	.110	.186	-.531
130	805	-.138	.099	.195	-.555
130	806	-.044	.121	.387	-.493
130	807	-.142	.104	.253	-.510
130	808	-.121	.119	.335	-.547
130	809	-.066	.097	.315	-.437
130	810	-.172	.096	.153	-.510
130	811	-.149	.105	.229	-.489
130	812	-.144	.093	.164	-.465
130	813	-.146	.108	.232	-.558
130	814	-.073	.117	.306	-.539
130	815	-.192	.108	.137	-.550
130	816	-.152	.112	.189	-.513
130	817	-.159	.077	.164	-.451
130	818	-.145	.111	.307	-.538
130	819	-.092	.107	.316	-.525
130	820	-.162	.099	.249	-.514
130	821	-.126	.089	.218	-.527
130	822	-.135	.096	.233	-.551
130	823	-.163	.100	.280	-.560
130	901	-.124	.111	.359	-.523
130	902	-.161	.106	.203	-.560
130	903	-.157	.089	.134	-.459
130	904	-.136	.108	.256	-.531
130	905	-.161	.105	.201	-.541
130	906	-.076	.117	.399	-.482
130	907	-.137	.086	.179	-.434
130	908	-.061	.131	.495	-.474
130	909	-.061	.124	.652	-.433
130	910	-.145	.101	.232	-.470
130	911	-.039	.115	.506	-.432
130	912	-.073	.132	.372	-.547
130	913	-.163	.109	.265	-.560
130	914	-.119	.110	.259	-.556
130	915	-.161	.108	.276	-.527
140	1	-.360	.106	-.006	-.763
140	2	-.376	.092	.034	-.743
140	3	-.179	.118	.257	-.598
140	4	-.110	.133	.323	-.567
140	5	-.349	.102	.139	-.775
140	6	-.376	.093	-.044	-.694
140	7	.170	.173	.772	-.420
140	8	.261	.189	.943	-.341
140	9	-.350	.096	-.060	-.790
140	10	-.374	.102	.000	-.830

WD	TAP	CPMEAN	CPRMS	CPMAX	CPMIN
140	11	.025	.151	.590	-.521
140	12	.091	.168	.746	-.513
140	13	-.080	.169	.777	-.618
140	14	-.160	.127	.375	-.512
140	15	-.363	.107	-.006	-.739
140	16	-.403	.108	-.021	-.797
140	17	.253	.188	.987	-.325
140	18	.058	.198	.765	-.538
140	19	-.364	.109	.008	-.716
140	20	-.402	.111	.007	-.746
140	21	-.188	.117	.260	-.588
140	22	-.124	.112	.242	-.712
140	23	-.389	.113	-.056	-.867
140	24	-.430	.116	-.090	-.888
140	25	-.398	.152	.325	-1.370
140	26	-.431	.100	.093	-.769
140	27	-.409	.105	-.006	-.777
140	28	-.455	.110	-.087	-.870
140	29	-.345	.181	.531	-.981
140	30	-.442	.136	.167	-1.166
140	31	-.428	.133	-.045	-.902
140	32	-.447	.129	.008	-1.137
140	101	-.339	.093	-.079	-.689
140	102	-.347	.111	.041	-.848
140	103	-.323	.106	-.015	-.718
140	104	-.351	.112	.003	-.801
140	105	-.355	.092	-.068	-.684
140	106	-.300	.132	.113	-.879
140	107	-.338	.120	.032	-.940
140	108	-.331	.101	.016	-.704
140	109	-.246	.120	.147	-.784
140	110	-.121	.128	.311	-.531
140	111	-.156	.124	.300	-.549
140	112	-.282	.128	.130	-.793
140	113	-.356	.097	-.009	-.872
140	114	-.345	.106	.041	-.666
140	115	-.336	.106	.035	-.655
140	116	-.365	.113	.040	-.811
140	117	-.371	.092	-.073	-.724
140	118	-.371	.109	-.030	-.814
140	119	-.147	.145	.385	-.783
140	120	-.218	.142	.245	-.801
140	121	-.061	.144	.562	-.575
140	122	-.363	.111	.026	-.797
140	123	-.376	.114	.014	-.786
140	124	-.274	.100	.070	-.646
140	125	-.367	.095	-.067	-.689
140	126	-.353	.105	-.020	-.719
140	127	-.145	.151	.430	-.634
140	128	-.199	.177	.629	-.787

APPENDIX A -- PRESSURE DATA: CONFIGURATION A; HOUSTON NATIONAL BANK

WD	TAP	CPMEAN	CPRMS	CPMAX	CPMIN
140	129	-.388	.093	-.020	-.721
140	130	-.385	.106	.034	-.786
140	131	-.392	.108	-.036	-.809
140	132	-.355	.099	.009	-.756
140	133	-.373	.092	-.086	-.772
140	134	-.378	.113	-.000	-.791
140	135	-.364	.112	-.007	-.748
140	136	-.370	.112	-.021	-.746
140	137	-.391	.097	-.094	-.760
140	138	-.373	.111	.017	-.794
140	139	-.368	.110	.007	-.785
140	140	-.374	.110	-.027	-.790
140	141	-.416	.093	-.020	-.760
140	142	-.396	.111	-.030	-.874
140	143	-.392	.112	-.024	-.882
140	144	-.405	.117	-.014	-.950
140	145	-.415	.103	-.080	-.828
140	146	-.405	.118	-.032	-.893
140	147	-.397	.119	-.030	-.899
140	148	-.426	.155	.027	-1.236
140	149	-.451	.113	-.144	-.981
140	150	-.418	.149	.047	-1.279
140	151	-.373	.123	.100	-.926
140	152	-.380	.125	.130	-.990
140	153	-.406	.120	.147	-.859
140	154	-.437	.156	.007	-1.201
140	155	-.412	.132	-.005	-1.132
140	156	-.401	.119	-.043	-1.013
140	157	-.468	.105	-.129	-.921
140	158	-.452	.121	-.069	-1.047
140	159	-.366	.146	.118	-1.176
140	160	-.352	.155	.320	-1.040
140	161	-.432	.124	-.044	-1.072
140	162	-.411	.139	.013	-1.131
140	163	-.409	.132	-.024	-.932
140	164	-.425	.113	-.080	-.841
140	165	-.454	.112	-.059	-.909
140	166	-.407	.136	.011	-1.010
140	167	-.404	.132	.007	-.978
140	168	-.411	.132	-.009	-1.041
140	169	-.440	.124	-.050	-1.112
140	170	-.435	.139	.047	-1.059
140	171	-.434	.136	.022	-.970
140	172	-.441	.133	.077	-.921
140	173	-.474	.116	-.036	-.919
140	174	-.528	.164	-.042	-1.381
140	175	-.533	.165	-.038	-1.459
140	176	-.555	.170	-.073	-1.462
140	177	-.504	.125	-.083	-1.065
140	178	-.381	.127	.062	-.896
140	179	-.354	.120	.063	-.783
140	180	-.320	.119	.089	-.771
140	181	-.974	.353	-.298	-2.319
140	182	-.802	.219	-.244	-1.697
140	183	-.481	.152	.023	-1.124
140	184	-.406	.145	.042	-1.020
140	185	-.294	.095	.060	-.602
140	186	-.261	.106	.130	-.608
140	187	-.287	.109	.110	-.654
140	188	-.246	.108	.160	-.610
140	189	-.260	.087	.080	-.566
140	190	-.225	.102	.200	-.573
140	191	-.260	.098	.150	-.592
140	201	-.323	.106	.072	-.681
140	202	-.348	.097	.019	-.683
140	203	-.317	.108	.103	-.679
140	204	-.358	.115	.077	-.757
140	205	-.332	.116	.081	-.741
140	206	-.359	.104	.003	-.769
140	207	-.327	.112	.072	-.755
140	208	-.360	.113	.041	-.770
140	209	-.332	.115	.088	-.762
140	210	-.362	.103	.053	-.701
140	211	-.341	.113	.033	-.775
140	212	-.371	.112	.006	-.761
140	213	-.338	.108	.024	-.657
140	214	-.370	.095	-.011	-.683
140	215	-.337	.106	.062	-.707
140	216	-.382	.111	.003	-.798
140	217	-.346	.108	.032	-.751
140	218	-.386	.093	-.096	-.754
140	219	-.355	.107	.011	-.777
140	220	-.391	.105	-.050	-.823
140	221	-.357	.103	-.020	-.789
140	222	-.380	.089	-.069	-.680
140	223	-.337	.101	.001	-.675
140	224	-.368	.103	-.029	-.725
140	225	-.358	.103	.003	-.718
140	226	-.384	.092	-.095	-.776
140	227	-.344	.101	-.015	-.759
140	228	-.379	.104	-.032	-.826
140	229	-.355	.101	-.017	-.754
140	230	-.386	.092	-.080	-.728
140	231	-.344	.106	-.011	-.754
140	232	-.373	.107	-.059	-.785
140	233	-.341	.104	-.027	-.742
140	234	-.397	.102	-.038	-.814
140	235	-.354	.111	.009	-.800
140	236	-.379	.112	-.013	-.810
140	237	-.344	.108	.049	-.758
140	238	-.430	.095	-.104	-.776
140	239	-.387	.105	-.033	-.780
140	240	-.413	.103	-.048	-.757
140	241	-.365	.100	.001	-.729
140	242	-.372	.090	-.030	-.685
140	243	-.360	.107	-.016	-.763
140	244	-.364	.106	.007	-.741
140	245	-.463	.138	.008	-1.111
140	246	-.427	.089	-.145	-.774
140	247	-.413	.110	-.095	-1.119
140	248	-.453	.133	.011	-1.228
140	249	-.409	.125	.041	-1.101
140	250	-.394	.115	-.075	-.828
140	251	-.403	.116	-.072	-.955
140	252	-.432	.117	-.093	-.973
140	253	-.375	.111	-.017	-.826
140	254	-.382	.097	-.041	-.676
140	255	-.335	.107	.071	-.669
140	256	-.354	.110	.059	-.685
140	257	-.320	.109	.081	-.664
140	258	-.434	.110	-.069	-.876
140	259	-.385	.117	.049	-.873
140	260	-.450	.120	-.040	-.979
140	261	-.440	.121	-.012	-.992
140	262	-.417	.103	-.069	-.772
140	263	-.407	.108	-.041	-.826
140	264	-.413	.109	-.028	-.826
140	265	-.393	.107	.005	-.773
140	266	-.355	.106	.089	-.837
140	267	-.348	.121	.127	-.826
140	268	-.396	.123	.076	-.868
140	269	-.359	.125	.107	-.774
140	270	-.305	.103	.044	-.623
140	271	-.310	.115	.079	-.695
140	272	-.427	.116	-.060	-.800
140	273	-.477	.125	-.121	-.921
140	274	-.418	.105	-.085	-.864
140	275	-.415	.121	-.022	-1.016
140	276	-.467	.126	-.065	-1.065
140	277	-.332	.120	.084	-.747
140	278	-.319	.098	.016	-.644
140	279	-.438	.116	-.028	-.855
140	280	-.260	.112	.098	-.659
140	281	-.269	.103	.053	-.731
140	282	-.231	.094	.083	-.547
140	283	-.269	.111	.127	-.719
140	284	-.355	.117	.041	-.767
140	285	-.404	.115	.001	-.818
140	286	-.423	.113	-.060	-.830
140	287	-.411	.121	-.003	-.813

APPENDIX A -- PRESSURE DATA: CONFIGURATION A: HOUSTON NATIONAL BANK

WD	TAP	CPMEAN	CPRMS	CPMAX	CPMIN
140	288	-.464	.124	-.053	-.873
140	301	-.605	.217	.139	-1.453
140	302	-.349	.134	.067	-.884
140	303	-.333	.173	.205	-1.059
140	304	-.355	.122	.061	-.899
140	305	-.630	.239	.350	-1.411
140	306	-.301	.089	.086	-.678
140	307	-.249	.164	.350	-1.025
140	308	-.686	.289	.251	-1.925
140	309	-.363	.123	.050	-.888
140	310	-.315	.094	.010	-.652
140	311	-.294	.110	.085	-.709
140	312	-.272	.124	.187	-.750
140	313	-.214	.148	.300	-.960
140	314	-.231	.185	.318	-1.048
140	315	-.358	.301	.503	-1.402
140	316	-.915	.500	.492	-2.816
140	317	-.347	.112	.031	-.741
140	318	-.268	.094	.053	-.751
140	319	-.233	.128	.174	-1.188
140	320	-.298	.186	.144	-1.299
140	321	-.386	.277	.230	-1.563
140	322	-.544	.278	.376	-1.838
140	323	-.582	.197	.176	-1.229
140	324	-.381	.118	.064	-1.089
140	325	-.332	.116	.126	-1.024
140	326	-.268	.104	.060	-.732
140	327	-.290	.153	.127	-.981
140	328	-.422	.231	.150	-1.461
140	329	-.616	.244	.224	-1.673
140	330	-.571	.191	.278	-1.428
140	331	-.319	.117	.047	-.674
140	332	-.365	.121	.007	-.740
140	333	-.325	.118	.020	-.695
140	334	-.283	.092	.039	-.618
140	335	-.306	.124	.119	-.893
140	336	-.622	.214	.174	-1.584
140	337	-.648	.201	.165	-1.647
140	338	-.348	.091	-.045	-.642
140	339	-.343	.103	-.002	-.674
140	340	-.383	.108	-.032	-.751
140	341	-.345	.106	-.002	-.724
140	342	-.304	.098	.009	-.687
140	343	-.484	.157	.065	-1.191
140	344	-.608	.158	-.021	-1.453
140	345	-.407	.114	-.034	-.818
140	346	-.342	.094	-.002	-.680
140	347	-.318	.107	.046	-.689
140	348	-.363	.112	.022	-.743
140	349	-.333	.111	.056	-.702

WD	TAP	CPMEAN	CPRMS	CPMAX	CPMIN
140	350	-.302	.112	.065	-.719
140	351	-.429	.140	-.003	-.876
140	352	-.383	.102	.036	-.711
140	353	-.427	.124	.147	-.879
140	354	-.271	.109	.103	-.648
140	355	-.316	.126	.190	-.765
140	356	-.396	.115	.012	-.796
140	357	-.358	.115	.043	-.768
140	358	-.257	.090	.052	-.578
140	359	-.290	.103	.041	-.636
140	360	-.291	.103	.048	-.632
140	361	-.271	.106	.102	-.606
140	362	-.211	.088	.086	-.554
140	401	.320	.174	.920	-.445
140	402	.396	.193	1.102	-.388
140	403	.316	.211	.963	-.357
140	404	.198	.169	.906	-.345
140	405	.075	.176	.806	-.493
140	406	.276	.188	.977	-.305
140	407	.353	.192	1.069	-.214
140	408	.393	.161	.941	-.062
140	409	.136	.150	.707	-.354
140	410	-.004	.134	.521	-.482
140	411	.263	.185	.992	-.250
140	412	.417	.179	1.052	-.200
140	413	.380	.199	1.213	-.359
140	414	.138	.165	1.109	-.319
140	415	.045	.155	.629	-.523
140	416	.275	.172	.887	-.272
140	417	.329	.182	1.098	-.274
140	418	.321	.190	1.015	-.342
140	419	.128	.169	.767	-.426
140	420	.064	.136	.575	-.338
140	421	-.143	.148	.395	-.642
140	422	.232	.235	1.071	-.439
140	423	.127	.155	.739	-.333
140	424	-.055	.133	.424	-.525
140	425	.191	.170	.860	-.320
140	426	.269	.161	.826	-.173
140	427	.329	.173	.997	-.184
140	428	.141	.134	.593	-.318
140	429	.031	.148	.510	-.567
140	430	-.152	.152	.394	-.796
140	431	.320	.195	1.091	-.327
140	432	.033	.122	.487	-.338
140	433	-.133	.123	.352	-.519
140	434	-.149	.179	.519	-.818
140	435	.136	.159	.865	-.349
140	436	-.072	.113	.362	-.488
140	437	-.259	.112	.167	-.679

WD	TAP	CPMEAN	CPRMS	CPMAX	CPMIN
140	438	.111	.167	.747	-.414
140	439	.234	.165	.969	-.254
140	440	.278	.155	.870	-.240
140	441	.156	.162	.718	-.391
140	442	.079	.162	.639	-.646
140	443	-.171	.154	.377	-.783
140	444	-.247	.118	.302	-.666
140	445	-.417	.132	.158	-.893
140	446	-.432	.165	.397	-1.039
140	447	-.424	.174	.352	-1.332
140	448	.050	.138	.626	-.413
140	449	.123	.148	.653	-.412
140	450	.080	.133	.733	-.362
140	451	-.044	.115	.374	-.533
140	452	-.133	.097	.194	-.564
140	453	-.266	.127	.289	-.780
140	454	-.352	.126	.220	-.958
140	455	-.406	.139	.120	-1.191
140	456	-.348	.159	.467	-.948
140	457	-.351	.195	.430	-1.102
140	458	-.382	.155	.027	-1.364
140	459	-.132	.137	.383	-.806
140	460	-.231	.109	.103	-.695
140	461	-.006	.149	.630	-.507
140	462	.032	.144	.677	-.444
140	463	-.045	.118	.362	-.461
140	464	-.161	.096	.171	-.550
140	465	-.191	.110	.192	-.637
140	466	-.249	.115	.138	-.651
140	467	-.295	.127	.058	-.901
140	468	-.396	.110	-.059	-.853
140	469	-.079	.125	.352	-.488
140	470	-.057	.123	.338	-.436
140	471	-.110	.109	.264	-.448
140	472	-.181	.091	.142	-.533
140	473	-.178	.105	.176	-.535
140	474	-.217	.109	.150	-.580
140	475	-.301	.115	.071	-.688
140	476	-.376	.105	.087	-.888
140	477	-.206	.107	.165	-.539
140	478	-.187	.108	.173	-.618
140	479	-.061	.114	.391	-.488
140	480	-.076	.093	.242	-.422
140	481	-.095	.105	.296	-.520
140	483	-.262	.107	.141	-.623
140	484	-.441	.123	-.070	-.896
140	485	-.168	.114	.281	-.585
140	486	-.246	.107	.107	-.657
140	501	-.229	.101	.085	-.629
140	502	-.218	.121	.147	-.770

APPENDIX A -- PRESSURE DATA: CONFIGURATION A; HOUSTON NATIONAL BANK

WD	TAP	CPMEAN	CPRMS	CPMAX	CPMIN
140	503	-.288	.112	.102	-.667
140	504	-.233	.116	.175	-.679
140	505	-.276	.102	.069	-.711
140	506	-.243	.105	.136	-.667
140	507	-.269	.111	.202	-.700
140	508	-.327	.114	.056	-.765
140	509	-.258	.092	.013	-.655
140	510	-.263	.111	.158	-.727
140	511	-.269	.108	.071	-.742
140	512	-.246	.108	.090	-.714
140	601	-.198	.115	.252	-.561
140	602	-.124	.100	.314	-.450
140	603	-.132	.101	.254	-.483
140	604	-.212	.115	.268	-.573
140	605	-.246	.106	.117	-.565
140	606	-.211	.101	.201	-.580
140	607	-.094	.119	.320	-.483
140	608	-.211	.116	.193	-.623
140	609	-.222	.116	.229	-.688
140	610	-.146	.089	.145	-.576
140	611	-.079	.108	.266	-.568
140	612	-.090	.122	.313	-.584
140	613	-.163	.103	.174	-.628
140	614	-.205	.103	.171	-.559
140	615	-.158	.122	.256	-.557
140	701	-.221	.106	.103	-.564
140	702	-.246	.113	.111	-.739
140	703	-.199	.104	.222	-.692
140	704	-.222	.132	.244	-.733
140	705	-.166	.108	.197	-.634
140	706	-.178	.092	.127	-.509
140	707	-.129	.121	.426	-.584
140	708	-.276	.109	.085	-.645
140	709	-.232	.108	.110	-.614
140	710	-.222	.090	.093	-.573
140	711	-.183	.105	.283	-.579
140	712	-.187	.127	.424	-.670
140	801	-.061	.127	.540	-.601
140	802	-.195	.109	.145	-.664
140	803	-.220	.113	.141	-.681
140	804	-.184	.112	.172	-.680
140	805	-.184	.098	.187	-.629
140	806	-.064	.134	.359	-.624
140	807	-.226	.109	.149	-.575
140	808	-.192	.120	.331	-.591
140	809	-.090	.130	.342	-.655
140	810	-.228	.105	.129	-.655
140	811	-.218	.114	.167	-.598
140	812	-.201	.102	.160	-.560
140	813	-.205	.107	.225	-.557

WD	TAP	CPMEAN	CPRMS	CPMAX	CPMIN
140	814	-.087	.131	.325	-.618
140	815	-.266	.105	.030	-.594
140	816	-.199	.115	.208	-.578
140	817	-.210	.088	.105	-.559
140	818	-.218	.122	.201	-.655
140	819	-.118	.131	.294	-.639
140	820	-.217	.112	.217	-.589
140	821	-.194	.092	.118	-.498
140	822	-.197	.103	.173	-.533
140	823	-.254	.106	.105	-.600
140	901	-.175	.137	.313	-.816
140	902	-.221	.109	.134	-.591
140	903	-.183	.093	.085	-.517
140	904	-.089	.132	.365	-.506
140	905	-.199	.112	.175	-.592
140	906	-.066	.128	.424	-.476
140	907	-.212	.092	.111	-.517
140	908	-.136	.118	.325	-.550
140	909	-.102	.117	.347	-.505
140	910	-.211	.106	.161	-.580
140	911	-.123	.095	.265	-.458
140	912	-.202	.111	.160	-.667
140	913	-.239	.116	.208	-.683
140	914	-.217	.115	.169	-.620
140	915	-.231	.108	.157	-.617
150	1	-.346	.106	.027	-.708
150	2	-.376	.097	-.068	-.679
150	3	-.213	.116	.203	-.625
150	4	-.161	.128	.314	-.603
150	5	-.331	.107	.007	-.689
150	6	-.382	.101	-.030	-.744
150	7	.146	.175	.902	-.357
150	8	.225	.183	.902	-.292
150	9	-.351	.092	-.080	-.698
150	10	-.372	.099	.038	-.755
150	11	.105	.160	.574	-.429
150	12	.184	.177	.877	-.412
150	13	-.192	.157	.429	-.714
150	14	-.277	.117	.149	-.639
150	15	-.333	.109	.068	-.736
150	16	-.367	.110	.016	-.750
150	17	.162	.201	1.007	-.461
150	18	-.171	.180	.553	-.690
150	19	-.332	.105	.014	-.774
150	20	-.362	.109	.004	-.796
150	21	-.186	.116	.171	-.582
150	22	-.117	.118	.278	-.564
150	23	-.355	.108	-.024	-.717
150	24	-.389	.112	-.050	-.783
150	25	-.381	.125	-.019	-1.104

WD	TAP	CPMEAN	CPRMS	CPMAX	CPMIN
150	26	-.430	.110	-.073	-.954
150	27	-.375	.119	-.015	-1.010
150	28	-.413	.124	-.011	-.988
150	29	-.368	.139	.327	-1.118
150	30	-.444	.116	-.013	-1.004
150	31	-.414	.119	-.051	-.901
150	32	-.410	.110	.030	-.854
150	101	-.322	.094	-.032	-.614
150	102	-.326	.110	-.001	-.699
150	103	-.309	.107	.007	-.659
150	104	-.330	.113	-.013	-.743
150	105	-.330	.100	.003	-.726
150	106	-.269	.119	.161	-.781
150	107	-.306	.116	.088	-.785
150	108	-.312	.110	.048	-.737
150	109	-.238	.097	.082	-.690
150	110	-.184	.113	.199	-.586
150	111	-.203	.111	.156	-.681
150	112	-.276	.114	.117	-.774
150	113	-.340	.089	-.017	-.692
150	114	-.327	.100	.036	-.725
150	115	-.325	.100	.046	-.719
150	116	-.335	.106	-.016	-.790
150	117	-.347	.089	-.040	-.673
150	118	-.332	.102	-.004	-.734
150	119	-.222	.128	.281	-.790
150	120	-.275	.129	.172	-.832
150	121	-.161	.134	.487	-.601
150	122	-.332	.112	.045	-.710
150	123	-.339	.113	.056	-.743
150	124	-.252	.102	.099	-.594
150	125	-.339	.093	-.003	-.610
150	126	-.321	.104	.057	-.619
150	127	-.211	.148	.358	-.722
150	128	-.263	.170	.409	-.848
150	129	-.344	.089	-.069	-.647
150	130	-.334	.100	-.037	-.655
150	131	-.345	.101	-.031	-.654
150	132	-.317	.096	-.039	-.605
150	133	-.343	.091	-.052	-.701
150	134	-.330	.110	.019	-.756
150	135	-.328	.112	.046	-.775
150	136	-.331	.111	.038	-.772
150	137	-.368	.096	-.055	-.835
150	138	-.349	.107	.012	-.812
150	139	-.349	.106	.018	-.813
150	140	-.351	.107	.013	-.941
150	141	-.384	.098	-.074	-.905
150	142	-.379	.119	.001	-.972
150	143	-.382	.121	-.003	-.995

APPENDIX A -- PRESSURE DATA: CONFIGURATION A: HOUSTON NATIONAL BANK

WD	TAP	CPMEAN	CPRMS	CPMAX	CPMIN
150	144	-.394	.126	-.023	-1.037
150	145	-.396	.099	-.077	-.877
150	146	-.380	.113	-.011	-.922
150	147	-.377	.115	-.016	-1.003
150	148	-.402	.139	.007	-1.365
150	149	-.441	.115	-.151	-.908
150	150	-.404	.141	-.001	-1.082
150	151	-.396	.125	.002	-.941
150	152	-.396	.126	.002	-.963
150	153	-.409	.108	-.032	-.798
150	154	-.385	.135	.084	-1.102
150	155	-.381	.119	.034	-1.086
150	156	-.374	.115	.050	-.855
150	157	-.398	.104	-.049	-.828
150	158	-.378	.118	.009	-1.033
150	159	-.355	.129	.063	-1.074
150	160	-.354	.128	.073	-.978
150	161	-.411	.123	.009	-1.021
150	162	-.381	.126	.019	-.886
150	163	-.387	.122	.013	-1.079
150	164	-.388	.116	.035	-.842
150	165	-.423	.110	-.131	-.831
150	166	-.356	.132	.034	-.806
150	167	-.364	.125	-.019	-.826
150	168	-.365	.124	-.044	-.820
150	169	-.399	.106	-.086	-.940
150	170	-.385	.118	-.004	-.972
150	171	-.393	.117	-.041	-.901
150	172	-.399	.119	-.026	-.911
150	173	-.452	.111	-.006	-.854
150	174	-.523	.152	.055	-1.223
150	175	-.531	.156	.044	-1.269
150	176	-.544	.163	.048	-1.300
150	177	-.536	.127	-.067	-1.002
150	178	-.435	.127	.001	-.903
150	179	-.431	.129	.041	-.967
150	180	-.401	.134	.054	-1.003
150	181	-.815	.300	-.215	-2.335
150	182	-.700	.211	-.196	-1.631
150	183	-.511	.147	-.050	-1.114
150	184	-.441	.142	.001	-1.077
150	185	-.321	.096	.035	-.623
150	186	-.287	.106	.106	-.625
150	187	-.316	.109	.078	-.669
150	188	-.268	.106	.117	-.620
150	189	-.279	.098	.023	-.636
150	190	-.234	.111	.116	-.640
150	191	-.267	.109	.096	-.701
150	201	-.308	.111	.036	-.729
150	202	-.327	.095	-.015	-.623

WD	TAP	CPMEAN	CPRMS	CPMAX	CPMIN
150	203	-.293	.106	.057	-.616
150	204	-.335	.112	.061	-.676
150	205	-.303	.111	.087	-.644
150	206	-.343	.097	-.047	-.704
150	207	-.309	.106	.002	-.666
150	208	-.344	.109	-.040	-.720
150	209	-.307	.108	.005	-.692
150	210	-.328	.094	-.000	-.681
150	211	-.310	.107	.075	-.795
150	212	-.346	.106	.027	-.816
150	213	-.307	.102	.046	-.687
150	214	-.345	.091	-.034	-.695
150	215	-.310	.100	.032	-.687
150	216	-.365	.108	-.021	-.839
150	217	-.328	.105	.008	-.750
150	218	-.361	.088	-.021	-.646
150	219	-.327	.102	.079	-.659
150	220	-.368	.099	.033	-.686
150	221	-.333	.097	.051	-.630
150	222	-.358	.094	-.015	-.747
150	223	-.321	.106	.063	-.764
150	224	-.353	.108	.043	-.804
150	225	-.334	.106	.070	-.806
150	226	-.358	.088	-.046	-.659
150	227	-.323	.097	-.004	-.662
150	228	-.352	.099	-.044	-.703
150	229	-.329	.096	-.025	-.666
150	230	-.356	.097	-.061	-.665
150	231	-.322	.112	.032	-.696
150	232	-.356	.112	-.005	-.740
150	233	-.321	.109	.021	-.699
150	234	-.359	.089	.021	-.671
150	235	-.325	.099	.086	-.661
150	236	-.358	.100	.062	-.689
150	237	-.313	.097	.102	-.649
150	238	-.386	.094	-.038	-.753
150	239	-.350	.105	.020	-.759
150	240	-.383	.104	-.012	-.801
150	241	-.339	.101	.011	-.759
150	242	-.353	.091	.014	-.753
150	243	-.324	.112	.074	-.739
150	244	-.350	.105	.051	-.817
150	245	-.425	.140	-.011	-1.230
150	246	-.392	.102	-.085	-.969
150	247	-.383	.106	-.051	-.802
150	248	-.403	.117	.004	-.868
150	249	-.359	.112	.028	-.763
150	250	-.374	.110	.019	-.780
150	251	-.364	.109	.014	-.814
150	252	-.393	.111	-.013	-.852

WD	TAP	CPMEAN	CPRMS	CPMAX	CPMIN
150	253	-.352	.106	.012	-.769
150	254	-.376	.093	-.054	-.730
150	255	-.333	.103	.024	-.730
150	256	-.354	.106	.004	-.721
150	257	-.317	.105	.030	-.690
150	258	-.392	.104	-.054	-.718
150	259	-.347	.114	.007	-.715
150	260	-.392	.121	-.003	-.826
150	261	-.393	.119	-.006	-.806
150	262	-.381	.098	-.033	-.775
150	263	-.361	.106	.001	-.725
150	264	-.420	.111	-.049	-.892
150	265	-.406	.111	-.022	-.887
150	266	-.351	.094	-.054	-.709
150	267	-.337	.110	.004	-.783
150	268	-.395	.113	-.026	-.846
150	269	-.393	.118	.076	-.858
150	270	-.328	.098	.004	-.635
150	271	-.292	.110	.063	-.657
150	272	-.425	.111	-.082	-.826
150	273	-.459	.122	-.090	-.942
150	274	-.402	.108	-.088	-.812
150	275	-.397	.122	-.042	-.996
150	276	-.458	.127	-.085	-.944
150	277	-.318	.114	.139	-.674
150	278	-.295	.100	.034	-.686
150	279	-.388	.115	.047	-.833
150	280	-.260	.112	.122	-.622
150	281	-.267	.112	.148	-.745
150	282	-.220	.094	.082	-.519
150	283	-.253	.110	.067	-.625
150	284	-.341	.117	.044	-.709
150	285	-.362	.120	.133	-.758
150	286	-.424	.112	-.054	-.765
150	287	-.406	.121	-.034	-.892
150	288	-.469	.125	-.079	-.957
150	301	-.465	.301	.513	-1.555
150	302	-.255	.127	.134	-.735
150	303	-.205	.176	.418	-.787
150	304	-.309	.115	.065	-.704
150	305	-.438	.300	.615	-1.295
150	306	-.268	.098	.036	-.677
150	307	-.111	.145	.356	-.678
150	308	-.398	.321	.652	-1.639
150	309	-.323	.116	.060	-.778
150	310	-.291	.095	.006	-.599
150	311	-.250	.111	.138	-.607
150	312	-.206	.123	.272	-.603
150	313	-.113	.130	.377	-.551
150	314	-.032	.135	.420	-.607

APPENDIX A -- PRESSURE DATA: CONFIGURATION A: HOUSTON NATIONAL BANK

WD	TAP	CPMEAN	CPRMS	CPMAX	CPMIN
150	315	-.037	.234	.636	-1.042
150	316	-.371	.465	.741	-2.521
150	317	-.319	.108	.023	-.757
150	318	-.241	.100	.091	-.557
150	319	-.174	.122	.251	-.663
150	320	-.193	.146	.298	-1.043
150	321	-.190	.224	.483	-1.403
150	322	-.272	.312	.579	-1.549
150	323	-.357	.254	.529	-1.276
150	324	-.357	.118	.025	-.982
150	325	-.296	.116	.079	-.893
150	326	-.218	.102	.162	-.546
150	327	-.192	.128	.332	-.806
150	328	-.251	.187	.321	-1.204
150	329	-.350	.297	.559	-1.291
150	330	-.341	.245	.611	-1.234
150	331	-.311	.106	.041	-.768
150	332	-.360	.110	.009	-.921
150	333	-.307	.111	.086	-.906
150	334	-.259	.104	.094	-.642
150	335	-.250	.138	.242	-1.001
150	336	-.398	.259	.402	-1.401
150	337	-.422	.259	.528	-1.610
150	338	-.346	.102	-.030	-.735
150	339	-.333	.111	.022	-.762
150	340	-.378	.113	.041	-.786
150	341	-.333	.109	.030	-.721
150	342	-.292	.094	.024	-.622
150	343	-.420	.162	.111	-1.191
150	344	-.545	.166	.123	-1.285
150	345	-.392	.104	-.011	-.758
150	346	-.343	.097	-.018	-.647
150	347	-.310	.110	.061	-.656
150	348	-.361	.115	.007	-.730
150	349	-.325	.112	.019	-.699
150	350	-.346	.126	.078	-.777
150	351	-.407	.148	.092	-.933
150	352	-.410	.102	.093	-.774
150	353	-.402	.123	.063	-1.011
150	354	-.336	.101	-.007	-.724
150	355	-.328	.113	.006	-.777
150	356	-.373	.107	-.055	-.731
150	357	-.333	.106	-.016	-.706
150	358	-.300	.091	-.010	-.685
150	359	-.271	.100	.048	-.674
150	360	-.277	.101	.034	-.684
150	361	-.256	.103	.071	-.669
150	362	-.264	.098	.086	-.578
150	401	.395	.194	1.022	-.184
150	402	.435	.211	1.089	-.204

WD	TAP	CPMEAN	CPRMS	CPMAX	CPMIN
150	403	.281	.208	.962	-.400
150	404	.065	.160	.735	-.461
150	405	.003	.162	.637	-.524
150	406	.324	.208	1.070	-.324
150	407	.353	.212	1.064	-.313
150	408	.274	.175	.891	-.198
150	409	.055	.149	.609	-.394
150	410	-.064	.133	.536	-.492
150	411	.340	.192	1.002	-.320
150	412	.361	.172	.944	-.183
150	413	.277	.182	.854	-.276
150	414	.036	.167	.822	-.520
150	415	-.052	.134	.459	-.452
150	416	.269	.191	1.049	-.458
150	417	.277	.216	1.038	-.309
150	418	.240	.202	.921	-.447
150	419	.037	.158	.614	-.594
150	420	-.046	.122	.321	-.467
150	421	-.230	.123	.251	-.614
150	422	.097	.240	.943	-.551
150	423	.144	.161	.798	-.457
150	424	-.067	.137	.424	-.515
150	425	.218	.177	.832	-.331
150	426	.197	.160	.760	-.224
150	427	.274	.198	.925	-.278
150	428	.005	.137	.477	-.500
150	429	-.056	.142	.447	-.605
150	430	-.211	.144	.268	-.823
150	431	.220	.219	1.033	-.633
150	432	-.039	.129	.513	-.497
150	433	-.143	.123	.359	-.596
150	434	-.223	.181	.636	-.971
150	435	.086	.169	.875	-.488
150	436	-.144	.115	.279	-.513
150	437	-.249	.111	.094	-.642
150	438	.124	.174	.861	-.401
150	439	.190	.180	.899	-.254
150	440	.162	.167	.821	-.260
150	441	.074	.157	.715	-.363
150	442	.028	.158	.828	-.665
150	443	-.179	.142	.352	-.781
150	444	-.284	.113	.277	-.780
150	445	-.407	.121	.031	-1.080
150	446	-.428	.135	.181	-1.226
150	447	-.424	.145	.168	-1.192
150	448	.014	.139	.617	-.460
150	449	.054	.139	.630	-.377
150	450	.030	.144	.614	-.474
150	451	-.070	.125	.457	-.574
150	452	-.193	.095	.123	-.505

WD	TAP	CPMEAN	CPRMS	CPMAX	CPMIN
150	453	-.284	.116	.095	-.648
150	454	-.351	.114	.032	-.709
150	455	-.381	.120	.023	-.816
150	456	-.414	.122	.120	-.972
150	457	-.384	.150	.256	-1.112
150	458	-.389	.138	.052	-1.084
150	459	-.201	.140	.369	-.890
150	460	-.280	.115	.170	-.917
150	461	-.014	.141	.597	-.541
150	462	.015	.135	.589	-.464
150	463	-.043	.116	.421	-.443
150	464	-.189	.096	.166	-.540
150	465	-.215	.108	.133	-.588
150	466	-.287	.110	.063	-.710
150	467	-.302	.113	.071	-.735
150	468	-.387	.110	-.008	-.767
150	469	-.107	.131	.371	-.577
150	470	-.091	.127	.403	-.507
150	471	-.108	.117	.261	-.471
150	472	-.193	.098	.188	-.488
150	473	-.187	.110	.223	-.532
150	474	-.236	.114	.177	-.623
150	475	-.313	.115	.068	-.720
150	476	-.415	.103	-.082	-.818
150	477	-.205	.104	.253	-.522
150	478	-.176	.110	.206	-.578
150	479	-.041	.112	.381	-.442
150	480	-.084	.109	.365	-.412
150	481	-.102	.118	.311	-.442
150	483	-.260	.118	.115	-.660
150	484	-.469	.119	-.091	-.909
150	485	-.165	.111	.220	-.568
150	486	-.278	.107	.079	-.669
150	501	-.275	.103	.035	-.692
150	502	-.258	.120	.133	-.705
150	503	-.333	.113	.043	-.840
150	504	-.256	.117	.117	-.665
150	505	-.303	.105	.082	-.815
150	506	-.264	.107	.126	-.705
150	507	-.301	.112	.093	-.783
150	508	-.364	.120	.027	-.797
150	509	-.287	.088	.059	-.652
150	510	-.282	.107	.131	-.754
150	511	-.304	.106	.094	-.738
150	512	-.274	.104	.136	-.714
150	601	-.236	.119	.177	-.616
150	602	-.150	.107	.234	-.541
150	603	-.144	.104	.242	-.486
150	604	-.203	.134	.217	-.702
150	605	-.241	.112	.188	-.612

APPENDIX A -- PRESSURE DATA: CONFIGURATION A; HOUSTON NATIONAL BANK

WD	TAP	CPMEAN	CPRMS	CPMAX	CPMIN
150	606	-.230	.097	.080	-.545
150	607	-.085	.114	.282	-.488
150	608	-.221	.113	.149	-.609
150	609	-.243	.114	.140	-.636
150	610	-.155	.088	.166	-.426
150	611	-.066	.111	.475	-.419
150	612	-.074	.123	.409	-.508
150	613	-.154	.103	.153	-.489
150	614	-.237	.103	.111	-.570
150	615	-.162	.117	.237	-.611
150	701	-.218	.112	.162	-.639
150	702	-.231	.108	.126	-.664
150	703	-.185	.108	.180	-.607
150	704	-.238	.120	.182	-.718
150	705	-.172	.110	.169	-.627
150	706	-.185	.092	.099	-.548
150	707	-.153	.119	.241	-.538
150	708	-.310	.119	.068	-.757
150	709	-.230	.111	.130	-.682
150	710	-.211	.094	.120	-.514
150	711	-.182	.108	.168	-.545
150	712	-.210	.125	.181	-.710
150	801	-.074	.117	.337	-.522
150	802	-.194	.111	.188	-.516
150	803	-.276	.115	.086	-.678
150	804	-.222	.117	.150	-.619
150	805	-.218	.107	.146	-.623
150	806	-.091	.137	.518	-.568
150	807	-.276	.114	.141	-.699
150	808	-.222	.127	.220	-.691
150	809	-.100	.120	.355	-.562
150	810	-.255	.107	.090	-.632
150	811	-.282	.118	.163	-.704
150	812	-.226	.104	.150	-.611
150	813	-.217	.108	.184	-.631
150	814	-.091	.121	.302	-.756
150	815	-.313	.115	.050	-.813
150	816	-.231	.113	.137	-.656
150	817	-.239	.086	.016	-.546
150	818	-.244	.126	.277	-.643
150	819	-.149	.134	.237	-.605
150	820	-.252	.113	.103	-.594
150	821	-.235	.099	.160	-.591
150	822	-.218	.110	.171	-.610
150	823	-.289	.117	.185	-.694
150	901	-.186	.137	.447	-.661
150	902	-.218	.107	.166	-.576
150	903	-.177	.089	.150	-.465
150	904	-.072	.120	.442	-.445
150	905	-.234	.111	.226	-.581
150	906	-.049	.121	.484	-.403
150	907	-.267	.096	.027	-.719
150	908	-.151	.116	.260	-.589
150	909	-.117	.112	.251	-.489
150	910	-.256	.106	.059	-.726
150	911	-.128	.094	.179	-.501
150	912	-.206	.109	.122	-.573
150	913	-.271	.115	.159	-.744
150	914	-.239	.112	.173	-.639
150	915	-.251	.101	.121	-.596
160	1	-.308	.111	.032	-.789
160	2	-.340	.105	-.014	-.906
160	3	-.228	.119	.191	-.621
160	4	-.206	.127	.275	-.570
160	5	-.306	.114	.046	-.734
160	6	-.325	.097	.014	-.682
160	7	.033	.154	.609	-.521
160	8	.067	.159	.671	-.468
160	9	-.325	.097	.003	-.693
160	10	-.333	.099	.049	-.657
160	11	.082	.205	.931	-.666
160	12	.121	.189	.881	-.490
160	13	-.287	.139	.261	-.830
160	14	-.312	.110	.124	-.692
160	15	-.307	.111	.070	-.674
160	16	-.344	.114	.020	-.728
160	17	-.008	.214	.779	-.606
160	18	-.269	.147	.344	-.886
160	19	-.308	.107	.008	-.764
160	20	-.339	.110	-.023	-.778
160	21	-.167	.115	.173	-.597
160	22	-.171	.128	.241	-.620
160	23	-.315	.112	.021	-.800
160	24	-.356	.113	-.008	-.816
160	25	-.337	.121	.027	-.864
160	26	-.371	.099	-.061	-.758
160	27	-.326	.105	.027	-.654
160	28	-.357	.109	-.037	-.727
160	29	-.340	.119	.029	-.981
160	30	-.386	.109	.009	-.961
160	31	-.344	.111	.039	-.719
160	32	-.364	.113	.021	-.774
160	101	-.290	.096	-.008	-.642
160	102	-.279	.110	.061	-.742
160	103	-.273	.108	.046	-.712
160	104	-.276	.110	.051	-.790
160	105	-.303	.097	.006	-.690
160	106	-.256	.110	.138	-.666
160	107	-.279	.110	.050	-.683
160	108	-.281	.105	.044	-.637
160	109	-.270	.099	.065	-.681
160	110	-.245	.114	.154	-.701
160	111	-.257	.114	.157	-.726
160	112	-.279	.113	.118	-.723
160	113	-.299	.094	-.011	-.597
160	114	-.283	.105	.040	-.605
160	115	-.286	.106	.040	-.602
160	116	-.284	.108	.051	-.632
160	117	-.318	.093	-.051	-.662
160	118	-.289	.104	.012	-.651
160	119	-.258	.119	.162	-.625
160	120	-.276	.121	.128	-.672
160	121	-.248	.122	.295	-.628
160	122	-.286	.114	.027	-1.074
160	123	-.288	.108	.013	-.706
160	124	-.215	.106	.071	-.655
160	125	-.303	.088	-.008	-.642
160	126	-.283	.099	.066	-.654
160	127	-.276	.137	.180	-.780
160	128	-.296	.146	.183	-.884
160	129	-.301	.089	.025	-.640
160	130	-.296	.101	.060	-.662
160	131	-.312	.102	.070	-.716
160	132	-.293	.097	.099	-.624
160	133	-.313	.089	-.004	-.602
160	134	-.282	.107	.058	-.680
160	135	-.289	.108	.078	-.703
160	136	-.287	.106	.071	-.714
160	137	-.305	.093	.006	-.718
160	138	-.289	.106	.067	-.752
160	139	-.295	.105	.076	-.674
160	140	-.293	.103	.065	-.633
160	141	-.333	.096	-.018	-.727
160	142	-.317	.111	.069	-.770
160	143	-.325	.112	.055	-.778
160	144	-.327	.112	.026	-.781
160	145	-.333	.094	.003	-.639
160	146	-.315	.108	.066	-.729
160	147	-.320	.109	.055	-.723
160	148	-.332	.116	.036	-.929
160	149	-.340	.091	-.026	-.759
160	150	-.310	.112	.076	-.880
160	151	-.321	.112	.072	-.783
160	152	-.315	.112	.078	-.812
160	153	-.352	.105	.127	-.735
160	154	-.324	.122	.091	-.803
160	155	-.325	.106	.047	-.729
160	156	-.309	.108	.081	-.681
160	157	-.324	.092	-.023	-.637
160	158	-.305	.104	.039	-.775

APPENDIX A -- PRESSURE DATA: CONFIGURATION A; HOUSTON NATIONAL BANK

WD	TAP	CPMEAN	CPRMS	CPMAX	CPMIN
160	159	-.321	.118	.073	-.898
160	160	-.316	.118	.081	-.870
160	161	-.355	.117	-.023	-1.103
160	162	-.316	.109	.010	-.722
160	163	-.327	.106	-.022	-.702
160	164	-.305	.103	.078	-.669
160	165	-.329	.101	.051	-.714
160	166	-.284	.118	.160	-.934
160	167	-.279	.115	.108	-.900
160	168	-.276	.113	.096	-.926
160	169	-.322	.104	.048	-.756
160	170	-.307	.114	.103	-.725
160	171	-.322	.115	.105	-.713
160	172	-.322	.114	.109	-.743
160	173	-.349	.095	-.009	-.687
160	174	-.415	.127	-.077	-1.003
160	175	-.427	.128	-.079	-1.089
160	176	-.436	.135	-.077	-.925
160	177	-.452	.114	-.141	-.975
160	178	-.380	.113	-.030	-.841
160	179	-.397	.119	-.019	-.816
160	180	-.373	.121	.022	-.911
160	181	-.559	.217	-.095	-1.483
160	182	-.547	.162	-.138	-1.151
160	183	-.447	.138	-.022	-1.048
160	184	-.401	.130	.019	-.971
160	185	-.313	.086	-.012	-.680
160	186	-.280	.096	.061	-.693
160	187	-.308	.099	.038	-.749
160	188	-.261	.096	.050	-.700
160	189	-.269	.089	.055	-.643
160	190	-.230	.103	.130	-.670
160	191	-.264	.101	.095	-.669
160	201	-.283	.101	.039	-.685
160	202	-.309	.093	-.031	-.633
160	203	-.273	.105	.053	-.627
160	204	-.311	.109	-.002	-.656
160	205	-.279	.108	.042	-.645
160	206	-.310	.093	.003	-.616
160	207	-.278	.102	.057	-.602
160	208	-.312	.106	.034	-.656
160	209	-.277	.105	.059	-.628
160	210	-.301	.093	.004	-.645
160	211	-.291	.102	.068	-.652
160	212	-.326	.101	.030	-.689
160	213	-.288	.100	.055	-.624
160	214	-.306	.096	.015	-.673
160	215	-.273	.106	.086	-.681
160	216	-.335	.117	.038	-1.042
160	217	-.299	.113	.055	-.822
160	218	-.313	.095	.004	-.682
160	219	-.279	.108	.089	-.720
160	220	-.321	.106	.085	-.712
160	221	-.289	.104	.115	-.673
160	222	-.308	.093	.009	-.642
160	223	-.270	.104	.116	-.608
160	224	-.303	.107	.108	-.639
160	225	-.286	.105	.069	-.640
160	226	-.311	.095	-.000	-.738
160	227	-.278	.104	.034	-.697
160	228	-.306	.107	.051	-.680
160	229	-.288	.106	.039	-.672
160	230	-.300	.089	-.016	-.646
160	231	-.267	.102	.047	-.645
160	232	-.300	.102	.008	-.655
160	233	-.266	.100	.029	-.609
160	234	-.313	.091	-.042	-.607
160	235	-.282	.101	.019	-.614
160	236	-.316	.103	-.010	-.659
160	237	-.273	.099	.028	-.599
160	238	-.323	.089	.022	-.652
160	239	-.290	.100	.096	-.665
160	240	-.325	.101	.061	-.730
160	241	-.286	.100	.097	-.703
160	242	-.297	.089	-.036	-.627
160	243	-.291	.112	.089	-.667
160	244	-.297	.103	-.002	-.696
160	245	-.373	.122	.036	-.921
160	246	-.337	.090	-.092	-.641
160	247	-.317	.095	.047	-.665
160	248	-.331	.103	.151	-.710
160	249	-.293	.100	.164	-.658
160	250	-.302	.107	.119	-.658
160	251	-.285	.102	.086	-.648
160	252	-.318	.104	.058	-.696
160	253	-.280	.101	.091	-.687
160	254	-.309	.092	.001	-.652
160	255	-.269	.104	.057	-.678
160	256	-.297	.107	.045	-.773
160	257	-.262	.105	.085	-.715
160	258	-.317	.090	.051	-.661
160	259	-.278	.101	.126	-.644
160	260	-.310	.106	.101	-.740
160	261	-.304	.101	.064	-.699
160	262	-.308	.097	.013	-.651
160	263	-.301	.109	.038	-.671
160	264	-.376	.117	.098	-.759
160	265	-.342	.115	.048	-.713
160	266	-.306	.093	.053	-.639
160	267	-.289	.107	.118	-.699
160	268	-.352	.111	.055	-.766
160	269	-.351	.108	.002	-.767
160	270	-.311	.092	-.000	-.645
160	271	-.279	.101	.087	-.675
160	272	-.385	.102	-.065	-.765
160	273	-.385	.109	-.043	-.842
160	274	-.346	.114	-.002	-.993
160	275	-.327	.125	.081	-.895
160	276	-.392	.131	.033	-.991
160	277	-.306	.112	.093	-.727
160	278	-.300	.094	.009	-.681
160	279	-.346	.110	-.014	-.806
160	280	-.254	.107	.083	-.687
160	281	-.272	.108	.115	-.716
160	282	-.237	.096	.087	-.525
160	283	-.246	.109	.108	-.654
160	284	-.337	.115	.048	-.750
160	285	-.319	.114	.072	-.731
160	286	-.333	.106	.030	-.773
160	287	-.331	.120	.069	-.859
160	288	-.397	.125	.016	-.932
160	301	-.119	.313	.714	-1.385
160	302	-.114	.117	.329	-.551
160	303	.017	.164	.647	-.724
160	304	-.222	.121	.246	-.605
160	305	.045	.288	.884	-1.179
160	306	-.217	.093	.118	-.569
160	307	.010	.150	.557	-.503
160	308	-.020	.322	.894	-1.294
160	309	-.288	.117	.150	-.673
160	310	-.239	.096	.101	-.543
160	311	-.181	.115	.244	-.568
160	312	-.106	.142	.407	-.543
160	313	.008	.157	.592	-.519
160	314	.085	.150	.676	-.453
160	315	.150	.215	.874	-.903
160	316	.067	.320	.886	-1.388
160	317	-.260	.109	.137	-.688
160	318	-.183	.099	.189	-.559
160	319	-.093	.126	.514	-.570
160	320	-.090	.148	.478	-.681
160	321	-.011	.172	.595	-.938
160	322	.008	.281	.872	-1.457
160	323	-.044	.281	.666	-1.038
160	324	-.321	.114	.144	-.776
160	325	-.248	.112	.192	-.657
160	326	-.162	.108	.231	-.554
160	327	-.115	.133	.385	-.589
160	328	-.135	.168	.476	-.902
160	329	-.084	.268	.647	-1.112

APPENDIX A -- PRESSURE DATA: CONFIGURATION A; HOUSTON NATIONAL BANK

WD	TAP	CPMEAN	CPRMS	CPMAX	CPMIN
160	330	-.112	.247	.555	-1.063
160	331	-.274	.109	.096	-.629
160	332	-.330	.114	.057	-.705
160	333	-.269	.112	.081	-.633
160	334	-.222	.102	.107	-.581
160	335	-.189	.124	.208	-.690
160	336	-.251	.219	.454	-1.394
160	337	-.261	.250	.617	-1.491
160	338	-.284	.099	.112	-.676
160	339	-.273	.109	.137	-.696
160	340	-.338	.114	.051	-.742
160	341	-.293	.109	.063	-.681
160	342	-.259	.103	.110	-.667
160	343	-.313	.166	.232	-.986
160	344	-.437	.187	.274	-1.142
160	345	-.346	.112	.035	-.798
160	346	-.292	.088	.023	-.580
160	347	-.269	.100	.097	-.594
160	348	-.332	.107	.066	-.717
160	349	-.298	.105	.066	-.692
160	350	-.383	.118	-.039	-1.059
160	351	-.398	.131	.012	-1.105
160	352	-.393	.096	-.018	-.724
160	353	-.363	.106	-.024	-.750
160	354	-.356	.102	.030	-.669
160	355	-.321	.110	.110	-.698
160	356	-.315	.110	.099	-.702
160	357	-.292	.109	.131	-.676
160	358	-.305	.095	-.010	-.642
160	359	-.259	.102	.050	-.632
160	360	-.262	.102	.037	-.622
160	361	-.252	.104	.081	-.627
160	362	-.277	.092	.058	-.572
160	401	.394	.222	1.192	-.429
160	402	.361	.220	1.164	-.380
160	403	.165	.190	.918	-.362
160	404	-.080	.133	.383	-.484
160	405	-.106	.134	.413	-.579
160	406	.278	.197	.977	-.467
160	407	.260	.187	.891	-.254
160	408	.126	.147	.668	-.300
160	409	-.059	.127	.497	-.415
160	410	-.148	.117	.387	-.492
160	411	.303	.197	.997	-.709
160	412	.261	.176	.967	-.286
160	413	.140	.158	.719	-.291
160	414	-.052	.143	.508	-.518
160	415	-.139	.126	.355	-.535
160	416	.279	.169	.947	-.332
160	417	.174	.184	.985	-.392
160	418	.140	.152	.732	-.367
160	419	-.069	.137	.472	-.529
160	420	-.209	.116	.194	-.587
160	421	-.298	.111	.110	-.660
160	422	-.210	.184	.569	-.703
160	423	-.042	.174	.543	-.666
160	424	-.126	.139	.429	-.642
160	425	.244	.170	.909	-.369
160	426	.172	.152	.825	-.362
160	427	.130	.159	.757	-.363
160	428	-.099	.132	.468	-.520
160	429	-.143	.140	.486	-.605
160	430	-.275	.139	.272	-.762
160	431	.029	.235	.869	-.645
160	432	-.086	.115	.316	-.439
160	433	-.156	.109	.174	-.516
160	434	-.308	.171	.254	-1.034
160	435	.013	.135	.565	-.384
160	436	-.174	.116	.289	-.566
160	437	-.231	.110	.169	-.617
160	438	.137	.174	.939	-.437
160	439	.154	.163	1.024	-.363
160	440	.056	.136	.582	-.367
160	441	-.034	.141	.508	-.512
160	442	-.043	.138	.567	-.528
160	443	-.190	.126	.200	-.675
160	444	-.286	.117	.313	-.907
160	445	-.345	.125	.035	-.914
160	446	-.361	.131	.024	-.952
160	447	-.363	.140	.147	-1.123
160	448	.057	.152	.660	-.435
160	449	.085	.152	.645	-.402
160	450	-.015	.126	.548	-.401
160	451	-.101	.119	.468	-.461
160	452	-.205	.100	.137	-.546
160	453	-.264	.111	.101	-.704
160	454	-.311	.109	.061	-.736
160	455	-.329	.114	.054	-.772
160	456	-.396	.116	-.024	-.858
160	457	-.348	.136	.121	-.963
160	458	-.352	.133	.052	-1.040
160	459	-.211	.127	.227	-.694
160	460	-.297	.113	.118	-.720
160	461	-.001	.142	.598	-.478
160	462	.007	.131	.642	-.454
160	463	-.061	.115	.354	-.486
160	464	-.177	.090	.112	-.480
160	465	-.207	.102	.129	-.529
160	466	-.281	.104	.068	-.591
160	467	-.265	.107	.071	-.687
160	468	-.332	.103	.015	-.671
160	469	-.123	.130	.396	-.595
160	470	-.116	.124	.343	-.587
160	471	-.110	.113	.260	-.547
160	472	-.176	.091	.111	-.520
160	473	-.183	.103	.153	-.571
160	474	-.240	.106	.107	-.674
160	475	-.295	.105	.058	-.786
160	476	-.357	.099	-.058	-.737
160	477	-.209	.104	.186	-.544
160	478	-.170	.111	.177	-.512
160	479	-.043	.113	.342	-.379
160	480	-.082	.098	.240	-.385
160	481	-.105	.110	.259	-.444
160	483	-.232	.110	.098	-.592
160	484	-.370	.107	-.012	-.703
160	485	-.144	.112	.256	-.553
160	486	-.272	.108	.097	-.667
160	501	-.284	.103	.092	-.756
160	502	-.273	.119	.149	-.749
160	503	-.360	.118	.040	-.775
160	504	-.256	.119	.150	-.684
160	505	-.297	.100	.049	-.695
160	506	-.258	.103	.074	-.724
160	507	-.297	.107	.062	-.767
160	508	-.331	.108	-.002	-.750
160	509	-.271	.086	.000	-.620
160	510	-.271	.112	.099	-.996
160	511	-.303	.102	.054	-.707
160	512	-.257	.100	.056	-.678
160	601	-.248	.110	.121	-.693
160	602	-.159	.101	.230	-.478
160	603	-.141	.104	.207	-.500
160	604	-.198	.128	.261	-.740
160	605	-.228	.109	.113	-.598
160	606	-.228	.089	.100	-.505
160	607	-.090	.109	.285	-.455
160	608	-.234	.106	.095	-.649
160	609	-.235	.104	.145	-.593
160	610	-.154	.091	.133	-.435
160	611	-.064	.118	.418	-.433
160	612	-.095	.129	.530	-.506
160	613	-.156	.106	.189	-.547
160	614	-.213	.106	.140	-.592
160	615	-.127	.122	.325	-.514
160	701	-.188	.103	.185	-.540
160	702	-.225	.117	.111	-.745
160	703	-.158	.105	.207	-.490
160	704	-.251	.126	.145	-.728
160	705	-.160	.108	.197	-.532

APPENDIX A -- PRESSURE DATA: CONFIGURATION A; HOUSTON NATIONAL BANK

WD	TAP	CPMEAN	CPRMS	CPMAX	CPMIN
160	706	-.197	.085	.057	-.503
160	707	-.160	.104	.159	-.561
160	708	-.324	.109	.030	-.711
160	709	-.227	.102	.104	-.610
160	710	-.209	.084	.075	-.536
160	711	-.179	.096	.151	-.540
160	712	-.223	.113	.181	-.637
160	801	-.087	.108	.380	-.443
160	802	-.162	.112	.294	-.490
160	803	-.283	.116	.123	-.623
160	804	-.234	.113	.138	-.587
160	805	-.233	.098	.117	-.609
160	806	-.093	.127	.407	-.538
160	807	-.296	.104	.126	-.678
160	808	-.232	.116	.156	-.632
160	809	-.094	.107	.326	-.448
160	810	-.232	.103	.180	-.575
160	811	-.329	.114	.140	-.723
160	812	-.224	.097	.183	-.532
160	813	-.255	.098	.084	-.576
160	814	-.093	.121	.588	-.556
160	815	-.322	.106	.002	-.706
160	816	-.266	.102	.043	-.628
160	817	-.232	.080	.016	-.495
160	818	-.228	.110	.226	-.667
160	819	-.185	.124	.233	-.619
160	820	-.250	.104	.081	-.578
160	821	-.251	.090	.070	-.544
160	822	-.206	.099	.160	-.578
160	823	-.296	.107	.153	-.737
160	901	-.195	.133	.354	-.643
160	902	-.185	.111	.162	-.579
160	903	-.170	.083	.140	-.419
160	904	-.061	.111	.361	-.400
160	905	-.242	.106	.139	-.618
160	906	-.051	.112	.355	-.378
160	907	-.276	.092	-.014	-.619
160	908	-.132	.114	.441	-.557
160	909	-.127	.117	.434	-.533
160	910	-.252	.102	.052	-.616
160	911	-.136	.095	.185	-.457
160	912	-.184	.110	.188	-.589
160	913	-.300	.122	.109	-.796
160	914	-.249	.114	.183	-.635
160	915	-.240	.108	.133	-.664
170	1	-.284	.111	.104	-.868
170	2	-.319	.100	-.014	-.681
170	3	-.222	.114	.160	-.626
170	4	-.215	.117	.195	-.666
170	5	-.288	.111	.046	-.713
170	6	-.303	.095	-.036	-.606
170	7	.058	.135	.699	-.340
170	8	.096	.146	.644	-.306
170	9	-.300	.100	.018	-.691
170	10	-.310	.101	.013	-.654
170	11	.125	.217	.866	-.577
170	12	.185	.203	.894	-.463
170	13	-.314	.126	.123	-.761
170	14	-.321	.110	.098	-.683
170	15	-.287	.118	.186	-.704
170	16	-.331	.119	.138	-.712
170	17	-.126	.178	.547	-.667
170	18	-.319	.114	.063	-.763
170	19	-.280	.115	.119	-.796
170	20	-.318	.117	.082	-.844
170	21	-.151	.117	.261	-.513
170	22	-.250	.116	.234	-.612
170	23	-.298	.114	.115	-.651
170	24	-.345	.117	.046	-.718
170	25	-.312	.118	.067	-.979
170	26	-.340	.098	.006	-.792
170	27	-.304	.108	.104	-.662
170	28	-.340	.113	.058	-.716
170	29	-.319	.120	.157	-1.380
170	30	-.352	.110	.038	-.773
170	31	-.322	.115	.032	-.696
170	32	-.348	.122	.084	-.764
170	101	-.260	.099	.148	-.637
170	102	-.241	.110	.230	-.668
170	103	-.243	.110	.230	-.666
170	104	-.234	.110	.230	-.650
170	105	-.250	.092	.124	-.587
170	106	-.217	.102	.172	-.616
170	107	-.231	.102	.182	-.622
170	108	-.229	.100	.180	-.614
170	109	-.279	.090	.036	-.623
170	110	-.261	.102	.159	-.619
170	111	-.270	.103	.164	-.635
170	112	-.264	.103	.138	-.636
170	113	-.274	.093	.070	-.584
170	114	-.250	.103	.152	-.614
170	115	-.260	.105	.161	-.638
170	116	-.261	.113	.155	-.694
170	117	-.295	.104	.082	-.688
170	118	-.263	.114	.154	-.658
170	119	-.273	.120	.176	-.662
170	120	-.271	.121	.176	-.667
170	121	-.289	.103	.044	-.617
170	122	-.259	.112	.134	-.661
170	123	-.266	.110	.131	-.633
170	124	-.190	.104	.183	-.561
170	125	-.281	.098	.027	-.680
170	126	-.257	.108	.105	-.699
170	127	-.286	.126	.171	-.821
170	128	-.298	.130	.180	-.771
170	129	-.263	.095	.047	-.579
170	130	-.254	.105	.086	-.592
170	131	-.277	.108	.062	-.657
170	132	-.254	.105	.101	-.621
170	133	-.273	.089	.015	-.594
170	134	-.236	.099	.122	-.554
170	135	-.248	.099	.101	-.581
170	136	-.240	.098	.108	-.570
170	137	-.282	.096	.024	-.635
170	138	-.260	.107	.077	-.666
170	139	-.275	.107	.066	-.665
170	140	-.269	.107	.072	-.643
170	141	-.310	.097	.012	-.673
170	142	-.288	.116	.070	-.913
170	143	-.303	.119	.067	-.950
170	144	-.298	.127	.069	-1.766
170	145	-.301	.095	.009	-.635
170	146	-.278	.107	.068	-.657
170	147	-.290	.109	.077	-.755
170	148	-.295	.113	.068	-.810
170	149	-.298	.086	-.018	-.602
170	150	-.267	.107	.067	-.661
170	151	-.286	.109	.050	-.694
170	152	-.272	.108	.061	-.676
170	153	-.309	.096	.082	-.643
170	154	-.282	.110	.149	-.666
170	155	-.294	.102	.074	-.689
170	156	-.268	.103	.136	-.578
170	157	-.298	.090	.005	-.703
170	158	-.272	.100	.067	-.819
170	159	-.304	.119	.097	-1.053
170	160	-.294	.121	.106	-1.160
170	161	-.307	.110	.032	-.863
170	162	-.271	.108	.089	-.626
170	163	-.288	.108	.056	-.653
170	164	-.256	.108	.099	-.645
170	165	-.281	.102	.030	-.628
170	166	-.257	.117	.121	-.626
170	167	-.246	.115	.144	-.624
170	168	-.237	.113	.140	-.582
170	169	-.277	.097	.021	-.637
170	170	-.262	.107	.073	-.660
170	171	-.282	.107	.041	-.704
170	172	-.275	.107	.034	-.741
170	173	-.313	.100	.048	-.626

APPENDIX A -- PRESSURE DATA: CONFIGURATION A: HOUSTON NATIONAL BANK

WD	TAP	CPMEAN	CPRMS	CPMAX	CPMIN
170	174	-.344	.132	.073	-1.031
170	175	-.362	.134	.069	-1.090
170	176	-.371	.146	.062	-1.610
170	177	-.404	.117	.020	-.873
170	178	-.344	.117	.093	-.848
170	179	-.374	.123	.059	-.775
170	180	-.351	.121	.054	-.774
170	181	-.425	.165	-.067	-1.524
170	182	-.429	.137	-.072	-.954
170	183	-.377	.125	-.020	-.923
170	184	-.343	.120	.047	-.798
170	185	-.297	.097	.034	-.623
170	186	-.271	.108	.088	-.641
170	187	-.304	.111	.076	-.696
170	188	-.263	.109	.123	-.621
170	189	-.267	.093	.008	-.625
170	190	-.232	.106	.099	-.612
170	191	-.266	.104	.058	-.652
170	201	-.274	.114	.092	-.788
170	202	-.274	.097	.023	-.642
170	203	-.247	.109	.081	-.603
170	204	-.281	.111	.055	-.626
170	205	-.250	.110	.082	-.595
170	206	-.289	.095	-.013	-.580
170	207	-.263	.104	.040	-.580
170	208	-.296	.107	.067	-.617
170	209	-.262	.106	.135	-.586
170	210	-.277	.098	.022	-.637
170	211	-.272	.115	.067	-.766
170	212	-.310	.115	.025	-.799
170	213	-.270	.110	.062	-.609
170	214	-.294	.099	.079	-.635
170	215	-.263	.110	.161	-.636
170	216	-.342	.119	.134	-.716
170	217	-.306	.115	.166	-.670
170	218	-.326	.105	.110	-.688
170	219	-.292	.118	.167	-.722
170	220	-.330	.120	.158	-.799
170	221	-.297	.116	.190	-.723
170	222	-.288	.099	.026	-.657
170	223	-.248	.110	.117	-.648
170	224	-.277	.113	.085	-.677
170	225	-.271	.115	.059	-.823
170	226	-.305	.096	-.002	-.642
170	227	-.270	.105	.082	-.621
170	228	-.294	.108	.052	-.628
170	229	-.280	.107	.057	-.701
170	230	-.298	.096	-.011	-.696
170	231	-.265	.110	.094	-.707
170	232	-.295	.110	.046	-.741
170	233	-.263	.108	.069	-.699
170	234	-.307	.096	-.003	-.623
170	235	-.278	.106	.073	-.642
170	236	-.308	.107	.043	-.662
170	237	-.262	.105	.078	-.589
170	238	-.318	.105	.011	-.772
170	239	-.289	.116	.073	-.710
170	240	-.324	.117	.064	-.738
170	241	-.281	.114	.081	-.695
170	242	-.287	.094	.017	-.611
170	243	-.258	.109	.170	-.645
170	244	-.286	.110	.092	-.690
170	245	-.351	.118	.040	-.834
170	246	-.310	.083	-.070	-.682
170	247	-.296	.104	.045	-.668
170	248	-.309	.113	.024	-.710
170	249	-.271	.111	.054	-.655
170	250	-.279	.111	.092	-.622
170	251	-.273	.106	.109	-.612
170	252	-.305	.109	.091	-.634
170	253	-.268	.105	.112	-.605
170	254	-.280	.103	.037	-.679
170	255	-.248	.115	.109	-.673
170	256	-.275	.118	.079	-.693
170	257	-.242	.116	.119	-.661
170	258	-.301	.094	-.011	-.589
170	259	-.268	.104	.057	-.599
170	260	-.300	.111	.077	-.652
170	261	-.290	.107	.045	-.617
170	262	-.280	.096	.021	-.607
170	263	-.271	.107	.060	-.641
170	264	-.342	.114	.004	-.742
170	265	-.302	.112	.057	-.732
170	266	-.273	.101	.042	-.683
170	267	-.263	.115	.123	-.747
170	268	-.329	.119	.094	-.820
170	269	-.333	.119	.056	-.695
170	270	-.269	.099	.100	-.594
170	271	-.253	.112	.145	-.653
170	272	-.354	.115	.032	-.762
170	273	-.351	.124	.034	-.829
170	274	-.319	.113	.045	-.834
170	275	-.306	.125	.095	-.814
170	276	-.376	.133	.054	-.910
170	277	-.296	.113	.057	-.672
170	278	-.263	.100	.054	-.720
170	279	-.290	.115	.117	-.810
170	280	-.242	.111	.101	-.628
170	281	-.255	.115	.107	-.760
170	282	-.229	.106	.116	-.632
170	283	-.235	.112	.167	-.680
170	284	-.327	.118	.091	-.769
170	285	-.291	.112	.148	-.706
170	286	-.293	.110	.071	-.709
170	287	-.300	.138	.127	-1.208
170	288	-.374	.145	.070	-1.377
170	301	.146	.240	.870	-1.078
170	302	-.024	.126	.502	-.410
170	303	.126	.162	.851	-.375
170	304	-.154	.133	.406	-.626
170	305	.233	.215	1.092	-.678
170	306	-.170	.105	.205	-.524
170	307	.127	.162	.758	-.311
170	308	.250	.257	1.067	-.744
170	309	-.238	.121	.240	-.642
170	310	-.199	.103	.149	-.541
170	311	-.125	.125	.320	-.542
170	312	-.022	.153	.512	-.512
170	313	.117	.167	.746	-.379
170	314	.211	.156	.825	-.304
170	315	.330	.199	1.099	-.358
170	316	.310	.241	1.181	-.908
170	317	-.246	.114	.177	-.583
170	318	-.148	.105	.307	-.492
170	319	-.029	.132	.596	-.458
170	320	-.009	.150	.582	-.511
170	321	.105	.156	.744	-.411
170	322	.169	.188	.862	-.832
170	323	.190	.202	.809	-.888
170	324	-.295	.117	.142	-.728
170	325	-.214	.115	.329	-.640
170	326	-.138	.101	.310	-.453
170	327	-.086	.118	.399	-.475
170	328	-.091	.130	.383	-.506
170	329	.012	.176	.539	-.957
170	330	-.020	.204	.635	-.683
170	331	-.250	.113	.107	-.618
170	332	-.309	.118	.065	-.710
170	333	-.246	.116	.133	-.660
170	334	-.204	.096	.128	-.564
170	335	-.160	.114	.212	-.583
170	336	-.179	.166	.459	-1.000
170	337	-.188	.209	.649	-.969
170	338	-.278	.103	.139	-.668
170	339	-.261	.113	.179	-.694
170	340	-.332	.118	.125	-.783
170	341	-.281	.115	.139	-.748
170	342	-.248	.099	.102	-.644
170	343	-.250	.154	.252	-.915
170	344	-.359	.189	.231	-1.026

APPENDIX A -- PRESSURE DATA: CONFIGURATION A: HOUSTON NATIONAL BANK

WD	TAP	CPMEAN	CPRMS	CPMAX	CPMIN
170	345	-.310	.109	.071	-.719
170	346	-.300	.100	.045	-.632
170	347	-.275	.111	.100	-.679
170	348	-.351	.118	.065	-.801
170	349	-.323	.118	.079	-.732
170	350	-.419	.125	.007	-.943
170	351	-.406	.132	.127	-.933
170	352	-.359	.099	-.020	-.698
170	353	-.333	.110	.047	-.809
170	354	-.341	.097	.017	-.785
170	355	-.298	.106	.054	-.781
170	356	-.264	.102	.111	-.647
170	357	-.249	.102	.116	-.609
170	358	-.278	.101	.094	-.621
170	359	-.229	.108	.153	-.600
170	360	-.231	.107	.149	-.587
170	361	-.227	.109	.151	-.631
170	362	-.265	.094	.061	-.600
170	401	.382	.194	1.131	-.363
170	402	.335	.185	.999	-.226
170	403	.140	.158	.843	-.380
170	404	-.097	.120	.324	-.510
170	405	-.117	.122	.341	-.537
170	406	.365	.198	1.105	-.311
170	407	.322	.181	.994	-.197
170	408	.131	.136	.634	-.307
170	409	-.058	.116	.361	-.487
170	410	-.140	.109	.256	-.545
170	411	.352	.223	1.134	-.645
170	412	.321	.188	1.305	-.298
170	413	.166	.157	1.077	-.253
170	414	-.047	.128	.467	-.455
170	415	-.153	.117	.274	-.554
170	416	.310	.195	.904	-.611
170	417	.258	.196	.974	-.436
170	418	.147	.141	.650	-.254
170	419	-.087	.117	.286	-.460
170	420	-.233	.107	.158	-.557
170	421	-.297	.110	.077	-.652
170	422	-.284	.128	.404	-.667
170	423	-.127	.172	.503	-.718
170	424	-.152	.147	.390	-.616
170	425	.329	.196	1.005	-.701
170	426	.223	.150	.812	-.460
170	427	.136	.142	.674	-.323
170	428	-.146	.111	.249	-.538
170	429	-.192	.116	.218	-.658
170	430	-.317	.116	.096	-.878
170	431	-.171	.186	.711	-.827
170	432	-.088	.121	.360	-.450

WD	TAP	CPMEAN	CPRMS	CPMAX	CPMIN
170	433	-.146	.117	.287	-.521
170	434	-.320	.155	.599	-.975
170	435	.010	.130	.859	-.422
170	436	-.179	.104	.166	-.562
170	437	-.223	.108	.176	-.604
170	438	.252	.187	1.128	-.615
170	439	.237	.170	1.013	-.406
170	440	.091	.131	.558	-.344
170	441	-.038	.121	.375	-.446
170	442	-.029	.121	.391	-.465
170	443	-.177	.113	.234	-.567
170	444	-.274	.107	.110	-.681
170	445	-.315	.116	.012	-.882
170	446	-.323	.119	.019	-1.016
170	447	-.325	.124	.023	-1.498
170	448	.131	.158	.684	-.502
170	449	.123	.140	.681	-.346
170	450	.034	.136	.499	-.429
170	451	-.060	.125	.391	-.537
170	452	-.181	.102	.143	-.575
170	453	-.253	.114	.121	-.702
170	454	-.296	.112	.061	-.702
170	455	-.316	.116	.079	-.762
170	456	-.356	.113	.298	-.931
170	457	-.320	.129	.414	-.930
170	458	-.324	.132	.069	-1.166
170	459	-.226	.124	.261	-.645
170	460	-.282	.112	.118	-.746
170	461	-.016	.147	.645	-.471
170	462	-.010	.137	.608	-.453
170	463	-.068	.120	.422	-.502
170	464	-.161	.096	.161	-.473
170	465	-.190	.105	.259	-.541
170	466	-.278	.109	.209	-.660
170	467	-.260	.107	.141	-.614
170	468	-.304	.102	.029	-.634
170	469	-.144	.134	.337	-.656
170	470	-.141	.130	.296	-.648
170	471	-.096	.121	.353	-.515
170	472	-.158	.099	.205	-.525
170	473	-.163	.111	.240	-.591
170	474	-.233	.115	.174	-.677
170	475	-.272	.114	.150	-.653
170	476	-.323	.102	.029	-.760
170	477	-.186	.111	.194	-.589
170	478	-.169	.115	.197	-.606
170	479	-.045	.118	.358	-.519
170	480	-.056	.107	.363	-.405
170	481	-.068	.121	.356	-.481
170	483	-.201	.115	.178	-.599

WD	TAP	CPMEAN	CPRMS	CPMAX	CPMIN
170	484	-.295	.094	.062	-.664
170	485	-.136	.110	.297	-.561
170	486	-.265	.106	.132	-.701
170	501	-.317	.103	-.019	-.686
170	502	-.311	.118	.042	-.721
170	503	-.416	.121	-.041	-.896
170	504	-.306	.130	.097	-.709
170	505	-.326	.102	-.005	-.738
170	506	-.288	.113	.085	-.753
170	507	-.317	.115	.042	-.739
170	508	-.302	.110	.043	-.755
170	509	-.269	.090	.055	-.607
170	510	-.319	.127	.109	-1.135
170	511	-.339	.117	.076	-.803
170	512	-.250	.105	.127	-.616
170	601	-.274	.110	.143	-.720
170	602	-.139	.109	.287	-.526
170	603	-.090	.111	.350	-.447
170	604	-.193	.140	.395	-.691
170	605	-.213	.113	.154	-.573
170	606	-.212	.097	.107	-.524
170	607	-.049	.121	.384	-.465
170	608	-.236	.116	.167	-.633
170	609	-.220	.111	.126	-.602
170	610	-.114	.100	.235	-.405
170	611	-.023	.123	.528	-.390
170	612	-.098	.132	.390	-.527
170	613	-.137	.109	.196	-.505
170	614	-.199	.107	.152	-.537
170	615	-.113	.117	.260	-.457
170	701	-.183	.113	.156	-.607
170	702	-.237	.112	.093	-.692
170	703	-.153	.104	.205	-.586
170	704	-.276	.129	.114	-.904
170	705	-.159	.106	.210	-.518
170	706	-.184	.084	.101	-.448
170	707	-.144	.105	.182	-.643
170	708	-.342	.113	.036	-.736
170	709	-.211	.100	.118	-.552
170	710	-.187	.085	.161	-.552
170	711	-.154	.098	.239	-.574
170	712	-.220	.114	.347	-.770
170	801	-.074	.113	.415	-.539
170	802	-.125	.113	.373	-.530
170	803	-.298	.118	.127	-.824
170	804	-.258	.120	.115	-.747
170	805	-.294	.103	.040	-.633
170	806	-.071	.134	.679	-.540
170	807	-.313	.111	.055	-.657
170	808	-.295	.114	.108	-.702

APPENDIX A -- PRESSURE DATA: CONFIGURATION A: HOUSTON NATIONAL BANK

WD	TAP	CPMEAN	CPRMS	CPMAX	CPMIN
170	809	-.087	.103	.289	-.418
170	810	-.202	.100	.185	-.554
170	811	-.371	.121	-.003	-.811
170	812	-.221	.099	.138	-.590
170	813	-.283	.106	.083	-.638
170	814	-.098	.116	.345	-.534
170	815	-.335	.116	.063	-.775
170	816	-.269	.112	.106	-.743
170	817	-.227	.078	.064	-.445
170	818	-.238	.108	.132	-.593
170	819	-.199	.121	.231	-.672
170	820	-.233	.103	.147	-.610
170	821	-.253	.095	.129	-.604
170	822	-.189	.102	.143	-.566
170	823	-.314	.111	.077	-.728
170	901	-.185	.140	.464	-.572
170	902	-.176	.106	.259	-.657
170	903	-.159	.096	.185	-.480
170	904	-.053	.117	.392	-.434
170	905	-.227	.133	.360	-.667
170	906	-.023	.133	.604	-.468
170	907	-.269	.107	.070	-.754
170	908	-.083	.123	.353	-.482
170	909	-.100	.131	.342	-.494
170	910	-.258	.117	.134	-.847
170	911	-.099	.102	.335	-.411
170	912	-.147	.112	.236	-.502
170	913	-.347	.122	.133	-.815
170	914	-.268	.116	.121	-.718
170	915	-.235	.120	.160	-.711
180	1	-.278	.118	.136	-.739
180	2	-.253	.096	.049	-.598
180	3	-.188	.106	.151	-.579
180	4	-.203	.109	.171	-.596
180	5	-.248	.108	.115	-.702
180	6	-.248	.106	.168	-.649
180	7	.044	.127	.497	-.325
180	8	.058	.133	.607	-.391
180	9	-.268	.100	.187	-.605
180	10	-.263	.099	.129	-.630
180	11	.072	.173	.712	-.540
180	12	.160	.192	.856	-.751
180	13	-.300	.121	.154	-.721
180	14	-.284	.106	.088	-.655
180	15	-.256	.118	.179	-.671
180	16	-.309	.120	.135	-.735
180	17	-.171	.150	.390	-.717
180	18	-.301	.116	.028	-.782
180	19	-.271	.128	.086	-.742
180	20	-.316	.128	.054	-.772

WD	TAP	CPMEAN	CPRMS	CPMAX	CPMIN
180	21	-.122	.120	.338	-.585
180	22	-.228	.115	.216	-.606
180	23	-.257	.119	.156	-.711
180	24	-.315	.122	.101	-.753
180	25	-.254	.116	.109	-.657
180	26	-.286	.100	.039	-.660
180	27	-.257	.111	.128	-.676
180	28	-.301	.115	.095	-.755
180	29	-.283	.123	.115	-.982
180	30	-.299	.098	.044	-.683
180	31	-.280	.112	.060	-.640
180	32	-.319	.111	.028	-.746
180	101	-.253	.103	.096	-.666
180	102	-.226	.115	.162	-.672
180	103	-.235	.113	.137	-.600
180	104	-.217	.112	.147	-.582
180	105	-.259	.101	.173	-.636
180	106	-.216	.114	.274	-.663
180	107	-.241	.113	.255	-.670
180	108	-.233	.110	.238	-.611
180	109	-.259	.104	.096	-.632
180	110	-.239	.115	.157	-.639
180	111	-.255	.115	.149	-.662
180	112	-.240	.115	.156	-.710
180	113	-.265	.093	.052	-.600
180	114	-.232	.103	.165	-.593
180	115	-.247	.106	.157	-.611
180	116	-.245	.112	.084	-.695
180	117	-.272	.100	.082	-.611
180	118	-.230	.110	.162	-.616
180	119	-.262	.116	.153	-.685
180	120	-.253	.115	.153	-.679
180	121	-.294	.102	.038	-.671
180	122	-.233	.115	.094	-.620
180	123	-.247	.112	.097	-.632
180	124	-.181	.106	.147	-.547
180	125	-.256	.094	.167	-.559
180	126	-.222	.104	.253	-.561
180	127	-.274	.120	.221	-.809
180	128	-.282	.122	.200	-.895
180	129	-.241	.094	.105	-.613
180	130	-.226	.104	.135	-.640
180	131	-.256	.107	.115	-.676
180	132	-.233	.103	.106	-.680
180	133	-.267	.103	.028	-.687
180	134	-.205	.108	.141	-.625
180	135	-.226	.111	.091	-.667
180	136	-.214	.108	.096	-.632
180	137	-.241	.096	.036	-.639
180	138	-.213	.107	.106	-.648

WD	TAP	CPMEAN	CPRMS	CPMAX	CPMIN
180	139	-.232	.109	.095	-.626
180	140	-.222	.106	.088	-.649
180	141	-.281	.103	.022	-.723
180	142	-.247	.121	.126	-.895
180	143	-.266	.124	.112	-.985
180	144	-.256	.120	.113	-.794
180	145	-.262	.096	.030	-.603
180	146	-.230	.108	.089	-.742
180	147	-.248	.110	.091	-.719
180	148	-.247	.115	.101	-.707
180	149	-.271	.081	.071	-.572
180	150	-.236	.104	.188	-.573
180	151	-.250	.104	.172	-.594
180	152	-.231	.102	.185	-.572
180	153	-.280	.098	.050	-.699
180	154	-.246	.112	.170	-.687
180	155	-.263	.104	.094	-.641
180	156	-.226	.106	.135	-.657
180	157	-.254	.093	.157	-.528
180	158	-.222	.104	.255	-.526
180	159	-.256	.109	.246	-.629
180	160	-.238	.109	.253	-.614
180	161	-.266	.108	.035	-.954
180	162	-.230	.109	.091	-.660
180	163	-.254	.112	.059	-.620
180	164	-.210	.104	.100	-.576
180	165	-.250	.104	.143	-.569
180	166	-.227	.124	.180	-.667
180	167	-.230	.117	.147	-.614
180	168	-.213	.115	.159	-.563
180	169	-.264	.099	.041	-.696
180	170	-.239	.109	.118	-.698
180	171	-.261	.111	.107	-.716
180	172	-.252	.109	.112	-.717
180	173	-.293	.098	.024	-.639
180	174	-.275	.118	.077	-.669
180	175	-.296	.120	.051	-.765
180	176	-.293	.122	.032	-.792
180	177	-.311	.110	.080	-.771
180	178	-.283	.115	.146	-.709
180	179	-.325	.125	.127	-.953
180	180	-.301	.122	.130	-.874
180	181	-.302	.129	.037	-1.388
180	182	-.333	.113	.063	-.802
180	183	-.302	.123	.077	-1.064
180	184	-.272	.118	.083	-.880
180	185	-.238	.093	.127	-.583
180	186	-.224	.104	.184	-.613
180	187	-.261	.106	.166	-.673
180	188	-.228	.102	.176	-.602

APPENDIX A -- PRESSURE DATA: CONFIGURATION A: HOUSTON NATIONAL BANK

WD	TAP	CPMEAN	CPRMS	CPMAX	CPMIN
180	189	-.237	.094	.083	-.545
180	190	-.212	.107	.145	-.562
180	191	-.245	.104	.121	-.581
180	201	-.257	.125	.129	-.955
180	202	-.243	.101	.101	-.536
180	203	-.221	.115	.206	-.603
180	204	-.256	.116	.139	-.671
180	205	-.227	.114	.176	-.619
180	206	-.255	.101	.043	-.807
180	207	-.238	.111	.106	-.696
180	208	-.270	.113	.081	-.708
180	209	-.238	.111	.122	-.613
180	210	-.250	.096	.017	-.562
180	211	-.259	.117	.140	-.817
180	212	-.292	.115	.118	-.867
180	213	-.252	.109	.129	-.629
180	214	-.247	.097	.080	-.557
180	215	-.224	.108	.124	-.580
180	216	-.306	.119	.089	-.704
180	217	-.276	.116	.101	-.663
180	218	-.308	.102	.012	-.651
180	219	-.277	.115	.095	-.672
180	220	-.312	.116	.040	-.714
180	221	-.283	.113	.054	-.688
180	222	-.268	.098	.094	-.622
180	223	-.229	.109	.187	-.694
180	224	-.256	.111	.162	-.713
180	225	-.268	.113	.205	-.648
180	226	-.280	.099	.135	-.643
180	227	-.244	.107	.208	-.648
180	228	-.253	.110	.153	-.698
180	229	-.253	.111	.122	-.787
180	230	-.252	.098	.058	-.649
180	231	-.220	.113	.133	-.604
180	232	-.248	.115	.101	-.677
180	233	-.220	.113	.126	-.601
180	234	-.276	.103	.104	-.735
180	235	-.251	.113	.161	-.709
180	236	-.278	.110	.135	-.713
180	237	-.231	.106	.155	-.623
180	238	-.270	.103	.048	-.688
180	239	-.247	.114	.121	-.703
180	240	-.278	.113	.089	-.717
180	241	-.239	.109	.105	-.705
180	242	-.243	.099	.101	-.573
180	243	-.241	.108	.123	-.713
180	244	-.248	.115	.157	-.631
180	245	-.337	.121	.074	-.925
180	246	-.283	.087	.003	-.752
180	247	-.259	.101	.064	-.636
180	248	-.276	.109	.078	-.683
180	249	-.244	.108	.081	-.642
180	250	-.228	.113	.128	-.596
180	251	-.237	.112	.095	-.570
180	252	-.268	.115	.083	-.612
180	253	-.232	.111	.100	-.592
180	254	-.249	.099	.080	-.571
180	255	-.221	.111	.140	-.586
180	256	-.250	.114	.110	-.678
180	257	-.219	.113	.133	-.643
180	258	-.247	.094	.054	-.583
180	259	-.220	.104	.133	-.585
180	260	-.246	.110	.132	-.659
180	261	-.242	.108	.122	-.635
180	262	-.255	.090	.046	-.585
180	263	-.233	.098	.082	-.621
180	264	-.307	.103	.018	-.703
180	265	-.259	.099	.055	-.623
180	266	-.229	.096	.121	-.585
180	267	-.208	.110	.162	-.604
180	268	-.278	.116	.100	-.725
180	269	-.280	.112	.094	-.744
180	270	-.241	.098	.048	-.552
180	271	-.220	.106	.126	-.583
180	272	-.321	.107	.023	-.666
180	273	-.305	.118	.079	-.846
180	274	-.280	.108	.096	-.764
180	275	-.253	.118	.160	-.716
180	276	-.326	.126	.120	-.793
180	277	-.260	.106	.159	-.613
180	278	-.255	.096	.060	-.583
180	279	-.259	.111	.099	-.636
180	280	-.212	.118	.219	-.641
180	281	-.242	.110	.161	-.672
180	282	-.217	.095	.139	-.582
180	283	-.214	.105	.135	-.613
180	284	-.297	.112	.057	-.719
180	285	-.258	.108	.088	-.651
180	286	-.256	.101	.113	-.639
180	287	-.245	.117	.171	-.649
180	288	-.320	.122	.116	-.754
180	301	.305	.211	.975	-.362
180	302	.072	.128	.724	-.291
180	303	.237	.163	1.095	-.216
180	304	-.078	.135	.554	-.504
180	305	.376	.193	1.270	-.268
180	306	-.124	.102	.240	-.440
180	307	.164	.162	.785	-.294
180	308	.312	.227	1.150	-.336
180	309	-.211	.138	.316	-.730
180	310	-.172	.096	.170	-.480
180	311	-.101	.113	.300	-.476
180	312	-.005	.135	.520	-.513
180	313	.133	.147	.716	-.411
180	314	.242	.156	.787	-.238
180	315	.349	.193	1.127	-.244
180	316	.333	.219	1.166	-.339
180	317	-.214	.117	.177	-.673
180	318	-.123	.111	.261	-.461
180	319	-.010	.136	.433	-.427
180	320	.007	.156	.536	-.465
180	321	.119	.165	.719	-.362
180	322	.208	.194	.858	-.538
180	323	.210	.181	.958	-.493
180	324	-.273	.114	.174	-.734
180	325	-.194	.110	.254	-.640
180	326	-.125	.110	.316	-.583
180	327	-.079	.128	.477	-.603
180	328	-.092	.141	.505	-.614
180	329	.007	.186	.619	-.855
180	330	-.002	.194	.562	-.744
180	331	-.209	.105	.111	-.571
180	332	-.281	.110	.071	-.677
180	333	-.231	.108	.168	-.589
180	334	-.183	.096	.164	-.556
180	335	-.150	.112	.245	-.580
180	336	-.184	.163	.298	-1.045
180	337	-.184	.204	.421	-1.112
180	338	-.223	.099	.186	-.571
180	339	-.214	.109	.234	-.627
180	340	-.290	.117	.176	-.762
180	341	-.241	.111	.201	-.708
180	342	-.210	.098	.104	-.577
180	343	-.184	.132	.236	-.765
180	344	-.273	.165	.238	-.994
180	345	-.283	.108	.085	-.687
180	346	-.246	.098	.046	-.556
180	347	-.240	.109	.078	-.588
180	348	-.326	.117	.020	-.722
180	349	-.292	.113	.063	-.658
180	350	-.276	.105	.065	-.673
180	351	-.346	.124	.036	-.854
180	352	-.313	.100	.065	-.655
180	353	-.285	.107	.051	-.681
180	354	-.210	.097	.088	-.572
180	355	-.249	.110	.110	-.634
180	356	-.247	.106	.134	-.614
180	357	-.215	.107	.158	-.599
180	358	-.162	.090	.172	-.475
180	359	-.190	.104	.195	-.518

APPENDIX A -- PRESSURE DATA: CONFIGURATION A; HOUSTON NATIONAL BANK

WD	TAP	CPMEAN	CPRMS	CPMAX	CPMIN
180	360	-.213	.104	.169	-.538
180	361	-.194	.104	.170	-.529
180	362	-.165	.094	.180	-.483
180	401	.378	.217	1.234	-.728
180	402	.306	.190	1.072	-.502
180	403	.127	.150	.724	-.370
180	404	-.046	.108	.329	-.388
180	405	-.114	.118	.285	-.497
180	406	.286	.212	.830	-.735
180	407	.267	.176	.743	-.549
180	408	.116	.121	.579	-.280
180	409	-.075	.120	.372	-.508
180	410	-.160	.119	.322	-.599
180	411	.261	.220	1.074	-.672
180	412	.296	.150	.749	-.301
180	413	.133	.133	.662	-.298
180	414	-.053	.122	.339	-.489
180	415	-.147	.114	.269	-.624
180	416	.247	.205	.840	-.857
180	417	.203	.186	.836	-.470
180	418	.088	.140	.581	-.389
180	419	-.109	.118	.285	-.501
180	420	-.169	.103	.208	-.469
180	421	-.258	.115	.171	-.623
180	422	-.286	.121	.173	-.756
180	423	-.142	.155	.548	-.607
180	424	-.161	.142	.529	-.632
180	425	.285	.215	1.006	-.731
180	426	.265	.165	.826	-.503
180	427	.124	.145	.667	-.349
180	428	-.091	.098	.230	-.408
180	429	-.170	.111	.208	-.582
180	430	-.303	.120	.088	-.738
180	431	-.186	.159	.417	-.697
180	432	-.045	.115	.335	-.445
180	433	-.116	.116	.278	-.548
180	434	-.335	.142	.079	-.909
180	435	.022	.130	.483	-.452
180	436	-.122	.099	.264	-.503
180	437	-.185	.112	.203	-.612
180	438	.187	.189	.874	-.690
180	439	.196	.164	.821	-.352
180	440	.094	.122	.547	-.319
180	441	-.032	.121	.376	-.403
180	442	-.043	.122	.365	-.487
180	443	-.151	.118	.255	-.666
180	444	-.193	.095	.142	-.575
180	445	-.252	.114	.134	-.689
180	446	-.287	.118	.107	-.841
180	447	-.269	.120	.126	-.992
180	448	.121	.140	.781	-.323
180	449	.129	.156	.903	-.351
180	450	.021	.134	.562	-.392
180	451	-.045	.123	.438	-.465
180	452	-.145	.098	.221	-.489
180	453	-.220	.118	.238	-.629
180	454	-.283	.118	.176	-.704
180	455	-.277	.124	.225	-.836
180	456	-.285	.108	.168	-.751
180	457	-.271	.132	.286	-.908
180	458	-.294	.127	.218	-.787
180	459	-.214	.128	.324	-.672
180	460	-.246	.112	.144	-.617
180	461	.013	.145	.571	-.438
180	462	-.015	.136	.522	-.428
180	463	-.069	.120	.416	-.435
180	464	-.127	.093	.218	-.464
180	465	-.164	.105	.201	-.528
180	466	-.253	.110	.132	-.616
180	467	-.229	.108	.151	-.585
180	468	-.249	.099	.094	-.641
180	469	-.137	.128	.323	-.586
180	470	-.166	.122	.258	-.563
180	471	-.107	.111	.240	-.469
180	472	-.121	.098	.191	-.462
180	473	-.132	.111	.240	-.544
180	474	-.211	.114	.162	-.633
180	475	-.229	.110	.146	-.617
180	476	-.251	.102	.102	-.611
180	477	-.161	.114	.256	-.624
180	478	-.142	.120	.249	-.616
180	479	-.009	.128	.469	-.495
180	480	-.010	.110	.400	-.378
180	481	-.033	.122	.423	-.418
180	483	-.162	.115	.244	-.593
180	484	-.229	.101	.151	-.594
180	485	-.107	.115	.428	-.539
180	486	-.251	.116	.188	-.759
180	501	-.300	.100	.065	-.657
180	502	-.296	.111	.123	-.782
180	503	-.412	.115	.029	-.833
180	504	-.317	.116	.110	-.713
180	505	-.312	.101	-.006	-.719
180	506	-.299	.111	.078	-.682
180	507	-.363	.120	.034	-.778
180	508	-.267	.112	.078	-.717
180	509	-.224	.087	.095	-.509
180	510	-.288	.105	.067	-.662
180	511	-.383	.115	.007	-.823
180	512	-.214	.103	.172	-.550
180	601	-.272	.114	.131	-.679
180	602	-.102	.098	.267	-.407
180	603	-.064	.105	.327	-.410
180	604	-.173	.124	.326	-.601
180	605	-.221	.114	.244	-.628
180	606	-.210	.094	.089	-.504
180	607	-.031	.122	.434	-.438
180	608	-.246	.114	.133	-.637
180	609	-.224	.108	.104	-.563
180	610	-.095	.100	.301	-.446
180	611	-.016	.123	.559	-.438
180	612	-.127	.137	.485	-.575
180	613	-.137	.109	.269	-.503
180	614	-.146	.114	.333	-.558
180	615	-.111	.116	.318	-.514
180	701	-.196	.112	.177	-.669
180	702	-.229	.114	.153	-.752
180	703	-.156	.104	.164	-.503
180	704	-.330	.141	.117	-1.045
180	705	-.156	.107	.187	-.631
180	706	-.166	.089	.123	-.492
180	707	-.148	.120	.204	-.745
180	708	-.317	.112	.029	-.700
180	709	-.177	.103	.150	-.514
180	710	-.152	.091	.204	-.467
180	711	-.109	.103	.308	-.441
180	712	-.216	.130	.250	-.817
180	801	-.099	.122	.429	-.623
180	802	-.103	.122	.363	-.501
180	803	-.306	.130	.101	-.771
180	804	-.262	.126	.137	-.790
180	805	-.284	.100	.049	-.678
180	806	-.057	.151	.644	-.620
180	807	-.301	.118	.170	-.718
180	808	-.284	.111	.113	-.717
180	809	-.052	.115	.521	-.386
180	810	-.164	.104	.252	-.544
180	811	-.385	.115	-.003	-.839
180	812	-.212	.096	.080	-.556
180	813	-.262	.091	.014	-.593
180	814	-.057	.114	.366	-.503
180	815	-.337	.121	.047	-.907
180	816	-.251	.106	.107	-.696
180	817	-.203	.080	.068	-.457
180	818	-.232	.105	.115	-.568
180	819	-.121	.167	.772	-.606
180	820	-.147	.118	.265	-.560
180	821	-.227	.095	.115	-.660
180	822	-.158	.096	.191	-.540
180	823	-.337	.109	.034	-.748

APPENDIX A -- PRESSURE DATA: CONFIGURATION A; HOUSTON NATIONAL BANK

WD	TAP	CPMEAN	CPRMS	CPMAX	CPMIN
180	901	-.131	.173	.595	-.729
180	902	-.163	.112	.197	-.569
180	903	-.133	.093	.185	-.493
180	904	-.047	.119	.355	-.449
180	905	-.182	.157	.558	-.711
180	906	-.007	.134	.496	-.473
180	907	-.241	.110	.104	-.660
180	908	-.062	.119	.372	-.429
180	909	-.116	.130	.409	-.526
180	910	-.259	.117	.121	-.714
180	911	-.068	.101	.278	-.427
180	912	-.111	.110	.252	-.560
180	913	-.351	.115	.047	-.771
180	914	-.245	.108	.156	-.631
180	915	-.249	.111	.127	-.612
190	1	-.247	.131	.107	-.886
190	2	-.249	.115	.078	-.811
190	3	-.179	.115	.185	-.638
190	4	-.209	.117	.194	-.600
190	5	-.232	.119	.192	-.688
190	6	-.247	.112	.078	-.607
190	7	.014	.130	.456	-.643
190	8	.003	.133	.465	-.407
190	9	-.237	.104	.100	-.696
190	10	-.252	.117	.147	-.766
190	11	.025	.198	.750	-.829
190	12	.076	.194	.797	-.668
190	13	-.274	.131	.177	-.712
190	14	-.262	.106	.087	-.619
190	15	-.224	.116	.168	-.617
190	16	-.284	.118	.093	-.700
190	17	-.173	.140	.411	-.746
190	18	-.269	.110	.059	-.716
190	19	-.240	.118	.141	-.762
190	20	-.293	.121	.093	-.793
190	21	-.115	.114	.237	-.591
190	22	-.232	.116	.178	-.808
190	23	-.244	.126	.178	-.820
190	24	-.309	.129	.139	-.802
190	25	-.221	.121	.198	-.704
190	26	-.218	.102	.080	-.576
190	27	-.198	.113	.134	-.584
190	28	-.252	.118	.094	-.698
190	29	-.227	.128	.161	-.704
190	30	-.227	.107	.128	-.654
190	31	-.223	.111	.107	-.695
190	32	-.263	.118	.154	-.715
190	101	-.237	.114	.165	-.636
190	102	-.199	.126	.248	-.639
190	103	-.208	.121	.210	-.605
190	104	-.185	.122	.236	-.645
190	105	-.239	.101	.084	-.559
190	106	-.183	.113	.198	-.555
190	107	-.218	.112	.156	-.590
190	108	-.202	.109	.167	-.560
190	109	-.256	.110	.110	-.607
190	110	-.231	.120	.138	-.597
190	111	-.252	.121	.124	-.619
190	112	-.232	.118	.152	-.593
190	113	-.249	.106	.075	-.606
190	114	-.199	.116	.164	-.587
190	115	-.217	.119	.166	-.616
190	116	-.224	.128	.150	-.930
190	117	-.269	.106	.071	-.751
190	118	-.211	.113	.162	-.601
190	119	-.249	.120	.122	-.660
190	120	-.234	.119	.138	-.647
190	121	-.281	.114	.062	-.669
190	122	-.198	.125	.155	-.710
190	123	-.222	.119	.154	-.649
190	124	-.156	.115	.182	-.564
190	125	-.234	.104	.105	-.622
190	126	-.188	.114	.184	-.629
190	127	-.251	.132	.192	-.712
190	128	-.246	.134	.199	-.731
190	129	-.221	.101	.109	-.562
190	130	-.189	.112	.169	-.567
190	131	-.225	.116	.107	-.625
190	132	-.209	.111	.132	-.590
190	133	-.242	.099	.107	-.576
190	134	-.166	.111	.190	-.563
190	135	-.188	.112	.188	-.593
190	136	-.170	.110	.193	-.572
190	137	-.216	.099	.175	-.510
190	138	-.178	.110	.243	-.533
190	139	-.198	.112	.225	-.567
190	140	-.186	.109	.218	-.517
190	141	-.231	.105	.144	-.588
190	142	-.181	.116	.201	-.587
190	143	-.201	.118	.194	-.621
190	144	-.189	.116	.206	-.630
190	145	-.221	.098	.114	-.526
190	146	-.175	.108	.194	-.513
190	147	-.195	.111	.182	-.549
190	148	-.187	.111	.184	-.541
190	149	-.236	.094	.058	-.615
190	150	-.186	.115	.186	-.699
190	151	-.222	.120	.177	-.669
190	152	-.201	.118	.185	-.639
190	153	-.230	.103	.133	-.534
190	154	-.179	.113	.203	-.539
190	155	-.194	.106	.188	-.519
190	156	-.169	.109	.200	-.499
190	157	-.212	.098	.109	-.523
190	158	-.172	.108	.189	-.513
190	159	-.219	.115	.125	-.611
190	160	-.198	.113	.141	-.621
190	161	-.224	.107	.183	-.654
190	162	-.177	.111	.260	-.519
190	163	-.202	.115	.260	-.610
190	164	-.176	.112	.247	-.508
190	165	-.216	.100	.084	-.534
190	166	-.178	.116	.172	-.621
190	167	-.188	.115	.166	-.598
190	168	-.169	.112	.191	-.569
190	169	-.219	.101	.097	-.568
190	170	-.180	.110	.178	-.570
190	171	-.203	.111	.154	-.590
190	172	-.186	.110	.153	-.552
190	173	-.222	.099	.122	-.559
190	174	-.183	.107	.186	-.606
190	175	-.206	.109	.172	-.555
190	176	-.192	.108	.179	-.540
190	177	-.205	.101	.132	-.531
190	178	-.197	.112	.192	-.565
190	179	-.232	.118	.175	-.601
190	180	-.212	.116	.193	-.549
190	181	-.212	.112	.182	-.690
190	182	-.216	.100	.114	-.625
190	183	-.233	.128	.216	-.769
190	184	-.208	.125	.228	-.747
190	185	-.184	.099	.130	-.523
190	186	-.178	.112	.174	-.542
190	187	-.209	.113	.161	-.590
190	188	-.185	.112	.185	-.561
190	189	-.185	.097	.166	-.643
190	190	-.177	.113	.225	-.684
190	191	-.208	.110	.188	-.707
190	201	-.235	.163	.301	-1.183
190	202	-.239	.122	.351	-.848
190	203	-.231	.151	.311	-.967
190	204	-.269	.148	.188	-.967
190	205	-.238	.141	.232	-.890
190	206	-.222	.112	.183	-.754
190	207	-.210	.122	.248	-.684
190	208	-.238	.122	.202	-.686
190	209	-.213	.119	.152	-.703
190	210	-.223	.111	.150	-.796
190	211	-.230	.127	.146	-.715
190	212	-.258	.123	.118	-.684

APPENDIX A -- PRESSURE DATA: CONFIGURATION A; HOUSTON NATIONAL BANK

WD	TAP	CPMEAN	CPRMS	CPMAX	CPMIN
190	213	-.223	.121	.193	-.665
190	214	-.228	.107	.144	-.627
190	215	-.214	.120	.213	-.647
190	216	-.305	.133	.109	-.929
190	217	-.277	.129	.128	-.887
190	218	-.282	.106	.070	-.661
190	219	-.257	.120	.141	-.658
190	220	-.275	.117	.111	-.651
190	221	-.248	.115	.126	-.625
190	222	-.237	.103	.070	-.610
190	223	-.209	.114	.134	-.614
190	224	-.233	.115	.112	-.645
190	225	-.253	.119	.083	-.733
190	226	-.255	.106	.077	-.619
190	227	-.229	.115	.126	-.571
190	228	-.224	.116	.146	-.611
190	229	-.225	.116	.139	-.650
190	230	-.230	.099	.097	-.589
190	231	-.213	.117	.171	-.648
190	232	-.240	.118	.150	-.660
190	233	-.214	.116	.173	-.622
190	234	-.265	.108	.097	-.733
190	235	-.247	.119	.162	-.761
190	236	-.264	.118	.161	-.774
190	237	-.205	.112	.218	-.664
190	238	-.258	.093	.070	-.580
190	239	-.240	.105	.101	-.580
190	240	-.262	.105	.045	-.624
190	241	-.218	.103	.084	-.569
190	242	-.206	.100	.103	-.523
190	243	-.197	.114	.208	-.660
190	244	-.220	.119	.152	-.604
190	245	-.274	.126	.182	-1.035
190	246	-.214	.091	.080	-.784
190	247	-.206	.105	.075	-.551
190	248	-.224	.111	.134	-.677
190	249	-.200	.109	.160	-.647
190	250	-.181	.108	.147	-.639
190	251	-.240	.122	.270	-.653
190	252	-.265	.122	.235	-.684
190	253	-.227	.115	.252	-.658
190	254	-.228	.098	.072	-.605
190	255	-.207	.113	.162	-.639
190	256	-.233	.118	.146	-.655
190	257	-.206	.118	.170	-.634
190	258	-.204	.094	.096	-.534
190	259	-.190	.107	.145	-.559
190	260	-.210	.111	.150	-.601
190	261	-.206	.109	.160	-.570
190	262	-.201	.096	.115	-.549
190	263	-.200	.105	.150	-.579
190	264	-.280	.112	.073	-.669
190	265	-.230	.108	.122	-.625
190	266	-.197	.092	.118	-.529
190	267	-.183	.108	.182	-.579
190	268	-.257	.114	.128	-.854
190	269	-.223	.110	.150	-.610
190	270	-.193	.094	.118	-.526
190	271	-.190	.107	.163	-.588
190	272	-.283	.108	.076	-.686
190	273	-.258	.111	.098	-.656
190	274	-.241	.099	.133	-.582
190	275	-.221	.111	.214	-.595
190	276	-.295	.119	.166	-.820
190	277	-.232	.107	.171	-.593
190	278	-.223	.093	.083	-.534
190	279	-.246	.108	.080	-.609
190	280	-.175	.111	.239	-.629
190	281	-.208	.110	.175	-.602
190	282	-.187	.096	.155	-.505
190	283	-.196	.108	.157	-.572
190	284	-.286	.116	.096	-.675
190	285	-.247	.112	.090	-.592
190	286	-.238	.095	.065	-.638
190	287	-.229	.110	.120	-.799
190	288	-.307	.115	.062	-.883
190	301	.338	.245	1.324	-.422
190	302	.081	.136	.571	-.396
190	303	.220	.172	.944	-.363
190	304	-.070	.143	.460	-.565
190	305	.327	.202	1.279	-.221
190	306	-.100	.107	.262	-.458
190	307	.182	.157	.747	-.369
190	308	.303	.213	1.309	-.550
190	309	-.189	.136	.275	-.674
190	310	-.151	.100	.253	-.459
190	311	-.086	.120	.414	-.454
190	312	-.003	.146	.603	-.498
190	313	.138	.159	.796	-.313
190	314	.233	.132	.772	-.155
190	315	.326	.169	.869	-.244
190	316	.294	.194	.918	-.469
190	317	-.185	.113	.205	-.596
190	318	-.116	.097	.299	-.423
190	319	-.013	.118	.538	-.378
190	320	-.003	.136	.671	-.413
190	321	.112	.145	.731	-.312
190	322	.208	.163	.880	-.369
190	323	.189	.158	.744	-.608
190	324	-.259	.114	.134	-.620
190	325	-.181	.110	.190	-.529
190	326	-.105	.104	.241	-.485
190	327	-.062	.123	.377	-.482
190	328	-.085	.137	.411	-.521
190	329	.022	.161	.600	-.775
190	330	.044	.171	.611	-.775
190	331	-.179	.107	.216	-.545
190	332	-.260	.112	.134	-.634
190	333	-.216	.109	.147	-.570
190	334	-.180	.091	.111	-.481
190	335	-.155	.105	.176	-.490
190	336	-.198	.130	.222	-1.185
190	337	-.170	.157	.269	-1.203
190	338	-.198	.100	.186	-.578
190	339	-.191	.111	.249	-.597
190	340	-.281	.118	.200	-.697
190	341	-.229	.113	.221	-.634
190	342	-.193	.099	.136	-.550
190	343	-.178	.125	.203	-.691
190	344	-.284	.152	.179	-.885
190	345	-.237	.107	.144	-.693
190	346	-.219	.096	.118	-.569
190	347	-.208	.110	.172	-.603
190	348	-.294	.118	.122	-.721
190	349	-.251	.114	.150	-.669
190	350	-.307	.109	.053	-.709
190	351	-.295	.118	.095	-.746
190	352	-.250	.099	.086	-.587
190	353	-.243	.109	.136	-.653
190	354	-.248	.101	.080	-.588
190	355	-.213	.108	.148	-.600
190	356	-.221	.108	.118	-.581
190	357	-.187	.108	.162	-.549
190	358	-.210	.097	.132	-.595
190	359	-.166	.106	.184	-.603
190	360	-.194	.107	.166	-.624
190	361	-.178	.108	.157	-.596
190	362	-.220	.099	.159	-.583
190	401	.244	.242	.912	-1.923
190	402	.203	.182	.759	-.694
190	403	.066	.133	.479	-.537
190	404	-.131	.113	.255	-.503
190	405	-.130	.121	.297	-.563
190	406	.148	.253	.920	-1.248
190	407	.178	.190	.795	-.761
190	408	.024	.119	.393	-.333
190	409	-.085	.110	.263	-.456
190	410	-.156	.111	.204	-.534
190	411	.113	.273	.828	-.890
190	412	.133	.190	.737	-.815

APPENDIX A -- PRESSURE DATA: CONFIGURATION A; HOUSTON NATIONAL BANK

WD	TAP	CPMEAN	CPRMS	CPMAX	CPMIN
190	413	.066	.134	.601	-.355
190	414	-.074	.112	.268	-.483
190	415	-.164	.114	.258	-.590
190	416	.041	.260	.743	-1.698
190	417	.064	.201	.669	-.890
190	418	.028	.139	.534	-.483
190	419	-.119	.119	.367	-.537
190	420	-.244	.105	.113	-.641
190	421	-.250	.115	.116	-.689
190	422	-.283	.122	.111	-.783
190	423	-.158	.138	.400	-.645
190	424	-.172	.130	.292	-.619
190	425	.091	.267	.803	-1.183
190	426	.096	.174	.771	-.629
190	427	.042	.143	.664	-.399
190	428	-.174	.104	.180	-.512
190	429	-.183	.113	.187	-.557
190	430	-.295	.125	.120	-.706
190	431	-.188	.147	.553	-.697
190	432	-.107	.123	.478	-.509
190	433	-.114	.116	.339	-.482
190	434	-.312	.148	.207	-.935
190	435	.012	.132	.605	-.412
190	436	-.157	.104	.185	-.526
190	437	-.159	.109	.174	-.579
190	438	.077	.215	.813	-.846
190	439	.113	.172	.731	-.722
190	440	-.019	.118	.455	-.396
190	441	-.059	.113	.424	-.427
190	442	-.068	.119	.382	-.540
190	443	-.139	.111	.305	-.477
190	444	-.232	.112	.148	-.687
190	445	-.222	.117	.181	-.754
190	446	-.262	.123	.169	-.808
190	447	-.237	.123	.189	-.768
190	448	-.020	.132	.558	-.868
190	449	.021	.133	.775	-.458
190	450	-.047	.127	.497	-.497
190	451	-.074	.121	.507	-.509
190	452	-.192	.101	.274	-.599
190	453	-.193	.112	.200	-.682
190	454	-.245	.108	.120	-.727
190	455	-.226	.109	.142	-.725
190	456	-.283	.110	.069	-.693
190	457	-.223	.127	.188	-.672
190	458	-.254	.124	.183	-.771
190	459	-.176	.121	.335	-.659
190	460	-.239	.104	.182	-.634
190	461	-.019	.132	.518	-.493
190	462	-.046	.124	.412	-.507
190	463	-.076	.109	.295	-.486
190	464	-.130	.097	.159	-.471
190	465	-.156	.110	.237	-.550
190	466	-.240	.117	.148	-.638
190	467	-.196	.117	.210	-.630
190	468	-.213	.101	.136	-.660
190	469	-.134	.124	.333	-.551
190	470	-.170	.123	.280	-.597
190	471	-.097	.115	.320	-.499
190	472	-.108	.099	.184	-.429
190	473	-.118	.113	.213	-.491
190	474	-.195	.119	.211	-.597
190	475	-.175	.115	.170	-.546
190	476	-.189	.094	.119	-.541
190	477	-.135	.112	.225	-.521
190	478	-.145	.114	.258	-.631
190	479	-.015	.116	.395	-.494
190	480	-.024	.104	.395	-.374
190	481	-.042	.116	.375	-.432
190	483	-.132	.112	.252	-.557
190	484	-.179	.095	.169	-.524
190	485	-.108	.114	.299	-.486
190	486	-.221	.113	.188	-.651
190	501	-.218	.104	.087	-.597
190	502	-.214	.116	.134	-.620
190	503	-.348	.124	.047	-.778
190	504	-.237	.119	.153	-.659
190	505	-.228	.101	.154	-.561
190	506	-.229	.112	.165	-.592
190	507	-.357	.124	.101	-.752
190	508	-.216	.112	.149	-.591
190	509	-.175	.092	.130	-.468
190	510	-.207	.109	.170	-.573
190	511	-.350	.122	.061	-.783
190	512	-.190	.110	.173	-.562
190	601	-.206	.113	.153	-.596
190	602	-.090	.096	.264	-.420
190	603	-.070	.104	.316	-.462
190	604	-.193	.122	.224	-.626
190	605	-.217	.112	.151	-.608
190	606	-.165	.093	.120	-.490
190	607	-.031	.113	.391	-.414
190	608	-.272	.115	.192	-.644
190	609	-.193	.108	.170	-.558
190	610	-.065	.093	.309	-.388
190	611	-.001	.113	.513	-.436
190	612	-.131	.127	.385	-.604
190	613	-.129	.105	.318	-.484
190	614	-.076	.125	.304	-.525
190	615	-.109	.126	.362	-.592
190	701	-.184	.117	.225	-.603
190	702	-.182	.100	.194	-.610
190	703	-.158	.099	.164	-.487
190	704	-.340	.135	.098	-1.032
190	705	-.162	.103	.174	-.515
190	706	-.150	.091	.141	-.551
190	707	-.144	.119	.211	-.858
190	708	-.315	.115	.027	-.794
190	709	-.162	.106	.199	-.583
190	710	-.140	.094	.195	-.489
190	711	-.099	.107	.284	-.511
190	712	-.269	.172	.299	-1.144
190	801	-.122	.107	.297	-.521
190	802	-.111	.120	.495	-.489
190	803	-.333	.132	.262	-.820
190	804	-.259	.123	.224	-.754
190	805	-.219	.103	.120	-.557
190	806	-.134	.128	.380	-.509
190	807	-.314	.123	.083	-.762
190	808	-.224	.115	.146	-.620
190	809	-.087	.124	.436	-.450
190	810	-.140	.111	.226	-.526
190	811	-.388	.127	.041	-1.012
190	812	-.194	.107	.190	-.549
190	813	-.207	.098	.123	-.562
190	814	-.069	.137	.596	-.587
190	815	-.319	.133	.143	-1.138
190	816	-.226	.114	.187	-.630
190	817	-.167	.085	.096	-.417
190	818	-.177	.107	.184	-.537
190	819	.006	.187	.739	-.693
190	820	-.080	.120	.300	-.537
190	821	-.208	.100	.195	-.561
190	822	-.127	.101	.264	-.481
190	823	-.313	.116	.074	-.721
190	901	-.214	.181	.574	-.857
190	902	-.167	.130	.292	-.685
190	903	-.126	.094	.182	-.476
190	904	-.044	.117	.414	-.404
190	905	-.221	.159	.433	-.762
190	906	-.023	.121	.436	-.469
190	907	-.201	.110	.187	-.684
190	908	-.047	.117	.459	-.456
190	909	-.130	.127	.301	-.574
190	910	-.239	.113	.173	-.715
190	911	-.055	.106	.294	-.426
190	912	-.088	.115	.300	-.486
190	913	-.341	.125	.106	-.780
190	914	-.204	.116	.205	-.636
190	915	-.188	.110	.195	-.567

APPENDIX A -- PRESSURE DATA: CONFIGURATION A; HOUSTON NATIONAL BANK

WD	TAP	CPMEAN	CPRMS	CPMAX	CPMIN
200	1	-.248	.135	.181	-.927
200	2	-.233	.120	.141	-.744
200	3	-.175	.120	.237	-.639
200	4	-.220	.121	.144	-.725
200	5	-.225	.122	.178	-.655
200	6	-.238	.126	.113	-.792
200	7	-.026	.134	.427	-.524
200	8	-.059	.135	.385	-.544
200	9	-.245	.112	.109	-.626
200	10	-.241	.127	.101	-.946
200	11	-.055	.201	.727	-.985
200	12	.008	.204	.856	-.773
200	13	-.254	.129	.191	-.764
200	14	-.238	.106	.079	-.621
200	15	-.207	.115	.175	-.625
200	16	-.284	.118	.096	-.711
200	17	-.176	.133	.254	-.791
200	18	-.260	.110	.089	-.660
200	19	-.233	.112	.087	-.624
200	20	-.302	.115	.052	-.694
200	21	-.125	.110	.244	-.514
200	22	-.217	.111	.205	-.675
200	23	-.215	.112	.213	-.577
200	24	-.299	.117	.141	-.727
200	25	-.192	.110	.233	-.572
200	26	-.191	.099	.135	-.570
200	27	-.179	.109	.252	-.555
200	28	-.254	.114	.225	-.635
200	29	-.206	.123	.318	-.813
200	30	-.199	.097	.146	-.666
200	31	-.202	.112	.153	-.661
200	32	-.252	.108	.108	-.603
200	101	-.255	.121	.120	-.649
200	102	-.209	.132	.210	-.635
200	103	-.221	.127	.194	-.659
200	104	-.195	.126	.206	-.642
200	105	-.246	.115	.099	-.669
200	106	-.176	.122	.176	-.680
200	107	-.215	.123	.130	-.721
200	108	-.197	.119	.156	-.664
200	109	-.255	.106	.068	-.594
200	110	-.231	.116	.144	-.601
200	111	-.258	.117	.132	-.630
200	112	-.233	.114	.137	-.597
200	113	-.253	.106	.112	-.626
200	114	-.199	.116	.204	-.582
200	115	-.222	.119	.182	-.609
200	116	-.225	.126	.147	-.906
200	117	-.237	.104	.102	-.719
200	118	-.177	.113	.226	-.643

WD	TAP	CPMEAN	CPRMS	CPMAX	CPMIN
200	119	-.231	.119	.275	-.814
200	120	-.213	.118	.292	-.782
200	121	-.284	.110	.098	-.686
200	122	-.187	.114	.183	-.612
200	123	-.218	.108	.141	-.580
200	124	-.151	.104	.162	-.547
200	125	-.239	.100	.065	-.574
200	126	-.193	.109	.145	-.565
200	127	-.273	.133	.155	-.730
200	128	-.259	.135	.161	-.728
200	129	-.196	.104	.133	-.535
200	130	-.163	.113	.184	-.547
200	131	-.206	.116	.146	-.601
200	132	-.193	.113	.165	-.549
200	133	-.222	.102	.127	-.644
200	134	-.139	.112	.240	-.547
200	135	-.165	.114	.225	-.604
200	136	-.142	.111	.241	-.561
200	137	-.197	.098	.119	-.553
200	138	-.158	.108	.193	-.544
200	139	-.182	.110	.184	-.584
200	140	-.168	.109	.189	-.567
200	141	-.231	.104	.081	-.617
200	142	-.173	.113	.179	-.565
200	143	-.198	.116	.185	-.599
200	144	-.183	.113	.183	-.576
200	145	-.201	.096	.104	-.532
200	146	-.155	.105	.175	-.531
200	147	-.183	.108	.162	-.552
200	148	-.161	.109	.220	-.673
200	149	-.207	.088	.046	-.527
200	150	-.157	.107	.178	-.573
200	151	-.204	.114	.133	-.645
200	152	-.179	.111	.143	-.624
200	153	-.217	.097	.133	-.581
200	154	-.162	.107	.212	-.603
200	155	-.177	.097	.142	-.552
200	156	-.162	.104	.198	-.546
200	157	-.186	.097	.120	-.505
200	158	-.148	.107	.189	-.508
200	159	-.199	.119	.153	-.654
200	160	-.175	.117	.168	-.601
200	161	-.193	.107	.128	-.584
200	162	-.141	.112	.214	-.540
200	163	-.166	.112	.222	-.557
200	164	-.155	.113	.205	-.549
200	165	-.196	.099	.119	-.535
200	166	-.147	.114	.254	-.579
200	167	-.153	.110	.193	-.525
200	168	-.130	.107	.211	-.487

WD	TAP	CPMEAN	CPRMS	CPMAX	CPMIN
200	169	-.168	.100	.177	-.544
200	170	-.132	.109	.242	-.559
200	171	-.156	.111	.215	-.581
200	172	-.136	.108	.232	-.537
200	173	-.181	.097	.117	-.495
200	174	-.124	.108	.189	-.497
200	175	-.147	.111	.173	-.527
200	176	-.125	.108	.191	-.461
200	177	-.137	.090	.197	-.455
200	178	-.140	.102	.221	-.503
200	179	-.163	.105	.192	-.534
200	180	-.148	.103	.202	-.525
200	181	-.146	.090	.144	-.456
200	182	-.142	.104	.309	-.492
200	183	-.171	.105	.164	-.523
200	184	-.149	.103	.184	-.494
200	185	-.146	.091	.196	-.542
200	186	-.143	.105	.250	-.600
200	187	-.166	.107	.230	-.623
200	188	-.149	.106	.239	-.609
200	189	-.141	.094	.184	-.473
200	190	-.141	.111	.229	-.527
200	191	-.168	.108	.203	-.535
200	201	-.238	.157	.344	-.888
200	202	-.222	.126	.167	-.744
200	203	-.226	.163	.281	-1.030
200	204	-.266	.163	.221	-1.189
200	205	-.244	.156	.221	-1.065
200	206	-.229	.125	.207	-.820
200	207	-.225	.137	.276	-.775
200	208	-.248	.140	.235	-1.024
200	209	-.231	.135	.179	-.990
200	210	-.222	.108	.132	-.652
200	211	-.233	.126	.265	-.743
200	212	-.254	.120	.222	-.728
200	213	-.220	.115	.236	-.628
200	214	-.213	.109	.113	-.681
200	215	-.206	.123	.154	-.718
200	216	-.284	.138	.203	-1.189
200	217	-.262	.135	.217	-1.039
200	218	-.253	.103	.078	-.643
200	219	-.234	.119	.119	-.699
200	220	-.264	.122	.118	-.808
200	221	-.240	.119	.150	-.717
200	222	-.221	.098	.142	-.631
200	223	-.201	.110	.203	-.582
200	224	-.219	.111	.188	-.603
200	225	-.234	.110	.195	-.675
200	226	-.225	.110	.122	-.634
200	227	-.210	.121	.185	-.642

APPENDIX A -- PRESSURE DATA: CONFIGURATION A: HOUSTON NATIONAL BANK

WD	TAP	CPMEAN	CPRMS	CPMAX	CPMIN
200	228	-.200	.123	.218	-.632
200	229	-.218	.127	.210	-.689
200	230	-.221	.112	.119	-.640
200	231	-.207	.127	.192	-.699
200	232	-.225	.127	.179	-.722
200	233	-.205	.125	.192	-.706
200	234	-.226	.112	.196	-.678
200	235	-.215	.124	.241	-.706
200	236	-.225	.120	.230	-.689
200	237	-.178	.118	.291	-.641
200	238	-.234	.091	.086	-.545
200	239	-.226	.104	.138	-.594
200	240	-.242	.103	.133	-.614
200	241	-.208	.102	.162	-.547
200	242	-.195	.096	.132	-.504
200	243	-.203	.128	.355	-.758
200	244	-.211	.114	.175	-.605
200	245	-.267	.127	.287	-.671
200	246	-.194	.090	.166	-.474
200	247	-.177	.107	.183	-.531
200	248	-.203	.114	.201	-.568
200	249	-.185	.112	.202	-.547
200	250	-.163	.109	.179	-.603
200	251	-.218	.109	.160	-.554
200	252	-.237	.110	.144	-.605
200	253	-.202	.104	.187	-.537
200	254	-.203	.094	.116	-.536
200	255	-.199	.111	.159	-.633
200	256	-.222	.121	.197	-1.013
200	257	-.198	.120	.220	-.897
200	258	-.184	.095	.145	-.517
200	259	-.177	.107	.189	-.539
200	260	-.188	.110	.206	-.581
200	261	-.190	.108	.189	-.566
200	262	-.186	.098	.150	-.604
200	263	-.176	.107	.171	-.633
200	264	-.266	.116	.091	-.757
200	265	-.213	.112	.158	-.690
200	266	-.193	.098	.130	-.486
200	267	-.183	.117	.193	-.606
200	268	-.269	.126	.160	-.851
200	269	-.196	.112	.166	-.572
200	270	-.164	.098	.187	-.449
200	271	-.154	.106	.207	-.481
200	272	-.244	.106	.117	-.587
200	273	-.201	.109	.145	-.564
200	274	-.203	.104	.166	-.538
200	275	-.193	.117	.247	-.583
200	276	-.280	.126	.189	-.700
200	277	-.183	.111	.259	-.556
200	278	-.169	.094	.155	-.533
200	279	-.177	.109	.202	-.571
200	280	-.149	.106	.234	-.504
200	281	-.181	.111	.212	-.620
200	282	-.153	.094	.144	-.459
200	283	-.151	.105	.154	-.520
200	284	-.238	.113	.095	-.621
200	285	-.192	.107	.127	-.558
200	286	-.178	.101	.223	-.525
200	287	-.172	.114	.283	-.583
200	288	-.255	.121	.226	-.687
200	301	.217	.250	1.209	-.716
200	302	.035	.147	.735	-.465
200	303	.165	.194	.915	-.413
200	304	-.123	.145	.365	-.624
200	305	.272	.244	1.198	-.602
200	306	-.133	.114	.313	-.558
200	307	.121	.173	.836	-.455
200	308	.240	.233	1.019	-.592
200	309	-.238	.132	.288	-.668
200	310	-.167	.103	.180	-.506
200	311	-.119	.119	.283	-.476
200	312	-.080	.137	.430	-.544
200	313	.061	.149	.670	-.473
200	314	.189	.157	.745	-.413
200	315	.284	.192	1.031	-.410
200	316	.234	.213	1.046	-.534
200	317	-.199	.114	.259	-.586
200	318	-.116	.100	.262	-.513
200	319	-.038	.121	.483	-.557
200	320	-.054	.141	.601	-.630
200	321	.059	.150	.698	-.462
200	322	.156	.181	.897	-.359
200	323	.180	.164	.877	-.418
200	324	-.255	.118	.191	-.685
200	325	-.174	.114	.209	-.563
200	326	-.113	.108	.237	-.547
200	327	-.083	.126	.359	-.580
200	328	-.133	.141	.387	-.650
200	329	-.037	.153	.577	-.656
200	330	-.016	.141	.615	-.555
200	331	-.177	.115	.188	-.713
200	332	-.262	.120	.099	-.815
200	333	-.201	.116	.166	-.723
200	334	-.168	.095	.147	-.581
200	335	-.155	.107	.201	-.580
200	336	-.240	.125	.140	-.786
200	337	-.205	.134	.257	-.763
200	338	-.181	.097	.191	-.524
200	339	-.173	.108	.241	-.538
200	340	-.263	.116	.159	-.690
200	341	-.205	.109	.169	-.560
200	342	-.175	.100	.134	-.565
200	343	-.173	.118	.185	-.716
200	344	-.281	.134	.143	-.815
200	345	-.203	.113	.167	-.591
200	346	-.187	.095	.158	-.509
200	347	-.176	.108	.222	-.544
200	348	-.269	.116	.162	-.683
200	349	-.217	.110	.212	-.639
200	350	-.257	.109	.105	-.624
200	351	-.194	.114	.174	-.553
200	352	-.208	.097	.144	-.740
200	353	-.174	.110	.194	-.554
200	354	-.236	.105	.123	-.595
200	355	-.170	.110	.195	-.562
200	356	-.195	.111	.187	-.632
200	357	-.158	.110	.207	-.587
200	358	-.213	.102	.125	-.577
200	359	-.146	.107	.212	-.517
200	360	-.181	.109	.196	-.558
200	361	-.156	.109	.205	-.557
200	362	-.221	.099	.118	-.565
200	401	.093	.230	.957	-1.262
200	402	.067	.175	.704	-.664
200	403	-.006	.132	.516	-.589
200	404	-.182	.116	.274	-.545
200	405	-.151	.123	.317	-.528
200	406	.023	.245	.830	-1.249
200	407	.086	.183	.703	-1.039
200	408	-.059	.117	.274	-.467
200	409	-.111	.113	.299	-.509
200	410	-.180	.118	.252	-.590
200	411	-.003	.244	.843	-1.041
200	412	.004	.165	.620	-.773
200	413	-.006	.124	.448	-.452
200	414	-.097	.114	.290	-.571
200	415	-.176	.122	.225	-.636
200	416	-.132	.247	.547	-1.311
200	417	-.052	.181	.567	-.862
200	418	-.052	.126	.380	-.458
200	419	-.148	.120	.258	-.535
200	420	-.270	.105	.037	-.680
200	421	-.240	.110	.090	-.634
200	422	-.276	.120	.195	-.733
200	423	-.163	.136	.392	-.669
200	424	-.181	.125	.286	-.638
200	425	-.070	.227	.683	-1.000
200	426	-.008	.150	.565	-.612
200	427	-.036	.119	.353	-.480

APPENDIX A -- PRESSURE DATA: CONFIGURATION A: HOUSTON NATIONAL BANK

WD	TAP	CPMEAN	CPRMS	CPMAX	CPMIN
200	428	-.216	.109	.133	-.653
200	429	-.196	.118	.188	-.698
200	430	-.300	.132	.118	-.881
200	431	-.183	.151	.410	-.676
200	432	-.154	.113	.254	-.585
200	433	-.127	.108	.180	-.519
200	434	-.302	.135	.088	-1.041
200	435	-.033	.118	.508	-.470
200	436	-.167	.102	.184	-.518
200	437	-.142	.106	.274	-.508
200	438	-.087	.188	.543	-.918
200	439	-.008	.145	.457	-.955
200	440	-.098	.113	.444	-.459
200	441	-.097	.114	.334	-.506
200	442	-.112	.119	.315	-.523
200	443	-.141	.116	.218	-.559
200	444	-.220	.109	.158	-.603
200	445	-.188	.115	.148	-.619
200	446	-.235	.120	.122	-.713
200	447	-.200	.119	.155	-.673
200	448	-.102	.123	.267	-.545
200	449	-.039	.122	.360	-.468
200	450	-.102	.117	.302	-.531
200	451	-.099	.118	.407	-.595
200	452	-.196	.109	.177	-.555
200	453	-.170	.119	.269	-.568
200	454	-.224	.118	.223	-.594
200	455	-.193	.118	.263	-.615
200	456	-.261	.109	.086	-.843
200	457	-.195	.122	.189	-.733
200	458	-.236	.118	.127	-.765
200	459	-.137	.109	.261	-.507
200	460	-.213	.104	.153	-.606
200	461	-.083	.118	.527	-.505
200	462	-.117	.115	.428	-.526
200	463	-.093	.107	.358	-.529
200	464	-.122	.093	.211	-.546
200	465	-.142	.107	.223	-.611
200	466	-.226	.113	.156	-.704
200	467	-.157	.109	.260	-.680
200	468	-.159	.095	.179	-.438
200	469	-.133	.112	.363	-.482
200	470	-.188	.116	.259	-.564
200	471	-.103	.112	.278	-.460
200	472	-.114	.096	.214	-.460
200	473	-.119	.108	.271	-.520
200	474	-.198	.115	.206	-.641
200	475	-.148	.108	.239	-.596
200	476	-.147	.096	.138	-.475
200	477	-.127	.110	.264	-.671
200	478	-.176	.116	.208	-.567
200	479	-.073	.114	.315	-.457
200	480	-.065	.099	.298	-.393
200	481	-.075	.111	.330	-.462
200	483	-.123	.110	.248	-.528
200	484	-.137	.089	.157	-.478
200	485	-.082	.111	.329	-.538
200	486	-.194	.108	.200	-.612
200	501	-.136	.089	.271	-.452
200	502	-.158	.102	.295	-.520
200	503	-.158	.098	.290	-.496
200	504	-.161	.103	.311	-.549
200	505	-.125	.094	.202	-.500
200	506	-.153	.106	.200	-.572
200	507	-.172	.108	.186	-.584
200	508	-.161	.111	.186	-.566
200	509	-.126	.092	.177	-.480
200	510	-.138	.108	.200	-.533
200	511	-.145	.107	.202	-.533
200	512	-.146	.109	.210	-.542
200	601	-.143	.107	.202	-.592
200	602	-.093	.090	.207	-.421
200	603	-.082	.103	.273	-.456
200	604	-.099	.109	.251	-.487
200	605	-.207	.117	.217	-.722
200	606	-.121	.091	.185	-.435
200	607	-.072	.109	.347	-.437
200	608	-.139	.104	.201	-.499
200	609	-.142	.106	.221	-.517
200	610	-.093	.092	.215	-.424
200	611	-.070	.113	.311	-.467
200	612	-.087	.116	.298	-.481
200	613	-.129	.107	.291	-.516
200	614	-.018	.092	.269	-.329
200	615	-.089	.106	.345	-.470
200	701	-.155	.109	.236	-.510
200	702	-.157	.103	.219	-.589
200	703	-.151	.108	.245	-.503
200	704	-.182	.124	.252	-.793
200	705	-.142	.110	.233	-.504
200	706	-.135	.092	.227	-.493
200	707	-.148	.120	.273	-.694
200	708	-.169	.109	.225	-.610
200	709	-.142	.110	.268	-.607
200	710	-.128	.089	.157	-.463
200	711	-.114	.105	.200	-.493
200	712	-.184	.158	.349	-.818
200	801	-.103	.101	.484	-.446
200	802	-.107	.118	.358	-.525
200	803	-.166	.115	.246	-.566
200	804	-.190	.115	.199	-.595
200	805	-.146	.089	.185	-.513
200	806	-.112	.122	.366	-.487
200	807	-.172	.104	.172	-.586
200	808	-.158	.102	.211	-.549
200	809	-.089	.102	.414	-.413
200	810	-.131	.101	.179	-.470
200	811	-.202	.103	.125	-.610
200	812	-.147	.095	.140	-.502
200	813	-.132	.092	.240	-.455
200	814	-.082	.124	.374	-.493
200	815	-.165	.115	.260	-.841
200	816	-.183	.111	.230	-.665
200	817	-.128	.087	.177	-.413
200	818	-.135	.110	.250	-.536
200	819	.108	.155	.821	-.375
200	820	-.061	.114	.338	-.476
200	821	-.169	.100	.170	-.533
200	822	-.122	.104	.234	-.492
200	823	-.142	.106	.207	-.501
200	901	-.101	.129	.526	-.543
200	902	-.138	.101	.201	-.475
200	903	-.121	.092	.223	-.404
200	904	-.084	.112	.308	-.450
200	905	-.098	.124	.535	-.480
200	906	-.055	.114	.333	-.421
200	907	-.181	.106	.193	-.588
200	908	-.079	.116	.312	-.508
200	909	-.073	.112	.308	-.472
200	910	-.192	.115	.211	-.618
200	911	-.087	.098	.233	-.457
200	912	-.105	.112	.291	-.561
200	913	-.163	.110	.213	-.608
200	914	-.144	.111	.227	-.613
200	915	-.151	.102	.221	-.492
210	1	-.190	.134	.438	-.693
210	2	-.193	.117	.159	-.736
210	3	-.168	.123	.248	-.632
210	4	-.236	.125	.157	-.758
210	5	-.224	.147	.256	-.839
210	6	-.209	.131	.248	-.777
210	7	-.106	.137	.428	-.620
210	8	-.184	.147	.342	-.790
210	9	-.258	.141	.357	-.928
210	10	-.264	.147	.197	-1.078
210	11	-.156	.184	.539	-.816
210	12	-.133	.193	.604	-.818
210	13	-.199	.112	.185	-.621
210	14	-.180	.092	.145	-.500
210	15	-.167	.106	.221	-.653

APPENDIX A -- PRESSURE DATA: CONFIGURATION A; HOUSTON NATIONAL BANK

WD	TAP	CPMEAN	CPRMS	CPMAX	CPMIN
210	16	-.263	.112	.157	-.766
210	17	-.161	.113	.227	-.554
210	18	-.182	.104	.200	-.569
210	19	-.151	.113	.292	-.613
210	20	-.231	.126	.197	-.815
210	21	-.128	.116	.258	-.620
210	22	-.160	.106	.200	-.577
210	23	-.143	.115	.289	-.694
210	24	-.234	.120	.215	-.639
210	25	-.153	.112	.261	-.557
210	26	-.145	.093	.174	-.481
210	27	-.143	.108	.230	-.515
210	28	-.236	.117	.171	-.646
210	29	-.152	.111	.232	-.575
210	30	-.160	.093	.178	-.459
210	31	-.169	.115	.219	-.530
210	32	-.221	.114	.178	-.585
210	101	-.207	.109	.100	-.717
210	102	-.159	.114	.177	-.671
210	103	-.178	.112	.156	-.650
210	104	-.153	.110	.173	-.598
210	105	-.198	.101	.176	-.766
210	106	-.139	.105	.234	-.482
210	107	-.167	.106	.221	-.505
210	108	-.150	.108	.240	-.581
210	109	-.182	.095	.140	-.516
210	110	-.148	.104	.202	-.515
210	111	-.174	.106	.179	-.550
210	112	-.148	.104	.215	-.523
210	113	-.179	.092	.101	-.565
210	114	-.147	.104	.171	-.589
210	115	-.174	.107	.159	-.630
210	116	-.126	.105	.163	-.523
210	117	-.167	.092	.179	-.504
210	118	-.123	.104	.273	-.513
210	119	-.175	.109	.183	-.546
210	120	-.155	.107	.203	-.520
210	121	-.196	.092	.083	-.544
210	122	-.125	.100	.183	-.560
210	123	-.152	.101	.178	-.553
210	124	-.082	.093	.222	-.411
210	125	-.188	.094	.110	-.525
210	126	-.150	.103	.183	-.519
210	127	-.189	.110	.149	-.782
210	128	-.165	.109	.158	-.915
210	129	-.153	.093	.172	-.518
210	130	-.116	.102	.247	-.528
210	131	-.145	.105	.211	-.574
210	132	-.147	.106	.253	-.585
210	133	-.184	.095	.124	-.577
210	134	-.110	.100	.229	-.519
210	135	-.132	.102	.195	-.528
210	136	-.107	.099	.219	-.500
210	137	-.146	.086	.135	-.401
210	138	-.111	.096	.194	-.392
210	139	-.137	.098	.180	-.431
210	140	-.114	.095	.179	-.395
210	141	-.160	.092	.129	-.510
210	142	-.118	.101	.210	-.535
210	143	-.143	.104	.192	-.567
210	144	-.119	.101	.207	-.543
210	145	-.156	.084	.092	-.410
210	146	-.122	.095	.175	-.431
210	147	-.147	.097	.156	-.462
210	148	-.116	.094	.185	-.408
210	149	-.154	.075	.083	-.417
210	150	-.112	.094	.215	-.427
210	151	-.149	.099	.189	-.518
210	152	-.123	.097	.202	-.474
210	153	-.161	.094	.208	-.466
210	154	-.111	.103	.276	-.450
210	155	-.135	.095	.223	-.454
210	156	-.120	.101	.250	-.457
210	157	-.167	.089	.135	-.492
210	158	-.127	.098	.206	-.485
210	159	-.153	.100	.183	-.488
210	160	-.127	.098	.202	-.456
210	161	-.152	.089	.179	-.461
210	162	-.106	.098	.241	-.444
210	163	-.133	.099	.229	-.488
210	164	-.120	.096	.236	-.453
210	165	-.165	.094	.179	-.493
210	166	-.108	.103	.278	-.493
210	167	-.125	.105	.258	-.510
210	168	-.101	.102	.271	-.476
210	169	-.143	.093	.156	-.565
210	170	-.106	.102	.210	-.564
210	171	-.132	.104	.188	-.599
210	172	-.107	.101	.205	-.565
210	173	-.142	.088	.149	-.458
210	174	-.091	.097	.225	-.431
210	175	-.115	.099	.212	-.483
210	176	-.092	.096	.240	-.437
210	177	-.109	.090	.238	-.407
210	178	-.123	.104	.286	-.461
210	179	-.143	.106	.275	-.492
210	180	-.132	.105	.295	-.474
210	181	-.105	.094	.194	-.440
210	182	-.130	.097	.196	-.501
210	183	-.132	.110	.215	-.506
210	184	-.118	.108	.224	-.486
210	185	-.107	.088	.247	-.462
210	186	-.116	.101	.282	-.525
210	187	-.135	.102	.269	-.542
210	188	-.121	.102	.284	-.526
210	189	-.109	.093	.211	-.442
210	190	-.119	.112	.256	-.514
210	191	-.139	.108	.222	-.515
210	201	-.203	.151	.240	-1.004
210	202	-.186	.123	.166	-.804
210	203	-.224	.171	.245	-.950
210	204	-.307	.218	.378	-1.336
210	205	-.319	.224	.452	-1.413
210	206	-.158	.109	.187	-.586
210	207	-.158	.126	.239	-.609
210	208	-.215	.160	.357	-.832
210	209	-.253	.180	.540	-1.096
210	210	-.267	.152	.297	-1.182
210	211	-.190	.128	.230	-.989
210	212	-.208	.128	.210	-.896
210	213	-.228	.149	.154	-1.004
210	214	-.250	.132	.232	-1.087
210	215	-.255	.151	.326	-1.072
210	216	-.173	.113	.157	-.738
210	217	-.156	.108	.194	-.632
210	218	-.168	.099	.166	-.543
210	219	-.166	.115	.226	-.575
210	220	-.207	.128	.236	-.994
210	221	-.192	.127	.215	-.821
210	222	-.214	.125	.239	-.650
210	223	-.251	.162	.282	-1.439
210	224	-.293	.180	.271	-1.513
210	225	-.141	.114	.277	-.550
210	226	-.132	.093	.196	-.465
210	227	-.163	.107	.200	-.558
210	228	-.187	.107	.190	-.611
210	229	-.193	.118	.203	-.607
210	230	-.172	.104	.157	-.610
210	231	-.200	.145	.295	-.777
210	232	-.265	.165	.189	-1.389
210	233	-.252	.160	.200	-1.302
210	234	-.132	.092	.176	-.429
210	235	-.131	.108	.223	-.527
210	236	-.157	.113	.428	-.549
210	237	-.169	.106	.142	-.530
210	238	-.135	.109	.190	-.614
210	239	-.135	.125	.247	-.669
210	240	-.161	.129	.234	-.728
210	241	-.157	.129	.262	-.754
210	242	-.190	.108	.266	-.592

APPENDIX A -- PRESSURE DATA: CONFIGURATION A: HOUSTON NATIONAL BANK

WD	TAP	CPMEAN	CPRMS	CPMAX	CPMIN
210	243	-.232	.154	.233	-1.351
210	244	-.280	.176	.233	-1.525
210	245	-.242	.120	.178	-.745
210	246	-.155	.080	.110	-.433
210	247	-.142	.097	.167	-.547
210	248	-.154	.109	.237	-.602
210	249	-.140	.108	.236	-.594
210	250	-.135	.111	.226	-.467
210	251	-.139	.107	.265	-.486
210	252	-.156	.109	.246	-.496
210	253	-.139	.111	.250	-.624
210	254	-.132	.094	.202	-.418
210	255	-.150	.116	.245	-.555
210	256	-.212	.140	.231	-.905
210	257	-.199	.140	.254	-.987
210	258	-.126	.093	.210	-.463
210	259	-.125	.108	.267	-.525
210	260	-.167	.110	.230	-.580
210	261	-.135	.107	.250	-.509
210	262	-.132	.095	.197	-.488
210	263	-.132	.106	.244	-.533
210	264	-.217	.115	.191	-.636
210	265	-.164	.111	.225	-.543
210	266	-.136	.088	.189	-.455
210	267	-.154	.109	.176	-.595
210	268	-.250	.118	.104	-.708
210	269	-.152	.101	.166	-.535
210	270	-.127	.097	.198	-.474
210	271	-.120	.108	.262	-.502
210	272	-.209	.110	.163	-.598
210	273	-.155	.110	.205	-.538
210	274	-.124	.095	.225	-.491
210	275	-.120	.110	.270	-.571
210	276	-.208	.119	.216	-.692
210	277	-.145	.108	.263	-.621
210	278	-.124	.093	.169	-.454
210	279	-.123	.105	.188	-.513
210	280	-.109	.118	.290	-.467
210	281	-.142	.110	.190	-.514
210	282	-.115	.089	.252	-.459
210	283	-.116	.102	.294	-.514
210	284	-.208	.110	.205	-.630
210	285	-.150	.104	.240	-.552
210	286	-.116	.096	.214	-.409
210	287	-.088	.126	.481	-.441
210	288	-.174	.134	.419	-.556
210	301	-.009	.209	1.040	-1.192
210	302	-.042	.135	.477	-.612
210	303	.007	.151	.694	-.596
210	304	-.160	.149	.720	-.806
210	305	-.005	.188	.953	-.738
210	306	-.118	.118	.454	-.521
210	307	-.010	.139	.545	-.432
210	308	-.053	.213	1.050	-.698
210	309	-.225	.164	.469	-.733
210	310	-.136	.124	.561	-.609
210	311	-.093	.135	.699	-.523
210	312	-.123	.139	.629	-.621
210	313	-.037	.140	.641	-.512
210	314	.003	.126	.544	-.359
210	315	.034	.178	.744	-.452
210	316	-.053	.209	.829	-.633
210	317	-.172	.131	.402	-.729
210	318	-.096	.104	.446	-.426
210	319	-.063	.110	.460	-.469
210	320	-.136	.120	.335	-.552
210	321	-.064	.121	.528	-.473
210	322	-.011	.156	.781	-.525
210	323	-.011	.132	.517	-.501
210	324	-.198	.141	.511	-.747
210	325	-.118	.127	.496	-.522
210	326	-.086	.099	.225	-.409
210	327	-.078	.111	.256	-.434
210	328	-.164	.120	.237	-.598
210	329	-.102	.118	.333	-.541
210	330	-.085	.108	.392	-.527
210	331	-.129	.122	.369	-.590
210	332	-.212	.126	.237	-.709
210	333	-.145	.116	.295	-.580
210	334	-.106	.096	.214	-.460
210	335	-.107	.107	.256	-.502
210	336	-.203	.116	.174	-.636
210	337	-.150	.113	.207	-.566
210	338	-.127	.102	.305	-.499
210	339	-.120	.113	.358	-.545
210	340	-.211	.119	.278	-.663
210	341	-.148	.112	.254	-.573
210	342	-.119	.095	.169	-.457
210	343	-.119	.107	.209	-.519
210	344	-.216	.116	.147	-.654
210	345	-.153	.114	.208	-.653
210	346	-.117	.093	.229	-.455
210	347	-.107	.105	.288	-.489
210	348	-.201	.114	.226	-.603
210	349	-.139	.108	.265	-.512
210	350	-.062	.097	.273	-.447
210	351	-.116	.110	.262	-.561
210	352	-.142	.093	.194	-.464
210	353	-.116	.114	.295	-.619
210	354	-.055	.089	.270	-.389
210	355	-.109	.102	.261	-.472
210	356	-.133	.108	.240	-.661
210	357	-.112	.107	.289	-.472
210	358	-.040	.092	.278	-.399
210	359	-.093	.106	.270	-.511
210	360	-.113	.106	.253	-.524
210	361	-.103	.108	.263	-.525
210	362	-.053	.094	.281	-.424
210	401	-.118	.221	.640	-1.118
210	402	-.121	.199	.644	-1.307
210	403	-.105	.144	.432	-.638
210	404	-.085	.100	.250	-.442
210	405	-.155	.115	.288	-.558
210	406	-.157	.213	.686	-1.122
210	407	-.116	.191	.646	-1.107
210	408	-.053	.113	.365	-.445
210	409	-.128	.114	.286	-.523
210	410	-.170	.115	.223	-.555
210	411	-.174	.200	.553	-1.116
210	412	-.076	.153	.546	-.740
210	413	-.098	.135	.361	-.663
210	414	-.115	.113	.243	-.582
210	415	-.153	.118	.312	-.602
210	416	-.161	.179	.425	-1.579
210	417	-.215	.183	.396	-1.159
210	418	-.145	.133	.294	-.778
210	419	-.159	.119	.250	-.775
210	420	-.128	.098	.184	-.589
210	421	-.174	.108	.158	-.585
210	422	-.199	.116	.188	-.709
210	423	-.126	.120	.369	-.536
210	424	-.139	.118	.272	-.714
210	425	-.152	.172	.674	-1.309
210	426	-.142	.132	.274	-.834
210	427	-.107	.121	.304	-.681
210	428	-.115	.092	.246	-.507
210	429	-.157	.107	.232	-.582
210	430	-.215	.110	.153	-.657
210	431	-.140	.120	.309	-.647
210	432	-.089	.102	.249	-.493
210	433	-.121	.114	.251	-.532
210	434	-.210	.126	.202	-.697
210	435	-.090	.125	.408	-.457
210	436	-.099	.094	.198	-.450
210	437	-.128	.105	.222	-.505
210	438	-.153	.147	.348	-1.087
210	439	-.113	.136	.295	-.815
210	440	-.082	.097	.215	-.560
210	441	-.104	.108	.245	-.596
210	442	-.126	.113	.324	-.635

APPENDIX A -- PRESSURE DATA: CONFIGURATION A; HOUSTON NATIONAL BANK

WD	TAP	CPMEAN	CPRMS	CPMAX	CPMIN
210	443	-.126	.112	.270	-.591
210	444	-.126	.097	.217	-.441
210	445	-.138	.107	.194	-.480
210	446	-.175	.109	.163	-.538
210	447	-.154	.109	.198	-.522
210	448	-.116	.116	.260	-.672
210	449	-.106	.119	.313	-.626
210	450	-.133	.122	.262	-.584
210	451	-.113	.121	.310	-.505
210	452	-.117	.093	.180	-.418
210	453	-.128	.111	.214	-.511
210	454	-.169	.107	.177	-.539
210	455	-.152	.107	.198	-.514
210	456	-.148	.097	.158	-.520
210	457	-.139	.117	.230	-.598
210	458	-.174	.114	.171	-.627
210	459	-.121	.111	.209	-.500
210	460	-.146	.097	.177	-.576
210	461	-.127	.118	.248	-1.031
210	462	-.155	.117	.248	-.974
210	463	-.126	.112	.242	-.633
210	464	-.109	.099	.281	-.424
210	465	-.116	.113	.359	-.479
210	466	-.207	.121	.311	-.586
210	467	-.128	.113	.371	-.490
210	468	-.131	.105	.226	-.512
210	469	-.124	.120	.251	-.545
210	470	-.207	.127	.189	-.644
210	471	-.120	.119	.273	-.549
210	472	-.110	.102	.306	-.542
210	473	-.111	.117	.360	-.588
210	474	-.201	.127	.308	-.715
210	475	-.125	.118	.317	-.592
210	476	-.118	.095	.200	-.408
210	477	-.111	.105	.282	-.479
210	478	-.191	.117	.187	-.554
210	479	-.104	.111	.246	-.458
210	480	-.103	.098	.221	-.506
210	481	-.103	.112	.278	-.580
210	483	-.121	.114	.287	-.598
210	484	-.115	.100	.186	-.455
210	485	-.014	.129	.397	-.479
210	486	-.174	.123	.192	-.588
210	501	-.132	.090	.203	-.456
210	502	-.117	.100	.240	-.488
210	503	-.143	.098	.226	-.489
210	504	-.124	.102	.245	-.499
210	505	-.126	.092	.181	-.477
210	506	-.113	.100	.215	-.500
210	507	-.153	.104	.192	-.579

WD	TAP	CPMEAN	CPRMS	CPMAX	CPMIN
210	508	-.118	.103	.211	-.519
210	509	-.132	.092	.198	-.436
210	510	-.109	.103	.242	-.463
210	511	-.140	.104	.215	-.491
210	512	-.118	.105	.271	-.465
210	601	-.117	.103	.274	-.513
210	602	-.116	.096	.185	-.523
210	603	-.106	.095	.244	-.415
210	604	-.132	.109	.208	-.585
210	605	-.209	.114	.228	-.625
210	606	-.124	.093	.169	-.456
210	607	-.095	.104	.256	-.492
210	608	-.139	.106	.212	-.565
210	609	-.115	.105	.227	-.501
210	610	-.118	.099	.218	-.470
210	611	-.092	.113	.289	-.519
210	612	-.133	.116	.239	-.578
210	613	-.116	.112	.254	-.539
210	614	.001	.095	.305	-.344
210	615	-.000	.124	.424	-.406
210	701	-.126	.112	.202	-.522
210	702	-.137	.096	.179	-.512
210	703	-.107	.100	.249	-.433
210	704	-.153	.109	.226	-.547
210	705	-.107	.102	.242	-.482
210	706	-.131	.093	.213	-.438
210	707	-.118	.111	.276	-.645
210	708	-.143	.105	.250	-.481
210	709	-.109	.106	.302	-.451
210	710	-.114	.092	.245	-.441
210	711	-.093	.099	.260	-.456
210	712	-.163	.124	.270	-.776
210	801	-.131	.096	.216	-.459
210	802	-.106	.106	.304	-.450
210	803	-.155	.104	.183	-.494
210	804	-.130	.105	.240	-.471
210	805	-.137	.096	.169	-.477
210	806	-.113	.114	.379	-.456
210	807	-.158	.110	.217	-.627
210	808	-.121	.109	.234	-.531
210	809	-.102	.104	.297	-.472
210	810	-.108	.110	.350	-.527
210	811	-.169	.115	.267	-.579
210	812	-.117	.106	.331	-.514
210	813	-.130	.098	.192	-.588
210	814	-.085	.115	.352	-.518
210	815	-.148	.113	.200	-.607
210	816	-.130	.112	.243	-.620
210	817	-.132	.082	.140	-.389
210	818	-.112	.101	.226	-.447

WD	TAP	CPMEAN	CPRMS	CPMAX	CPMIN
210	819	.009	.126	.594	-.376
210	820	-.076	.107	.297	-.433
210	821	-.147	.103	.156	-.502
210	822	-.106	.108	.201	-.513
210	823	-.143	.111	.173	-.565
210	901	-.140	.114	.352	-.584
210	902	-.119	.103	.190	-.516
210	903	-.123	.088	.185	-.444
210	904	-.098	.101	.216	-.475
210	905	-.127	.106	.248	-.478
210	906	-.097	.098	.214	-.473
210	907	-.160	.099	.221	-.502
210	908	-.097	.109	.364	-.529
210	909	-.126	.109	.299	-.545
210	910	-.144	.110	.291	-.533
210	911	-.119	.101	.216	-.439
210	912	-.103	.114	.279	-.489
210	913	-.154	.112	.198	-.516
210	914	-.122	.111	.228	-.462
210	915	-.127	.105	.258	-.470
220	1	-.166	.106	.157	-.550
220	2	-.170	.093	.119	-.551
220	3	-.181	.129	.198	-1.015
220	4	-.308	.162	.123	-1.144
220	5	-.137	.126	.265	-.706
220	6	-.129	.110	.252	-.595
220	7	-.229	.184	.275	-1.205
220	8	-.382	.190	.242	-1.168
220	9	-.327	.184	.405	-1.222
220	10	-.320	.196	.397	-1.370
220	11	-.390	.247	.583	-1.612
220	12	-.311	.192	.351	-1.561
220	13	-.173	.108	.232	-.542
220	14	-.175	.095	.146	-.494
220	15	-.188	.114	.252	-.676
220	16	-.303	.124	.171	-.753
220	17	-.159	.111	.274	-.537
220	18	-.180	.096	.128	-.547
220	19	-.181	.114	.184	-.695
220	20	-.219	.124	.265	-.664
220	21	-.151	.110	.227	-.565
220	22	-.162	.107	.187	-.568
220	23	-.142	.120	.255	-.597
220	24	-.214	.117	.271	-.644
220	25	-.137	.108	.269	-.534
220	26	-.134	.093	.207	-.466
220	27	-.122	.106	.269	-.498
220	28	-.228	.117	.217	-.641
220	29	-.129	.106	.248	-.505
220	30	-.144	.094	.201	-.457

APPENDIX A -- PRESSURE DATA: CONFIGURATION A; HOUSTON NATIONAL BANK

WD	TAP	CPMEAN	CPRMS	CPMAX	CPMIN
220	31	-.162	.109	.206	-.542
220	32	-.219	.113	.195	-.577
220	101	-.243	.121	.214	-.775
220	102	-.204	.130	.272	-.765
220	103	-.224	.128	.256	-.689
220	104	-.199	.129	.266	-.733
220	105	-.226	.119	.186	-.792
220	106	-.194	.130	.278	-.850
220	107	-.201	.124	.285	-.761
220	108	-.162	.121	.283	-.755
220	109	-.222	.116	.150	-.939
220	110	-.176	.123	.216	-.677
220	111	-.197	.122	.196	-.686
220	112	-.154	.114	.232	-.533
220	113	-.221	.104	.142	-.664
220	114	-.185	.114	.219	-.680
220	115	-.211	.118	.211	-.720
220	116	-.148	.118	.207	-.767
220	117	-.174	.102	.187	-.515
220	118	-.129	.115	.252	-.676
220	119	-.199	.124	.173	-.631
220	120	-.161	.117	.199	-.554
220	121	-.189	.097	.134	-.597
220	122	-.128	.105	.196	-.472
220	123	-.154	.110	.234	-.532
220	124	-.122	.111	.243	-.566
220	125	-.218	.106	.173	-.585
220	126	-.178	.115	.229	-.576
220	127	-.176	.110	.183	-.610
220	128	-.140	.105	.194	-.528
220	129	-.168	.093	.155	-.510
220	130	-.123	.100	.216	-.530
220	131	-.149	.103	.206	-.553
220	132	-.202	.119	.303	-.933
220	133	-.249	.108	.148	-.702
220	134	-.132	.103	.307	-.524
220	135	-.157	.104	.281	-.502
220	136	-.126	.101	.302	-.445
220	137	-.159	.090	.117	-.527
220	138	-.120	.099	.183	-.531
220	139	-.146	.102	.168	-.566
220	140	-.117	.099	.185	-.515
220	141	-.152	.091	.186	-.490
220	142	-.123	.101	.266	-.466
220	143	-.149	.102	.255	-.497
220	144	-.116	.098	.263	-.443
220	145	-.154	.092	.150	-.511
220	146	-.114	.103	.231	-.512
220	147	-.142	.105	.212	-.544
220	148	-.114	.100	.204	-.478
220	149	-.156	.074	.092	-.363
220	150	-.113	.097	.213	-.454
220	151	-.154	.100	.211	-.494
220	152	-.125	.097	.225	-.452
220	153	-.165	.090	.161	-.466
220	154	-.117	.098	.217	-.433
220	155	-.144	.092	.159	-.440
220	156	-.126	.098	.214	-.465
220	157	-.159	.093	.201	-.430
220	158	-.119	.102	.286	-.411
220	159	-.152	.104	.215	-.491
220	160	-.123	.101	.232	-.432
220	161	-.140	.097	.268	-.536
220	162	-.097	.106	.338	-.503
220	163	-.126	.110	.337	-.551
220	164	-.117	.108	.332	-.583
220	165	-.176	.103	.150	-.508
220	166	-.110	.109	.262	-.494
220	167	-.137	.111	.241	-.535
220	168	-.107	.108	.260	-.486
220	169	-.144	.089	.170	-.412
220	170	-.101	.098	.246	-.400
220	171	-.128	.099	.221	-.430
220	172	-.099	.097	.247	-.394
220	173	-.143	.089	.173	-.438
220	174	-.109	.097	.250	-.451
220	175	-.137	.099	.230	-.486
220	176	-.104	.096	.243	-.439
220	177	-.079	.090	.257	-.388
220	178	-.117	.106	.264	-.485
220	179	-.125	.108	.256	-.499
220	180	-.122	.107	.257	-.490
220	181	-.087	.085	.209	-.366
220	182	-.125	.090	.166	-.533
220	183	-.129	.101	.239	-.470
220	184	-.125	.100	.234	-.459
220	185	-.077	.094	.183	-.397
220	186	-.118	.110	.205	-.494
220	187	-.130	.111	.180	-.512
220	188	-.126	.112	.195	-.524
220	189	-.069	.087	.209	-.378
220	190	-.109	.106	.221	-.499
220	191	-.120	.101	.193	-.490
220	201	-.171	.120	.191	-.593
220	202	-.118	.103	.210	-.510
220	203	-.144	.136	.270	-.754
220	204	-.278	.206	.323	-1.268
220	205	-.393	.236	.388	-1.651
220	206	-.144	.099	.157	-.595
220	207	-.158	.110	.205	-.618
220	208	-.137	.126	.297	-.649
220	209	-.311	.226	.329	-1.346
220	210	-.328	.211	.374	-1.379
220	211	-.154	.110	.221	-.539
220	212	-.154	.107	.236	-.481
220	213	-.145	.129	.368	-.844
220	214	-.286	.196	.254	-1.408
220	215	-.385	.243	.321	-1.590
220	216	-.195	.136	.223	-.841
220	217	-.183	.128	.234	-.722
220	218	-.169	.096	.154	-.583
220	219	-.191	.112	.239	-.618
220	220	-.193	.112	.217	-.578
220	221	-.174	.114	.237	-.720
220	222	-.135	.114	.257	-.683
220	223	-.367	.252	.299	-1.548
220	224	-.503	.318	.324	-2.164
220	225	-.128	.123	.305	-.531
220	226	-.100	.101	.295	-.457
220	227	-.205	.119	.174	-.759
220	228	-.217	.115	.144	-.720
220	229	-.191	.114	.194	-.623
220	230	-.133	.094	.165	-.443
220	231	-.155	.136	.310	-.782
220	232	-.340	.219	.326	-1.479
220	233	-.363	.213	.376	-1.534
220	234	-.089	.086	.207	-.427
220	235	-.099	.105	.256	-.511
220	236	-.130	.118	.312	-.646
220	237	-.216	.110	.171	-.683
220	238	-.108	.089	.147	-.424
220	239	-.127	.107	.194	-.507
220	240	-.134	.109	.232	-.511
220	241	-.143	.109	.194	-.517
220	242	-.116	.095	.263	-.462
220	243	-.273	.179	.349	-1.450
220	244	-.332	.191	.327	-1.567
220	245	-.233	.112	.126	-.722
220	246	-.140	.073	.082	-.400
220	247	-.126	.094	.149	-.456
220	248	-.145	.105	.174	-.514
220	249	-.138	.105	.176	-.507
220	250	-.127	.105	.240	-.502
220	251	-.124	.100	.261	-.446
220	252	-.134	.101	.251	-.466
220	253	-.115	.103	.300	-.475
220	254	-.091	.088	.171	-.378
220	255	-.111	.110	.231	-.544
220	256	-.257	.170	.226	-1.145
220	257	-.279	.171	.227	-1.621

APPENDIX A -- PRESSURE DATA: CONFIGURATION A: HOUSTON NATIONAL BANK

WD	TAP	CPMEAN	CPRMS	CPMAX	CPMIN
220	258	-.123	.088	.138	-.443
220	259	-.144	.104	.200	-.502
220	260	-.164	.106	.155	-.551
220	261	-.131	.102	.171	-.496
220	262	-.120	.094	.283	-.443
220	263	-.129	.107	.361	-.474
220	264	-.215	.116	.331	-.622
220	265	-.146	.110	.400	-.511
220	266	-.108	.096	.230	-.444
220	267	-.202	.158	.302	-.971
220	268	-.332	.167	.244	-1.146
220	269	-.147	.105	.204	-.487
220	270	-.114	.098	.214	-.570
220	271	-.114	.110	.257	-.626
220	272	-.214	.112	.184	-.721
220	273	-.154	.112	.234	-.653
220	274	-.111	.092	.205	-.426
220	275	-.125	.123	.296	-.634
220	276	-.241	.140	.246	-.871
220	277	-.149	.107	.234	-.513
220	278	-.129	.087	.182	-.484
220	279	-.127	.099	.219	-.551
220	280	-.106	.099	.198	-.501
220	281	-.138	.102	.198	-.578
220	282	-.109	.090	.195	-.399
220	283	-.112	.103	.221	-.442
220	284	-.222	.111	.176	-.603
220	285	-.147	.106	.207	-.469
220	286	-.092	.089	.184	-.380
220	287	-.016	.127	.577	-.409
220	288	-.102	.136	.516	-.620
220	301	.047	.191	.946	-.782
220	302	.169	.218	.947	-.596
220	303	.160	.218	1.021	-.611
220	304	.079	.259	1.036	-.900
220	305	-.005	.172	.739	-.610
220	306	.133	.213	.870	-.520
220	307	.172	.209	.976	-.362
220	308	-.156	.152	.440	-.639
220	309	.042	.264	1.061	-.934
220	310	.081	.201	.800	-.633
220	311	.157	.233	1.002	-.510
220	312	.110	.227	1.035	-.523
220	313	.120	.190	.949	-.454
220	314	.096	.153	.794	-.343
220	315	-.021	.136	.497	-.540
220	316	-.186	.144	.333	-.704
220	317	-.031	.173	.807	-.519
220	318	.064	.149	.617	-.441
220	319	.088	.155	.732	-.352

WD	TAP	CPMEAN	CPRMS	CPMAX	CPMIN
220	320	-.012	.156	.640	-.507
220	321	.004	.136	.787	-.409
220	322	-.055	.117	.479	-.507
220	323	-.116	.107	.304	-.544
220	324	-.090	.157	.478	-.655
220	325	.009	.145	.580	-.543
220	326	.052	.122	.578	-.354
220	327	.028	.127	.525	-.380
220	328	-.096	.129	.426	-.510
220	329	-.110	.116	.379	-.534
220	330	-.129	.095	.219	-.487
220	331	-.010	.138	.545	-.436
220	332	-.072	.148	.555	-.548
220	333	-.022	.128	.569	-.395
220	334	-.019	.102	.314	-.481
220	335	-.045	.107	.358	-.601
220	336	-.190	.114	.178	-.772
220	337	-.160	.112	.202	-.709
220	338	-.022	.110	.420	-.333
220	339	-.001	.125	.527	-.367
220	340	-.100	.129	.762	-.513
220	341	-.062	.114	.492	-.448
220	342	-.053	.096	.283	-.363
220	343	-.095	.106	.269	-.510
220	344	-.224	.116	.164	-.718
220	345	-.055	.121	.550	-.523
220	346	-.035	.094	.340	-.385
220	347	-.040	.102	.277	-.399
220	348	-.148	.108	.197	-.554
220	349	-.099	.100	.223	-.477
220	350	-.145	.098	.163	-.475
220	351	-.115	.104	.216	-.529
220	352	-.112	.087	.166	-.406
220	353	-.104	.107	.215	-.474
220	354	-.122	.097	.225	-.454
220	355	-.067	.101	.299	-.424
220	356	-.112	.117	.305	-.566
220	357	-.069	.111	.338	-.489
220	358	-.112	.107	.243	-.462
220	359	-.058	.112	.321	-.428
220	360	-.093	.114	.293	-.469
220	361	-.065	.113	.323	-.457
220	362	-.116	.103	.257	-.488
220	401	-.439	.257	.340	-1.921
220	402	-.478	.285	.310	-1.648
220	403	-.259	.200	.364	-1.159
220	404	-.271	.140	.233	-.977
220	405	-.213	.148	.333	-1.190
220	406	-.402	.196	.259	-1.358
220	407	-.371	.204	.273	-1.431

WD	TAP	CPMEAN	CPRMS	CPMAX	CPMIN
220	408	-.365	.179	.050	-1.255
220	409	-.226	.161	.216	-1.309
220	410	-.256	.152	.196	-1.035
220	411	-.331	.168	.238	-1.177
220	412	-.421	.177	.123	-1.337
220	413	-.291	.172	.269	-1.051
220	414	-.217	.155	.335	-.811
220	415	-.255	.178	.200	-1.380
220	416	-.385	.158	.051	-1.448
220	417	-.403	.176	.107	-1.334
220	418	-.324	.166	.121	-1.295
220	419	-.249	.154	.200	-1.089
220	420	-.318	.160	.174	-1.491
220	421	-.174	.111	.207	-.593
220	422	-.210	.122	.334	-.734
220	423	-.152	.125	.227	-.632
220	424	-.155	.118	.291	-.628
220	425	-.272	.163	.199	-1.610
220	426	-.265	.127	.084	-.933
220	427	-.254	.166	.218	-1.281
220	428	-.280	.140	.113	-.963
220	429	-.210	.150	.216	-.851
220	430	-.206	.117	.184	-.604
220	431	-.154	.121	.267	-.606
220	432	-.213	.113	.117	-.631
220	433	-.149	.116	.202	-.570
220	434	-.214	.120	.238	-.710
220	435	-.152	.129	.306	-.780
220	436	-.206	.110	.228	-.626
220	437	-.141	.114	.238	-.553
220	438	-.296	.169	.239	-1.364
220	439	-.267	.168	.276	-1.536
220	440	-.325	.158	.288	-1.259
220	441	-.189	.136	.361	-.857
220	442	-.200	.126	.270	-.748
220	443	-.154	.117	.218	-.601
220	444	-.220	.112	.143	-.832
220	445	-.133	.110	.218	-.609
220	446	-.169	.113	.204	-.667
220	447	-.140	.111	.226	-.624
220	448	-.298	.150	.109	-1.643
220	449	-.197	.132	.181	-1.172
220	450	-.234	.149	.181	-.812
220	451	-.163	.131	.208	-.638
220	452	-.211	.110	.167	-.598
220	453	-.127	.117	.269	-.576
220	454	-.169	.116	.222	-.609
220	455	-.135	.114	.239	-.532
220	456	-.193	.101	.231	-.544
220	457	-.118	.111	.335	-.499

APPENDIX A -- PRESSURE DATA: CONFIGURATION A: HOUSTON NATIONAL BANK

WD	TAP	CPMEAN	CPRMS	CPMAX	CPMIN
220	458	-.169	.111	.291	-.536
220	459	-.119	.111	.348	-.494
220	460	-.199	.104	.159	-.644
220	461	-.197	.131	.244	-1.245
220	462	-.242	.133	.204	-1.033
220	463	-.201	.126	.238	-.754
220	464	-.164	.099	.113	-.475
220	465	-.122	.107	.240	-.492
220	466	-.208	.114	.138	-.576
220	467	-.121	.105	.191	-.476
220	468	-.135	.091	.157	-.427
220	469	-.182	.114	.227	-.538
220	470	-.284	.121	.149	-.668
220	471	-.183	.114	.195	-.552
220	472	-.146	.101	.202	-.477
220	473	-.111	.108	.275	-.461
220	474	-.204	.117	.220	-.583
220	475	-.120	.107	.256	-.456
220	476	-.128	.088	.176	-.431
220	477	-.176	.118	.187	-.825
220	478	-.277	.147	.192	-1.270
220	479	-.127	.105	.256	-.497
220	480	-.127	.089	.164	-.436
220	481	-.109	.100	.205	-.428
220	483	-.117	.102	.210	-.454
220	484	-.118	.086	.132	-.433
220	485	-.018	.110	.383	-.418
220	486	-.178	.105	.127	-.571
220	501	-.119	.089	.187	-.440
220	502	-.102	.098	.220	-.440
220	503	-.139	.097	.189	-.480
220	504	-.109	.100	.213	-.464
220	505	-.119	.086	.182	-.543
220	506	-.099	.094	.231	-.562
220	507	-.141	.097	.198	-.618
220	508	-.107	.096	.234	-.598
220	509	-.122	.091	.192	-.447
220	510	-.102	.102	.228	-.472
220	511	-.143	.104	.195	-.516
220	512	-.108	.104	.240	-.491
220	601	-.112	.106	.274	-.476
220	602	-.129	.094	.281	-.429
220	603	-.117	.090	.145	-.473
220	604	-.178	.116	.309	-.581
220	605	-.191	.135	.284	-.644
220	606	-.126	.109	.221	-.566
220	607	-.112	.117	.278	-.558
220	608	-.100	.139	.394	-.599
220	609	-.111	.120	.277	-.574
220	610	-.124	.096	.220	-.558

WD	TAP	CPMEAN	CPRMS	CPMAX	CPMIN
220	611	-.102	.108	.281	-.599
220	612	-.164	.116	.241	-.662
220	613	-.080	.120	.342	-.613
220	614	-.003	.089	.346	-.351
220	615	.071	.120	.484	-.328
220	701	-.075	.110	.407	-.489
220	702	-.116	.095	.199	-.502
220	703	-.062	.103	.289	-.480
220	704	-.129	.108	.235	-.546
220	705	-.058	.105	.269	-.495
220	706	-.085	.095	.256	-.398
220	707	-.079	.106	.287	-.428
220	708	-.099	.108	.250	-.449
220	709	-.061	.109	.299	-.421
220	710	-.089	.092	.247	-.362
220	711	-.062	.101	.307	-.358
220	712	-.136	.108	.273	-.486
220	801	-.208	.114	.130	-.791
220	802	-.137	.106	.191	-.571
220	803	-.159	.102	.171	-.498
220	804	-.115	.100	.225	-.448
220	805	-.126	.090	.206	-.473
220	806	-.176	.112	.162	-.639
220	807	-.153	.103	.206	-.551
220	808	-.111	.102	.253	-.510
220	809	-.155	.101	.198	-.499
220	810	-.102	.102	.260	-.448
220	811	-.139	.105	.232	-.490
220	812	-.099	.099	.241	-.421
220	813	-.121	.089	.225	-.423
220	814	-.129	.101	.270	-.483
220	815	-.152	.103	.229	-.493
220	816	-.104	.100	.287	-.445
220	817	-.123	.075	.122	-.392
220	818	-.102	.094	.225	-.404
220	819	-.160	.099	.174	-.471
220	820	-.113	.097	.208	-.455
220	821	-.119	.097	.190	-.412
220	822	-.095	.103	.249	-.399
220	823	-.142	.107	.191	-.454
220	901	-.203	.107	.320	-.601
220	902	-.101	.114	.335	-.479
220	903	-.099	.107	.278	-.480
220	904	-.140	.118	.248	-.669
220	905	-.129	.109	.201	-.493
220	906	-.115	.108	.275	-.506
220	907	-.144	.092	.185	-.447
220	908	-.114	.105	.261	-.457
220	909	-.154	.104	.220	-.507
220	910	-.119	.102	.238	-.482

WD	TAP	CPMEAN	CPRMS	CPMAX	CPMIN
220	911	-.130	.090	.174	-.461
220	912	-.092	.102	.234	-.466
220	913	-.140	.101	.189	-.516
220	914	-.103	.099	.222	-.464
220	915	-.116	.103	.269	-.456
230	1	-.266	.126	.176	-.645
230	2	-.245	.111	.105	-.687
230	3	-.312	.165	.161	-1.078
230	4	-.483	.178	.033	-1.426
230	5	-.192	.164	.317	-.994
230	6	-.151	.120	.214	-.629
230	7	-.335	.163	.218	-1.034
230	8	-.458	.150	.023	-1.006
230	9	-.577	.200	.071	-1.511
230	10	-.509	.195	.113	-1.497
230	11	-.399	.179	.428	-1.487
230	12	-.380	.170	.097	-2.078
230	13	-.289	.115	.153	-.708
230	14	-.310	.107	.034	-.643
230	15	-.348	.133	.072	-.810
230	16	-.488	.144	-.037	-1.010
230	17	-.320	.121	.098	-.742
230	18	-.348	.110	.068	-.699
230	19	-.318	.129	.166	-.788
230	20	-.213	.162	.479	-.815
230	21	-.345	.126	.085	-.787
230	22	-.351	.114	.022	-.744
230	23	-.207	.131	.204	-.804
230	24	-.273	.120	.138	-.658
230	25	-.237	.114	.212	-.640
230	26	-.240	.098	.076	-.577
230	27	-.217	.112	.144	-.635
230	28	-.350	.128	.066	-.853
230	29	-.258	.120	.209	-.683
230	30	-.252	.108	.094	-.611
230	31	-.285	.127	.189	-.742
230	32	-.307	.135	.106	-.888
230	101	-.229	.115	.136	-.596
230	102	-.287	.133	.101	-.738
230	103	-.285	.129	.080	-.753
230	104	-.291	.126	.067	-.796
230	105	-.235	.119	.108	-.725
230	106	-.297	.128	.122	-.724
230	107	-.302	.127	.102	-.759
230	108	-.275	.130	.112	-.746
230	109	-.233	.115	.143	-.674
230	110	-.276	.130	.156	-.827
230	111	-.282	.128	.149	-.844
230	112	-.281	.128	.177	-.774
230	113	-.280	.098	.031	-.644

APPENDIX A -- PRESSURE DATA: CONFIGURATION A; HOUSTON NATIONAL BANK

WD	TAP	CPMEAN	CPRMS	CPMAX	CPMIN
230	114	-.334	.117	.052	-.767
230	115	-.351	.121	.048	-.848
230	116	-.328	.142	.081	-1.071
230	117	-.205	.104	.159	-.635
230	118	-.222	.120	.179	-.708
230	119	-.260	.119	.168	-.693
230	120	-.247	.117	.217	-.660
230	121	-.218	.102	.115	-.572
230	122	-.229	.119	.159	-.711
230	123	-.227	.120	.214	-.657
230	124	-.255	.129	.152	-.772
230	125	-.291	.111	.054	-.819
230	126	-.330	.127	.079	-.922
230	127	-.277	.115	.092	-.693
230	128	-.269	.112	.090	-.668
230	129	-.202	.096	.162	-.575
230	130	-.191	.107	.195	-.619
230	131	-.202	.113	.207	-.673
230	132	-.360	.137	.100	-.898
230	133	-.310	.119	.080	-.784
230	134	-.236	.117	.222	-.652
230	135	-.252	.118	.225	-.658
230	136	-.223	.115	.270	-.589
230	137	-.152	.095	.154	-.478
230	138	-.172	.112	.179	-.564
230	139	-.182	.114	.149	-.607
230	140	-.169	.112	.148	-.603
230	141	-.147	.093	.150	-.504
230	142	-.232	.114	.152	-.620
230	143	-.221	.110	.182	-.610
230	144	-.194	.107	.165	-.534
230	145	-.184	.091	.080	-.510
230	146	-.194	.108	.127	-.576
230	147	-.207	.108	.107	-.610
230	148	-.200	.107	.129	-.554
230	149	-.174	.079	.115	-.495
230	150	-.178	.104	.228	-.565
230	151	-.254	.114	.214	-.660
230	152	-.226	.111	.265	-.638
230	153	-.206	.096	.128	-.526
230	154	-.187	.105	.187	-.555
230	155	-.202	.098	.119	-.592
230	156	-.220	.107	.158	-.612
230	157	-.202	.090	.166	-.505
230	158	-.211	.104	.220	-.558
230	159	-.241	.110	.135	-.623
230	160	-.224	.108	.139	-.603
230	161	-.177	.093	.128	-.514
230	162	-.157	.104	.202	-.536
230	163	-.177	.111	.181	-.605
230	164	-.221	.114	.113	-.696
230	165	-.216	.096	.112	-.578
230	166	-.173	.108	.171	-.554
230	167	-.174	.107	.165	-.621
230	168	-.165	.105	.170	-.538
230	169	-.157	.085	.157	-.467
230	170	-.142	.098	.186	-.487
230	171	-.148	.098	.179	-.495
230	172	-.133	.098	.197	-.477
230	173	-.139	.085	.124	-.409
230	174	-.156	.100	.171	-.510
230	175	-.165	.101	.168	-.521
230	176	-.146	.097	.167	-.466
230	177	-.207	.092	.074	-.533
230	178	-.151	.101	.176	-.510
230	179	-.178	.105	.166	-.559
230	180	-.149	.102	.188	-.513
230	181	-.221	.101	.106	-.550
230	182	-.170	.097	.198	-.506
230	183	-.181	.107	.192	-.550
230	184	-.151	.104	.211	-.508
230	185	-.197	.098	.109	-.563
230	186	-.141	.107	.207	-.553
230	187	-.176	.111	.177	-.597
230	188	-.148	.109	.180	-.566
230	189	-.202	.097	.133	-.530
230	190	-.145	.109	.242	-.541
230	191	-.175	.107	.198	-.550
230	201	-.285	.136	.174	-.711
230	202	-.305	.114	.170	-.687
230	203	-.197	.126	.277	-.626
230	204	-.484	.217	.311	-1.449
230	205	-.541	.201	.287	-1.454
230	206	-.296	.117	.048	-.710
230	207	-.194	.116	.207	-.620
230	208	-.151	.124	.211	-.675
230	209	-.453	.256	.316	-1.507
230	210	-.642	.236	.162	-1.868
230	211	-.219	.125	.167	-.716
230	212	-.226	.121	.166	-.703
230	213	-.176	.152	.282	-1.082
230	214	-.602	.223	.239	-1.569
230	215	-.552	.229	.419	-1.761
230	216	-.387	.153	.079	-.998
230	217	-.354	.146	.062	-.926
230	218	-.448	.124	-.084	-1.102
230	219	-.363	.128	.044	-.820
230	220	-.341	.123	.090	-.806
230	221	-.254	.117	.132	-.731
230	222	-.250	.149	.159	-1.195
230	223	-.679	.320	.338	-1.864
230	224	-.789	.340	.009	-3.058
230	225	-.143	.138	.313	-.631
230	226	-.171	.128	.268	-.657
230	227	-.331	.141	.130	-.830
230	228	-.388	.134	.099	-.887
230	229	-.289	.123	.158	-.861
230	230	-.317	.116	.104	-.862
230	231	-.256	.238	.280	-1.306
230	232	-.641	.263	.328	-1.583
230	233	-.597	.233	.226	-1.745
230	234	-.209	.096	.143	-.520
230	235	-.115	.108	.288	-.469
230	236	-.115	.149	.536	-.698
230	237	-.385	.135	.038	-.904
230	238	-.243	.100	.048	-.655
230	239	-.167	.111	.178	-.699
230	240	-.163	.120	.229	-.639
230	241	-.170	.118	.332	-.643
230	242	-.234	.167	.210	-1.023
230	243	-.454	.243	.261	-1.642
230	244	-.522	.232	.213	-1.470
230	245	-.351	.123	.117	-.802
230	246	-.235	.082	.009	-.565
230	247	-.203	.100	.182	-.563
230	248	-.265	.116	.216	-.660
230	249	-.231	.112	.231	-.604
230	250	-.243	.118	.225	-.637
230	251	-.203	.106	.143	-.579
230	252	-.222	.107	.126	-.595
230	253	-.138	.104	.239	-.527
230	254	-.158	.096	.167	-.690
230	255	-.130	.147	.272	-1.094
230	256	-.418	.246	.301	-1.779
230	257	-.401	.229	.294	-1.781
230	258	-.257	.100	.111	-.694
230	259	-.217	.110	.284	-.646
230	260	-.273	.120	.174	-1.054
230	261	-.153	.101	.244	-.510
230	262	-.161	.095	.106	-.512
230	263	-.177	.111	.150	-.607
230	264	-.146	.112	.185	-.577
230	265	-.129	.114	.252	-.631
230	266	-.158	.117	.203	-.944
230	267	-.367	.239	.364	-1.693
230	268	-.392	.222	.402	-1.648
230	269	-.162	.105	.262	-.535
230	270	-.165	.089	.151	-.526
230	271	-.136	.106	.266	-.580
230	272	-.135	.100	.216	-.550

APPENDIX A -- PRESSURE DATA: CONFIGURATION A; HOUSTON NATIONAL BANK

WD	TAP	CPMEAN	CPRMS	CPMAX	CPMIN
230	273	-.129	.106	.244	-.558
230	274	-.153	.092	.227	-.482
230	275	-.252	.177	.257	-1.286
230	276	-.289	.174	.201	-1.157
230	277	-.134	.106	.236	-.490
230	278	-.166	.087	.095	-.486
230	279	-.136	.103	.195	-.517
230	280	-.122	.110	.285	-.507
230	281	-.134	.107	.214	-.541
230	282	-.152	.089	.203	-.514
230	283	-.126	.107	.274	-.562
230	284	-.144	.107	.199	-.541
230	285	-.128	.106	.292	-.510
230	286	-.127	.094	.164	-.493
230	287	-.067	.145	.468	-.592
230	288	-.082	.150	.464	-.565
230	301	.213	.179	.910	-.405
230	302	.425	.206	1.133	-.358
230	303	.451	.230	1.241	-.342
230	304	.422	.230	1.167	-.567
230	305	.179	.183	.993	-.503
230	306	.288	.176	1.112	-.287
230	307	.413	.220	1.198	-.242
230	308	-.000	.150	.611	-.454
230	309	.200	.217	.926	-.587
230	310	.203	.165	.792	-.418
230	311	.385	.213	1.097	-.296
230	312	.476	.218	1.232	-.233
230	313	.438	.204	1.083	-.235
230	314	.272	.169	1.019	-.263
230	315	.077	.159	.714	-.431
230	316	-.050	.146	.567	-.559
230	317	.164	.184	1.153	-.403
230	318	.340	.181	1.069	-.178
230	319	.441	.221	1.187	-.171
230	320	.387	.210	1.075	-.222
230	321	.304	.192	.940	-.264
230	322	.075	.147	.661	-.406
230	323	-.054	.117	.353	-.524
230	324	.151	.183	.768	-.518
230	325	.267	.193	.903	-.348
230	326	.233	.156	.855	-.261
230	327	.218	.172	.893	-.320
230	328	.126	.156	.695	-.384
230	329	-.031	.132	.424	-.493
230	330	-.162	.106	.348	-.524
230	331	.130	.167	.787	-.445
230	332	.204	.175	.938	-.361
230	333	.229	.178	1.130	-.330
230	334	.096	.130	.640	-.271

WD	TAP	CPMEAN	CPRMS	CPMAX	CPMIN
230	335	.038	.132	.548	-.386
230	336	-.122	.118	.342	-.562
230	337	-.199	.120	.219	-.655
230	338	.036	.128	.633	-.384
230	339	.123	.162	.910	-.346
230	340	.111	.162	1.015	-.343
230	341	.072	.142	.833	-.360
230	342	-.044	.100	.284	-.406
230	343	-.144	.118	.200	-.675
230	344	-.231	.123	.139	-.830
230	345	.016	.126	.495	-.383
230	346	.020	.108	.462	-.330
230	347	.053	.129	.657	-.406
230	348	.004	.125	.516	-.433
230	349	-.038	.118	.361	-.470
230	350	-.219	.110	.145	-.618
230	351	-.218	.117	.137	-.606
230	352	-.130	.095	.291	-.485
230	353	-.157	.115	.228	-.567
230	354	-.128	.110	.223	-.576
230	355	-.050	.112	.320	-.490
230	356	-.035	.125	.411	-.499
230	357	.018	.124	.474	-.410
230	358	-.028	.118	.446	-.452
230	359	.036	.120	.491	-.391
230	360	-.018	.118	.430	-.456
230	361	-.014	.112	.418	-.436
230	362	-.098	.106	.263	-.441
230	401	-.390	.183	.098	-1.365
230	402	-.448	.192	.076	-1.486
230	403	-.344	.172	.207	-1.306
230	404	-.446	.164	.130	-1.045
230	405	-.342	.171	.240	-1.104
230	406	-.396	.158	.066	-1.291
230	407	-.365	.159	.108	-1.265
230	408	-.444	.137	.029	-1.005
230	409	-.351	.153	.094	-1.138
230	410	-.409	.170	.066	-1.296
230	411	-.398	.161	.046	-1.040
230	412	-.449	.151	.059	-1.048
230	413	-.307	.135	.146	-.934
230	414	-.325	.146	.077	-.945
230	415	-.356	.171	.099	-1.390
230	416	-.417	.131	-.018	-1.023
230	417	-.400	.132	-.004	-.955
230	418	-.398	.146	.049	-1.007
230	419	-.397	.163	.059	-1.149
230	420	-.482	.170	.063	-1.443
230	421	-.262	.124	.143	-.715
230	422	-.364	.139	.065	-.877

WD	TAP	CPMEAN	CPRMS	CPMAX	CPMIN
230	423	-.349	.147	.078	-.947
230	424	-.326	.134	.077	-.874
230	425	-.276	.119	.088	-.648
230	426	-.287	.105	.051	-.656
230	427	-.307	.127	.122	-.711
230	428	-.441	.144	-.008	-1.369
230	429	-.343	.164	.129	-1.432
230	430	-.314	.126	.150	-.714
230	431	-.320	.129	.122	-.766
230	432	-.462	.144	-.062	-.978
230	433	-.362	.151	.066	-1.014
230	434	-.344	.137	.077	-.823
230	435	-.341	.140	.059	-.889
230	436	-.465	.138	.048	-1.020
230	437	-.362	.144	.151	-.964
230	438	-.324	.132	.150	-.966
230	439	-.292	.127	.166	-.918
230	440	-.424	.125	-.001	-.885
230	441	-.329	.132	.082	-.900
230	442	-.378	.131	.048	-.886
230	443	-.372	.142	.082	-.906
230	444	-.473	.146	.022	-1.025
230	445	-.206	.113	.190	-.604
230	446	-.269	.121	.153	-.705
230	447	-.236	.119	.155	-.638
230	448	-.445	.125	.002	-.892
230	449	-.293	.120	.164	-.827
230	450	-.406	.134	.062	-.883
230	451	-.385	.134	.059	-.871
230	452	-.462	.139	.041	-1.094
230	453	-.329	.155	.181	-.933
230	454	-.393	.172	.102	-1.192
230	455	-.240	.124	.138	-.687
230	456	-.329	.121	.090	-.783
230	457	-.233	.131	.246	-.717
230	458	-.289	.129	.131	-.719
230	459	-.202	.136	.477	-.727
230	460	-.313	.135	.243	-.857
230	461	-.344	.142	.094	-.814
230	462	-.400	.144	.031	-.883
230	463	-.390	.148	.021	-.941
230	464	-.433	.140	.036	-.999
230	465	-.326	.145	.199	-.850
230	466	-.359	.144	.219	-.926
230	467	-.224	.124	.212	-.661
230	468	-.208	.102	.186	-.547
230	469	-.387	.161	.081	-1.248
230	470	-.537	.175	-.042	-1.494
230	471	-.445	.175	.083	-1.412
230	472	-.307	.136	.189	-.752

APPENDIX A -- PRESSURE DATA: CONFIGURATION A: HOUSTON NATIONAL BANK

WD	TAP	CPMEAN	CPRMS	CPMAX	CPMIN
230	473	-.165	.126	.287	-.566
230	474	-.259	.127	.200	-.670
230	475	-.162	.110	.228	-.571
230	476	-.167	.091	.141	-.481
230	477	-.474	.210	.084	-1.471
230	478	-.606	.217	.017	-1.697
230	479	-.275	.134	.202	-.870
230	480	-.209	.114	.189	-.628
230	481	-.154	.121	.265	-.553
230	483	-.146	.121	.311	-.581
230	484	-.163	.096	.138	-.479
230	485	-.006	.114	.382	-.399
230	486	-.230	.120	.179	-.619
230	501	-.157	.093	.186	-.526
230	502	-.136	.102	.241	-.541
230	503	-.181	.102	.182	-.598
230	504	-.145	.105	.245	-.544
230	505	-.156	.094	.143	-.575
230	506	-.129	.101	.187	-.574
230	507	-.186	.107	.176	-.657
230	508	-.135	.104	.214	-.616
230	509	-.153	.089	.172	-.524
230	510	-.132	.099	.206	-.578
230	511	-.190	.102	.178	-.633
230	512	-.138	.101	.254	-.582
230	601	-.147	.106	.239	-.511
230	602	-.166	.096	.175	-.512
230	603	-.191	.100	.137	-.548
230	604	-.351	.135	.059	-.888
230	605	-.101	.176	.654	-.818
230	606	-.160	.082	.152	-.470
230	607	-.172	.101	.145	-.513
230	608	-.067	.164	.590	-.864
230	609	-.138	.093	.210	-.476
230	610	-.163	.091	.172	-.470
230	611	-.161	.107	.203	-.520
230	612	-.342	.139	.117	-.917
230	613	-.073	.144	.365	-.801
230	614	-.038	.101	.294	-.384
230	615	.052	.117	.440	-.399
230	701	-.054	.121	.475	-1.008
230	702	-.163	.105	.242	-.552
230	703	.007	.116	.480	-.456
230	704	-.180	.114	.241	-.610
230	705	.021	.119	.442	-.413
230	706	-.089	.092	.262	-.380
230	707	-.118	.103	.271	-.463
230	708	-.082	.107	.351	-.432
230	709	-.037	.106	.362	-.387
230	710	-.081	.092	.228	-.432

WD	TAP	CPMEAN	CPRMS	CPMAX	CPMIN
230	711	-.056	.098	.303	-.420
230	712	-.182	.105	.207	-.577
230	801	-.366	.143	.091	-1.238
230	802	-.243	.124	.178	-.775
230	803	-.227	.115	.184	-.718
230	804	-.142	.105	.255	-.625
230	805	-.151	.095	.211	-.481
230	806	-.266	.122	.246	-.778
230	807	-.185	.113	.243	-.591
230	808	-.128	.106	.268	-.494
230	809	-.241	.099	.059	-.628
230	810	-.173	.107	.191	-.523
230	811	-.180	.104	.173	-.561
230	812	-.113	.094	.192	-.410
230	813	-.150	.091	.182	-.471
230	814	-.173	.105	.175	-.547
230	815	-.236	.114	.164	-.616
230	816	-.125	.103	.240	-.467
230	817	-.138	.082	.130	-.428
230	818	-.115	.099	.230	-.478
230	819	-.209	.108	.161	-.562
230	820	-.166	.108	.195	-.542
230	821	-.140	.089	.294	-.504
230	822	-.107	.093	.327	-.498
230	823	-.181	.099	.210	-.610
230	901	-.287	.119	.104	-.722
230	902	-.114	.167	.644	-.839
230	903	-.115	.148	.463	-.745
230	904	-.343	.158	.203	-1.089
230	905	-.148	.119	.407	-.553
230	906	-.187	.119	.240	-.573
230	907	-.188	.094	.124	-.578
230	908	-.193	.114	.248	-.577
230	909	-.231	.111	.169	-.632
230	910	-.153	.102	.208	-.511
230	911	-.203	.091	.121	-.510
230	912	-.128	.098	.253	-.504
230	913	-.183	.100	.140	-.580
230	914	-.147	.096	.230	-.501
230	915	-.155	.114	.208	-.532
240	1	-.286	.109	.119	-.698
240	2	-.283	.102	.030	-.656
240	3	-.322	.129	.058	-.948
240	4	-.479	.137	-.014	-1.047
240	5	-.091	.138	.398	-.825
240	6	-.112	.114	.234	-.655
240	7	-.319	.127	.108	-.909
240	8	-.467	.131	-.015	-.917
240	9	-.373	.199	.255	-1.165
240	10	-.359	.199	.314	-1.148

WD	TAP	CPMEAN	CPRMS	CPMAX	CPMIN
240	11	-.332	.140	.211	-.918
240	12	-.335	.120	.026	-.886
240	13	-.332	.132	.159	-.849
240	14	-.363	.114	-.020	-.771
240	15	-.372	.132	.049	-.852
240	16	-.543	.150	-.055	-1.144
240	17	-.361	.128	.043	-.815
240	18	-.400	.106	-.067	-.791
240	19	-.350	.125	.152	-.851
240	20	-.208	.172	.503	-.721
240	21	-.375	.122	.013	-.855
240	22	-.396	.116	-.050	-.872
240	23	-.220	.145	.229	-.793
240	24	-.312	.126	.165	-.704
240	25	-.305	.118	.140	-.722
240	26	-.313	.095	-.017	-.627
240	27	-.272	.114	.067	-.898
240	28	-.418	.132	-.020	-1.226
240	29	-.322	.109	.006	-.754
240	30	-.339	.103	.025	-.645
240	31	-.331	.124	.075	-.937
240	32	-.348	.127	.080	-.971
240	101	-.323	.115	.011	-.735
240	102	-.311	.126	.054	-.802
240	103	-.318	.126	.081	-.785
240	104	-.317	.123	.055	-.786
240	105	-.298	.108	.115	-.733
240	106	-.282	.116	.130	-.721
240	107	-.298	.116	.191	-.759
240	108	-.272	.115	.250	-.706
240	109	-.343	.107	.118	-.658
240	110	-.308	.118	.178	-.729
240	111	-.318	.119	.173	-.750
240	112	-.322	.115	.154	-.712
240	113	-.396	.112	.006	-.864
240	114	-.364	.124	.068	-.865
240	115	-.378	.128	.053	-.873
240	116	-.366	.148	.078	-1.222
240	117	-.333	.103	.002	-.667
240	118	-.268	.117	.123	-.625
240	119	-.305	.118	.060	-.718
240	120	-.295	.116	.049	-.702
240	121	-.353	.110	.054	-.777
240	122	-.285	.127	.256	-.798
240	123	-.276	.131	.259	-.874
240	124	-.295	.125	.163	-.794
240	125	-.416	.116	-.069	-.803
240	126	-.372	.126	.010	-.813
240	127	-.339	.120	.041	-.766
240	128	-.329	.117	.041	-.751

APPENDIX A -- PRESSURE DATA: CONFIGURATION A: HOUSTON NATIONAL BANK

WD	TAP	CPMEAN	CPRMS	CPMAX	CPMIN
240	129	-.303	.100	.077	-.622
240	130	-.225	.110	.193	-.602
240	131	-.226	.115	.201	-.668
240	132	-.396	.135	.061	-.960
240	133	-.425	.122	-.019	-.899
240	134	-.291	.119	.088	-.721
240	135	-.305	.120	.059	-.711
240	136	-.276	.116	.084	-.658
240	137	-.280	.109	.087	-.705
240	138	-.239	.122	.178	-.755
240	139	-.245	.124	.187	-.747
240	140	-.231	.123	.182	-.709
240	141	-.251	.105	.063	-.639
240	142	-.280	.121	.106	-.789
240	143	-.265	.121	.176	-.816
240	144	-.244	.116	.200	-.727
240	145	-.304	.104	-.014	-.634
240	146	-.252	.117	.129	-.620
240	147	-.262	.118	.121	-.652
240	148	-.255	.119	.118	-.705
240	149	-.298	.094	.035	-1.040
240	150	-.246	.118	.143	-.978
240	151	-.324	.121	.179	-.908
240	152	-.295	.115	.164	-.821
240	153	-.319	.104	.005	-.801
240	154	-.233	.115	.095	-.727
240	155	-.248	.111	.075	-.787
240	156	-.267	.119	.076	-.861
240	157	-.294	.106	.003	-.702
240	158	-.252	.116	.069	-.701
240	159	-.279	.112	.081	-.696
240	160	-.273	.110	.061	-.688
240	161	-.304	.112	.060	-.681
240	162	-.211	.121	.179	-.651
240	163	-.245	.147	.203	-1.000
240	164	-.295	.140	.148	-.853
240	165	-.312	.108	.068	-.760
240	166	-.249	.118	.176	-.770
240	167	-.249	.117	.135	-.750
240	168	-.230	.114	.168	-.725
240	169	-.249	.099	.102	-.612
240	170	-.188	.111	.175	-.587
240	171	-.188	.112	.173	-.581
240	172	-.169	.110	.174	-.559
240	173	-.212	.096	.123	-.555
240	174	-.191	.109	.155	-.568
240	175	-.195	.109	.204	-.540
240	176	-.181	.108	.194	-.513
240	177	-.241	.091	.046	-.531
240	178	-.192	.101	.134	-.504
240	179	-.216	.105	.105	-.535
240	180	-.188	.102	.119	-.515
240	181	-.252	.098	.044	-.868
240	182	-.233	.102	.112	-.642
240	183	-.222	.107	.116	-.686
240	184	-.198	.106	.122	-.678
240	185	-.237	.099	.120	-.626
240	186	-.187	.109	.197	-.582
240	187	-.222	.114	.165	-.604
240	188	-.197	.113	.196	-.625
240	189	-.243	.096	.158	-.599
240	190	-.188	.109	.266	-.565
240	191	-.215	.106	.204	-.592
240	201	-.299	.119	.153	-.726
240	202	-.339	.113	.009	-.755
240	203	-.221	.131	.189	-.678
240	204	-.318	.248	.472	-1.064
240	205	-.421	.193	.422	-1.054
240	206	-.296	.099	.020	-.650
240	207	-.186	.105	.186	-.533
240	208	-.083	.130	.370	-.646
240	209	-.241	.286	.462	-1.112
240	210	-.430	.284	.381	-1.448
240	211	-.243	.116	.179	-.701
240	212	-.224	.112	.167	-.650
240	213	-.094	.135	.324	-.957
240	214	-.363	.253	.389	-1.318
240	215	-.368	.258	.571	-1.433
240	216	-.406	.141	.032	-.973
240	217	-.386	.135	.036	-.920
240	218	-.415	.106	-.095	-.777
240	219	-.344	.117	.054	-.741
240	220	-.305	.112	.086	-.664
240	221	-.215	.108	.156	-.619
240	222	-.136	.135	.245	-.771
240	223	-.358	.313	.522	-1.830
240	224	-.472	.322	.459	-2.362
240	225	-.116	.144	.380	-.638
240	226	-.103	.138	.409	-.564
240	227	-.318	.144	.327	-.752
240	228	-.380	.123	.051	-.857
240	229	-.274	.113	.150	-.643
240	230	-.288	.102	.048	-.629
240	231	-.088	.158	.323	-1.003
240	232	-.375	.312	.720	-1.494
240	233	-.373	.274	.891	-1.389
240	234	-.221	.095	.096	-.507
240	235	-.121	.108	.237	-.458
240	236	-.061	.162	.609	-.511
240	237	-.405	.121	.030	-.867
240	238	-.266	.102	.067	-.657
240	239	-.185	.113	.214	-.691
240	240	-.147	.120	.303	-.555
240	241	-.137	.114	.300	-.503
240	242	-.114	.122	.232	-.889
240	243	-.278	.278	.481	-1.734
240	244	-.327	.249	.487	-1.560
240	245	-.426	.132	.007	-.836
240	246	-.298	.092	.004	-.586
240	247	-.285	.109	.160	-.628
240	248	-.338	.123	.213	-.817
240	249	-.307	.117	.206	-.672
240	250	-.283	.115	.101	-.677
240	251	-.245	.112	.096	-.588
240	252	-.240	.111	.125	-.578
240	253	-.124	.108	.235	-.432
240	254	-.130	.106	.215	-.451
240	255	-.058	.140	.360	-.821
240	256	-.259	.258	.462	-1.409
240	257	-.267	.239	.511	-1.208
240	258	-.301	.114	.085	-.671
240	259	-.264	.126	.261	-.655
240	260	-.335	.125	.056	-.860
240	261	-.185	.109	.249	-.521
240	262	-.218	.098	.081	-.541
240	263	-.194	.110	.138	-.522
240	264	-.149	.114	.198	-.480
240	265	-.098	.116	.252	-.433
240	266	-.114	.118	.308	-.727
240	267	-.221	.258	.523	-1.778
240	268	-.274	.249	.547	-1.623
240	269	-.191	.111	.207	-.536
240	270	-.227	.100	.097	-.658
240	271	-.148	.113	.229	-.651
240	272	-.160	.109	.192	-.647
240	273	-.131	.113	.237	-.641
240	274	-.157	.105	.175	-.545
240	275	-.194	.207	.451	-1.129
240	276	-.257	.208	.506	-1.282
240	277	-.138	.116	.237	-.591
240	278	-.195	.098	.118	-.552
240	279	-.139	.112	.209	-.563
240	280	-.165	.107	.225	-.519
240	281	-.175	.116	.209	-.583
240	282	-.179	.099	.136	-.543
240	283	-.131	.115	.277	-.484
240	284	-.167	.116	.225	-.570
240	285	-.126	.114	.254	-.516
240	286	-.130	.099	.329	-.452
240	287	-.017	.181	.697	-.933

APPENDIX A -- PRESSURE DATA: CONFIGURATION A: HOUSTON NATIONAL BANK

WD	TAP	CPMEAN	CPRMS	CPMAX	CPMIN
240	288	-.053	.194	.659	-.936
240	301	.156	.175	.803	-.465
240	302	.435	.178	.985	-.220
240	303	.411	.196	1.023	-.228
240	304	.438	.202	1.098	-.216
240	305	.127	.160	.705	-.443
240	306	.395	.179	1.089	-.243
240	307	.426	.212	1.238	-.218
240	308	-.053	.149	.477	-.601
240	309	.290	.223	1.152	-.462
240	310	.288	.195	.898	-.334
240	311	.411	.223	1.135	-.261
240	312	.421	.224	1.179	-.314
240	313	.378	.212	1.146	-.330
240	314	.255	.180	.935	-.243
240	315	.035	.169	.635	-.543
240	316	-.124	.153	.491	-.720
240	317	.277	.214	1.004	-.420
240	318	.348	.190	1.008	-.200
240	319	.372	.202	1.240	-.209
240	320	.286	.191	1.217	-.257
240	321	.211	.171	1.048	-.280
240	322	.023	.141	.529	-.379
240	323	-.114	.112	.297	-.555
240	324	.180	.190	1.059	-.442
240	325	.259	.185	1.124	-.347
240	326	.251	.148	.833	-.207
240	327	.213	.159	.821	-.264
240	328	.086	.150	.623	-.375
240	329	-.077	.130	.399	-.488
240	330	-.224	.116	.240	-.695
240	331	.191	.165	.846	-.357
240	332	.216	.167	.872	-.269
240	333	.220	.164	.871	-.310
240	334	.107	.129	.628	-.309
240	335	.041	.131	.509	-.420
240	336	-.167	.118	.212	-.611
240	337	-.237	.115	.123	-.670
240	338	.111	.127	.599	-.259
240	339	.190	.149	.815	-.231
240	340	.145	.154	.824	-.274
240	341	.106	.140	.723	-.273
240	342	-.034	.115	.472	-.418
240	343	-.167	.124	.319	-.584
240	344	-.294	.127	.167	-.722
240	345	.101	.144	.773	-.501
240	346	.106	.129	.594	-.282
240	347	.124	.150	.745	-.328
240	348	.034	.146	.646	-.447
240	349	-.015	.131	.494	-.465
240	350	-.138	.111	.238	-.465
240	351	-.280	.129	.131	-.690
240	352	-.149	.096	.204	-.504
240	353	-.203	.125	.262	-.584
240	354	-.006	.107	.482	-.418
240	355	-.055	.118	.474	-.509
240	356	.017	.148	.546	-.636
240	357	.056	.143	.644	-.480
240	358	.104	.126	.719	-.300
240	359	.038	.138	.768	-.427
240	360	.003	.132	.546	-.470
240	361	-.015	.127	.509	-.458
240	362	.031	.106	.423	-.329
240	401	-.359	.130	.078	-.833
240	402	-.378	.132	.075	-.847
240	403	-.349	.133	.119	-.960
240	404	-.295	.121	.111	-.941
240	405	-.362	.143	.073	-1.165
240	406	-.363	.124	.023	-.901
240	407	-.356	.127	.054	-.963
240	408	-.279	.111	.103	-.609
240	409	-.356	.130	.062	-.836
240	410	-.380	.136	.066	-.876
240	411	-.368	.146	.115	-1.433
240	412	-.299	.130	.120	-.861
240	413	-.340	.131	.091	-.854
240	414	-.326	.122	.076	-1.086
240	415	-.367	.147	.074	-1.130
240	416	-.254	.112	.156	-.592
240	417	-.436	.127	-.002	-.949
240	418	-.350	.128	.094	-.776
240	419	-.359	.139	.112	-.998
240	420	-.316	.125	.076	-1.336
240	421	-.318	.119	.104	-.865
240	422	-.390	.119	-.023	-.893
240	423	-.386	.130	.105	-.936
240	424	-.359	.126	.003	-.852
240	425	-.301	.123	.134	-.742
240	426	-.326	.100	.109	-.723
240	427	-.320	.125	.088	-.808
240	428	-.291	.113	.112	-.757
240	429	-.345	.133	.108	-.998
240	430	-.340	.123	.082	-.778
240	431	-.365	.129	.081	-.842
240	432	-.335	.121	.050	-.885
240	433	-.386	.138	.043	-.974
240	434	-.355	.127	.037	-.796
240	435	-.374	.135	.051	-.802
240	436	-.328	.118	.126	-.782
240	437	-.373	.135	.134	-.993
240	438	-.325	.124	.111	-.821
240	439	-.313	.123	.105	-.980
240	440	-.290	.104	.109	-.700
240	441	-.338	.118	.142	-.852
240	442	-.377	.119	.123	-.824
240	443	-.394	.130	.090	-.890
240	444	-.382	.123	.036	-.911
240	445	-.279	.119	.158	-.718
240	446	-.336	.124	.094	-.771
240	447	-.323	.124	.115	-.842
240	448	-.323	.117	.067	-.779
240	449	-.309	.112	.164	-.708
240	450	-.392	.133	.069	-.945
240	451	-.394	.137	.071	-.912
240	452	-.348	.123	.128	-.759
240	453	-.392	.151	.177	-.944
240	454	-.436	.162	.129	-1.034
240	455	-.289	.126	.172	-.757
240	456	-.288	.106	.064	-.745
240	457	-.317	.128	.110	-.944
240	458	-.326	.122	.224	-.836
240	459	-.295	.140	.268	-.947
240	460	-.319	.129	.246	-.801
240	461	-.386	.132	.057	-.899
240	462	-.410	.128	.026	-.917
240	463	-.426	.130	.009	-.936
240	464	-.439	.122	-.034	-.863
240	465	-.362	.126	.070	-.802
240	466	-.439	.133	.018	-.847
240	467	-.294	.124	.118	-.738
240	468	-.314	.113	.084	-.686
240	469	-.430	.135	.034	-.912
240	470	-.596	.148	-.120	-1.203
240	471	-.489	.142	-.056	-1.099
240	472	-.465	.120	.045	-.891
240	473	-.284	.120	.181	-.657
240	474	-.361	.126	.122	-.779
240	475	-.231	.114	.164	-.812
240	476	-.247	.109	.132	-.656
240	477	-.512	.169	.016	-1.543
240	478	-.631	.202	-.099	-1.822
240	479	-.396	.145	.062	-1.071
240	480	-.316	.106	.084	-.678
240	481	-.219	.108	.132	-.566
240	483	-.208	.109	.128	-.548
240	484	-.237	.094	.103	-.579
240	485	-.008	.114	.427	-.434
240	486	-.281	.115	.106	-.744
240	501	-.229	.104	.074	-.596
240	502	-.195	.112	.162	-.548

APPENDIX A -- PRESSURE DATA: CONFIGURATION A; HOUSTON NATIONAL BANK

WD	TAP	CPMEAN	CPRMS	CPMAX	CPMIN
240	503	-.251	.114	.101	-.626
240	504	-.203	.112	.179	-.604
240	505	-.226	.105	.134	-.614
240	506	-.199	.114	.190	-.633
240	507	-.268	.116	.145	-.664
240	508	-.196	.108	.198	-.545
240	509	-.210	.099	.144	-.559
240	510	-.185	.113	.186	-.655
240	511	-.271	.120	.130	-.850
240	512	-.189	.113	.209	-.747
240	601	-.210	.121	.206	-.685
240	602	-.262	.097	.101	-.591
240	603	-.268	.103	.081	-.660
240	604	-.535	.142	-.034	-1.040
240	605	-.002	.182	.812	-.764
240	606	-.240	.107	.112	-.607
240	607	-.279	.121	.175	-.660
240	608	.038	.196	.944	-.926
240	609	-.211	.117	.183	-.669
240	610	-.246	.092	.063	-.631
240	611	-.266	.115	.107	-.778
240	612	-.519	.141	-.060	-1.076
240	613	.011	.160	.781	-.585
240	614	-.100	.113	.311	-.621
240	615	.053	.126	.530	-.319
240	701	-.061	.160	.431	-1.541
240	702	-.272	.108	.135	-.685
240	703	.012	.128	.467	-.464
240	704	-.297	.119	.108	-.697
240	705	.034	.126	.629	-.422
240	706	-.111	.101	.203	-.553
240	707	-.174	.115	.178	-.616
240	708	-.097	.120	.324	-.610
240	709	-.041	.118	.350	-.548
240	710	-.089	.107	.264	-.503
240	711	-.061	.111	.284	-.494
240	712	-.232	.121	.153	-.673
240	801	-.567	.173	-.143	-1.405
240	802	-.458	.154	.055	-1.086
240	803	-.393	.140	.153	-.956
240	804	-.224	.124	.276	-.675
240	805	-.222	.102	.139	-.581
240	806	-.391	.132	-.001	-.909
240	807	-.298	.135	.203	-.798
240	808	-.183	.113	.240	-.539
240	809	-.390	.126	.008	-.940
240	810	-.291	.149	.213	-.883
240	811	-.240	.122	.162	-.810
240	812	-.160	.113	.232	-.703
240	813	-.216	.105	.129	-.583

WD	TAP	CPMEAN	CPRMS	CPMAX	CPMIN
240	814	-.289	.125	.078	-.813
240	815	-.381	.150	.098	-.963
240	816	-.164	.121	.246	-.587
240	817	-.179	.089	.114	-.473
240	818	-.161	.110	.219	-.573
240	819	-.299	.125	.090	-.766
240	820	-.261	.137	.159	-.899
240	821	-.143	.116	.278	-.566
240	822	-.110	.115	.284	-.534
240	823	-.222	.121	.193	-.674
240	901	-.451	.138	.100	-.905
240	902	-.019	.197	.902	-.927
240	903	-.051	.188	.731	-.801
240	904	-.424	.158	.080	-1.074
240	905	-.209	.169	.361	-.940
240	906	-.322	.120	.076	-.737
240	907	-.300	.121	.319	-.756
240	908	-.304	.129	.149	-.807
240	909	-.354	.127	.098	-.771
240	910	-.236	.130	.178	-.759
240	911	-.305	.101	.069	-.641
240	912	-.199	.114	.211	-.693
240	913	-.251	.116	.227	-.682
240	914	-.229	.112	.183	-.700
240	915	-.220	.109	.127	-.592
250	1	-.284	.105	.103	-.650
250	2	-.307	.097	.028	-.616
250	3	-.348	.115	.028	-.934
250	4	-.527	.125	-.094	-1.261
250	5	-.008	.126	.407	-.466
250	6	-.047	.115	.417	-.449
250	7	-.335	.113	.039	-.705
250	8	-.507	.122	-.104	-.901
250	9	-.155	.191	.437	-.834
250	10	-.180	.190	.538	-.875
250	11	-.349	.110	.030	-.758
250	12	-.359	.122	.029	-.783
250	13	-.362	.109	.036	-.797
250	14	-.379	.104	.000	-.681
250	15	-.383	.120	-.018	-.733
250	16	-.583	.143	-.135	-1.022
250	17	-.374	.117	-.024	-.789
250	18	-.414	.113	-.039	-.791
250	19	-.354	.131	.070	-.777
250	20	-.119	.183	.488	-.687
250	21	-.391	.125	.005	-.886
250	22	-.427	.104	-.090	-.802
250	23	-.162	.136	.335	-.666
250	24	-.334	.120	.079	-.740
250	25	-.345	.112	.044	-.715

WD	TAP	CPMEAN	CPRMS	CPMAX	CPMIN
250	26	-.334	.111	.039	-.704
250	27	-.278	.120	.200	-.710
250	28	-.444	.139	.074	-.928
250	29	-.365	.123	.058	-.791
250	30	-.378	.106	-.069	-.876
250	31	-.344	.127	.075	-.838
250	32	-.403	.133	.044	-.979
250	101	-.295	.099	.072	-.780
250	102	-.354	.115	.040	-.917
250	103	-.357	.114	.062	-.800
250	104	-.363	.113	.090	-.811
250	105	-.287	.100	.048	-.616
250	106	-.339	.117	.075	-.766
250	107	-.360	.120	.034	-.757
250	108	-.342	.118	.046	-.753
250	109	-.290	.104	.028	-.671
250	110	-.333	.121	.057	-.779
250	111	-.341	.122	.079	-.783
250	112	-.348	.122	.052	-.811
250	113	-.343	.101	.025	-.689
250	114	-.395	.117	.014	-.811
250	115	-.411	.120	.008	-.831
250	116	-.439	.153	.062	-1.064
250	117	-.286	.104	.064	-.652
250	118	-.307	.123	.099	-.733
250	119	-.358	.120	.105	-.775
250	120	-.353	.120	.046	-.764
250	121	-.302	.105	.066	-.692
250	122	-.314	.120	.128	-.752
250	123	-.317	.127	.048	-.805
250	124	-.343	.122	.066	-.827
250	125	-.351	.116	-.002	-.744
250	126	-.388	.131	.037	-.875
250	127	-.378	.129	.020	-.839
250	128	-.368	.128	.010	-.819
250	129	-.269	.105	.080	-.616
250	130	-.267	.120	.141	-.730
250	131	-.274	.126	.130	-.746
250	132	-.475	.138	.002	-1.006
250	133	-.385	.115	.006	-.843
250	134	-.325	.119	.105	-.720
250	135	-.343	.118	.051	-.794
250	136	-.313	.116	.076	-.745
250	137	-.229	.095	.197	-.553
250	138	-.260	.112	.200	-.662
250	139	-.270	.114	.207	-.678
250	140	-.256	.114	.229	-.647
250	141	-.216	.101	.165	-.592
250	142	-.322	.117	.161	-.733
250	143	-.303	.119	.139	-.703

APPENDIX A -- PRESSURE DATA: CONFIGURATION A; HOUSTON NATIONAL BANK

WD	TAP	CPMEAN	CPRMS	CPMAX	CPMIN
250	144	-.279	.119	.165	-.755
250	145	-.254	.106	.122	-.669
250	146	-.269	.123	.161	-.837
250	147	-.281	.124	.155	-.851
250	148	-.282	.125	.141	-.772
250	149	-.237	.092	.078	-.520
250	150	-.251	.122	.158	-.669
250	151	-.340	.130	.104	-.747
250	152	-.320	.126	.082	-.728
250	153	-.272	.109	.094	-.656
250	154	-.262	.122	.137	-.685
250	155	-.275	.115	.101	-.740
250	156	-.288	.124	.112	-.798
250	157	-.260	.104	.095	-.625
250	158	-.278	.120	.121	-.688
250	159	-.352	.125	.104	-.826
250	160	-.351	.124	.071	-.864
250	161	-.285	.109	.094	-.796
250	162	-.240	.122	.147	-.802
250	163	-.271	.138	.153	-.981
250	164	-.311	.133	.091	-.884
250	165	-.289	.107	.069	-.765
250	166	-.322	.122	.102	-.733
250	167	-.337	.126	.085	-.781
250	168	-.306	.122	.119	-.747
250	169	-.228	.100	.086	-.568
250	170	-.221	.114	.155	-.595
250	171	-.225	.115	.141	-.617
250	172	-.207	.115	.147	-.613
250	173	-.204	.094	.141	-.523
250	174	-.263	.113	.120	-.650
250	175	-.266	.114	.133	-.651
250	176	-.250	.113	.176	-.650
250	177	-.289	.093	.008	-.674
250	178	-.242	.103	.091	-.676
250	179	-.257	.106	.094	-.713
250	180	-.237	.103	.112	-.691
250	181	-.292	.105	.109	-.794
250	182	-.296	.106	.050	-.781
250	183	-.263	.116	.190	-.745
250	184	-.245	.114	.220	-.733
250	185	-.300	.095	.006	-.674
250	186	-.250	.104	.090	-.639
250	187	-.275	.106	.080	-.618
250	188	-.253	.104	.099	-.587
250	189	-.296	.098	.038	-.645
250	190	-.241	.112	.157	-.663
250	191	-.261	.109	.107	-.668
250	201	-.345	.114	.056	-.770
250	202	-.368	.102	-.026	-.731

WD	TAP	CPMEAN	CPRMS	CPMAX	CPMIN
250	203	-.265	.120	.189	-.783
250	204	.019	.245	.673	-.874
250	205	-.214	.260	.779	-.954
250	206	-.296	.101	.019	-.642
250	207	-.161	.113	.212	-.549
250	208	.046	.135	.512	-.436
250	209	.081	.243	.808	-.960
250	210	-.008	.274	.759	-.951
250	211	-.218	.118	.207	-.596
250	212	-.167	.116	.214	-.517
250	213	.027	.127	.442	-.343
250	214	-.044	.256	.659	-.899
250	215	-.070	.300	.879	-.996
250	216	-.409	.139	.074	-.981
250	217	-.404	.136	.208	-.903
250	218	-.458	.101	-.105	-.772
250	219	-.388	.112	.015	-.728
250	220	-.302	.106	.099	-.616
250	221	-.199	.104	.189	-.510
250	222	-.024	.118	.345	-.482
250	223	-.057	.287	.680	-1.057
250	224	-.148	.290	.700	-1.516
250	225	-.047	.145	.439	-.578
250	226	.020	.153	.529	-.779
250	227	-.295	.208	.612	-.861
250	228	-.418	.123	-.058	-.870
250	229	-.275	.116	.095	-.788
250	230	-.233	.099	.123	-.566
250	231	.034	.130	.541	-.490
250	232	-.050	.287	.769	-1.098
250	233	-.068	.273	.835	-1.160
250	234	-.210	.095	.196	-.534
250	235	-.106	.108	.359	-.484
250	236	.045	.168	.620	-.585
250	237	-.436	.119	-.019	-.811
250	238	-.286	.110	.082	-.671
250	239	-.197	.122	.224	-.640
250	240	-.117	.132	.340	-.593
250	241	-.107	.127	.338	-.558
250	242	.009	.122	.407	-.514
250	243	-.012	.254	.829	-1.145
250	244	-.089	.293	.830	-1.458
250	245	-.445	.124	-.042	-.918
250	246	-.302	.081	-.015	-.554
250	247	-.285	.112	.068	-1.023
250	248	-.328	.122	.067	-.863
250	249	-.303	.117	.074	-.749
250	250	-.293	.118	.089	-.750
250	251	-.257	.107	.126	-.637
250	252	-.231	.107	.157	-.615

WD	TAP	CPMEAN	CPRMS	CPMAX	CPMIN
250	253	-.083	.107	.327	-.458
250	254	-.056	.111	.332	-.400
250	255	.049	.131	.537	-.417
250	256	-.022	.249	.649	-1.003
250	257	-.041	.257	.687	-1.015
250	258	-.328	.107	.055	-.729
250	259	-.295	.117	.125	-.775
250	260	-.334	.116	.021	-.738
250	261	-.206	.106	.129	-.587
250	262	-.211	.094	.120	-.549
250	263	-.159	.105	.202	-.538
250	264	-.116	.110	.232	-.509
250	265	-.030	.109	.322	-.411
250	266	-.019	.106	.374	-.390
250	267	-.019	.220	.686	-.896
250	268	-.096	.228	.722	-.876
250	269	-.224	.108	.144	-.584
250	270	-.246	.097	.122	-.554
250	271	-.125	.110	.241	-.538
250	272	-.148	.109	.208	-.544
250	273	-.091	.111	.248	-.528
250	274	-.108	.092	.208	-.380
250	275	-.058	.172	.433	-1.020
250	276	-.148	.190	.398	-1.026
250	277	-.116	.101	.220	-.455
250	278	-.157	.098	.213	-.478
250	279	-.096	.111	.339	-.454
250	280	-.208	.110	.206	-.610
250	281	-.192	.115	.202	-.592
250	282	-.163	.092	.134	-.515
250	283	-.099	.106	.257	-.478
250	284	-.154	.110	.210	-.542
250	285	-.097	.105	.245	-.482
250	286	-.107	.100	.235	-.453
250	287	.021	.139	.655	-.422
250	288	-.038	.157	.541	-.576
250	301	.050	.147	.504	-.559
250	302	.343	.170	.925	-.187
250	303	.291	.179	1.031	-.254
250	304	.377	.192	.962	-.262
250	305	.023	.143	.695	-.424
250	306	.385	.170	.962	-.233
250	307	.318	.177	1.032	-.272
250	308	-.153	.124	.264	-.541
250	309	.380	.227	1.140	-.266
250	310	.353	.166	.913	-.216
250	311	.415	.187	1.200	-.144
250	312	.334	.187	1.328	-.195
250	313	.281	.172	1.198	-.218
250	314	.175	.139	.615	-.378

APPENDIX A -- PRESSURE DATA: CONFIGURATION A; HOUSTON NATIONAL BANK

WD	TAP	CPMEAN	CPRMS	CPMAX	CPMIN
250	315	-.031	.129	.441	-.481
250	316	-.204	.124	.253	-.628
250	317	.412	.191	1.145	-.147
250	318	.395	.153	.896	-.223
250	319	.368	.158	.912	-.120
250	320	.239	.154	.792	-.245
250	321	.162	.139	.665	-.304
250	322	-.036	.130	.440	-.404
250	323	-.181	.113	.234	-.594
250	324	.322	.198	1.085	-.523
250	325	.379	.192	1.267	-.358
250	326	.282	.171	1.036	-.204
250	327	.219	.168	.936	-.273
250	328	.053	.153	.651	-.410
250	329	-.107	.121	.363	-.469
250	330	-.255	.100	.075	-.581
250	331	.322	.188	.982	-.302
250	332	.288	.193	1.037	-.299
250	333	.244	.169	.871	-.345
250	334	.119	.132	.612	-.236
250	335	.044	.129	.488	-.335
250	336	-.200	.114	.277	-.574
250	337	-.250	.107	.133	-.633
250	338	.177	.156	.908	-.255
250	339	.225	.173	1.007	-.280
250	340	.113	.168	.756	-.386
250	341	.076	.150	.643	-.342
250	342	-.056	.115	.335	-.448
250	343	-.190	.117	.233	-.601
250	344	-.348	.123	.072	-.776
250	345	.168	.152	.736	-.317
250	346	.102	.122	.582	-.307
250	347	.092	.132	.610	-.377
250	348	-.031	.131	.415	-.517
250	349	-.059	.119	.364	-.465
250	350	-.198	.104	.108	-.591
250	351	-.296	.114	.048	-.674
250	352	-.171	.100	.222	-.482
250	353	-.218	.117	.165	-.633
250	354	-.070	.112	.356	-.459
250	355	-.073	.121	.375	-.484
250	356	.050	.165	.636	-1.055
250	357	.075	.153	.647	-.489
250	358	.045	.118	.518	-.370
250	359	.022	.124	.467	-.430
250	360	-.026	.120	.434	-.480
250	361	-.043	.115	.352	-.470
250	362	-.039	.110	.387	-.432
250	401	-.367	.114	.032	-.768
250	402	-.391	.117	.018	-.809
250	403	-.368	.118	.012	-.809
250	404	-.371	.110	-.040	-.760
250	405	-.365	.123	.029	-.940
250	406	-.373	.119	.056	-.788
250	407	-.361	.120	.068	-.780
250	408	-.370	.113	.081	-.749
250	409	-.375	.126	.110	-.805
250	410	-.400	.130	.087	-.824
250	411	-.371	.130	.161	-.877
250	412	-.379	.106	-.023	-.816
250	413	-.370	.113	.037	-.734
250	414	-.366	.114	.008	-.754
250	415	-.400	.123	.032	-.867
250	416	-.354	.103	.017	-.729
250	417	-.503	.127	-.112	-.966
250	418	-.381	.114	.029	-.844
250	419	-.386	.118	.030	-.873
250	420	-.400	.111	-.020	-.874
250	421	-.329	.115	.034	-.724
250	422	-.398	.118	-.003	-.838
250	423	-.390	.125	.029	-.917
250	424	-.402	.125	-.017	-.953
250	425	-.348	.114	.085	-.726
250	426	-.368	.111	.019	-.781
250	427	-.364	.114	.049	-.760
250	428	-.399	.103	-.043	-.813
250	429	-.385	.116	-.004	-.873
250	430	-.385	.115	-.009	-.841
250	431	-.400	.119	.009	-.830
250	432	-.425	.115	-.064	-.824
250	433	-.412	.127	-.019	-.910
250	434	-.401	.121	-.030	-.757
250	435	-.401	.127	-.011	-.797
250	436	-.425	.119	.002	-.830
250	437	-.402	.129	.045	-.832
250	438	-.368	.126	.062	-.820
250	439	-.356	.123	.068	-.797
250	440	-.386	.107	-.004	-.772
250	441	-.373	.117	.048	-.757
250	442	-.413	.122	.030	-.847
250	443	-.417	.128	.021	-.891
250	444	-.436	.114	.002	-.824
250	445	-.298	.116	.071	-.693
250	446	-.358	.125	.038	-.777
250	447	-.344	.123	.033	-.812
250	448	-.384	.111	.002	-.738
250	449	-.315	.117	.066	-.707
250	450	-.392	.123	.032	-.838
250	451	-.391	.124	.046	-.809
250	452	-.414	.109	-.062	-.819
250	453	-.414	.133	.034	-.996
250	454	-.443	.133	.011	-.973
250	455	-.365	.129	.027	-1.050
250	456	-.411	.113	-.023	-.810
250	457	-.384	.132	.081	-.957
250	458	-.389	.127	.058	-.780
250	459	-.403	.133	.074	-.898
250	460	-.437	.122	-.056	-1.233
250	461	-.401	.130	.068	-.896
250	462	-.423	.128	.041	-.937
250	463	-.433	.129	.006	-.992
250	464	-.478	.121	-.087	-.865
250	465	-.409	.127	-.020	-.794
250	466	-.537	.139	.011	-.982
250	467	-.387	.131	.067	-.892
250	468	-.423	.112	-.034	-.839
250	469	-.461	.129	-.075	-.978
250	470	-.649	.144	-.218	-1.248
250	471	-.507	.134	-.103	-1.008
250	472	-.504	.122	-.139	-1.004
250	473	-.369	.123	.097	-.814
250	474	-.474	.134	.031	-.908
250	475	-.320	.129	.178	-.854
250	476	-.365	.111	-.014	-.755
250	477	-.450	.134	-.018	-.979
250	478	-.641	.149	-.168	-1.262
250	479	-.459	.124	-.064	-.914
250	480	-.406	.116	-.071	-.842
250	481	-.289	.121	.042	-.758
250	483	-.275	.119	.102	-.724
250	484	-.301	.101	.023	-.662
250	485	-.028	.114	.380	-.388
250	486	-.350	.122	.026	-.787
250	501	-.281	.111	.101	-.753
250	502	-.250	.122	.161	-.712
250	503	-.311	.124	.075	-.775
250	504	-.255	.117	.159	-.711
250	505	-.277	.111	.085	-.682
250	506	-.253	.125	.144	-.708
250	507	-.331	.122	.041	-.825
250	508	-.255	.113	.107	-.720
250	509	-.270	.101	.039	-.634
250	510	-.224	.114	.217	-.636
250	511	-.325	.128	.136	-.811
250	512	-.240	.113	.138	-.674
250	601	-.275	.118	.182	-.651
250	602	-.326	.106	.029	-.719
250	603	-.359	.120	.072	-.791
250	604	-.551	.146	-.047	-1.224
250	605	.105	.206	.863	-.807

APPENDIX A -- PRESSURE DATA: CONFIGURATION A; HOUSTON NATIONAL BANK

WD	TAP	CPMEAN	CPRMS	CPMAX	CPMIN
250	606	-.319	.103	-.012	-.698
250	607	-.338	.114	.046	-.725
250	608	.055	.188	.707	-.931
250	609	-.285	.115	.061	-.704
250	610	-.320	.097	.014	-.602
250	611	-.339	.115	.026	-.715
250	612	-.567	.146	-.111	-1.128
250	613	.078	.166	1.036	-.471
250	614	-.185	.113	.226	-.577
250	615	.041	.117	.523	-.361
250	701	-.141	.186	.484	-1.198
250	702	-.343	.106	.021	-.755
250	703	-.009	.135	.497	-.605
250	704	-.389	.118	.027	-.804
250	705	.034	.128	.501	-.451
250	706	-.156	.105	.208	-.517
250	707	-.260	.118	.135	-.866
250	708	-.128	.122	.333	-.627
250	709	-.058	.120	.343	-.543
250	710	-.117	.100	.189	-.432
250	711	-.094	.105	.220	-.450
250	712	-.297	.115	.060	-.646
250	801	-.564	.151	-.116	-1.231
250	802	-.518	.164	-.014	-1.351
250	803	-.479	.148	-.020	-1.000
250	804	-.318	.131	.184	-.849
250	805	-.294	.109	.094	-.664
250	806	-.474	.147	-.012	-1.093
250	807	-.399	.141	.200	-.868
250	808	-.243	.124	.196	-.760
250	809	-.481	.130	.042	-1.135
250	810	-.416	.153	.110	-1.032
250	811	-.320	.143	.125	-.958
250	812	-.274	.144	.171	-.957
250	813	-.280	.128	.150	-.827
250	814	-.360	.132	.026	-.902
250	815	-.509	.174	.012	-1.123
250	816	-.178	.122	.256	-.663
250	817	-.227	.098	.129	-.550
250	818	-.188	.115	.194	-.541
250	819	-.359	.128	.091	-.827
250	820	-.358	.149	.322	-.919
250	821	-.129	.122	.292	-.548
250	822	-.103	.114	.256	-.509
250	823	-.256	.122	.107	-.651
250	901	-.579	.154	-.108	-1.333
250	902	.033	.204	.877	-.769
250	903	.039	.190	.697	-.794
250	904	-.453	.152	.069	-1.104
250	905	-.371	.212	.370	-1.365

WD	TAP	CPMEAN	CPRMS	CPMAX	CPMIN
250	906	-.404	.130	.050	-.951
250	907	-.401	.130	.006	-.881
250	908	-.372	.131	.099	-.899
250	909	-.429	.126	-.002	-.905
250	910	-.348	.144	.065	-.824
250	911	-.352	.108	-.010	-.799
250	912	-.247	.114	.149	-.763
250	913	-.314	.130	.060	-.892
250	914	-.278	.118	.081	-.821
250	915	-.294	.113	.044	-.686
260	1	-.253	.105	.061	-.606
260	2	-.232	.098	.111	-.578
260	3	-.387	.122	.006	-.927
260	4	-.413	.121	-.011	-.835
260	5	.071	.147	.617	-.383
260	6	.084	.120	.529	-.303
260	7	-.371	.115	.049	-.818
260	8	-.394	.112	-.003	-.816
260	9	.088	.189	.737	-.613
260	10	.098	.183	.727	-.572
260	11	-.363	.118	.033	-.785
260	12	-.384	.122	.143	-.760
260	13	-.365	.114	.091	-.740
260	14	-.323	.091	.002	-.616
260	15	-.415	.120	.084	-.911
260	16	-.440	.133	.168	-1.023
260	17	-.392	.109	-.039	-.768
260	18	-.334	.100	.008	-.698
260	19	-.275	.176	.408	-.845
260	20	.089	.172	.740	-.540
260	21	-.392	.120	.006	-.795
260	22	-.347	.099	.008	-.753
260	23	-.122	.130	.339	-.546
260	24	-.233	.112	.158	-.589
260	25	-.359	.113	.037	-.772
260	26	-.289	.098	.113	-.644
260	27	-.320	.116	.095	-.758
260	28	-.342	.123	.058	-.799
260	29	-.392	.117	.032	-.830
260	30	-.330	.095	.070	-.633
260	31	-.405	.133	.028	-1.033
260	32	-.259	.129	.213	-.730
260	101	-.343	.105	.021	-.712
260	102	-.347	.117	.062	-.777
260	103	-.351	.118	.043	-.789
260	104	-.348	.116	.041	-.776
260	105	-.361	.102	-.002	-.783
260	106	-.348	.113	.039	-.791
260	107	-.355	.114	.048	-.814
260	108	-.338	.114	.053	-.808

WD	TAP	CPMEAN	CPRMS	CPMAX	CPMIN
260	109	-.349	.099	-.055	-.693
260	110	-.336	.110	.027	-.709
260	111	-.339	.112	.014	-.730
260	112	-.332	.112	.008	-.702
260	113	-.384	.109	-.029	-.760
260	114	-.363	.122	-.000	-.785
260	115	-.370	.125	.018	-.800
260	116	-.439	.157	.041	-.989
260	117	-.367	.092	-.090	-.661
260	118	-.337	.109	.022	-.692
260	119	-.375	.111	.040	-.723
260	120	-.360	.109	.047	-.702
260	121	-.365	.100	-.016	-.741
260	122	-.331	.114	.063	-.782
260	123	-.354	.125	.049	-.802
260	124	-.310	.119	.098	-.734
260	125	-.416	.115	-.058	-.787
260	126	-.375	.127	.001	-.794
260	127	-.372	.116	.117	-.861
260	128	-.359	.115	.130	-.757
260	129	-.349	.105	.040	-.723
260	130	-.296	.115	.066	-.677
260	131	-.291	.119	.075	-.703
260	132	-.465	.139	-.019	-1.011
260	133	-.443	.121	.009	-.837
260	134	-.314	.115	.057	-.696
260	135	-.327	.110	.084	-.736
260	136	-.301	.113	.094	-.703
260	137	-.308	.101	.025	-.693
260	138	-.285	.114	.098	-.744
260	139	-.295	.117	.101	-.766
260	140	-.282	.115	.099	-.746
260	141	-.294	.095	.009	-.593
260	142	-.315	.110	.107	-.669
260	143	-.303	.110	.115	-.618
260	144	-.288	.106	.087	-.630
260	145	-.343	.109	.003	-.771
260	146	-.314	.122	.076	-.826
260	147	-.321	.123	.068	-.766
260	148	-.322	.125	.047	-.768
260	149	-.329	.099	.069	-1.036
260	150	-.301	.121	.199	-.943
260	151	-.370	.122	.083	-.791
260	152	-.349	.121	.096	-.760
260	153	-.343	.098	-.048	-.678
260	154	-.299	.115	.047	-.752
260	155	-.318	.109	.035	-.661
260	156	-.336	.115	.062	-.728
260	157	-.352	.108	-.002	-.742
260	158	-.329	.121	.066	-.788

APPENDIX A -- PRESSURE DATA: CONFIGURATION A; HOUSTON NATIONAL BANK

WD	TAP	CPMEAN	CPRMS	CPMAX	CPMIN
260	159	-.393	.122	.080	-.828
260	160	-.383	.119	.091	-.805
260	161	-.334	.099	.051	-.665
260	162	-.265	.113	.092	-.638
260	163	-.316	.140	.097	-1.025
260	164	-.340	.122	.027	-.856
260	165	-.331	.114	.041	-.667
260	166	-.326	.126	.155	-.693
260	167	-.341	.128	.155	-.697
260	168	-.310	.125	.162	-.659
260	169	-.311	.100	.024	-.653
260	170	-.275	.113	.085	-.663
260	171	-.274	.114	.199	-.670
260	172	-.255	.113	.171	-.637
260	173	-.252	.102	.074	-.567
260	174	-.274	.118	.147	-.658
260	175	-.275	.119	.153	-.664
260	176	-.265	.115	.113	-.654
260	177	-.305	.093	.043	-.611
260	178	-.268	.104	.099	-.601
260	179	-.277	.107	.100	-.615
260	180	-.261	.106	.102	-.590
260	181	-.323	.103	-.016	-.737
260	182	-.272	.098	.021	-.680
260	183	-.301	.115	.059	-.809
260	184	-.287	.113	.063	-.777
260	185	-.329	.103	-.024	-.703
260	186	-.291	.114	.063	-.710
260	187	-.303	.115	.039	-.751
260	188	-.286	.113	.054	-.751
260	189	-.314	.098	-.018	-.638
260	190	-.272	.113	.085	-.662
260	191	-.285	.109	.059	-.654
260	201	-.349	.115	.067	-.771
260	202	-.386	.103	-.066	-.769
260	203	-.284	.133	.199	-.775
260	204	.177	.225	.852	-.929
260	205	.051	.335	.897	-.910
260	206	-.235	.105	.177	-.560
260	207	-.099	.124	.404	-.476
260	208	.153	.153	.677	-.343
260	209	.327	.209	.955	-.512
260	210	.288	.245	.931	-.855
260	211	-.198	.114	.199	-.618
260	212	-.116	.118	.287	-.537
260	213	.117	.147	.630	-.316
260	214	.222	.193	.768	-.631
260	215	.246	.262	.927	-.673
260	216	-.350	.151	.214	-.899
260	217	-.341	.171	.401	-.882
260	218	-.467	.122	-.052	-.914
260	219	-.376	.128	.060	-.849
260	220	-.235	.128	.293	-.688
260	221	-.127	.128	.446	-.573
260	222	.092	.132	.556	-.363
260	223	.220	.234	.893	-.710
260	224	.196	.274	.977	-.763
260	225	-.039	.129	.407	-.567
260	226	.096	.140	.613	-.628
260	227	-.077	.280	.822	-.722
260	228	-.411	.116	.039	-.769
260	229	-.219	.117	.177	-.621
260	230	-.160	.112	.327	-.457
260	231	.130	.148	.721	-.282
260	232	.213	.255	1.018	-.854
260	233	.207	.277	1.102	-.778
260	234	-.215	.098	.105	-.502
260	235	-.099	.112	.249	-.434
260	236	.121	.170	.780	-.552
260	237	-.452	.129	-.061	-.884
260	238	-.264	.098	.060	-.609
260	239	-.164	.115	.258	-.562
260	240	-.042	.133	.419	-.492
260	241	-.027	.133	.436	-.461
260	242	.105	.122	.484	-.360
260	243	.203	.236	.904	-.952
260	244	.150	.264	.822	-.818
260	245	-.353	.119	.049	-1.013
260	246	-.339	.085	-.075	-.731
260	247	-.336	.105	-.016	-.718
260	248	-.368	.123	.029	-1.116
260	249	-.350	.117	.034	-.922
260	250	-.345	.120	.061	-.794
260	251	-.249	.110	.133	-.685
260	252	-.199	.112	.175	-.624
260	253	-.024	.119	.385	-.409
260	254	.036	.115	.402	-.361
260	255	.154	.137	.646	-.292
260	256	.172	.247	.861	-.854
260	257	.166	.263	.952	-.798
260	258	-.292	.132	.135	-.721
260	259	-.273	.156	.452	-.730
260	260	-.364	.124	.030	-.757
260	261	-.213	.110	.225	-.609
260	262	-.216	.101	.149	-.577
260	263	-.138	.114	.278	-.512
260	264	-.092	.127	.333	-.510
260	265	.031	.126	.488	-.351
260	266	.029	.107	.467	-.261
260	267	.072	.216	.723	-.835
260	268	-.010	.238	.736	-.843
260	269	-.254	.102	.075	-.587
260	270	-.255	.100	.126	-.580
260	271	-.101	.110	.348	-.460
260	272	-.143	.112	.284	-.510
260	273	-.055	.114	.356	-.425
260	274	-.036	.101	.277	-.419
260	275	.043	.187	.591	-1.026
260	276	-.040	.211	.598	-.937
260	277	-.075	.108	.282	-.469
260	278	-.124	.100	.272	-.443
260	279	-.055	.110	.377	-.401
260	280	-.229	.113	.143	-.573
260	281	-.199	.114	.318	-.571
260	282	-.137	.096	.187	-.451
260	283	-.051	.111	.338	-.427
260	284	-.121	.116	.315	-.479
260	285	-.047	.112	.367	-.415
260	286	-.066	.101	.317	-.477
260	287	.059	.154	.659	-.861
260	288	-.029	.180	.635	-1.030
260	301	-.071	.139	.510	-.496
260	302	.262	.181	.927	-.392
260	303	.187	.173	.766	-.323
260	304	.321	.215	1.022	-.552
260	305	-.080	.135	.392	-.536
260	306	.393	.190	.959	-.349
260	307	.234	.167	.793	-.275
260	308	-.266	.127	.205	-.677
260	309	.425	.186	1.113	-.184
260	310	.446	.191	1.100	-.295
260	311	.467	.200	1.187	-.184
260	312	.312	.193	.950	-.247
260	313	.244	.170	.768	-.268
260	314	.058	.127	.462	-.314
260	315	-.114	.115	.313	-.486
260	316	-.303	.117	.128	-.695
260	317	.402	.195	1.021	-.309
260	318	.390	.173	1.100	-.202
260	319	.330	.171	1.016	-.182
260	320	.168	.168	.744	-.333
260	321	.100	.144	.562	-.305
260	322	-.097	.121	.341	-.474
260	323	-.204	.095	.102	-.534
260	324	.299	.203	1.132	-.564
260	325	.346	.186	1.107	-.228
260	326	.272	.158	.804	-.242
260	327	.202	.154	.793	-.308
260	328	-.001	.143	.556	-.487
260	329	-.147	.110	.243	-.569

APPENDIX A -- PRESSURE DATA: CONFIGURATION A: HOUSTON NATIONAL BANK

WD	TAP	CPMEAN	CPRMS	CPMAX	CPMIN
260	330	-.299	.098	.037	-.609
260	331	.297	.188	.939	-.496
260	332	.231	.188	.903	-.588
260	333	.198	.161	.785	-.239
260	334	.096	.134	.511	-.305
260	335	.024	.132	.473	-.372
260	336	-.253	.121	.229	-.659
260	337	-.274	.111	.163	-.681
260	338	.212	.147	.770	-.331
260	339	.255	.159	.801	-.281
260	340	.104	.159	.723	-.434
260	341	.075	.139	.631	-.400
260	342	-.076	.129	.423	-.500
260	343	-.218	.120	.172	-.633
260	344	-.420	.122	-.029	-.817
260	345	.165	.173	.749	-.593
260	346	.138	.139	.725	-.341
260	347	.127	.151	.788	-.331
260	348	-.027	.153	.650	-.510
260	349	-.049	.137	.586	-.488
260	350	-.264	.105	.187	-.631
260	351	-.313	.109	.122	-.690
260	352	-.160	.108	.301	-.505
260	353	-.226	.114	.216	-.620
260	354	-.115	.114	.261	-.512
260	355	-.080	.116	.302	-.477
260	356	.063	.175	.689	-.495
260	357	.095	.170	.837	-.433
260	358	.046	.130	.661	-.386
260	359	.045	.132	.691	-.408
260	360	-.004	.128	.632	-.433
260	361	-.030	.122	.539	-.455
260	362	-.074	.125	.397	-.479
260	401	-.379	.114	.099	-.777
260	402	-.394	.115	.088	-.794
260	403	-.383	.117	.084	-.790
260	404	-.416	.111	-.066	-.819
260	405	-.367	.119	.022	-.878
260	406	-.368	.116	-.034	-.804
260	407	-.357	.116	-.001	-.799
260	408	-.412	.107	-.044	-.770
260	409	-.372	.115	.062	-.876
260	410	-.392	.117	.053	-.864
260	411	-.364	.116	.021	-.757
260	412	-.419	.106	-.046	-.767
260	413	-.369	.111	.035	-.762
260	414	-.395	.119	-.001	-.831
260	415	-.390	.119	.044	-.802
260	416	-.408	.104	-.027	-.794
260	417	-.387	.118	.015	-.784
260	418	-.382	.110	.025	-.783
260	419	-.384	.113	.053	-.827
260	420	-.452	.113	-.087	-.867
260	421	-.341	.112	.036	-.721
260	422	-.384	.115	-.001	-.767
260	423	-.381	.119	.024	-.831
260	424	-.388	.124	.075	-.837
260	425	-.354	.115	.024	-.736
260	426	-.362	.098	-.073	-.674
260	427	-.364	.116	.006	-.743
260	428	-.431	.108	-.024	-.786
260	429	-.385	.115	.050	-.773
260	430	-.368	.115	.028	-.850
260	431	-.374	.119	.068	-.812
260	432	-.439	.112	-.103	-.881
260	433	-.398	.119	-.054	-.919
260	434	-.394	.113	-.050	-.741
260	435	-.393	.118	-.035	-.914
260	436	-.454	.114	-.082	-.862
260	437	-.408	.120	-.008	-.814
260	438	-.372	.115	.032	-.752
260	439	-.362	.113	.035	-.740
260	440	-.440	.102	-.054	-.769
260	441	-.402	.108	.015	-.764
260	442	-.432	.114	-.018	-.860
260	443	-.440	.120	-.044	-.878
260	444	-.469	.113	-.074	-.840
260	445	-.303	.115	.166	-.721
260	446	-.358	.123	.049	-.811
260	447	-.345	.123	.099	-.771
260	448	-.389	.104	-.076	-.772
260	449	-.371	.115	-.034	-.771
260	450	-.370	.110	-.037	-.813
260	451	-.369	.111	-.013	-.778
260	452	-.445	.107	-.095	-.895
260	453	-.423	.125	-.022	-.947
260	454	-.445	.125	-.041	-.929
260	455	-.374	.123	.064	-.883
260	456	-.420	.115	-.009	-.770
260	457	-.376	.128	.102	-.855
260	458	-.386	.121	.034	-.823
260	459	-.396	.124	.015	-.796
260	460	-.462	.113	-.080	-.897
260	461	-.392	.121	-.048	-.857
260	462	-.413	.119	-.068	-.875
260	463	-.422	.120	-.059	-.858
260	464	-.403	.107	-.061	-.768
260	465	-.443	.121	-.034	-.851
260	466	-.426	.118	-.033	-.847
260	467	-.419	.121	-.025	-.906
260	468	-.358	.106	-.018	-.738
260	469	-.483	.129	-.011	-.895
260	470	-.502	.128	-.035	-.938
260	471	-.505	.129	-.054	-.983
260	472	-.438	.108	-.110	-.843
260	473	-.427	.121	-.034	-.842
260	474	-.382	.116	-.015	-.772
260	475	-.350	.121	.049	-.751
260	476	-.307	.118	.093	-.712
260	477	-.519	.141	-.012	-1.094
260	478	-.506	.142	-.058	-1.025
260	479	-.478	.136	-.072	-.986
260	480	-.357	.106	.046	-.776
260	481	-.351	.117	.046	-.842
260	483	-.306	.117	.097	-.742
260	484	-.254	.094	.029	-.651
260	485	-.033	.119	.350	-.445
260	486	-.263	.109	.082	-.638
260	501	-.311	.102	.019	-.755
260	502	-.266	.114	.090	-.887
260	503	-.348	.113	.025	-.839
260	504	-.269	.111	.235	-.755
260	505	-.315	.111	.097	-.735
260	506	-.275	.116	.118	-.691
260	507	-.379	.116	.086	-.762
260	508	-.294	.109	.126	-.682
260	509	-.319	.104	.092	-.730
260	510	-.245	.122	.262	-.712
260	511	-.352	.131	.185	-.900
260	512	-.276	.117	.159	-.721
260	601	-.309	.113	.065	-.788
260	602	-.361	.108	-.026	-.735
260	603	-.433	.121	-.039	-.991
260	604	-.570	.139	-.095	-1.154
260	605	.220	.191	.943	-.363
260	606	-.343	.109	-.015	-.753
260	607	-.370	.120	.006	-.827
260	608	.110	.193	.765	-.842
260	609	-.305	.119	.100	-.828
260	610	-.345	.094	.006	-.726
260	611	-.356	.111	.039	-.760
260	612	-.564	.133	.011	-1.047
260	613	.092	.160	.749	-.615
260	614	-.200	.123	.144	-.661
260	615	.036	.118	.588	-.397
260	701	-.172	.203	.385	-1.403
260	702	-.359	.104	-.004	-.763
260	703	-.018	.145	.525	-.578
260	704	-.408	.119	-.036	-.821
260	705	.032	.133	.493	-.447

APPENDIX A -- PRESSURE DATA: CONFIGURATION A; HOUSTON NATIONAL BANK

WD	TAP	CPMEAN	CPRMS	CPMAX	CPMIN
260	706	-.174	.106	.306	-.591
260	707	-.286	.112	.142	-.737
260	708	-.133	.126	.418	-.607
260	709	-.054	.122	.437	-.551
260	710	-.122	.110	.269	-.625
260	711	-.100	.113	.273	-.671
260	712	-.337	.119	.078	-.858
260	801	-.564	.137	-.172	-1.081
260	802	-.537	.160	-.059	-1.206
260	803	-.505	.143	-.079	-.986
260	804	-.352	.124	.044	-.796
260	805	-.354	.111	-.034	-.752
260	806	-.518	.141	-.113	-1.078
260	807	-.462	.136	.230	-1.141
260	808	-.295	.126	.180	-.752
260	809	-.533	.140	-.070	-1.023
260	810	-.455	.158	.122	-1.099
260	811	-.401	.153	.167	-.972
260	812	-.347	.148	.144	-.981
260	813	-.338	.120	.048	-.805
260	814	-.401	.121	-.030	-.791
260	815	-.549	.157	-.029	-1.278
260	816	-.218	.115	.159	-.568
260	817	-.292	.102	.022	-.625
260	818	-.231	.116	.124	-.575
260	819	-.419	.137	.135	-.952
260	820	-.400	.166	.242	-1.102
260	821	-.143	.115	.352	-.500
260	822	-.104	.107	.284	-.466
260	823	-.275	.111	.091	-.650
260	901	-.574	.145	-.138	-1.179
260	902	.047	.214	.681	-.978
260	903	.044	.189	.699	-.888
260	904	-.428	.126	.043	-.884
260	905	-.426	.175	.464	-1.110
260	906	-.402	.115	.021	-.823
260	907	-.429	.132	.003	-.914
260	908	-.411	.134	.009	-.972
260	909	-.474	.130	-.047	-.964
260	910	-.389	.145	.062	-.922
260	911	-.393	.117	-.025	-.739
260	912	-.280	.119	.189	-.688
260	913	-.379	.143	.139	-.912
260	914	-.310	.123	.153	-.837
260	915	-.323	.115	.044	-.713
270	1	-.200	.116	.208	-.595
270	2	-.261	.101	.122	-.588
270	3	-.394	.117	.031	-.760
270	4	-.417	.117	-.003	-.772
270	5	.167	.162	.738	-.361
270	6	.123	.143	.619	-.340
270	7	-.373	.111	-.022	-.754
270	8	-.391	.109	-.052	-.767
270	9	.197	.195	.935	-.465
270	10	.198	.214	.905	-.348
270	11	-.384	.122	-.032	-.866
270	12	-.375	.115	.075	-.730
270	13	-.380	.120	-.061	-.822
270	14	-.384	.100	-.011	-.741
270	15	-.350	.150	.216	-.896
270	16	-.348	.175	.191	-1.085
270	17	-.387	.114	.013	-.791
270	18	-.411	.101	-.062	-.842
270	19	-.040	.214	.702	-.695
270	20	.161	.170	.765	-.438
270	21	-.420	.119	-.023	-.859
270	22	-.411	.101	-.026	-.756
270	23	-.128	.125	.376	-.520
270	24	-.245	.113	.129	-.599
270	25	-.369	.116	.013	-.723
270	26	-.366	.102	.011	-.746
270	27	-.372	.124	.036	-1.008
270	28	-.392	.136	.053	-1.088
270	29	-.401	.119	-.037	-.831
270	30	-.382	.106	-.041	-.730
270	31	-.444	.146	.029	-.984
270	32	-.170	.145	.376	-.791
270	101	-.360	.095	-.021	-.689
270	102	-.349	.104	.016	-.734
270	103	-.350	.105	.019	-.742
270	104	-.350	.103	.027	-.732
270	105	-.375	.110	-.005	-.737
270	106	-.335	.116	.009	-.766
270	107	-.338	.120	.013	-.799
270	108	-.304	.123	.078	-.776
270	109	-.389	.095	-.067	-.757
270	110	-.361	.105	-.018	-.772
270	111	-.364	.107	-.032	-.765
270	112	-.351	.106	-.030	-.738
270	113	-.365	.108	.031	-.773
270	114	-.285	.117	.140	-.684
270	115	-.274	.121	.158	-.679
270	116	-.339	.123	.020	-.845
270	117	-.354	.091	-.091	-.668
270	118	-.316	.104	.029	-.662
270	119	-.347	.104	-.001	-.696
270	120	-.333	.104	-.004	-.685
270	121	-.347	.098	.004	-.706
270	122	-.317	.109	.154	-.681
270	123	-.332	.114	.153	-.749
270	124	-.167	.132	.316	-.605
270	125	-.448	.122	-.075	-.939
270	126	-.383	.129	.022	-.909
270	127	-.366	.110	.041	-.799
270	128	-.352	.108	.059	-.779
270	129	-.366	.098	.022	-.846
270	130	-.317	.104	.101	-.686
270	131	-.312	.107	.105	-.688
270	132	-.442	.149	.121	-1.082
270	133	-.447	.143	-.055	-1.031
270	134	-.336	.115	.024	-.773
270	135	-.348	.117	.026	-.747
270	136	-.326	.114	.034	-.742
270	137	-.345	.098	.009	-.692
270	138	-.317	.108	.096	-.708
270	139	-.325	.111	.111	-.711
270	140	-.311	.111	.156	-.707
270	141	-.319	.100	.090	-.749
270	142	-.323	.111	.065	-.745
270	143	-.315	.110	.083	-.731
270	144	-.305	.109	.125	-.710
270	145	-.366	.107	.012	-1.154
270	146	-.330	.115	.087	-.988
270	147	-.337	.115	.098	-.934
270	148	-.336	.121	.109	-1.018
270	149	-.358	.094	-.059	-.665
270	150	-.320	.114	.081	-.701
270	151	-.353	.114	.127	-.755
270	152	-.332	.113	.140	-.717
270	153	-.343	.106	-.000	-.704
270	154	-.304	.120	.096	-.692
270	155	-.324	.118	.069	-.804
270	156	-.347	.121	.043	-.783
270	157	-.380	.108	.001	-.819
270	158	-.348	.119	.056	-.832
270	159	-.381	.112	.015	-.730
270	160	-.370	.110	.015	-.730
270	161	-.349	.108	.060	-.862
270	162	-.289	.120	.164	-.748
270	163	-.321	.138	.218	-.908
270	164	-.365	.132	.108	-.915
270	165	-.328	.114	.054	-.720
270	166	-.295	.114	.051	-.665
270	167	-.310	.114	.047	-.663
270	168	-.285	.111	.055	-.636
270	169	-.302	.099	.025	-.678
270	170	-.265	.109	.118	-.692
270	171	-.268	.109	.105	-.701
270	172	-.249	.109	.117	-.683
270	173	-.273	.100	.110	-.724

APPENDIX A -- PRESSURE DATA: CONFIGURATION A: HOUSTON NATIONAL BANK

WD	TAP	CPMEAN	CPRMS	CPMAX	CPMIN
270	174	-.296	.114	.133	-.748
270	175	-.299	.113	.174	-.762
270	176	-.283	.109	.105	-.779
270	177	-.313	.097	-.000	-.645
270	178	-.289	.111	.059	-.674
270	179	-.289	.112	.096	-.677
270	180	-.278	.111	.102	-.670
270	181	-.344	.106	.057	-.732
270	182	-.338	.110	.047	-.856
270	183	-.324	.116	.131	-.774
270	184	-.317	.115	.113	-.771
270	185	-.341	.102	.082	-.745
270	186	-.313	.113	.133	-.728
270	187	-.318	.112	.096	-.704
270	188	-.304	.112	.104	-.699
270	189	-.323	.098	.017	-.660
270	190	-.292	.116	.139	-.697
270	191	-.298	.111	.105	-.704
270	201	-.341	.112	.025	-.716
270	202	-.351	.101	.007	-.698
270	203	-.244	.125	.183	-.708
270	204	.228	.212	.910	-.612
270	205	.306	.221	.958	-.887
270	206	-.165	.119	.322	-.517
270	207	-.033	.146	.617	-.495
270	208	.185	.179	.772	-.327
270	209	.391	.217	1.064	-.338
270	210	.424	.197	1.077	-.282
270	211	-.107	.129	.380	-.498
270	212	-.015	.135	.485	-.416
270	213	.223	.165	.848	-.325
270	214	.338	.168	.996	-.294
270	215	.384	.202	1.124	-.756
270	216	-.269	.173	.514	-.743
270	217	-.186	.227	.605	-.786
270	218	-.512	.148	.204	-1.083
270	219	-.357	.117	-.005	-.826
270	220	-.120	.124	.381	-.605
270	221	-.014	.130	.552	-.426
270	222	.197	.136	.735	-.193
270	223	.371	.188	1.076	-.444
270	224	.388	.207	1.117	-.497
270	225	-.065	.121	.408	-.432
270	226	.086	.131	.575	-.304
270	227	.260	.261	1.098	-.705
270	228	-.357	.137	.248	-.801
270	229	-.143	.132	.408	-.589
270	230	-.062	.112	.414	-.426
270	231	.250	.158	.908	-.243
270	232	.403	.194	1.067	-.420
270	233	.421	.208	1.059	-.402
270	234	-.195	.106	.140	-.556
270	235	-.062	.126	.306	-.478
270	236	.189	.166	.834	-.332
270	237	-.424	.154	.071	-1.093
270	238	-.259	.099	.084	-.604
270	239	-.140	.119	.292	-.563
270	240	.036	.137	.530	-.460
270	241	.066	.141	.577	-.467
270	242	.229	.128	.682	-.188
270	243	.400	.177	1.083	-.130
270	244	.375	.189	1.145	-.417
270	245	-.384	.126	.001	-.898
270	246	-.371	.090	-.081	-.664
270	247	-.375	.103	.029	-.786
270	248	-.380	.128	.155	-1.012
270	249	-.372	.120	.116	-.908
270	250	-.374	.123	.084	-.794
270	251	-.240	.119	.178	-.752
270	252	-.164	.123	.323	-.678
270	253	.036	.136	.611	-.492
270	254	.126	.135	.599	-.313
270	255	.237	.164	.793	-.287
270	256	.323	.200	1.003	-.634
270	257	.329	.211	.997	-.558
270	258	-.170	.143	.422	-.587
270	259	-.141	.202	.522	-.652
270	260	-.382	.122	.108	-1.186
270	261	-.199	.106	.125	-.561
270	262	-.192	.101	.158	-.545
270	263	-.099	.116	.301	-.513
270	264	-.079	.129	.449	-.537
270	265	.068	.126	.544	-.341
270	266	.133	.125	.568	-.214
270	267	.259	.182	.893	-.604
270	268	.184	.215	.833	-.698
270	269	-.270	.113	.140	-.649
270	270	-.251	.098	.138	-.548
270	271	-.076	.107	.284	-.414
270	272	-.134	.110	.236	-.491
270	273	-.018	.109	.340	-.365
270	274	-.030	.099	.345	-.364
270	275	.055	.172	.571	-.682
270	276	-.049	.201	.540	-.829
270	277	-.068	.104	.313	-.419
270	278	-.095	.104	.207	-.484
270	279	-.023	.114	.311	-.460
270	280	-.248	.122	.122	-.678
270	281	-.212	.118	.258	-.616
270	282	-.117	.104	.222	-.451
270	283	-.034	.117	.440	-.421
270	284	-.130	.126	.275	-.582
270	285	-.035	.118	.344	-.462
270	286	-.037	.104	.283	-.343
270	287	.087	.132	.532	-.627
270	288	-.023	.163	.454	-.733
270	301	-.160	.124	.386	-.521
270	302	.106	.189	.613	-.817
270	303	.076	.152	.549	-.473
270	304	.148	.249	.830	-.991
270	305	-.165	.123	.250	-.616
270	306	.233	.204	.837	-.407
270	307	.122	.138	.694	-.369
270	308	-.359	.115	.023	-.781
270	309	.288	.230	1.030	-.665
270	310	.322	.223	1.052	-.760
270	311	.365	.198	1.063	-.513
270	312	.177	.174	.778	-.415
270	313	.135	.145	.611	-.282
270	314	-.047	.117	.441	-.404
270	315	-.175	.112	.242	-.523
270	316	-.382	.120	.018	-.769
270	317	.249	.253	1.063	-.598
270	318	.173	.221	.726	-.797
270	319	.179	.153	.663	-.345
270	320	-.006	.150	.495	-.441
270	321	-.024	.129	.426	-.407
270	322	-.180	.119	.247	-.576
270	323	-.296	.101	.099	-.613
270	324	.146	.269	.927	-1.049
270	325	.228	.220	.877	-.744
270	326	.143	.145	.733	-.354
270	327	.098	.145	.681	-.393
270	328	-.117	.145	.447	-.623
270	329	-.196	.120	.280	-.613
270	330	-.335	.105	.022	-.663
270	331	.230	.240	.916	-.674
270	332	.145	.234	.851	-.870
270	333	.149	.159	.711	-.602
270	334	-.011	.122	.386	-.459
270	335	-.052	.120	.314	-.504
270	336	-.320	.120	.046	-.755
270	337	-.287	.112	.055	-.684
270	338	.191	.180	.832	-.533
270	339	.236	.178	.916	-.457
270	340	.064	.168	.646	-.436
270	341	.052	.142	.543	-.387
270	342	-.108	.120	.383	-.495
270	343	-.226	.114	.220	-.605
270	344	-.453	.122	-.008	-.852

APPENDIX A -- PRESSURE DATA: CONFIGURATION A; HOUSTON NATIONAL BANK

WD	TAP	CPMEAN	CPRMS	CPMAX	CPMIN
270	345	.163	.173	.808	-.790
270	346	.104	.147	.623	-.530
270	347	.095	.144	.574	-.414
270	348	-.092	.148	.480	-.629
270	349	-.089	.128	.387	-.552
270	350	-.282	.115	.138	-.667
270	351	-.336	.117	.076	-.715
270	352	-.188	.101	.225	-.537
270	353	-.234	.123	.277	-.651
270	354	-.139	.114	.243	-.552
270	355	-.102	.117	.311	-.523
270	356	.068	.176	.682	-.570
270	357	.082	.165	.782	-.540
270	358	.038	.140	.610	-.379
270	359	.029	.137	.637	-.393
270	360	-.019	.131	.563	-.429
270	361	-.047	.124	.494	-.447
270	362	-.100	.115	.306	-.543
270	401	-.340	.113	.042	-.700
270	402	-.353	.115	.028	-.719
270	403	-.346	.116	.041	-.730
270	404	-.426	.104	-.075	-.797
270	405	-.379	.110	-.011	-.781
270	406	-.381	.110	-.007	-.746
270	407	-.372	.110	.007	-.728
270	408	-.416	.102	-.058	-.812
270	409	-.376	.109	-.013	-.760
270	410	-.391	.111	-.022	-.779
270	411	-.373	.110	.007	-.807
270	412	-.415	.100	-.012	-.781
270	413	-.372	.103	.049	-.756
270	414	-.395	.114	.052	-.838
270	415	-.387	.110	.029	-.769
270	416	-.414	.109	-.055	-.795
270	417	-.393	.114	.102	-.853
270	418	-.384	.114	-.009	-.765
270	419	-.384	.116	-.010	-.750
270	420	-.436	.106	-.127	-.875
270	421	-.342	.107	-.023	-.695
270	422	-.368	.109	-.048	-.717
270	423	-.364	.115	-.007	-.724
270	424	-.372	.116	.022	-.834
270	425	-.366	.115	.027	-.863
270	426	-.418	.101	-.094	-.762
270	427	-.377	.116	.016	-.874
270	428	-.455	.111	-.041	-.795
270	429	-.413	.117	.039	-.775
270	430	-.392	.119	.020	-.794
270	431	-.395	.122	.044	-.823
270	432	-.403	.110	-.048	-.801

WD	TAP	CPMEAN	CPRMS	CPMAX	CPMIN
270	433	-.367	.119	.004	-.825
270	434	-.371	.113	-.039	-.810
270	435	-.370	.118	.006	-.823
270	436	-.456	.117	-.017	-.869
270	437	-.419	.124	.033	-.876
270	438	-.388	.122	.035	-.804
270	439	-.380	.120	.044	-.797
270	440	-.394	.108	.011	-.773
270	441	-.363	.114	.082	-.760
270	442	-.380	.118	.087	-.792
270	443	-.388	.122	.106	-.807
270	444	-.463	.121	.017	-.897
270	445	-.321	.118	.066	-.739
270	446	-.365	.123	.031	-1.009
270	447	-.356	.124	.066	-.810
270	448	-.400	.105	.010	-.745
270	449	-.390	.116	.015	-.819
270	450	-.385	.110	.041	-.751
270	451	-.387	.111	.031	-.772
270	452	-.445	.106	-.110	-.863
270	453	-.438	.122	-.043	-.978
270	454	-.462	.123	-.044	-1.065
270	455	-.358	.118	.035	-.772
270	456	-.391	.112	.104	-.819
270	457	-.359	.127	.203	-.944
270	458	-.375	.119	.180	-.830
270	459	-.391	.123	.127	-.878
270	460	-.455	.122	-.044	-.877
270	461	-.394	.122	-.007	-.821
270	462	-.411	.121	-.026	-.824
270	463	-.421	.121	-.019	-.848
270	464	-.456	.106	-.132	-.826
270	465	-.444	.118	-.084	-.846
270	466	-.442	.118	-.102	-.850
270	467	-.432	.123	-.037	-.933
270	468	-.463	.113	.006	-.865
270	469	-.509	.126	-.091	-.989
270	470	-.531	.126	-.119	-.987
270	471	-.529	.125	-.165	-.974
270	472	-.516	.109	-.193	-.910
270	473	-.449	.116	-.076	-.869
270	474	-.416	.116	-.064	-.841
270	475	-.388	.128	.011	-1.005
270	476	-.416	.120	-.052	-.892
270	477	-.494	.131	-.024	-.948
270	478	-.520	.132	-.080	-1.060
270	479	-.502	.128	-.109	-1.014
270	480	-.454	.109	-.094	-.874
270	481	-.386	.118	-.016	-.861
270	483	-.358	.121	.083	-.833

WD	TAP	CPMEAN	CPRMS	CPMAX	CPMIN
270	484	-.345	.103	.008	-.736
270	485	-.059	.119	.453	-.446
270	486	-.284	.115	.146	-.690
270	501	-.379	.112	.012	-.832
270	502	-.323	.127	.138	-.891
270	503	-.425	.127	.003	-.960
270	504	-.325	.118	.066	-.773
270	505	-.342	.125	.214	-.825
270	506	-.300	.134	.112	-.754
270	507	-.428	.131	.006	-.938
270	508	-.323	.124	.079	-.837
270	509	-.338	.104	.027	-.700
270	510	-.266	.131	.170	-.812
270	511	-.391	.139	.062	-.867
270	512	-.291	.118	.152	-.693
270	601	-.372	.133	.074	-.805
270	602	-.404	.113	-.019	-.771
270	603	-.455	.115	-.082	-.819
270	604	-.612	.147	-.021	-1.191
270	605	.225	.211	.994	-.504
270	606	-.406	.117	-.034	-.909
270	607	-.415	.134	.056	-.899
270	608	.133	.231	1.006	-.764
270	609	-.368	.129	.025	-.892
270	610	-.400	.104	-.097	-.815
270	611	-.400	.126	-.042	-.916
270	612	-.628	.149	-.210	-1.307
270	613	.133	.172	.794	-.414
270	614	-.248	.136	.195	-.713
270	615	.021	.138	.657	-.483
270	701	-.233	.236	.677	-1.154
270	702	-.406	.111	-.022	-.757
270	703	-.059	.156	.469	-.730
270	704	-.473	.128	.020	-.882
270	705	-.004	.138	.478	-.414
270	706	-.196	.121	.202	-.562
270	707	-.333	.124	.229	-.772
270	708	-.161	.143	.393	-.580
270	709	-.064	.137	.449	-.468
270	710	-.150	.122	.367	-.516
270	711	-.131	.125	.340	-.475
270	712	-.412	.127	-.000	-.838
270	801	-.590	.136	-.160	-1.164
270	802	-.566	.161	.027	-1.389
270	803	-.551	.148	-.105	-1.130
270	804	-.389	.130	.023	-.808
270	805	-.389	.115	.056	-.815
270	806	-.535	.140	-.009	-.981
270	807	-.496	.132	-.080	-.983
270	808	-.328	.134	.141	-.854

APPENDIX A -- PRESSURE DATA: CONFIGURATION A: HOUSTON NATIONAL BANK

WD	TAP	CPMEAN	CPRMS	CPMAX	CPMIN
270	809	-.543	.131	-.077	-1.118
270	810	-.474	.145	-.001	-1.059
270	811	-.458	.146	.128	-.976
270	812	-.377	.134	.071	-1.099
270	813	-.404	.142	.047	-.984
270	814	-.459	.133	-.039	-1.000
270	815	-.641	.170	-.088	-1.456
270	816	-.274	.126	.163	-.759
270	817	-.332	.103	.046	-.722
270	818	-.250	.120	.154	-.661
270	819	-.484	.133	-.014	-1.042
270	820	-.451	.148	.260	-1.027
270	821	-.195	.127	.546	-.611
270	822	-.137	.115	.361	-.481
270	823	-.316	.131	.135	-.738
270	901	-.637	.157	-.004	-1.453
270	902	.013	.262	.809	-1.174
270	903	.001	.191	.670	-.933
270	904	-.427	.139	.064	-.981
270	905	-.481	.172	.373	-1.184
270	906	-.409	.128	.054	-.930
270	907	-.449	.124	-.068	-.941
270	908	-.411	.135	.065	-.931
270	909	-.497	.135	-.073	-.993
270	910	-.415	.136	.001	-.862
270	911	-.438	.109	-.004	-.790
270	912	-.330	.117	.136	-.765
270	913	-.454	.143	.032	-.988
270	914	-.360	.118	.101	-.783
270	915	-.357	.121	.041	-.881
280	1	-.136	.132	.323	-.568
280	2	-.198	.105	.185	-.558
280	3	-.386	.106	-.019	-.750
280	4	-.397	.106	-.037	-.747
280	5	.274	.176	1.020	-.372
280	6	.178	.152	.614	-.290
280	7	-.391	.115	.037	-.850
280	8	-.396	.112	.020	-.827
280	9	.276	.170	.831	-.320
280	10	.237	.181	.745	-.430
280	11	-.399	.117	.024	-.827
280	12	-.380	.115	.069	-.814
280	13	-.381	.113	.024	-.824
280	14	-.409	.095	-.106	-.774
280	15	-.228	.163	.405	-.781
280	16	-.206	.192	.465	-.856
280	17	-.389	.106	-.085	-.798
280	18	-.412	.099	-.098	-.813
280	19	.204	.199	1.067	-.602
280	20	.215	.174	.895	-.342

WD	TAP	CPMEAN	CPRMS	CPMAX	CPMIN
280	21	-.397	.112	-.029	-.888
280	22	-.422	.099	-.034	-.789
280	23	-.159	.119	.224	-.667
280	24	-.231	.111	.241	-.638
280	25	-.360	.114	.075	-.814
280	26	-.395	.106	-.036	-.782
280	27	-.408	.134	.081	-.909
280	28	-.377	.145	.238	-.935
280	29	-.385	.120	.061	-.875
280	30	-.399	.102	-.083	-.791
280	31	-.462	.154	.140	-1.362
280	32	-.080	.129	.336	-.739
280	101	-.383	.103	-.056	-.777
280	102	-.369	.112	.012	-.778
280	103	-.371	.114	.027	-.801
280	104	-.374	.113	.004	-.768
280	105	-.368	.118	.025	-.807
280	106	-.344	.117	.032	-.762
280	107	-.371	.130	.132	-.810
280	108	-.316	.150	.121	-.851
280	109	-.394	.108	-.061	-.840
280	110	-.358	.115	.018	-.821
280	111	-.364	.117	.010	-.835
280	112	-.347	.117	.023	-.779
280	113	-.447	.111	-.016	-.968
280	114	-.257	.126	.114	-.716
280	115	-.218	.131	.244	-.715
280	116	-.347	.103	.008	-.691
280	117	-.381	.101	-.002	-.715
280	118	-.336	.115	.076	-.705
280	119	-.365	.114	.065	-.707
280	120	-.349	.113	.076	-.693
280	121	-.370	.101	-.064	-.716
280	122	-.331	.110	-.009	-.717
280	123	-.345	.114	-.010	-.731
280	124	-.061	.144	.505	-.577
280	125	-.489	.146	.044	-.959
280	126	-.377	.155	.229	-.891
280	127	-.367	.116	.043	-.765
280	128	-.354	.114	.057	-.754
280	129	-.379	.102	-.067	-.754
280	130	-.323	.112	.038	-.748
280	131	-.316	.116	.050	-.771
280	132	-.348	.204	.459	-1.029
280	133	-.359	.168	.131	-.945
280	134	-.348	.117	.024	-.717
280	135	-.360	.119	.046	-.718
280	136	-.345	.117	.002	-.709
280	137	-.376	.104	.008	-.740
280	138	-.334	.115	.070	-.723

WD	TAP	CPMEAN	CPRMS	CPMAX	CPMIN
280	139	-.343	.117	.092	-.752
280	140	-.324	.116	.101	-.733
280	141	-.361	.103	-.034	-.683
280	142	-.346	.116	.023	-.775
280	143	-.345	.116	.034	-.722
280	144	-.338	.112	.026	-.705
280	145	-.396	.105	-.064	-.762
280	146	-.345	.114	.017	-.745
280	147	-.352	.115	.010	-.758
280	148	-.355	.126	.140	-1.052
280	149	-.384	.104	-.045	-.984
280	150	-.330	.128	.088	-.914
280	151	-.343	.120	.053	-.774
280	152	-.319	.117	.058	-.774
280	153	-.355	.102	-.029	-.697
280	154	-.310	.117	.044	-.751
280	155	-.321	.118	.043	-.799
280	156	-.354	.123	.078	-.792
280	157	-.415	.103	-.049	-.800
280	158	-.369	.113	.047	-.781
280	159	-.354	.110	.028	-.750
280	160	-.344	.104	.063	-.717
280	161	-.353	.116	.041	-.886
280	162	-.293	.125	.143	-.833
280	163	-.296	.134	.153	-.918
280	164	-.363	.141	.147	-.976
280	165	-.365	.122	.074	-.838
280	166	-.312	.120	.090	-.806
280	167	-.333	.124	.148	-.878
280	168	-.312	.120	.103	-.835
280	169	-.336	.102	.001	-.686
280	170	-.290	.112	.096	-.697
280	171	-.292	.112	.043	-.687
280	172	-.273	.112	.067	-.650
280	173	-.302	.099	-.002	-.747
280	174	-.334	.117	.081	-.995
280	175	-.340	.117	.076	-.830
280	176	-.327	.113	.011	-.791
280	177	-.310	.103	.035	-.666
280	178	-.328	.119	.087	-.735
280	179	-.325	.120	.084	-.746
280	180	-.322	.119	.082	-.751
280	181	-.307	.108	-.000	-.854
280	182	-.377	.111	.038	-.938
280	183	-.335	.124	.067	-.851
280	184	-.334	.124	.060	-.802
280	185	-.307	.115	.043	-.917
280	186	-.324	.130	.060	-.998
280	187	-.331	.132	.033	-1.591
280	188	-.321	.131	.033	-1.372

APPENDIX A -- PRESSURE DATA: CONFIGURATION A; HOUSTON NATIONAL BANK

WD	TAP	CPMEAN	CPRMS	CPMAX	CPMIN
280	189	-.301	.099	.051	-.774
280	190	-.315	.120	.123	-.798
280	191	-.320	.115	.114	-.800
280	201	-.334	.110	.048	-.764
280	202	-.286	.108	.138	-.633
280	203	-.220	.141	.354	-.646
280	204	-.030	.251	.945	-.719
280	205	.278	.287	1.171	-.690
280	206	-.039	.132	.591	-.482
280	207	.085	.163	.893	-.429
280	208	.319	.197	1.115	-.207
280	209	.537	.212	1.197	-.233
280	210	.457	.153	1.010	-.145
280	211	-.022	.125	.414	-.460
280	212	.078	.134	.535	-.375
280	213	.310	.161	.978	-.163
280	214	.461	.162	.995	-.144
280	215	.444	.188	1.064	-.271
280	216	-.292	.171	.494	-.761
280	217	-.165	.238	.657	-.775
280	218	-.445	.205	.392	-1.207
280	219	-.365	.126	.015	-.845
280	220	-.037	.135	.464	-.507
280	221	.062	.144	.589	-.437
280	222	.320	.162	.830	-.156
280	223	.441	.210	1.153	-.135
280	224	.426	.212	1.212	-.255
280	225	-.046	.126	.405	-.527
280	226	.094	.120	.512	-.326
280	227	.388	.199	1.090	-.312
280	228	-.228	.176	.326	-.775
280	229	-.082	.147	.470	-.607
280	230	.080	.123	.466	-.412
280	231	.357	.170	.950	-.246
280	232	.447	.190	1.032	-.136
280	233	.412	.197	1.039	-.136
280	234	-.133	.107	.222	-.477
280	235	-.015	.135	.487	-.462
280	236	.219	.172	.856	-.331
280	237	-.304	.189	.434	-.980
280	238	-.194	.100	.137	-.541
280	239	-.077	.128	.353	-.515
280	240	.133	.154	.730	-.337
280	241	.183	.159	.848	-.364
280	242	.323	.143	.828	-.122
280	243	.423	.188	1.051	-.365
280	244	.361	.185	1.003	-.228
280	245	-.402	.125	.001	-.996
280	246	-.397	.087	-.097	-.682
280	247	-.382	.108	-.051	-.846
280	248	-.323	.173	.458	-.951
280	249	-.336	.166	.561	-.893
280	250	-.391	.124	.080	-1.016
280	251	-.204	.127	.285	-.645
280	252	-.108	.134	.394	-.579
280	253	.106	.155	.677	-.394
280	254	.177	.133	.588	-.195
280	255	.262	.162	.829	-.191
280	256	.314	.174	.956	-.216
280	257	.288	.182	.855	-.338
280	258	-.041	.134	.365	-.522
280	259	.044	.215	.746	-.662
280	260	-.405	.136	.030	-.990
280	261	-.190	.119	.224	-.601
280	262	-.143	.114	.223	-.576
280	263	-.025	.134	.482	-.500
280	264	-.045	.156	.457	-.553
280	265	.108	.147	.665	-.364
280	266	.142	.138	.581	-.245
280	267	.239	.159	.825	-.365
280	268	.120	.185	.798	-.534
280	269	-.250	.116	.162	-.645
280	270	-.236	.109	.108	-.563
280	271	-.051	.118	.300	-.415
280	272	-.140	.126	.224	-.534
280	273	-.001	.121	.377	-.387
280	274	.008	.107	.377	-.383
280	275	.129	.134	.620	-.437
280	276	.006	.166	.589	-.629
280	277	-.035	.115	.379	-.483
280	278	-.058	.106	.289	-.443
280	279	.016	.110	.369	-.413
280	280	-.228	.122	.331	-.610
280	281	-.174	.119	.238	-.712
280	282	-.072	.111	.326	-.526
280	283	.018	.128	.485	-.478
280	284	-.096	.146	.519	-.690
280	285	.007	.125	.557	-.495
280	286	-.027	.106	.342	-.451
280	287	.097	.137	.617	-.563
280	288	-.037	.175	.587	-.995
280	301	-.260	.130	.169	-.825
280	302	-.321	.291	.456	-1.312
280	303	-.096	.157	.428	-.765
280	304	-.351	.343	.542	-1.467
280	305	-.238	.115	.197	-.639
280	306	-.179	.272	.663	-.967
280	307	-.019	.161	.530	-.579
280	308	-.425	.141	-.016	-.927
280	309	-.041	.301	.840	-1.344
280	310	-.113	.304	.887	-1.225
280	311	.100	.255	.988	-.941
280	312	-.023	.179	.760	-.851
280	313	-.001	.143	.638	-.441
280	314	-.155	.126	.278	-.641
280	315	-.227	.125	.171	-.684
280	316	-.457	.138	-.029	-.937
280	317	-.036	.310	.922	-1.117
280	318	-.099	.291	.640	-.954
280	319	.090	.182	.626	-.690
280	320	-.106	.160	.479	-.626
280	321	-.091	.135	.354	-.517
280	322	-.222	.118	.186	-.597
280	323	-.331	.104	.033	-.704
280	324	-.206	.352	.700	-1.190
280	325	-.068	.328	.746	-1.053
280	326	-.019	.165	.521	-.789
280	327	-.004	.139	.494	-.597
280	328	-.232	.142	.261	-.726
280	329	-.244	.117	.132	-.627
280	330	-.365	.103	.013	-.728
280	331	-.053	.303	.720	-1.377
280	332	-.165	.340	.668	-1.714
280	333	.016	.185	.549	-.984
280	334	-.072	.131	.382	-.596
280	335	-.085	.129	.384	-.533
280	336	-.380	.132	.105	-.809
280	337	-.317	.117	.099	-.695
280	338	-.084	.269	.627	-1.010
280	339	.028	.260	.694	-.933
280	340	-.098	.187	.484	-.934
280	341	-.052	.147	.394	-.576
280	342	-.198	.134	.220	-.621
280	343	-.244	.127	.174	-.668
280	344	-.484	.139	-.021	-.946
280	345	.098	.216	.696	-.828
280	346	.012	.177	.470	-.941
280	347	.055	.139	.552	-.449
280	348	-.151	.147	.373	-.577
280	349	-.118	.126	.294	-.471
280	350	-.294	.119	.074	-.720
280	351	-.350	.122	.072	-.785
280	352	-.194	.103	.137	-.552
280	353	-.258	.128	.235	-.714
280	354	-.137	.117	.264	-.577
280	355	-.120	.123	.270	-.579
280	356	.078	.204	.764	-.699
280	357	.086	.187	.784	-.658
280	358	.030	.152	.523	-.481
280	359	.005	.147	.495	-.512

APPENDIX A -- PRESSURE DATA: CONFIGURATION A: HOUSTON NATIONAL BANK

WD	TAP	CPMEAN	CPRMS	CPMAX	CPMIN
280	360	-.044	.139	.435	-.531
280	361	-.072	.133	.405	-.540
280	362	-.092	.125	.338	-.447
280	401	-.377	.114	.114	-.771
280	402	-.388	.115	.106	-.794
280	403	-.380	.116	.094	-.811
280	404	-.401	.106	-.021	-.855
280	405	-.373	.115	.054	-.848
280	406	-.378	.113	.039	-.741
280	407	-.372	.114	.061	-.735
280	408	-.407	.101	-.090	-.780
280	409	-.386	.110	-.035	-.781
280	410	-.398	.111	-.027	-.792
280	411	-.381	.111	-.021	-.763
280	412	-.410	.102	-.088	-.777
280	413	-.381	.108	-.021	-.755
280	414	-.407	.112	-.069	-.797
280	415	-.391	.114	-.014	-.784
280	416	-.426	.105	-.048	-.820
280	417	-.393	.113	-.011	-.759
280	418	-.411	.112	-.018	-.827
280	419	-.413	.115	.003	-.846
280	420	-.439	.108	-.109	-.788
280	421	-.369	.111	.023	-.760
280	422	-.388	.111	-.004	-.774
280	423	-.383	.116	.012	-.781
280	424	-.378	.114	-.015	-.744
280	425	-.373	.113	.098	-.773
280	426	-.420	.102	-.077	-.784
280	427	-.383	.113	.080	-.796
280	428	-.442	.102	-.108	-.793
280	429	-.415	.110	-.040	-.818
280	430	-.392	.108	-.018	-.804
280	431	-.394	.113	-.018	-.822
280	432	-.410	.111	-.016	-.769
280	433	-.384	.120	.062	-.790
280	434	-.396	.117	-.027	-.771
280	435	-.395	.121	.002	-.785
280	436	-.433	.113	-.071	-.867
280	437	-.410	.122	-.004	-.887
280	438	-.383	.121	-.001	-.857
280	439	-.381	.120	.003	-.857
280	440	-.415	.101	-.125	-.741
280	441	-.400	.108	-.074	-.733
280	442	-.412	.111	-.074	-.768
280	443	-.419	.117	-.059	-.853
280	444	-.444	.112	-.063	-.987
280	445	-.331	.115	.054	-.845
280	446	-.376	.116	.000	-.887
280	447	-.374	.117	-.011	-.890

WD	TAP	CPMEAN	CPRMS	CPMAX	CPMIN
280	448	-.399	.112	.031	-.862
280	449	-.382	.113	.015	-.752
280	450	-.400	.119	.023	-.884
280	451	-.409	.120	-.003	-.888
280	452	-.448	.104	-.153	-.854
280	453	-.462	.128	-.084	-.944
280	454	-.494	.129	-.075	-1.079
280	455	-.351	.119	-.014	-.808
280	456	-.393	.113	.032	-.820
280	457	-.373	.130	.094	-.840
280	458	-.385	.121	.079	-.774
280	459	-.400	.128	.080	-.813
280	460	-.429	.120	.032	-.833
280	461	-.397	.120	-.005	-.801
280	462	-.411	.117	-.036	-.798
280	463	-.423	.116	-.059	-.810
280	464	-.482	.107	-.113	-.886
280	465	-.448	.117	-.024	-.914
280	466	-.431	.118	.006	-.897
280	467	-.412	.122	.008	-.897
280	468	-.460	.120	-.075	-.969
280	469	-.501	.125	-.072	-1.057
280	470	-.514	.123	-.083	-1.061
280	471	-.523	.125	-.109	-1.070
280	472	-.506	.120	-.062	-.910
280	473	-.418	.126	.052	-.876
280	474	-.397	.125	.029	-.825
280	475	-.360	.134	.113	-1.078
280	476	-.426	.124	-.077	-1.036
280	477	-.463	.130	-.041	-.935
280	478	-.502	.136	-.101	-.998
280	479	-.489	.129	-.077	-.990
280	480	-.437	.112	.011	-.905
280	481	-.369	.119	.081	-.871
280	483	-.365	.127	.104	-.828
280	484	-.387	.117	.119	-.853
280	485	-.095	.137	.405	-.504
280	486	-.303	.138	.165	-.808
280	501	-.349	.113	.033	-.740
280	502	-.295	.121	.129	-.743
280	503	-.397	.134	.031	-1.081
280	504	-.318	.122	.151	-.708
280	505	-.319	.124	.205	-.971
280	506	-.272	.123	.179	-.864
280	507	-.459	.130	-.025	-.973
280	508	-.344	.123	.043	-.869
280	509	-.357	.112	-.025	-.787
280	510	-.225	.146	.230	-1.115
280	511	-.347	.149	.188	-1.003
280	512	-.304	.125	.262	-.807

WD	TAP	CPMEAN	CPRMS	CPMAX	CPMIN
280	601	-.391	.134	.075	-.869
280	602	-.406	.116	.065	-.804
280	603	-.431	.115	-.040	-.821
280	604	-.601	.151	-.009	-1.292
280	605	.146	.233	.974	-.801
280	606	-.427	.117	-.085	-.937
280	607	-.387	.115	-.018	-.811
280	608	.036	.226	.867	-1.053
280	609	-.392	.126	.003	-.933
280	610	-.391	.103	.015	-.753
280	611	-.365	.112	.047	-.795
280	612	-.587	.132	-.092	-1.016
280	613	.078	.160	.645	-.680
280	614	-.261	.132	.180	-.999
280	615	.018	.125	.507	-.437
280	701	-.185	.196	.567	-1.482
280	702	-.415	.111	.097	-.799
280	703	-.063	.153	.494	-.607
280	704	-.492	.127	.228	-.920
280	705	-.024	.146	.551	-.535
280	706	-.196	.124	.315	-.653
280	707	-.348	.128	.296	-.799
280	708	-.181	.143	.373	-.669
280	709	-.068	.134	.437	-.533
280	710	-.143	.128	.349	-.541
280	711	-.129	.130	.371	-.516
280	712	-.432	.136	.045	-.913
280	801	-.567	.132	-.042	-1.126
280	802	-.537	.149	-.045	-1.168
280	803	-.550	.141	-.070	-1.125
280	804	-.390	.123	.014	-.840
280	805	-.426	.115	-.034	-.829
280	806	-.510	.130	-.052	-.970
280	807	-.534	.136	.003	-1.101
280	808	-.355	.137	.209	-.913
280	809	-.537	.124	-.074	-.946
280	810	-.481	.140	-.004	-.927
280	811	-.480	.156	.136	-1.098
280	812	-.390	.142	.189	-.957
280	813	-.363	.142	.073	-.974
280	814	-.440	.126	.064	-.822
280	815	-.620	.154	-.007	-1.141
280	816	-.288	.127	.182	-.758
280	817	-.334	.099	-.044	-.692
280	818	-.243	.126	.195	-.839
280	819	-.530	.144	-.022	-.991
280	820	-.485	.153	.101	-1.054
280	821	-.242	.126	.185	-.710
280	822	-.150	.115	.248	-.539
280	823	-.297	.134	.243	-.946

APPENDIX A -- PRESSURE DATA: CONFIGURATION A; HOUSTON NATIONAL BANK

WD	TAP	CPMEAN	CPRMS	CPMAX	CPMIN
280	901	-.641	.146	-.192	-1.232
280	902	-.079	.293	.690	-1.252
280	903	-.007	.210	.718	-1.178
280	904	-.437	.129	.078	-.981
280	905	-.522	.163	.292	-1.343
280	906	-.426	.119	.031	-.880
280	907	-.457	.109	-.127	-.842
280	908	-.408	.118	-.034	-.845
280	909	-.513	.117	-.146	-.971
280	910	-.429	.124	-.057	-.932
280	911	-.447	.114	-.109	-.879
280	912	-.375	.129	.037	-.905
280	913	-.483	.149	.048	-1.217
280	914	-.404	.130	.068	-1.036
280	915	-.397	.123	.044	-.891
290	1	-.107	.133	.369	-.521
290	2	-.130	.118	.282	-.533
290	3	-.388	.119	-.019	-.915
290	4	-.411	.120	-.035	-.988
290	5	.359	.177	.952	-.217
290	6	.236	.156	.833	-.226
290	7	-.372	.113	.037	-.817
290	8	-.380	.112	.004	-.805
290	9	.097	.154	.596	-.419
290	10	.120	.152	.648	-.406
290	11	-.394	.120	.034	-.861
290	12	-.389	.125	.039	-.877
290	13	-.360	.112	.025	-.705
290	14	-.383	.102	-.006	-.739
290	15	-.097	.176	.632	-.743
290	16	-.045	.203	.691	-.849
290	17	-.369	.114	.068	-.770
290	18	-.384	.099	-.048	-.696
290	19	.209	.211	1.180	-.412
290	20	.218	.182	.838	-.379
290	21	-.374	.113	-.019	-.753
290	22	-.395	.101	-.055	-.706
290	23	-.152	.125	.255	-.573
290	24	-.195	.122	.232	-.606
290	25	-.342	.115	.055	-.744
290	26	-.387	.102	-.026	-.709
290	27	-.409	.132	.002	-.855
290	28	-.302	.156	.263	-.784
290	29	-.372	.114	-.033	-.767
290	30	-.394	.104	-.037	-.741
290	31	-.360	.219	.360	-1.206
290	32	-.043	.130	.417	-.448
290	101	-.419	.113	-.007	-.817
290	102	-.387	.110	.011	-.781
290	103	-.399	.115	.016	-.816
290	104	-.441	.121	-.082	-.909
290	105	-.420	.134	-.007	-1.090
290	106	-.369	.114	.122	-.865
290	107	-.488	.146	-.019	-1.167
290	108	-.446	.180	.125	-1.276
290	109	-.413	.103	-.068	-.843
290	110	-.372	.113	-.035	-.836
290	111	-.376	.113	-.001	-.825
290	112	-.359	.112	.017	-.797
290	113	-.457	.146	.069	-.925
290	114	-.240	.143	.272	-.737
290	115	-.156	.139	.351	-.580
290	116	-.342	.113	.087	-.712
290	117	-.391	.104	-.013	-.763
290	118	-.349	.118	.101	-.770
290	119	-.371	.117	.053	-.764
290	120	-.355	.116	.066	-.740
290	121	-.363	.099	-.041	-.733
290	122	-.333	.111	.040	-.718
290	123	-.342	.114	.052	-.742
290	124	.076	.163	.697	-.543
290	125	-.438	.173	.139	-1.058
290	126	-.311	.176	.363	-.940
290	127	-.379	.106	-.074	-.782
290	128	-.364	.105	-.051	-.743
290	129	-.390	.102	-.000	-.719
290	130	-.338	.112	.104	-.721
290	131	-.332	.114	.105	-.706
290	132	-.167	.215	.461	-.958
290	133	-.174	.188	.460	-.987
290	134	-.365	.111	.046	-.805
290	135	-.375	.114	.025	-.798
290	136	-.362	.112	.024	-.785
290	137	-.371	.102	-.076	-.765
290	138	-.332	.113	.024	-.766
290	139	-.339	.115	.039	-.764
290	140	-.319	.113	.057	-.740
290	141	-.349	.107	.006	-.708
290	142	-.337	.117	.072	-.982
290	143	-.339	.116	.052	-.822
290	144	-.332	.115	.042	-.703
290	145	-.382	.103	-.035	-.795
290	146	-.335	.114	.073	-.821
290	147	-.338	.116	.070	-.832
290	148	-.377	.136	.054	-1.123
290	149	-.369	.099	-.011	-.737
290	150	-.315	.123	.131	-.790
290	151	-.340	.115	.047	-.721
290	152	-.319	.113	.076	-.722
290	153	-.368	.099	-.065	-.694
290	154	-.323	.114	.038	-.795
290	155	-.330	.112	.003	-.819
290	156	-.354	.132	.238	-.804
290	157	-.397	.117	-.029	-1.009
290	158	-.348	.127	.107	-1.011
290	159	-.322	.114	.111	-.693
290	160	-.315	.108	.060	-.665
290	161	-.366	.112	.012	-.808
290	162	-.308	.114	.093	-.697
290	163	-.300	.116	.105	-.712
290	164	-.328	.154	.234	-.786
290	165	-.317	.143	.164	-.909
290	166	-.323	.125	.084	-.793
290	167	-.351	.133	.056	-1.063
290	168	-.333	.126	.087	-.868
290	169	-.355	.110	.003	-.805
290	170	-.311	.118	.066	-.793
290	171	-.310	.118	.104	-.755
290	172	-.293	.117	.122	-.700
290	173	-.315	.105	-.013	-.730
290	174	-.378	.141	.075	-1.014
290	175	-.382	.135	.030	-.908
290	176	-.370	.127	.033	-.843
290	177	-.379	.102	-.031	-.836
290	178	-.369	.117	.077	-.802
290	179	-.363	.119	.088	-.768
290	180	-.358	.119	.092	-.746
290	181	-.391	.120	-.067	-.979
290	182	-.405	.123	-.040	-1.015
290	183	-.377	.133	.003	-1.046
290	184	-.376	.134	-.041	-1.102
290	185	-.350	.125	.166	-1.138
290	186	-.335	.136	.339	-1.066
290	187	-.347	.139	.036	-1.236
290	188	-.344	.139	.060	-1.318
290	189	-.384	.120	.026	-.886
290	190	-.366	.140	.130	-.929
290	191	-.364	.134	.120	-.979
290	201	-.321	.124	.128	-.788
290	202	-.309	.111	.070	-.708
290	203	-.215	.144	.551	-.730
290	204	-.189	.178	.601	-.774
290	205	-.023	.292	1.057	-.792
290	206	.019	.141	.550	-.455
290	207	.175	.177	.829	-.417
290	208	.345	.210	1.098	-.273
290	209	.449	.217	1.187	-.241
290	210	.349	.167	.982	-.250
290	211	.040	.144	.532	-.512
290	212	.170	.154	.690	-.353

APPENDIX A -- PRESSURE DATA: CONFIGURATION A; HOUSTON NATIONAL BANK

WD	TAP	CPMEAN	CPRMS	CPMAX	CPMIN
290	213	.389	.181	1.040	-.255
290	214	.395	.169	1.043	-.174
290	215	.324	.185	.975	-.322
290	216	-.317	.153	.365	-.850
290	217	-.241	.200	.640	-.875
290	218	-.349	.216	.482	-1.085
290	219	-.333	.142	.162	-.865
290	220	.087	.158	.686	-.489
290	221	.175	.166	.806	-.404
290	222	.353	.158	.968	-.167
290	223	.411	.189	1.017	-.179
290	224	.341	.189	.977	-.302
290	225	-.006	.135	.560	-.500
290	226	.088	.129	.594	-.333
290	227	.399	.196	1.096	-.213
290	228	-.032	.173	.556	-.648
290	229	.038	.151	.545	-.483
290	230	.117	.143	.642	-.310
290	231	.362	.182	1.025	-.196
290	232	.357	.183	1.025	-.205
290	233	.249	.187	.968	-.335
290	234	-.120	.110	.336	-.523
290	235	.042	.138	.586	-.458
290	236	.250	.163	.768	-.255
290	237	-.095	.195	.479	-.924
290	238	-.149	.107	.286	-.535
290	239	.015	.136	.542	-.460
290	240	.216	.153	.862	-.284
290	241	.277	.155	.922	-.252
290	242	.342	.152	.887	-.151
290	243	.362	.174	.928	-.223
290	244	.248	.171	.867	-.297
290	245	-.364	.140	.367	-.820
290	246	-.371	.094	.022	-.673
290	247	-.376	.111	-.020	-.722
290	248	-.108	.240	.780	-.768
290	249	-.122	.267	1.004	-.783
290	250	-.381	.142	.160	-.847
290	251	-.121	.127	.349	-.546
290	252	.011	.135	.529	-.457
290	253	.250	.158	.848	-.241
290	254	.223	.147	.725	-.311
290	255	.316	.168	.929	-.282
290	256	.257	.161	.955	-.258
290	257	.144	.165	.752	-.344
290	258	-.056	.115	.322	-.434
290	259	.134	.169	.912	-.469
290	260	-.345	.140	.324	-.889
290	261	-.152	.121	.314	-.592
290	262	-.021	.126	.502	-.446
290	263	.062	.159	.674	-.405
290	264	.166	.175	.897	-.323
290	265	.230	.182	.906	-.315
290	266	.270	.158	.792	-.164
290	267	.229	.174	.839	-.338
290	268	.134	.171	.726	-.540
290	269	-.273	.126	.146	-.739
290	270	-.141	.110	.218	-.475
290	271	-.009	.135	.505	-.402
290	272	.028	.132	.531	-.342
290	273	.069	.137	.587	-.325
290	274	.113	.121	.508	-.273
290	275	.137	.156	.713	-.470
290	276	.104	.160	.684	-.542
290	277	.018	.136	.561	-.392
290	278	.042	.130	.590	-.363
290	279	.036	.144	.592	-.462
290	280	-.216	.120	.161	-.637
290	281	-.162	.150	.381	-.701
290	282	.034	.132	.479	-.361
290	283	.059	.173	.728	-.461
290	284	.068	.183	.837	-.422
290	285	.067	.174	.817	-.414
290	286	.077	.118	.542	-.267
290	287	.068	.157	.571	-.624
290	288	.041	.176	.601	-.729
290	301	-.426	.164	.061	-1.007
290	302	-.585	.235	.067	-1.307
290	303	-.355	.184	.240	-.978
290	304	-.635	.274	.275	-1.452
290	305	-.334	.128	.109	-.857
290	306	-.545	.289	.388	-1.638
290	307	-.234	.182	.335	-1.168
290	308	-.360	.125	.042	-.796
290	309	-.541	.362	.419	-2.198
290	310	-.645	.376	.370	-2.434
290	311	-.399	.324	.600	-1.452
290	312	-.182	.221	.390	-1.079
290	313	-.157	.153	.313	-.848
290	314	-.214	.119	.176	-.772
290	315	-.303	.121	.085	-.729
290	316	-.353	.121	.062	-.800
290	317	-.478	.253	.420	-1.262
290	318	-.445	.246	.452	-1.200
290	319	-.255	.318	.471	-1.668
290	320	-.184	.224	.356	-1.349
290	321	-.195	.159	.247	-1.229
290	322	-.279	.116	.168	-.864
290	323	-.340	.098	-.018	-.760
290	324	-.480	.280	.499	-1.457
290	325	-.463	.305	.521	-1.483
290	326	-.220	.284	.450	-1.342
290	327	-.152	.206	.479	-1.305
290	328	-.199	.153	.359	-1.018
290	329	-.283	.133	.175	-.881
290	330	-.339	.105	.004	-.820
290	331	-.447	.294	.572	-1.693
290	332	-.444	.326	.481	-1.842
290	333	-.224	.276	.422	-1.415
290	334	-.166	.160	.359	-.940
290	335	-.195	.143	.305	-.839
290	336	-.299	.126	.120	-.697
290	337	-.341	.121	.072	-.701
290	338	-.385	.276	.522	-1.386
290	339	-.327	.331	.690	-1.539
290	340	-.173	.228	.568	-1.569
290	341	-.167	.157	.454	-1.112
290	342	-.252	.111	.115	-.945
290	343	-.342	.123	.088	-.824
290	344	-.407	.123	.011	-.884
290	345	-.237	.317	.609	-1.487
290	346	-.093	.206	.540	-1.674
290	347	-.061	.152	.515	-1.047
290	348	-.124	.141	.371	-.592
290	349	-.186	.135	.255	-.622
290	350	-.304	.110	.056	-.728
290	351	-.351	.117	.055	-.804
290	352	-.224	.117	.163	-.567
290	353	-.266	.127	.148	-.714
290	354	-.135	.121	.361	-.579
290	355	-.126	.127	.344	-.594
290	356	.020	.227	.756	-.747
290	357	.033	.211	.717	-.797
290	358	-.028	.161	.609	-.586
290	359	-.051	.149	.570	-.540
290	360	-.090	.138	.496	-.555
290	361	-.109	.131	.448	-.560
290	362	-.118	.123	.313	-.499
290	401	-.378	.124	.052	-.821
290	402	-.386	.123	.022	-.843
290	403	-.376	.121	.025	-.833
290	404	-.390	.107	-.056	-.751
290	405	-.381	.118	-.030	-.796
290	406	-.386	.117	-.010	-.803
290	407	-.383	.117	-.006	-.769
290	408	-.366	.104	-.029	-.767
290	409	-.388	.120	.002	-.821
290	410	-.409	.124	-.006	-.947
290	411	-.365	.118	.027	-.816
290	412	-.382	.101	.027	-.723

APPENDIX A -- PRESSURE DATA: CONFIGURATION A; HOUSTON NATIONAL BANK

WD	TAP	CPMEAN	CPRMS	CPMAX	CPMIN
290	413	-.377	.107	.047	-.744
290	414	-.416	.109	-.017	-.799
290	415	-.393	.114	.047	-.782
290	416	-.361	.099	-.054	-.729
290	417	-.388	.107	.012	-.760
290	418	-.376	.106	-.044	-.768
290	419	-.373	.110	.016	-.750
290	420	-.396	.110	-.039	-.796
290	421	-.350	.113	.016	-.753
290	422	-.367	.112	.024	-.766
290	423	-.364	.116	.000	-.770
290	424	-.371	.108	.014	-.731
290	425	-.366	.110	.036	-.782
290	426	-.382	.097	-.019	-.759
290	427	-.383	.110	.024	-.769
290	428	-.407	.095	-.051	-.742
290	429	-.403	.106	.019	-.764
290	430	-.370	.107	.006	-.728
290	431	-.373	.110	.028	-.756
290	432	-.352	.100	-.020	-.714
290	433	-.347	.109	.007	-.799
290	434	-.367	.108	.018	-.724
290	435	-.365	.111	.015	-.756
290	436	-.391	.105	-.026	-.737
290	437	-.389	.115	.027	-.762
290	438	-.371	.117	.025	-.925
290	439	-.372	.114	.021	-.808
290	440	-.365	.102	-.053	-.729
290	441	-.375	.111	-.022	-.759
290	442	-.380	.113	.002	-.783
290	443	-.375	.115	.043	-.803
290	444	-.386	.113	-.015	-.812
290	445	-.320	.119	.076	-.819
290	446	-.350	.123	.034	-.900
290	447	-.350	.124	.040	-.888
290	448	-.354	.106	.027	-.712
290	449	-.356	.109	.116	-.813
290	450	-.385	.112	.006	-.793
290	451	-.399	.113	.022	-.766
290	452	-.408	.103	-.053	-.747
290	453	-.418	.125	-.025	-.873
290	454	-.446	.129	-.054	-.918
290	455	-.331	.114	.027	-.729
290	456	-.337	.104	.002	-.655
290	457	-.337	.121	.058	-.762
290	458	-.353	.115	.030	-.746
290	459	-.353	.120	.039	-.775
290	460	-.343	.121	.059	-.785
290	461	-.396	.128	.064	-.851
290	462	-.408	.125	.056	-.834

WD	TAP	CPMEAN	CPRMS	CPMAX	CPMIN
290	463	-.426	.122	.019	-.850
290	464	-.465	.115	-.061	-.846
290	465	-.429	.127	.015	-.875
290	466	-.392	.125	.025	-.862
290	467	-.365	.125	.051	-.825
290	468	-.381	.107	.023	-.731
290	469	-.453	.122	-.011	-.845
290	470	-.456	.120	-.026	-.868
290	471	-.474	.121	-.012	-.889
290	472	-.502	.104	-.129	-.905
290	473	-.432	.115	-.041	-.863
290	474	-.412	.114	.001	-.861
290	475	-.377	.118	.040	-.794
290	476	-.404	.118	-.023	-.805
290	477	-.456	.136	.013	-.947
290	478	-.477	.123	-.079	-.915
290	479	-.476	.122	-.096	-.939
290	480	-.441	.101	-.084	-.780
290	481	-.395	.112	.007	-.791
290	483	-.398	.121	-.021	-.864
290	484	-.400	.111	.031	-.743
290	485	-.119	.123	.358	-.508
290	486	-.305	.132	.211	-.801
290	501	-.388	.123	.001	-.796
290	502	-.353	.130	.105	-.755
290	503	-.434	.145	-.002	-.984
290	504	-.399	.135	.126	-.867
290	505	-.279	.125	.134	-.737
290	506	-.260	.130	.202	-.747
290	507	-.483	.141	-.026	-1.123
290	508	-.356	.137	.085	-.953
290	509	-.360	.130	.180	-.909
290	510	-.185	.143	.217	-.807
290	511	-.325	.152	.173	-.909
290	512	-.306	.142	.216	-1.025
290	601	-.407	.134	.036	-1.070
290	602	-.455	.115	-.037	-.823
290	603	-.441	.112	-.060	-.856
290	604	-.640	.148	-.087	-1.227
290	605	.101	.236	.969	-.926
290	606	-.458	.116	-.098	-.853
290	607	-.416	.115	-.032	-.798
290	608	-.008	.225	.871	-1.086
290	609	-.424	.128	-.021	-.842
290	610	-.434	.110	-.076	-.818
290	611	-.395	.124	.009	-.809
290	612	-.609	.142	-.157	-1.111
290	613	.040	.159	.599	-.859
290	614	-.308	.144	.101	-.969
290	615	-.014	.136	.451	-.444

WD	TAP	CPMEAN	CPRMS	CPMAX	CPMIN
290	701	-.215	.197	.352	-1.002
290	702	-.423	.121	.037	-.774
290	703	-.090	.155	.432	-.632
290	704	-.513	.140	.212	-.943
290	705	-.060	.151	.518	-.469
290	706	-.218	.120	.160	-.648
290	707	-.312	.117	.084	-.713
290	708	-.252	.140	.224	-.722
290	709	-.136	.134	.335	-.587
290	710	-.186	.121	.254	-.569
290	711	-.161	.121	.211	-.581
290	712	-.460	.132	-.094	-.878
290	801	-.549	.125	-.153	-.954
290	802	-.517	.140	-.047	-1.017
290	803	-.566	.138	-.121	-1.081
290	804	-.402	.124	-.018	-.836
290	805	-.431	.117	-.029	-1.030
290	806	-.491	.130	-.056	-.974
290	807	-.555	.133	-.160	-1.042
290	808	-.359	.147	.311	-1.087
290	809	-.522	.121	-.125	-.939
290	810	-.475	.132	.020	-.912
290	811	-.500	.147	.090	-1.031
290	812	-.379	.145	.371	-.923
290	813	-.346	.158	.208	-.991
290	814	-.443	.135	-.056	-.946
290	815	-.654	.162	-.197	-1.347
290	816	-.313	.137	.121	-.812
290	817	-.277	.104	.050	-.633
290	818	-.187	.128	.238	-.696
290	819	-.523	.135	-.058	-1.074
290	820	-.450	.142	.136	-1.033
290	821	-.303	.125	.124	-.794
290	822	-.173	.119	.173	-.575
290	823	-.286	.145	.166	-.965
290	901	-.638	.144	-.089	-1.128
290	902	-.219	.300	.733	-1.418
290	903	-.091	.224	.585	-1.425
290	904	-.421	.138	-.004	-1.145
290	905	-.576	.166	.378	-1.286
290	906	-.425	.129	-.037	-.896
290	907	-.473	.135	.087	-1.050
290	908	-.407	.138	.136	-.850
290	909	-.536	.142	.023	-1.011
290	910	-.456	.161	.180	-1.068
290	911	-.463	.111	-.128	-.841
290	912	-.401	.132	.022	-1.014
290	913	-.493	.155	.062	-1.172
290	914	-.428	.130	-.021	-.920
290	915	-.428	.121	-.029	-.815

APPENDIX A -- PRESSURE DATA: CONFIGURATION A; HOUSTON NATIONAL BANK

WD	TAP	CPMEAN	CPRMS	CPMAX	CPMIN
300	1	-.074	.129	.424	-.512
300	2	-.107	.126	.363	-.576
300	3	-.414	.123	-.014	-.798
300	4	-.502	.142	-.089	-1.036
300	5	.366	.183	1.045	-.284
300	6	.287	.158	.863	-.232
300	7	-.398	.119	-.024	-.871
300	8	-.417	.120	-.028	-.817
300	9	-.108	.146	.390	-.623
300	10	-.001	.143	.506	-.469
300	11	-.428	.126	.049	-.845
300	12	-.416	.133	.039	-1.018
300	13	-.351	.109	.106	-.714
300	14	-.341	.103	.002	-.709
300	15	.073	.174	.666	-.527
300	16	.161	.193	.815	-.460
300	17	-.345	.115	.053	-.774
300	18	-.371	.103	-.028	-.704
300	19	.275	.192	1.036	-.294
300	20	.315	.178	.952	-.236
300	21	-.378	.117	.010	-.784
300	22	-.352	.110	.005	-.773
300	23	-.113	.133	.459	-.509
300	24	-.132	.130	.342	-.576
300	25	-.344	.130	.041	-.821
300	26	-.359	.099	.031	-.705
300	27	-.311	.164	.346	-.809
300	28	-.143	.178	.397	-.831
300	29	-.375	.116	.069	-.812
300	30	-.362	.117	.055	-.850
300	31	-.170	.218	.634	-.946
300	32	-.055	.132	.511	-.492
300	101	-.433	.127	.018	-.904
300	102	-.423	.132	.112	-.884
300	103	-.517	.161	.037	-1.192
300	104	-.542	.157	-.005	-1.118
300	105	-.568	.166	-.063	-1.134
300	106	-.380	.120	.079	-.849
300	107	-.546	.179	-.050	-1.476
300	108	-.526	.172	.042	-1.318
300	109	-.374	.099	-.027	-.751
300	110	-.335	.108	.064	-.712
300	111	-.336	.109	.057	-.717
300	112	-.316	.109	.077	-.697
300	113	-.311	.160	.156	-.912
300	114	-.174	.139	.272	-.791
300	115	-.081	.133	.428	-.581
300	116	-.329	.117	.024	-.746
300	117	-.345	.098	-.008	-.701
300	118	-.313	.114	.099	-.717
300	119	-.330	.113	.094	-.719
300	120	-.314	.111	.113	-.716
300	121	-.339	.097	-.036	-.657
300	122	-.320	.113	.032	-.727
300	123	-.330	.116	.052	-.710
300	124	.177	.171	.780	-.477
300	125	-.185	.165	.342	-.851
300	126	-.101	.168	.461	-.761
300	127	-.345	.106	.054	-.684
300	128	-.330	.104	.063	-.681
300	129	-.355	.105	-.005	-.752
300	130	-.314	.119	.055	-.735
300	131	-.310	.121	.069	-.726
300	132	.097	.210	.707	-.682
300	133	.114	.184	.720	-.665
300	134	-.351	.115	.047	-.965
300	135	-.362	.118	.109	-.888
300	136	-.348	.114	.049	-.780
300	137	-.347	.107	-.060	-.888
300	138	-.321	.119	.018	-.822
300	139	-.325	.123	.043	-.795
300	140	-.289	.120	.094	-.744
300	141	-.337	.104	.014	-.751
300	142	-.348	.120	.047	-.937
300	143	-.350	.118	.062	-.910
300	144	-.334	.114	.108	-.702
300	145	-.355	.114	.017	-.832
300	146	-.310	.130	.097	-.901
300	147	-.299	.127	.107	-.817
300	148	-.396	.157	.064	-1.051
300	149	-.377	.099	-.113	-.871
300	150	-.350	.128	.032	-1.047
300	151	-.340	.111	.000	-.722
300	152	-.324	.108	.015	-.685
300	153	-.337	.102	-.038	-.751
300	154	-.335	.127	.052	-.949
300	155	-.344	.118	.000	-.795
300	156	-.225	.172	.440	-.783
300	157	-.362	.132	.034	-.891
300	158	-.305	.144	.149	-.908
300	159	-.340	.113	.046	-.794
300	160	-.331	.111	.035	-.792
300	161	-.403	.125	.018	-.959
300	162	-.332	.119	.147	-.873
300	163	-.319	.120	.138	-.833
300	164	-.195	.174	.480	-.805
300	165	-.210	.158	.300	-.849
300	166	-.416	.147	.006	-1.121
300	167	-.454	.156	-.018	-1.480
300	168	-.428	.140	-.026	-.994
300	169	-.399	.119	-.016	-.840
300	170	-.360	.130	.076	-.837
300	171	-.361	.128	.121	-1.076
300	172	-.346	.126	.184	-.802
300	173	-.371	.103	.014	-.723
300	174	-.445	.141	.010	-.975
300	175	-.445	.132	-.010	-.951
300	176	-.437	.132	-.047	-.939
300	177	-.487	.120	-.095	-1.021
300	178	-.460	.133	-.003	-1.068
300	179	-.492	.135	-.015	-1.068
300	180	-.453	.130	.003	-1.007
300	181	-.438	.124	-.030	-.941
300	182	-.394	.132	.049	-1.044
300	183	-.418	.146	.034	-1.004
300	184	-.394	.143	.058	-1.008
300	185	-.262	.151	.183	-1.079
300	186	-.247	.170	.256	-.917
300	187	-.338	.183	.292	-1.142
300	188	-.379	.177	.212	-1.288
300	189	-.470	.149	.114	-1.390
300	190	-.455	.173	.036	-1.290
300	191	-.493	.168	-.002	-1.324
300	201	-.304	.142	.283	-.828
300	202	-.274	.123	.178	-.677
300	203	-.183	.154	.677	-.720
300	204	-.243	.170	.460	-.889
300	205	-.234	.215	.842	-.811
300	206	.135	.145	.688	-.444
300	207	.328	.187	1.091	-.321
300	208	.471	.225	1.395	-.210
300	209	.452	.203	1.340	-.201
300	210	.317	.160	.917	-.248
300	211	.116	.161	.698	-.426
300	212	.260	.175	.908	-.366
300	213	.504	.195	1.248	-.112
300	214	.360	.156	.921	-.145
300	215	.189	.169	.806	-.349
300	216	-.352	.136	.188	-.860
300	217	-.255	.153	.428	-.737
300	218	-.271	.179	.626	-.848
300	219	-.268	.142	.270	-.797
300	220	.155	.184	.795	-.393
300	221	.253	.193	.858	-.297
300	222	.440	.175	.946	-.032
300	223	.347	.183	.942	-.203
300	224	.174	.178	.724	-.377
300	225	.055	.149	.776	-.509
300	226	.184	.153	.844	-.251
300	227	.391	.221	1.196	-.267

APPENDIX A -- PRESSURE DATA: CONFIGURATION A; HOUSTON NATIONAL BANK

WD	TAP	CPMEAN	CPRMS	CPMAX	CPMIN
300	228	.113	.191	.783	-.483
300	229	.213	.185	.859	-.343
300	230	.299	.154	.914	-.298
300	231	.459	.191	1.093	-.167
300	232	.297	.182	.995	-.247
300	233	.122	.171	.793	-.376
300	234	-.016	.123	.450	-.368
300	235	.136	.156	.752	-.352
300	236	.306	.192	1.054	-.255
300	237	.135	.206	.893	-.544
300	238	-.050	.119	.359	-.444
300	239	.109	.152	.596	-.357
300	240	.298	.183	.840	-.406
300	241	.387	.184	.968	-.108
300	242	.463	.170	.995	-.004
300	243	.276	.175	.954	-.284
300	244	.098	.174	.756	-.411
300	245	-.251	.207	.595	-1.147
300	246	-.298	.149	.295	-.706
300	247	-.351	.116	.097	-.755
300	248	.050	.216	.883	-.635
300	249	.122	.259	1.092	-.694
300	250	-.299	.153	.314	-.921
300	251	-.032	.138	.431	-.516
300	252	.059	.147	.628	-.447
300	253	.298	.157	.927	-.225
300	254	.327	.160	.911	-.065
300	255	.360	.182	1.117	-.110
300	256	.181	.177	.985	-.391
300	257	.030	.172	.687	-.566
300	258	.006	.121	.498	-.376
300	259	.187	.164	.908	-.331
300	260	-.313	.179	.430	-1.148
300	261	-.131	.143	.414	-.748
300	262	-.040	.139	.483	-.537
300	263	.117	.159	.709	-.387
300	264	.192	.159	.727	-.315
300	265	.238	.157	.779	-.248
300	266	.279	.169	.903	-.149
300	267	.202	.172	.786	-.379
300	268	.051	.183	.752	-.672
300	269	-.244	.138	.248	-.660
300	270	-.162	.136	.345	-.627
300	271	.049	.151	.583	-.492
300	272	.077	.144	.586	-.378
300	273	.106	.145	.580	-.335
300	274	.087	.114	.526	-.330
300	275	.128	.147	.710	-.350
300	276	.076	.163	.698	-.463
300	277	.078	.130	.531	-.335
300	278	.063	.123	.506	-.352
300	279	.088	.127	.555	-.303
300	280	-.200	.133	.267	-.675
300	281	-.125	.139	.454	-.559
300	282	.067	.146	.568	-.397
300	283	.149	.168	.657	-.401
300	284	.167	.183	.861	-.397
300	285	.172	.180	.830	-.385
300	286	.095	.135	.619	-.324
300	287	.017	.155	.630	-.582
300	288	-.036	.172	.627	-.666
300	301	-.479	.157	.076	-1.088
300	302	-.608	.168	-.094	-1.492
300	303	-.497	.182	.109	-1.254
300	304	-.705	.241	-.116	-1.686
300	305	-.450	.176	.051	-1.282
300	306	-.929	.284	-.064	-2.097
300	307	-.462	.213	.096	-1.186
300	308	-.397	.147	.233	-1.024
300	309	-1.032	.432	.094	-2.914
300	310	-.912	.323	-.060	-2.635
300	311	-.680	.247	.077	-1.873
300	312	-.513	.253	.125	-1.570
300	313	-.373	.203	.135	-1.142
300	314	-.397	.154	.086	-1.033
300	315	-.347	.139	.116	-.947
300	316	-.371	.137	.083	-.948
300	317	-.659	.206	.054	-1.484
300	318	-.771	.202	.268	-1.462
300	319	-.666	.285	.374	-1.611
300	320	-.554	.305	.309	-1.864
300	321	-.424	.257	.402	-1.662
300	322	-.371	.175	.188	-1.116
300	323	-.386	.162	.123	-1.417
300	324	-.648	.252	.381	-1.947
300	325	-.646	.264	.368	-1.901
300	326	-.655	.308	.188	-1.620
300	327	-.444	.310	.209	-1.692
300	328	-.369	.247	.242	-1.433
300	329	-.342	.182	.191	-1.268
300	330	-.418	.157	.143	-1.527
300	331	-.605	.268	.240	-1.563
300	332	-.614	.300	.304	-1.635
300	333	-.428	.350	.361	-1.828
300	334	-.368	.230	.193	-1.553
300	335	-.280	.192	.282	-1.707
300	336	-.318	.151	.200	-1.476
300	337	-.336	.145	.164	-1.409
300	338	-.651	.271	.098	-1.723
300	339	-.546	.335	.289	-1.957
300	340	-.313	.300	.376	-1.660
300	341	-.240	.193	.271	-1.417
300	342	-.336	.142	.070	-1.065
300	343	-.333	.131	.070	-.907
300	344	-.377	.131	.032	-.928
300	345	-.398	.346	.509	-1.999
300	346	-.299	.274	.310	-1.780
300	347	-.127	.153	.452	-.888
300	348	-.173	.133	.378	-.636
300	349	-.224	.127	.233	-.635
300	350	-.335	.111	.129	-.788
300	351	-.404	.121	.029	-.853
300	352	-.231	.117	.200	-.680
300	353	-.337	.128	.214	-.802
300	354	-.189	.115	.204	-.545
300	355	-.196	.123	.240	-.585
300	356	-.249	.196	.540	-.823
300	357	-.249	.203	.557	-.898
300	358	-.132	.145	.383	-.552
300	359	-.130	.136	.384	-.559
300	360	-.151	.129	.306	-.558
300	361	-.166	.127	.328	-.563
300	362	-.149	.114	.323	-.533
300	401	-.382	.123	.022	-.845
300	402	-.382	.120	.027	-.831
300	403	-.376	.118	-.011	-.793
300	404	-.400	.120	-.022	-.860
300	405	-.406	.134	-.002	-.970
300	406	-.421	.144	.030	-.945
300	407	-.408	.139	.044	-.886
300	408	-.377	.106	-.036	-.761
300	409	-.507	.150	-.081	-1.080
300	410	-.520	.149	-.077	-1.181
300	411	-.400	.131	.006	-.999
300	412	-.379	.115	.003	-.777
300	413	-.397	.121	.036	-.818
300	414	-.397	.130	-.018	-.840
300	415	-.428	.141	.051	-.935
300	416	-.363	.107	.007	-.802
300	417	-.357	.127	.038	-.901
300	418	-.399	.112	.008	-.776
300	419	-.395	.116	.008	-.782
300	420	-.397	.117	.066	-.859
300	421	-.345	.117	.090	-.843
300	422	-.358	.116	.093	-.829
300	423	-.356	.120	.089	-.796
300	424	-.338	.123	.080	-.757
300	425	-.357	.127	.126	-.845
300	426	-.366	.110	.003	-.803
300	427	-.370	.118	.109	-.750

APPENDIX A -- PRESSURE DATA: CONFIGURATION A; HOUSTON NATIONAL BANK

WD	TAP	CPMEAN	CPRMS	CPMAX	CPMIN
300	428	-.370	.106	-.033	-.714
300	429	-.392	.121	-.018	-.842
300	430	-.349	.110	-.004	-.719
300	431	-.352	.115	.038	-.756
300	432	-.307	.111	.169	-.731
300	433	-.326	.123	.205	-.819
300	434	-.344	.122	.094	-.766
300	435	-.344	.126	.115	-.776
300	436	-.324	.104	.060	-.660
300	437	-.346	.115	.052	-.707
300	438	-.360	.133	.073	-.923
300	439	-.355	.126	.066	-.866
300	440	-.327	.103	.092	-.638
300	441	-.358	.113	.090	-.713
300	442	-.352	.114	.102	-.716
300	443	-.341	.116	.136	-.706
300	444	-.337	.115	.126	-.837
300	445	-.317	.120	.080	-.753
300	446	-.326	.126	.087	-.743
300	447	-.329	.129	.116	-.733
300	448	-.330	.126	.066	-.919
300	449	-.357	.127	.079	-.845
300	450	-.372	.122	.050	-.814
300	451	-.382	.121	.023	-.811
300	452	-.368	.104	-.008	-.797
300	453	-.390	.123	.048	-.860
300	454	-.394	.125	.015	-.854
300	455	-.344	.117	.121	-.810
300	456	-.298	.104	.035	-.837
300	457	-.330	.123	.041	-1.057
300	458	-.349	.123	.091	-.860
300	459	-.358	.129	.046	-.928
300	460	-.324	.124	.100	-.827
300	461	-.369	.139	.134	-.865
300	462	-.379	.134	.108	-.788
300	463	-.407	.130	-.024	-.827
300	464	-.421	.115	-.086	-.804
300	465	-.389	.127	-.009	-.821
300	466	-.354	.124	.068	-.754
300	467	-.357	.129	.067	-.852
300	468	-.377	.112	.029	-.842
300	469	-.437	.135	.018	-.940
300	470	-.435	.132	-.002	-.916
300	471	-.466	.136	-.015	-.967
300	472	-.466	.115	-.047	-.830
300	473	-.408	.126	.037	-.797
300	474	-.385	.124	.054	-.750
300	475	-.384	.130	.027	-.853
300	476	-.415	.121	-.041	-.903
300	477	-.455	.146	.039	-1.057

WD	TAP	CPMEAN	CPRMS	CPMAX	CPMIN
300	478	-.455	.139	-.029	-.983
300	479	-.457	.135	-.063	-.975
300	480	-.420	.111	-.060	-.887
300	481	-.388	.121	.012	-.855
300	483	-.394	.132	.038	-1.034
300	484	-.411	.105	-.083	-.910
300	485	-.166	.109	.301	-.554
300	486	-.217	.142	.243	-.700
300	501	-.303	.130	.114	-.881
300	502	-.286	.141	.195	-.789
300	503	-.327	.144	.159	-1.042
300	504	-.322	.149	.225	-.783
300	505	-.163	.122	.199	-.641
300	506	-.160	.145	.253	-.723
300	507	-.409	.182	.274	-1.037
300	508	-.288	.164	.216	-.900
300	509	-.275	.144	.154	-.925
300	510	-.107	.128	.390	-.679
300	511	-.238	.146	.221	-.905
300	512	-.196	.160	.392	-.940
300	601	-.405	.145	.261	-1.154
300	602	-.423	.115	-.040	-.789
300	603	-.453	.129	-.026	-.903
300	604	-.627	.153	-.092	-1.231
300	605	.114	.232	.990	-1.065
300	606	-.442	.141	.225	-1.187
300	607	-.391	.133	.047	-.881
300	608	-.053	.219	.786	-1.367
300	609	-.401	.157	.255	-1.015
300	610	-.394	.114	.010	-.805
300	611	-.359	.124	.050	-.807
300	612	-.586	.151	-.117	-1.170
300	613	.004	.158	.545	-.828
300	614	-.232	.156	.376	-1.046
300	615	-.045	.133	.472	-.471
300	701	-.225	.171	.343	-1.013
300	702	-.374	.112	-.007	-.749
300	703	-.117	.134	.314	-.577
300	704	-.475	.131	-.060	-.940
300	705	-.091	.132	.487	-.577
300	706	-.214	.129	.206	-.639
300	707	-.312	.126	.105	-.741
300	708	-.274	.148	.236	-.776
300	709	-.158	.137	.302	-.618
300	710	-.213	.108	.235	-.563
300	711	-.176	.108	.233	-.541
300	712	-.442	.129	-.016	-.876
300	801	-.474	.119	-.085	-.958
300	802	-.443	.128	-.070	-.903
300	803	-.545	.140	-.049	-1.106

WD	TAP	CPMEAN	CPRMS	CPMAX	CPMIN
300	804	-.341	.127	.122	-.744
300	805	-.356	.123	.156	-.750
300	806	-.472	.142	-.024	-.967
300	807	-.553	.155	-.060	-1.138
300	808	-.263	.151	.410	-.752
300	809	-.490	.131	-.085	-.925
300	810	-.461	.140	.003	-.942
300	811	-.481	.181	.067	-1.165
300	812	-.324	.169	.194	-1.162
300	813	-.256	.159	.252	-.825
300	814	-.393	.126	-.016	-.948
300	815	-.622	.150	-.120	-1.321
300	816	-.234	.143	.213	-.739
300	817	-.220	.110	.164	-.827
300	818	-.140	.147	.360	-1.169
300	819	-.498	.145	.057	-.991
300	820	-.407	.147	.177	-.882
300	821	-.204	.121	.199	-.596
300	822	-.133	.127	.280	-.600
300	823	-.249	.150	.394	-.891
300	901	-.573	.147	-.017	-1.052
300	902	-.246	.296	.658	-1.277
300	903	-.093	.211	.453	-1.154
300	904	-.419	.134	-.013	-.936
300	905	-.607	.158	-.107	-1.208
300	906	-.417	.124	.001	-.897
300	907	-.478	.157	-.023	-1.130
300	908	-.371	.135	.018	-.907
300	909	-.512	.141	-.085	-1.049
300	910	-.459	.188	.051	-1.360
300	911	-.424	.121	-.047	-.860
300	912	-.372	.139	.042	-1.103
300	913	-.395	.170	.148	-.993
300	914	-.417	.148	.076	-1.341
300	915	-.424	.144	-.012	-1.097
310	1	.007	.140	.491	-.462
310	2	-.017	.131	.448	-.451
310	3	-.402	.123	.000	-.858
310	4	-.521	.153	-.076	-1.033
310	5	.361	.185	1.010	-.204
310	6	.290	.165	.827	-.215
310	7	-.367	.116	-.001	-.753
310	8	-.390	.117	-.022	-.766
310	9	-.158	.128	.281	-.628
310	10	-.045	.132	.494	-.483
310	11	-.390	.123	-.022	-.855
310	12	-.419	.145	.044	-1.082
310	13	-.331	.112	.113	-.704
310	14	-.304	.099	.040	-.640
310	15	.161	.171	.783	-.428

APPENDIX A -- PRESSURE DATA: CONFIGURATION A; HOUSTON NATIONAL BANK

WD	TAP	CPMEAN	CPRMS	CPMAX	CPMIN
310	16	.237	.184	.867	-.498
310	17	-.343	.116	.060	-.919
310	18	-.313	.098	.025	-.682
310	19	.258	.187	.893	-.339
310	20	.323	.183	1.043	-.295
310	21	-.362	.119	.039	-.796
310	22	-.318	.109	.043	-.693
310	23	-.078	.138	.388	-.603
310	24	-.094	.141	.401	-.620
310	25	-.348	.134	.127	-.847
310	26	-.314	.101	.028	-.628
310	27	-.097	.177	.599	-.667
310	28	.022	.184	.693	-.651
310	29	-.386	.127	.036	-.877
310	30	-.336	.110	.005	-.832
310	31	-.011	.174	.595	-.831
310	32	-.048	.127	.382	-.654
310	101	-.421	.134	-.026	-1.264
310	102	-.421	.143	.051	-.934
310	103	-.516	.168	.003	-1.128
310	104	-.452	.155	.050	-.986
310	105	-.678	.163	-.049	-1.316
310	106	-.381	.123	.040	-.841
310	107	-.403	.180	.053	-1.410
310	108	-.480	.170	-.031	-1.170
310	109	-.367	.111	-.046	-.900
310	110	-.335	.117	.052	-.791
310	111	-.337	.117	.034	-.796
310	112	-.310	.117	.068	-.755
310	113	-.100	.159	.374	-.704
310	114	-.027	.151	.567	-.505
310	115	.029	.145	.608	-.482
310	116	-.299	.117	.075	-.831
310	117	-.344	.107	-.003	-.753
310	118	-.324	.128	.078	-.838
310	119	-.322	.118	.039	-.734
310	120	-.307	.117	.056	-.734
310	121	-.349	.108	-.000	-.742
310	122	-.340	.127	.075	-.815
310	123	-.363	.140	.070	-1.029
310	124	.297	.162	1.040	-.215
310	125	.052	.181	.635	-.625
310	126	.098	.182	.687	-.545
310	127	-.344	.122	.181	-.838
310	128	-.336	.119	.198	-.814
310	129	-.397	.123	.046	-.873
310	130	-.369	.146	.177	-.868
310	131	-.375	.160	.176	-.970
310	132	.266	.204	.966	-.471
310	133	.252	.180	.833	-.302
310	134	-.363	.140	.086	-.965
310	135	-.344	.148	.151	-1.088
310	136	-.326	.144	.300	-.908
310	137	-.349	.126	.053	-.850
310	138	-.388	.163	.106	-1.069
310	139	-.404	.176	.080	-1.256
310	140	-.279	.136	.178	-.759
310	141	-.292	.129	.137	-1.177
310	142	-.349	.138	.135	-1.134
310	143	-.355	.134	.043	-1.173
310	144	-.334	.129	.117	-1.051
310	145	-.395	.152	.188	-1.036
310	146	-.315	.161	.212	-1.080
310	147	-.279	.150	.251	-.921
310	148	-.390	.172	.036	-1.671
310	149	-.433	.124	-.130	-.982
310	150	-.414	.164	.035	-1.384
310	151	-.372	.129	.030	-.932
310	152	-.361	.126	.047	-.939
310	153	-.370	.111	-.030	-.732
310	154	-.423	.164	.106	-1.263
310	155	-.409	.142	.022	-1.073
310	156	-.042	.204	.957	-.661
310	157	-.339	.166	.208	-.897
310	158	-.247	.177	.375	-.891
310	159	-.407	.142	.059	-1.007
310	160	-.391	.137	.042	-1.011
310	161	-.475	.152	.170	-1.072
310	162	-.419	.144	.009	-1.248
310	163	-.417	.150	-.012	-1.395
310	164	-.054	.194	.645	-.748
310	165	-.094	.166	.447	-.721
310	166	-.443	.171	.201	-1.237
310	167	-.448	.173	.142	-1.305
310	168	-.436	.164	.094	-1.158
310	169	-.431	.137	-.007	-.868
310	170	-.412	.148	.067	-.949
310	171	-.423	.144	.070	-.935
310	172	-.422	.141	.044	-.951
310	173	-.506	.171	-.109	-1.348
310	174	-.375	.157	.109	-.963
310	175	-.377	.162	.091	-1.011
310	176	-.402	.168	.135	-.990
310	177	-.458	.154	.006	-1.070
310	178	-.456	.168	.031	-1.169
310	179	-.478	.161	.021	-1.321
310	180	-.444	.155	.046	-1.093
310	181	-.289	.121	.132	-.719
310	182	-.217	.126	.221	-.702
310	183	-.195	.144	.291	-.695
310	184	-.177	.147	.321	-.680
310	185	-.097	.114	.239	-.705
310	186	-.084	.133	.341	-.747
310	187	-.145	.159	.393	-.754
310	188	-.238	.189	.380	-.960
310	189	-.472	.186	.080	-1.554
310	190	-.505	.197	.163	-1.743
310	191	-.526	.189	.120	-1.462
310	201	-.287	.153	.272	-.826
310	202	-.226	.128	.384	-.624
310	203	-.161	.154	.512	-.732
310	204	-.236	.155	.354	-.773
310	205	-.276	.162	.426	-.773
310	206	.209	.157	.898	-.268
310	207	.371	.199	1.204	-.184
310	208	.437	.216	1.394	-.188
310	209	.354	.200	1.080	-.300
310	210	.210	.152	.811	-.307
310	211	.203	.162	.782	-.288
310	212	.311	.174	.943	-.195
310	213	.433	.187	1.117	-.165
310	214	.230	.138	.814	-.233
310	215	.074	.149	.685	-.420
310	216	-.276	.149	.447	-.796
310	217	-.183	.163	.606	-.750
310	218	-.201	.160	.696	-.654
310	219	-.199	.143	.421	-.622
310	220	.274	.172	.911	-.269
310	221	.350	.175	.974	-.153
310	222	.428	.160	.961	-.096
310	223	.266	.171	.880	-.369
310	224	.087	.164	.659	-.517
310	225	.116	.155	.709	-.403
310	226	.234	.153	.798	-.348
310	227	.412	.200	1.196	-.299
310	228	.245	.187	1.073	-.368
310	229	.335	.181	1.035	-.276
310	230	.366	.162	.988	-.086
310	231	.440	.186	1.166	-.142
310	232	.210	.167	.810	-.263
310	233	.031	.154	.566	-.440
310	234	.058	.125	.623	-.393
310	235	.221	.153	.829	-.313
310	236	.382	.165	.943	-.146
310	237	.329	.181	.941	-.380
310	238	.049	.131	.593	-.406
310	239	.180	.163	.761	-.392
310	240	.310	.175	.906	-.244
310	241	.370	.169	.914	-.154
310	242	.367	.160	.948	-.120

APPENDIX A -- PRESSURE DATA: CONFIGURATION A; HOUSTON NATIONAL BANK

WD	TAP	CPMEAN	CPRMS	CPMAX	CPMIN
310	243	.193	.153	.682	-.275
310	244	-.015	.157	.542	-.531
310	245	.032	.265	.929	-.738
310	246	-.009	.223	.712	-.603
310	247	-.246	.139	.235	-.823
310	248	.140	.172	.948	-.456
310	249	.278	.203	1.000	-.526
310	250	-.094	.197	.563	-.748
310	251	.053	.159	.592	-.452
310	252	.135	.164	.728	-.328
310	253	.318	.164	.866	-.143
310	254	.391	.151	.864	-.057
310	255	.394	.172	.948	-.134
310	256	.157	.165	.723	-.357
310	257	-.026	.160	.598	-.597
310	258	.017	.121	.520	-.378
310	259	.172	.156	.963	-.356
310	260	-.139	.189	.452	-1.155
310	261	-.073	.144	.449	-.597
310	262	.094	.144	.560	-.429
310	263	.227	.164	.803	-.333
310	264	.278	.156	.760	-.220
310	265	.291	.152	.773	-.183
310	266	.330	.141	.842	-.075
310	267	.133	.149	.864	-.333
310	268	-.047	.152	.685	-.569
310	269	-.180	.143	.352	-.628
310	270	-.014	.130	.467	-.440
310	271	.127	.149	.711	-.363
310	272	.141	.137	.710	-.320
310	273	.146	.137	.658	-.272
310	274	.171	.116	.593	-.191
310	275	.089	.148	.667	-.445
310	276	.006	.163	.601	-.615
310	277	.159	.140	.662	-.221
310	278	.180	.117	.590	-.177
310	279	.139	.127	.630	-.275
310	280	-.177	.131	.297	-.839
310	281	-.087	.143	.499	-.581
310	282	.230	.136	.721	-.160
310	283	.242	.150	.727	-.218
310	284	.254	.155	.728	-.260
310	285	.265	.157	.756	-.221
310	286	.226	.134	.686	-.140
310	287	.017	.130	.467	-.491
310	288	-.053	.131	.432	-.524
310	301	-.407	.139	.041	-1.053
310	302	-.397	.129	-.003	-.951
310	303	-.440	.155	.040	-1.173
310	304	-.466	.164	.080	-1.609
310	305	-.480	.177	.055	-1.375
310	306	-.678	.277	-.122	-2.579
310	307	-.523	.188	.029	-1.478
310	308	-.470	.192	.210	-1.571
310	309	-.721	.369	.004	-2.404
310	310	-.664	.254	-.068	-2.329
310	311	-.623	.212	-.026	-1.538
310	312	-.601	.199	-.013	-1.459
310	313	-.521	.192	.035	-1.385
310	314	-.413	.154	-.014	-1.028
310	315	-.387	.168	.062	-1.140
310	316	-.394	.175	.074	-1.212
310	317	-.533	.187	-.006	-1.295
310	318	-.547	.158	-.098	-1.181
310	319	-.581	.204	-.017	-1.551
310	320	-.568	.211	.083	-1.555
310	321	-.500	.206	.107	-1.408
310	322	-.423	.191	.199	-1.245
310	323	-.391	.180	.137	-1.215
310	324	-.574	.185	-.051	-1.640
310	325	-.575	.187	-.044	-1.521
310	326	-.597	.195	-.067	-1.904
310	327	-.562	.236	.167	-1.685
310	328	-.505	.239	.173	-1.677
310	329	-.450	.230	.188	-1.546
310	330	-.461	.205	.039	-1.745
310	331	-.624	.205	.031	-1.658
310	332	-.641	.215	.102	-1.893
310	333	-.607	.243	.254	-1.680
310	334	-.518	.238	.184	-1.355
310	335	-.452	.253	.214	-1.489
310	336	-.406	.226	.209	-1.376
310	337	-.409	.229	.150	-2.005
310	338	-.627	.195	-.076	-1.652
310	339	-.637	.241	.164	-1.858
310	340	-.544	.309	.348	-1.841
310	341	-.442	.284	.357	-1.845
310	342	-.370	.196	.134	-1.356
310	343	-.349	.182	.281	-1.125
310	344	-.363	.178	.257	-1.516
310	345	-.614	.321	.392	-2.854
310	346	-.536	.303	.382	-1.973
310	347	-.302	.255	.404	-1.352
310	348	-.224	.163	.558	-.936
310	349	-.233	.132	.283	-.687
310	350	-.297	.116	.098	-.896
310	351	-.385	.131	.075	-.984
310	352	-.256	.100	.074	-.555
310	353	-.326	.122	.082	-.751
310	354	-.162	.103	.247	-.525
310	355	-.187	.114	.225	-.572
310	356	-.303	.136	.169	-.898
310	357	-.321	.146	.156	-.945
310	358	-.172	.146	.377	-.922
310	359	-.134	.127	.378	-.685
310	360	-.133	.115	.328	-.590
310	361	-.143	.116	.295	-.529
310	362	-.140	.105	.267	-.484
310	401	-.379	.124	.032	-.780
310	402	-.376	.123	.039	-.776
310	403	-.385	.124	.086	-.800
310	404	-.355	.121	.017	-.892
310	405	-.387	.138	.020	-1.015
310	406	-.392	.137	.036	-1.001
310	407	-.377	.133	.050	-.971
310	408	-.346	.112	-.004	-.705
310	409	-.526	.171	-.052	-1.259
310	410	-.518	.166	-.048	-1.206
310	411	-.419	.151	.006	-1.101
310	412	-.349	.114	.135	-.815
310	413	-.384	.116	.101	-.779
310	414	-.394	.128	.132	-.864
310	415	-.412	.141	.032	-1.000
310	416	-.344	.129	.038	-.869
310	417	-.361	.123	.031	-.781
310	418	-.381	.125	.044	-.874
310	419	-.376	.127	-.001	-.863
310	420	-.341	.115	.048	-.962
310	421	-.322	.118	.081	-.740
310	422	-.330	.120	.069	-.748
310	423	-.332	.124	.097	-.803
310	424	-.331	.115	.075	-.809
310	425	-.405	.148	.075	-.979
310	426	-.340	.117	.032	-.880
310	427	-.387	.119	.102	-.821
310	428	-.317	.111	.037	-.718
310	429	-.364	.127	.059	-.862
310	430	-.330	.120	.057	-.736
310	431	-.336	.128	.068	-.836
310	432	-.301	.107	.040	-.766
310	433	-.349	.121	.048	-.881
310	434	-.346	.120	.282	-.779
310	435	-.370	.126	.088	-.872
310	436	-.336	.136	.083	-.933
310	437	-.392	.146	.075	-1.112
310	438	-.395	.161	.121	-1.036
310	439	-.383	.146	.114	-.900
310	440	-.358	.115	.035	-.764
310	441	-.396	.124	.053	-.860
310	442	-.392	.121	.056	-.850

APPENDIX A -- PRESSURE DATA: CONFIGURATION A; HOUSTON NATIONAL BANK

WD	TAP	CPMEAN	CPRMS	CPMAX	CPMIN
310	443	-.393	.133	.103	-1.063
310	444	-.323	.123	.049	-.798
310	445	-.338	.124	.118	-.772
310	446	-.324	.127	.132	-.776
310	447	-.329	.131	.127	-.844
310	448	-.330	.153	.106	-1.005
310	449	-.371	.147	.135	-.953
310	450	-.369	.138	.042	-.994
310	451	-.356	.137	.103	-.989
310	452	-.295	.113	.117	-.751
310	453	-.332	.130	.139	-.834
310	454	-.341	.129	.069	-.830
310	455	-.351	.132	.082	-.907
310	456	-.296	.118	.088	-.778
310	457	-.351	.140	.101	-.982
310	458	-.400	.156	.186	-.962
310	459	-.401	.155	.152	-.980
310	460	-.339	.131	.104	-.786
310	461	-.335	.157	.164	-.946
310	462	-.342	.149	.153	-.887
310	463	-.381	.142	.123	-.983
310	464	-.364	.115	.006	-.792
310	465	-.354	.123	.108	-.886
310	466	-.357	.126	.056	-.952
310	467	-.400	.140	.053	-1.064
310	468	-.382	.120	.062	-.934
310	469	-.382	.146	.113	-.936
310	470	-.388	.142	.096	-.855
310	471	-.423	.167	.419	-1.034
310	472	-.380	.149	.099	-.924
310	473	-.356	.141	.210	-.885
310	474	-.363	.142	.349	-.896
310	475	-.428	.147	.030	-.974
310	476	-.421	.131	-.005	-1.039
310	477	-.432	.157	.034	-1.119
310	478	-.459	.167	.090	-1.182
310	479	-.452	.148	.036	-1.022
310	480	-.338	.113	.045	-.739
310	481	-.327	.121	.102	-.761
310	483	-.378	.155	.074	-1.120
310	484	-.400	.136	-.012	-1.006
310	485	-.163	.109	.233	-.486
310	486	-.059	.123	.448	-.585
310	501	-.175	.125	.411	-.703
310	502	-.099	.172	.511	-.767
310	503	-.275	.138	.337	-.755
310	504	-.114	.177	.562	-.749
310	505	-.107	.123	.331	-.583
310	506	-.035	.124	.423	-.640
310	507	-.212	.201	.561	-.973

WD	TAP	CPMEAN	CPRMS	CPMAX	CPMIN
310	508	-.137	.150	.437	-.694
310	509	-.086	.102	.241	-.445
310	510	-.098	.126	.309	-.583
310	511	-.154	.119	.269	-.552
310	512	-.065	.116	.375	-.476
310	601	-.392	.249	.512	-1.787
310	602	-.365	.117	.008	-.803
310	603	-.326	.131	.096	-1.016
310	604	-.642	.196	.003	-1.554
310	605	.076	.191	.832	-.744
310	606	-.373	.194	.353	-1.453
310	607	-.311	.129	.098	-.724
310	608	-.026	.199	.740	-1.283
310	609	-.282	.196	.418	-1.221
310	610	-.328	.119	.022	-.792
310	611	-.288	.121	.098	-.790
310	612	-.549	.168	.011	-1.329
310	613	-.016	.161	.576	-.905
310	614	-.035	.129	.403	-.573
310	615	-.059	.123	.375	-.557
310	701	-.188	.171	.452	-1.077
310	702	-.314	.127	.136	-.745
310	703	-.111	.138	.336	-.622
310	704	-.438	.151	.075	-.963
310	705	-.098	.133	.398	-.572
310	706	-.167	.121	.297	-.622
310	707	-.168	.162	.287	-.761
310	708	-.271	.134	.168	-.764
310	709	-.155	.126	.279	-.592
310	710	-.208	.107	.168	-.539
310	711	-.168	.114	.258	-.532
310	712	-.395	.157	.208	-.871
310	801	-.319	.159	.187	-.800
310	802	-.332	.163	.244	-.885
310	803	-.413	.170	.158	-1.006
310	804	-.281	.137	.234	-.825
310	805	-.281	.138	.157	-.712
310	806	-.353	.164	.286	-.956
310	807	-.393	.209	.282	-1.195
310	808	-.252	.161	.332	-.966
310	809	-.430	.171	.213	-1.146
310	810	-.424	.179	.188	-1.303
310	811	-.391	.197	.208	-1.085
310	812	-.242	.160	.236	-1.043
310	813	-.200	.161	.247	-.722
310	814	-.323	.153	.148	-1.065
310	815	-.565	.188	-.050	-1.469
310	816	-.142	.142	.398	-.592
310	817	-.230	.140	.168	-.691
310	818	-.125	.156	.367	-.685

WD	TAP	CPMEAN	CPRMS	CPMAX	CPMIN
310	819	-.393	.182	.188	-1.055
310	820	-.302	.181	.248	-1.029
310	821	-.125	.117	.254	-.486
310	822	-.142	.152	.455	-.912
310	823	-.255	.170	.247	-1.300
310	901	-.446	.209	.152	-1.235
310	902	-.145	.249	.574	-1.625
310	903	-.070	.181	.461	-1.156
310	904	-.400	.164	.077	-1.031
310	905	-.563	.196	.090	-1.390
310	906	-.359	.136	.074	-.797
310	907	-.451	.204	.163	-1.303
310	908	-.324	.144	.162	-.909
310	909	-.475	.145	-.035	-1.003
310	910	-.433	.199	.159	-1.418
310	911	-.345	.118	-.002	-.866
310	912	-.371	.167	.123	-1.438
310	913	-.371	.188	.426	-1.053
310	914	-.432	.225	.362	-1.594
310	915	-.514	.227	.286	-1.553
320	1	.135	.152	.668	-.385
320	2	.108	.134	.551	-.358
320	3	-.331	.122	.086	-.790
320	4	-.392	.139	.039	-.926
320	5	.318	.173	.925	-.186
320	6	.308	.161	.965	-.143
320	7	-.343	.116	.013	-.780
320	8	-.365	.113	.030	-.765
320	9	-.122	.117	.389	-.491
320	10	-.049	.114	.343	-.426
320	11	-.333	.115	.058	-.779
320	12	-.363	.129	.023	-.937
320	13	-.340	.112	.069	-.775
320	14	-.268	.099	.065	-.617
320	15	.274	.168	.855	-.250
320	16	.349	.173	.911	-.123
320	17	-.339	.119	.053	-.779
320	18	-.277	.100	.083	-.614
320	19	.299	.170	.893	-.224
320	20	.368	.170	.947	-.129
320	21	-.348	.126	.109	-.801
320	22	-.264	.096	.085	-.610
320	23	-.053	.126	.428	-.486
320	24	-.080	.132	.378	-.546
320	25	-.379	.131	.015	-.878
320	26	-.312	.111	.069	-.738
320	27	.072	.186	.781	-.563
320	28	.158	.185	.820	-.572
320	29	-.395	.142	.054	-.967
320	30	-.318	.111	.066	-.696

APPENDIX A -- PRESSURE DATA: CONFIGURATION A: HOUSTON NATIONAL BANK

WD	TAP	CPMEAN	CPRMS	CPMAX	CPMIN
320	31	-.035	.166	.585	-.550
320	32	-.053	.128	.443	-.543
320	101	-.492	.163	-.082	-1.302
320	102	-.384	.135	-.003	-1.005
320	103	-.400	.156	.071	-1.052
320	104	-.355	.136	.061	-.999
320	105	-.589	.190	.120	-1.306
320	106	-.342	.131	.097	-.816
320	107	-.212	.162	.258	-.964
320	108	-.274	.183	.438	-.960
320	109	-.343	.111	-.007	-.741
320	110	-.332	.118	.037	-.743
320	111	-.332	.119	.054	-.732
320	112	-.308	.120	.142	-.700
320	113	.070	.147	.652	-.519
320	114	.102	.160	.692	-.500
320	115	.132	.151	.711	-.397
320	116	-.321	.135	.096	-.897
320	117	-.361	.118	.014	-.778
320	118	-.341	.133	.061	-.844
320	119	-.334	.119	.026	-.788
320	120	-.327	.118	.025	-.794
320	121	-.351	.111	.011	-.754
320	122	-.328	.131	.126	-.902
320	123	-.449	.169	.020	-1.172
320	124	.392	.195	1.022	-.224
320	125	.249	.185	1.072	-.374
320	126	.262	.188	1.156	-.369
320	127	-.363	.139	.094	-.954
320	128	-.356	.136	.105	-.850
320	129	-.384	.133	.037	-.889
320	130	-.380	.173	.100	-1.035
320	131	-.449	.174	.053	-1.172
320	132	.402	.184	1.169	-.430
320	133	.395	.171	.944	-.242
320	134	-.361	.138	.067	-1.129
320	135	-.306	.141	.284	-1.028
320	136	-.291	.139	.142	-.958
320	137	-.296	.138	.164	-.845
320	138	-.431	.209	.184	-1.358
320	139	-.400	.207	.222	-1.290
320	140	-.210	.156	.245	-1.001
320	141	-.257	.145	.170	-.914
320	142	-.351	.157	.100	-1.163
320	143	-.361	.150	.083	-1.040
320	144	-.351	.144	.093	-1.248
320	145	-.346	.198	.317	-1.143
320	146	-.244	.198	.430	-1.193
320	147	-.216	.178	.533	-1.023
320	148	-.423	.212	.086	-2.220
320	149	-.469	.129	-.092	-.990
320	150	-.440	.165	.070	-1.132
320	151	-.391	.145	.044	-1.172
320	152	-.388	.144	.042	-1.016
320	153	-.360	.124	.009	-.869
320	154	-.407	.182	.098	-1.272
320	155	-.506	.226	-.051	-1.731
320	156	.116	.185	.852	-.497
320	157	-.183	.203	.437	-.858
320	158	-.101	.208	.583	-.769
320	159	-.427	.157	.005	-1.088
320	160	-.418	.156	.022	-1.051
320	161	-.524	.183	.204	-1.375
320	162	-.521	.176	.033	-1.272
320	163	-.564	.208	.026	-1.827
320	164	.068	.210	.706	-.891
320	165	.079	.172	.647	-.470
320	166	-.416	.191	.156	-1.330
320	167	-.385	.181	.116	-1.157
320	168	-.381	.180	.108	-1.025
320	169	-.458	.187	.048	-1.116
320	170	-.474	.200	.131	-1.135
320	171	-.524	.188	.103	-1.165
320	172	-.548	.181	.025	-1.251
320	173	-.611	.212	-.140	-1.677
320	174	-.344	.158	.086	-1.049
320	175	-.322	.171	.146	-1.073
320	176	-.333	.201	.289	-1.114
320	177	-.440	.162	.077	-1.064
320	178	-.479	.177	.187	-1.232
320	179	-.503	.166	.010	-1.298
320	180	-.472	.159	.023	-1.212
320	181	-.237	.118	.168	-.718
320	182	-.110	.114	.302	-.598
320	183	-.109	.125	.346	-.599
320	184	-.089	.126	.307	-.562
320	185	-.032	.095	.294	-.412
320	186	-.019	.112	.362	-.442
320	187	-.043	.130	.399	-.607
320	188	-.117	.184	.495	-.960
320	189	-.435	.200	.202	-1.359
320	190	-.489	.211	.071	-1.305
320	191	-.491	.202	.035	-1.224
320	201	-.249	.188	.986	-.866
320	202	-.203	.134	.304	-.657
320	203	-.159	.147	.568	-.672
320	204	-.245	.138	.360	-.810
320	205	-.288	.134	.470	-.775
320	206	.340	.161	1.050	-.269
320	207	.459	.202	1.348	-.240
320	208	.412	.206	1.122	-.237
320	209	.296	.180	.995	-.355
320	210	.160	.145	.752	-.335
320	211	.307	.176	.926	-.265
320	212	.384	.189	1.032	-.210
320	213	.420	.196	1.209	-.160
320	214	.249	.136	.668	-.247
320	215	.094	.143	.532	-.481
320	216	-.250	.163	.448	-.821
320	217	-.145	.171	.528	-.684
320	218	-.112	.153	.583	-.598
320	219	-.106	.169	.463	-.661
320	220	.356	.200	1.027	-.262
320	221	.400	.201	1.066	-.220
320	222	.389	.181	1.067	-.145
320	223	.195	.176	.918	-.361
320	224	.047	.160	.681	-.478
320	225	.159	.164	.917	-.356
320	226	.316	.152	.889	-.193
320	227	.430	.193	1.180	-.137
320	228	.365	.187	1.037	-.201
320	229	.428	.181	1.058	-.143
320	230	.456	.166	1.104	-.012
320	231	.436	.185	1.134	-.132
320	232	.157	.152	.731	-.352
320	233	-.015	.136	.456	-.530
320	234	.103	.135	.604	-.478
320	235	.254	.165	.933	-.438
320	236	.392	.182	1.021	-.207
320	237	.386	.191	.969	-.370
320	238	.149	.151	.668	-.433
320	239	.277	.181	.872	-.394
320	240	.400	.184	1.018	-.372
320	241	.439	.174	1.085	-.050
320	242	.402	.158	.953	-.116
320	243	.168	.143	.852	-.273
320	244	-.030	.155	.465	-.660
320	245	.150	.255	.946	-.894
320	246	.171	.209	.713	-.506
320	247	-.131	.157	.422	-.702
320	248	.155	.168	.896	-.571
320	249	.328	.189	1.068	-.494
320	250	.055	.195	.806	-.526
320	251	.182	.171	.774	-.330
320	252	.262	.175	.834	-.172
320	253	.398	.178	1.005	-.049
320	254	.417	.148	1.039	-.061
320	255	.379	.162	1.091	-.078
320	256	.109	.152	.852	-.506
320	257	-.068	.152	.563	-.742

APPENDIX A -- PRESSURE DATA: CONFIGURATION A: HOUSTON NATIONAL BANK

WD	TAP	CPMEAN	CPRMS	CPMAX	CPMIN
320	258	.065	.123	.587	-.445
320	259	.247	.156	.996	-.309
320	260	.019	.200	.635	-.723
320	261	-.024	.144	.433	-.711
320	262	.122	.150	.590	-.455
320	263	.288	.175	.910	-.281
320	264	.325	.173	1.018	-.232
320	265	.321	.168	.919	-.258
320	266	.290	.139	.832	-.101
320	267	.086	.144	.538	-.374
320	268	-.088	.146	.373	-.641
320	269	-.112	.147	.481	-.643
320	270	.036	.125	.570	-.448
320	271	.211	.141	.799	-.253
320	272	.211	.127	.718	-.253
320	273	.192	.123	.653	-.241
320	274	.158	.113	.507	-.251
320	275	.061	.144	.559	-.453
320	276	-.034	.157	.447	-.656
320	277	.198	.127	.623	-.190
320	278	.157	.107	.614	-.199
320	279	.155	.118	.635	-.256
320	280	-.135	.127	.328	-.605
320	281	-.035	.123	.343	-.449
320	282	.216	.132	.682	-.198
320	283	.245	.144	.846	-.217
320	284	.257	.144	.794	-.205
320	285	.248	.144	.763	-.202
320	286	.247	.139	.795	-.194
320	287	.083	.137	.662	-.432
320	288	.017	.133	.562	-.559
320	301	-.370	.133	.048	-1.052
320	302	-.387	.115	.001	-.783
320	303	-.369	.132	.063	-.898
320	304	-.370	.133	.057	-.829
320	305	-.396	.141	.070	-1.055
320	306	-.413	.133	.041	-1.070
320	307	-.385	.154	.173	-1.348
320	308	-.403	.170	.138	-1.486
320	309	-.389	.157	.011	-2.138
320	310	-.431	.143	.038	-1.872
320	311	-.392	.152	.129	-1.068
320	312	-.392	.150	.111	-1.152
320	313	-.401	.151	.115	-1.304
320	314	-.451	.139	-.057	-1.039
320	315	-.425	.165	.041	-1.154
320	316	-.427	.178	.048	-1.329
320	317	-.430	.155	.024	-1.022
320	318	-.440	.131	-.052	-.897
320	319	-.420	.152	.034	-.986

WD	TAP	CPMEAN	CPRMS	CPMAX	CPMIN
320	320	-.425	.162	.036	-1.033
320	321	-.425	.169	.112	-1.151
320	322	-.460	.190	.127	-1.494
320	323	-.394	.180	.115	-1.184
320	324	-.471	.186	.227	-1.450
320	325	-.481	.188	.205	-1.668
320	326	-.550	.169	-.071	-1.397
320	327	-.519	.203	.030	-1.608
320	328	-.498	.211	.095	-1.756
320	329	-.503	.237	.234	-1.792
320	330	-.517	.216	.088	-1.767
320	331	-.497	.177	.109	-1.372
320	332	-.499	.179	.122	-1.422
320	333	-.519	.197	.133	-1.867
320	334	-.566	.200	.208	-1.495
320	335	-.480	.221	.235	-1.454
320	336	-.440	.234	.277	-1.443
320	337	-.448	.243	.193	-1.773
320	338	-.672	.194	-.194	-1.986
320	339	-.639	.229	-.084	-2.316
320	340	-.609	.269	.261	-2.002
320	341	-.514	.261	.309	-1.615
320	342	-.412	.209	.194	-1.252
320	343	-.330	.208	.221	-1.520
320	344	-.330	.211	.265	-1.541
320	345	-.612	.274	.258	-2.706
320	346	-.672	.265	-.013	-2.041
320	347	-.424	.295	.330	-1.503
320	348	-.300	.238	.508	-1.205
320	349	-.244	.180	.318	-1.022
320	350	-.187	.113	.174	-.686
320	351	-.267	.128	.160	-.758
320	352	-.165	.100	.245	-.514
320	353	-.219	.125	.184	-.635
320	354	-.071	.101	.365	-.427
320	355	-.108	.113	.371	-.490
320	356	-.244	.148	.348	-1.071
320	357	-.267	.157	.329	-1.098
320	358	-.208	.151	.245	-1.163
320	359	-.120	.143	.439	-.705
320	360	-.071	.123	.358	-.525
320	361	-.075	.115	.386	-.460
320	362	-.037	.103	.352	-.425
320	401	-.312	.115	.146	-.738
320	402	-.309	.114	.161	-.724
320	403	-.323	.117	.178	-.773
320	404	-.285	.107	.048	-.745
320	405	-.333	.122	.051	-.872
320	406	-.337	.119	.045	-.837
320	407	-.334	.119	.066	-.801

WD	TAP	CPMEAN	CPRMS	CPMAX	CPMIN
320	408	-.297	.110	.110	-.713
320	409	-.416	.155	.051	-1.134
320	410	-.407	.149	.061	-1.060
320	411	-.398	.137	.133	-.889
320	412	-.326	.115	.035	-.804
320	413	-.378	.122	-.010	-.810
320	414	-.368	.129	.129	-.925
320	415	-.378	.146	.082	-1.038
320	416	-.321	.126	.156	-.837
320	417	-.357	.127	-.003	-.898
320	418	-.360	.128	.129	-.845
320	419	-.356	.131	.169	-.859
320	420	-.298	.108	.023	-.749
320	421	-.323	.117	.021	-.773
320	422	-.314	.118	.012	-.772
320	423	-.317	.125	.047	-.904
320	424	-.310	.121	.117	-.666
320	425	-.398	.148	.093	-.947
320	426	-.284	.114	.086	-.755
320	427	-.355	.128	.080	-.836
320	428	-.267	.106	.103	-.615
320	429	-.323	.121	.090	-.732
320	430	-.324	.119	.043	-.769
320	431	-.312	.125	.116	-.748
320	432	-.270	.111	.088	-.710
320	433	-.326	.129	.104	-.904
320	434	-.362	.131	.066	-.923
320	435	-.380	.138	.069	-.926
320	436	-.302	.126	.174	-1.059
320	437	-.378	.140	.003	-1.117
320	438	-.386	.160	.121	-1.023
320	439	-.366	.148	.076	-1.005
320	440	-.260	.110	.094	-.665
320	441	-.333	.124	.207	-.748
320	442	-.356	.129	.107	-.843
320	443	-.344	.138	.113	-.923
320	444	-.295	.133	.137	-.840
320	445	-.355	.127	.137	-.849
320	446	-.330	.129	.155	-.819
320	447	-.337	.134	.166	-.830
320	448	-.310	.154	.199	-.890
320	449	-.341	.169	.193	-1.208
320	450	-.299	.143	.262	-.815
320	451	-.302	.138	.281	-.801
320	452	-.270	.114	.079	-.721
320	453	-.343	.137	.088	-.875
320	454	-.353	.135	.104	-.901
320	455	-.381	.144	.077	-.943
320	456	-.301	.132	.076	-.831
320	457	-.360	.157	.112	-.994

APPENDIX A -- PRESSURE DATA: CONFIGURATION A: HOUSTON NATIONAL BANK

WD	TAP	CPMEAN	CPRMS	CPMAX	CPMIN
320	458	-.404	.159	.042	-1.002
320	459	-.374	.161	.124	-.961
320	460	-.312	.129	.080	-.858
320	461	-.349	.179	.199	-1.058
320	462	-.337	.171	.165	-1.039
320	463	-.293	.155	.293	-.908
320	464	-.268	.115	.246	-.666
320	465	-.352	.130	.170	-.870
320	466	-.391	.135	.108	-.841
320	467	-.390	.150	.196	-.913
320	468	-.338	.132	.054	-.808
320	469	-.343	.156	.081	-.984
320	470	-.360	.153	.057	-.998
320	471	-.322	.202	.501	-1.066
320	472	-.182	.125	.356	-.654
320	473	-.316	.136	.156	-.829
320	474	-.405	.146	-.008	-1.044
320	475	-.425	.152	.032	-1.081
320	476	-.352	.124	.050	-.886
320	477	-.380	.196	.193	-1.142
320	478	-.375	.168	.127	-.984
320	479	-.343	.139	.094	-.816
320	480	-.257	.112	.113	-.660
320	481	-.287	.128	.246	-.769
320	483	-.462	.212	.105	-1.455
320	484	-.398	.173	.088	-1.258
320	485	-.075	.120	.356	-.446
320	486	-.012	.118	.387	-.397
320	501	-.140	.118	.270	-.529
320	502	.055	.156	.615	-.506
320	503	-.302	.135	.158	-.754
320	504	.047	.163	.673	-.546
320	505	-.136	.107	.325	-.522
320	506	.010	.110	.433	-.393
320	507	-.055	.173	.543	-.820
320	508	-.039	.124	.435	-.491
320	509	-.039	.092	.322	-.356
320	510	-.101	.109	.290	-.485
320	511	-.134	.108	.224	-.542
320	512	-.032	.106	.380	-.441
320	601	-.263	.325	.918	-1.892
320	602	-.348	.131	.067	-.945
320	603	-.272	.120	.126	-.712
320	604	-.542	.215	.128	-1.956
320	605	.038	.189	.661	-.894
320	606	-.281	.218	.384	-1.241
320	607	-.267	.127	.116	-.735
320	608	-.060	.225	.639	-1.644
320	609	-.236	.226	.405	-1.445
320	610	-.285	.113	.134	-.688
320	611	-.238	.121	.113	-.674
320	612	-.487	.162	-.020	-1.175
320	613	-.029	.181	.499	-1.239
320	614	.035	.117	.466	-.404
320	615	.002	.130	.490	-.497
320	701	-.022	.144	.467	-.587
320	702	-.062	.117	.319	-.457
320	703	-.002	.125	.448	-.506
320	704	-.154	.136	.254	-.598
320	705	-.010	.126	.524	-.430
320	706	-.073	.102	.274	-.399
320	707	-.017	.118	.462	-.433
320	708	-.199	.121	.203	-.582
320	709	-.082	.113	.295	-.442
320	710	-.097	.098	.337	-.478
320	711	-.038	.103	.314	-.422
320	712	-.137	.120	.267	-.638
320	801	-.073	.130	.504	-.650
320	802	-.099	.126	.364	-.686
320	803	-.366	.154	.233	-1.135
320	804	-.283	.143	.223	-1.090
320	805	-.347	.135	.032	-1.019
320	806	-.085	.137	.372	-.675
320	807	-.418	.193	.275	-1.307
320	808	-.341	.144	.164	-1.062
320	809	-.064	.118	.271	-.533
320	810	-.079	.132	.345	-.605
320	811	-.255	.168	.308	-.904
320	812	-.334	.155	.086	-1.016
320	813	-.405	.151	.159	-1.220
320	814	-.023	.122	.378	-.460
320	815	-.231	.147	.231	-1.008
320	816	-.024	.136	.425	-.451
320	817	-.291	.182	.166	-.941
320	818	-.177	.148	.293	-.862
320	819	-.181	.161	.249	-.892
320	820	-.119	.158	.330	-.980
320	821	.020	.134	.646	-.478
320	822	-.151	.218	.555	-1.082
320	823	-.328	.162	.171	-1.109
320	901	-.197	.179	.327	-1.155
320	902	-.152	.248	.586	-1.306
320	903	-.051	.178	.448	-1.084
320	904	-.318	.177	.218	-1.138
320	905	-.439	.200	.094	-1.606
320	906	-.252	.138	.243	-.820
320	907	-.384	.175	.228	-1.330
320	908	-.243	.140	.316	-.692
320	909	-.408	.139	.195	-.902
320	910	-.394	.173	.318	-1.114
320	911	-.341	.140	.028	-1.142
320	912	-.429	.215	.250	-1.474
320	913	-.514	.178	.079	-1.522
320	914	-.386	.310	.732	-1.653
320	915	-.446	.276	.296	-1.761
330	1	.231	.171	.839	-.302
330	2	.239	.148	.753	-.255
330	3	-.323	.116	.074	-.745
330	4	-.336	.115	.028	-.762
330	5	.293	.169	.954	-.314
330	6	.302	.147	.873	-.091
330	7	-.328	.113	.118	-.757
330	8	-.338	.109	.078	-.731
330	9	-.133	.108	.278	-.481
330	10	-.083	.099	.276	-.415
330	11	-.317	.108	.051	-.735
330	12	-.356	.124	.070	-.751
330	13	-.333	.116	.038	-.725
330	14	-.265	.100	.058	-.586
330	15	.347	.165	.896	-.143
330	16	.409	.168	1.101	-.091
330	17	-.344	.119	.043	-.717
330	18	-.264	.106	.061	-.619
330	19	.332	.162	.920	-.174
330	20	.387	.162	1.043	-.123
330	21	-.345	.136	.078	-.890
330	22	-.275	.103	.106	-.669
330	23	-.002	.140	.476	-.561
330	24	.012	.150	.606	-.610
330	25	-.347	.131	.082	-.822
330	26	-.282	.116	.069	-.728
330	27	.206	.182	.926	-.462
330	28	.269	.180	.925	-.484
330	29	-.367	.149	.064	-.929
330	30	-.300	.115	.049	-.756
330	31	-.050	.157	.551	-.623
330	32	-.003	.135	.688	-.478
330	101	-.491	.165	.278	-1.087
330	102	-.233	.133	.141	-.745
330	103	-.174	.162	.295	-.781
330	104	-.215	.116	.157	-.699
330	105	-.335	.223	.302	-1.040
330	106	-.290	.110	.037	-.657
330	107	-.082	.114	.279	-.590
330	108	-.050	.176	.558	-.607
330	109	-.312	.109	.035	-.757
330	110	-.314	.121	.075	-.837
330	111	-.311	.119	.100	-.755
330	112	-.297	.119	.093	-.749
330	113	.196	.142	.752	-.351

APPENDIX A -- PRESSURE DATA: CONFIGURATION A: HOUSTON NATIONAL BANK

WD	TAP	CPMEAN	CPRMS	CPMAX	CPMIN
330	114	.244	.164	.835	-.324
330	115	.248	.160	.873	-.345
330	116	-.391	.174	.131	-1.089
330	117	-.361	.126	.126	-.851
330	118	-.308	.146	.233	-.837
330	119	-.313	.119	.209	-.776
330	120	-.309	.118	.202	-.716
330	121	-.316	.105	.100	-.687
330	122	-.275	.136	.225	-.785
330	123	-.465	.175	.302	-1.137
330	124	.397	.168	1.006	-.108
330	125	.388	.192	1.009	-.154
330	126	.382	.207	1.108	-.189
330	127	-.355	.127	.034	-.836
330	128	-.348	.125	.044	-.851
330	129	-.289	.109	.071	-.828
330	130	-.248	.176	.282	-1.021
330	131	-.363	.176	.316	-1.064
330	132	.409	.166	.989	-.195
330	133	.413	.171	1.062	-.060
330	134	-.277	.127	.080	-.775
330	135	-.237	.122	.168	-.800
330	136	-.226	.122	.189	-.779
330	137	-.232	.125	.162	-.814
330	138	-.262	.210	.360	-.996
330	139	-.210	.212	.503	-.899
330	140	-.081	.160	.582	-.857
330	141	-.167	.148	.381	-.838
330	142	-.329	.147	.119	-1.033
330	143	-.340	.140	.073	-.872
330	144	-.337	.131	.078	-.848
330	145	-.069	.222	.659	-.846
330	146	-.040	.208	.679	-.887
330	147	-.044	.181	.618	-.704
330	148	-.426	.187	.071	-1.652
330	149	-.392	.139	-.019	-1.079
330	150	-.350	.176	.211	-1.217
330	151	-.315	.145	.091	-.872
330	152	-.312	.142	.094	-.872
330	153	-.329	.115	.049	-.741
330	154	-.315	.158	.148	-1.309
330	155	-.522	.225	.113	-1.853
330	156	.261	.162	1.026	-.299
330	157	.104	.170	.679	-.635
330	158	.129	.172	.666	-.678
330	159	-.316	.140	.080	-.956
330	160	-.312	.140	.078	-.963
330	161	-.315	.137	.068	-.909
330	162	-.330	.199	.234	-1.190
330	163	-.510	.217	.056	-1.365
330	164	.235	.180	.822	-.445
330	165	.213	.165	.827	-.457
330	166	-.302	.173	.142	-1.200
330	167	-.280	.165	.133	-1.179
330	168	-.258	.168	.163	-1.272
330	169	-.196	.153	.224	-.832
330	170	-.205	.206	.369	-.938
330	171	-.292	.233	.403	-1.094
330	172	-.379	.221	.419	-1.174
330	173	-.581	.278	.195	-1.913
330	174	-.286	.157	.156	-.969
330	175	-.224	.153	.178	-.883
330	176	-.173	.178	.261	-.943
330	177	-.298	.180	.173	-1.009
330	178	-.381	.207	.268	-1.294
330	179	-.445	.180	.094	-1.149
330	180	-.426	.170	.091	-1.286
330	181	-.182	.106	.145	-.618
330	182	-.044	.108	.389	-.467
330	183	-.045	.120	.346	-.501
330	184	-.033	.120	.407	-.502
330	185	.007	.096	.350	-.317
330	186	.013	.113	.424	-.371
330	187	-.011	.126	.464	-.629
330	188	-.077	.167	.457	-.985
330	189	-.228	.203	.364	-1.169
330	190	-.270	.217	.365	-1.497
330	191	-.268	.209	.347	-1.509
330	201	-.010	.293	.969	-.817
330	202	-.122	.169	.528	-.796
330	203	-.156	.150	.410	-.857
330	204	-.243	.138	.270	-.741
330	205	-.278	.132	.378	-.707
330	206	.463	.166	1.039	-.051
330	207	.552	.203	1.278	-.140
330	208	.421	.200	1.193	-.117
330	209	.259	.175	.886	-.281
330	210	.102	.138	.676	-.368
330	211	.410	.179	1.029	-.125
330	212	.453	.183	1.070	-.147
330	213	.413	.178	1.131	-.167
330	214	.153	.123	.619	-.324
330	215	.019	.130	.472	-.502
330	216	-.154	.210	.804	-.831
330	217	-.062	.187	.801	-.680
330	218	-.076	.132	.515	-.490
330	219	-.072	.162	.613	-.588
330	220	.372	.178	1.057	-.237
330	221	.386	.178	1.093	-.226
330	222	.365	.153	.863	-.111
330	223	.133	.147	.628	-.292
330	224	-.002	.136	.440	-.454
330	225	.239	.175	.916	-.279
330	226	.343	.154	1.046	-.289
330	227	.397	.179	.945	-.226
330	228	.409	.182	.997	-.209
330	229	.415	.182	.909	-.325
330	230	.430	.158	.960	-.051
330	231	.366	.168	.979	-.167
330	232	.091	.140	.514	-.380
330	233	-.058	.129	.303	-.483
330	234	.229	.147	.747	-.329
330	235	.349	.172	1.044	-.328
330	236	.429	.176	1.161	-.098
330	237	.452	.175	1.150	-.074
330	238	.269	.145	.853	-.202
330	239	.378	.177	.992	-.175
330	240	.455	.183	1.145	-.068
330	241	.457	.177	1.137	-.014
330	242	.371	.138	.998	-.017
330	243	.094	.138	.777	-.371
330	244	-.055	.140	.454	-.667
330	245	.097	.215	.858	-.601
330	246	.139	.174	.615	-.377
330	247	-.005	.162	.717	-.591
330	248	.150	.150	.793	-.330
330	249	.340	.179	1.208	-.205
330	250	.173	.186	1.073	-.411
330	251	.292	.173	.968	-.234
330	252	.335	.174	1.065	-.191
330	253	.387	.178	1.150	-.119
330	254	.397	.136	.939	-.068
330	255	.337	.149	.913	-.168
330	256	.070	.134	.558	-.361
330	257	-.082	.134	.360	-.515
330	258	.104	.118	.561	-.256
330	259	.238	.141	.702	-.175
330	260	.174	.174	.734	-.643
330	261	.060	.152	.680	-.590
330	262	.246	.160	.845	-.184
330	263	.352	.183	1.137	-.150
330	264	.357	.172	.976	-.101
330	265	.327	.162	.884	-.143
330	266	.278	.133	.652	-.221
330	267	.037	.143	.481	-.466
330	268	-.112	.145	.361	-.707
330	269	.002	.161	.609	-.535
330	270	.165	.130	.701	-.351
330	271	.255	.149	.814	-.309
330	272	.234	.134	.727	-.259

APPENDIX A -- PRESSURE DATA: CONFIGURATION A: HOUSTON NATIONAL BANK

WD	TAP	CPMEAN	CPRMS	CPMAX	CPMIN
330	273	.187	.126	.638	-.301
330	274	.181	.100	.505	-.148
330	275	.005	.133	.439	-.419
330	276	-.091	.140	.349	-.544
330	277	.204	.116	.596	-.188
330	278	.234	.111	.578	-.140
330	279	.176	.127	.604	-.230
330	280	-.035	.124	.381	-.454
330	281	.047	.152	.518	-.609
330	282	.267	.120	.743	-.134
330	283	.237	.136	.754	-.208
330	284	.248	.141	.820	-.213
330	285	.216	.133	.679	-.224
330	286	.222	.121	.610	-.209
330	287	.060	.134	.501	-.385
330	288	.001	.133	.403	-.419
330	301	-.340	.131	.053	-.886
330	302	-.323	.112	.099	-.650
330	303	-.343	.129	.159	-.771
330	304	-.350	.131	.164	-.754
330	305	-.351	.129	.152	-.733
330	306	-.308	.109	.012	-.744
330	307	-.347	.130	.047	-.858
330	308	-.365	.135	.031	-.880
330	309	-.316	.127	.139	-.764
330	310	-.308	.114	.040	-.808
330	311	-.333	.133	.107	-.955
330	312	-.345	.128	.100	-.968
330	313	-.359	.132	.053	-.992
330	314	-.361	.114	.096	-.796
330	315	-.401	.142	.280	-1.037
330	316	-.403	.151	.173	-1.518
330	317	-.350	.143	.116	-1.021
330	318	-.333	.132	.118	-.813
330	319	-.369	.159	.220	-1.155
330	320	-.383	.170	.200	-1.124
330	321	-.408	.179	.240	-1.232
330	322	-.421	.170	.078	-1.303
330	323	-.367	.162	.052	-1.782
330	324	-.381	.163	.111	-1.118
330	325	-.390	.163	.105	-1.140
330	326	-.396	.144	-.010	-.995
330	327	-.433	.181	.055	-1.142
330	328	-.441	.191	.155	-1.216
330	329	-.461	.235	.358	-1.693
330	330	-.495	.218	.168	-1.715
330	331	-.424	.183	.184	-1.178
330	332	-.424	.183	.165	-1.416
330	333	-.449	.190	.142	-1.581
330	334	-.444	.158	.004	-1.062

WD	TAP	CPMEAN	CPRMS	CPMAX	CPMIN
330	335	-.452	.196	.225	-1.267
330	336	-.465	.242	.300	-2.130
330	337	-.488	.264	.235	-1.965
330	338	-.455	.161	.109	-1.212
330	339	-.468	.192	.191	-1.449
330	340	-.478	.212	.196	-1.756
330	341	-.474	.219	.194	-1.433
330	342	-.435	.186	.298	-1.298
330	343	-.419	.228	.325	-1.428
330	344	-.419	.242	.337	-1.571
330	345	-.520	.233	.079	-1.717
330	346	-.575	.236	-.016	-2.640
330	347	-.459	.268	.375	-1.769
330	348	-.332	.250	.443	-1.654
330	349	-.240	.207	.433	-1.302
330	350	-.150	.130	.252	-.667
330	351	-.222	.137	.318	-.794
330	352	-.081	.104	.294	-.429
330	353	-.148	.123	.321	-.603
330	354	-.009	.112	.466	-.668
330	355	-.053	.124	.346	-.759
330	356	-.194	.146	.262	-.990
330	357	-.225	.151	.250	-1.023
330	358	-.203	.158	.211	-1.299
330	359	-.131	.168	.466	-.769
330	360	-.042	.133	.441	-.551
330	361	-.025	.117	.367	-.558
330	362	.026	.108	.382	-.469
330	401	-.302	.116	.142	-.660
330	402	-.299	.116	.143	-.666
330	403	-.307	.121	.128	-.742
330	404	-.258	.104	.061	-.608
330	405	-.312	.119	.040	-.707
330	406	-.327	.118	-.001	-.753
330	407	-.333	.119	.025	-.731
330	408	-.273	.093	.056	-.636
330	409	-.339	.110	.124	-.785
330	410	-.333	.109	.152	-.750
330	411	-.377	.118	.037	-.932
330	412	-.288	.109	.026	-.654
330	413	-.342	.123	.025	-.804
330	414	-.344	.125	.062	-.803
330	415	-.333	.134	.150	-.886
330	416	-.289	.099	.082	-.668
330	417	-.349	.122	.046	-.731
330	418	-.333	.107	.003	-.690
330	419	-.327	.112	.031	-.724
330	420	-.277	.106	.111	-.620
330	421	-.315	.118	.065	-.674
330	422	-.313	.118	.067	-.674

WD	TAP	CPMEAN	CPRMS	CPMAX	CPMIN
330	423	-.311	.126	.122	-.731
330	424	-.323	.134	.117	-.853
330	425	-.342	.128	.054	-.844
330	426	-.284	.104	.036	-.675
330	427	-.332	.118	.057	-.755
330	428	-.275	.101	.067	-.645
330	429	-.332	.118	.056	-.742
330	430	-.331	.118	.072	-.730
330	431	-.325	.122	.110	-.780
330	432	-.239	.106	.105	-.603
330	433	-.299	.124	.086	-.760
330	434	-.356	.122	.029	-.784
330	435	-.353	.129	.109	-.842
330	436	-.267	.122	.223	-.785
330	437	-.365	.139	.065	-1.143
330	438	-.351	.154	.126	-1.170
330	439	-.336	.145	.152	-1.096
330	440	-.258	.105	.155	-.718
330	441	-.345	.118	.051	-.821
330	442	-.340	.120	.109	-.768
330	443	-.320	.128	.155	-.940
330	444	-.244	.116	.149	-.731
330	445	-.308	.132	.107	-.780
330	446	-.301	.134	.119	-.737
330	447	-.316	.137	.096	-.776
330	448	-.257	.138	.335	-.782
330	449	-.291	.147	.165	-.894
330	450	-.286	.131	.130	-.707
330	451	-.351	.133	.091	-.840
330	452	-.303	.110	.019	-.657
330	453	-.342	.134	.091	-.836
330	454	-.343	.133	.075	-.843
330	455	-.357	.138	.102	-.895
330	456	-.293	.117	.040	-.766
330	457	-.350	.142	.069	-.914
330	458	-.370	.134	.033	-1.025
330	459	-.351	.137	.053	-.946
330	460	-.288	.122	.092	-.758
330	461	-.318	.184	.385	-.982
330	462	-.287	.175	.234	-.877
330	463	-.248	.141	.221	-.837
330	464	-.226	.120	.198	-.710
330	465	-.356	.148	.051	-1.113
330	466	-.370	.151	.037	-.902
330	467	-.331	.154	.126	-.940
330	468	-.290	.126	.156	-.836
330	469	-.295	.157	.214	-1.202
330	470	-.296	.152	.197	-1.026
330	471	-.228	.173	.470	-1.074
330	472	-.117	.115	.246	-.544

APPENDIX A -- PRESSURE DATA: CONFIGURATION A: HOUSTON NATIONAL BANK

WD	TAP	CPMEAN	CPRMS	CPMAX	CPMIN
330	473	-.298	.159	.283	-.819
330	474	-.447	.162	.077	-1.127
330	475	-.443	.178	.076	-1.276
330	476	-.380	.169	.040	-1.538
330	477	-.319	.172	.230	-.986
330	478	-.317	.178	.129	-1.069
330	479	-.253	.145	.132	-.764
330	480	-.158	.103	.189	-.502
330	481	-.224	.128	.205	-.696
330	483	-.449	.226	.267	-1.510
330	484	-.389	.181	.090	-1.294
330	485	-.000	.117	.366	-.437
330	486	.028	.117	.461	-.344
330	501	-.076	.103	.253	-.449
330	502	.081	.132	.559	-.513
330	503	-.142	.111	.275	-.547
330	504	.097	.144	.632	-.730
330	505	-.069	.111	.286	-.477
330	506	.014	.118	.390	-.402
330	507	.069	.161	.640	-.705
330	508	-.013	.128	.418	-.446
330	509	.024	.104	.408	-.366
330	510	-.016	.123	.498	-.432
330	511	.017	.115	.460	-.423
330	512	.021	.118	.427	-.423
330	601	-.062	.255	.767	-1.921
330	602	-.337	.143	.101	-.909
330	603	-.221	.139	.214	-.718
330	604	-.235	.152	.248	-.803
330	605	-.110	.243	.605	-1.198
330	606	-.183	.199	.391	-1.259
330	607	-.226	.137	.183	-.760
330	608	-.072	.223	.608	-1.191
330	609	-.210	.224	.410	-1.322
330	610	-.261	.144	.140	-.793
330	611	-.215	.142	.203	-.715
330	612	-.273	.163	.146	-.859
330	613	-.055	.202	.510	-1.333
330	614	.079	.104	.408	-.276
330	615	.039	.134	.520	-.524
330	701	.022	.138	.574	-.532
330	702	-.003	.113	.302	-.416
330	703	.008	.134	.446	-.561
330	704	.005	.120	.354	-.499
330	705	.019	.139	.445	-.575
330	706	.001	.107	.411	-.342
330	707	.021	.121	.460	-.368
330	708	-.044	.123	.464	-.478
330	709	-.018	.125	.472	-.438
330	710	-.023	.118	.547	-.375

WD	TAP	CPMEAN	CPRMS	CPMAX	CPMIN
330	711	.000	.125	.576	-.384
330	712	.016	.128	.555	-.367
330	801	-.028	.134	.444	-.623
330	802	-.086	.129	.411	-.715
330	803	-.259	.160	.211	-.912
330	804	-.247	.152	.258	-.873
330	805	-.247	.131	.198	-.840
330	806	-.010	.132	.442	-.576
330	807	-.276	.168	.339	-1.050
330	808	-.290	.153	.191	-.863
330	809	.004	.114	.385	-.436
330	810	-.059	.135	.466	-.567
330	811	-.115	.155	.437	-.676
330	812	-.299	.143	.282	-.876
330	813	-.316	.151	.103	-.931
330	814	.010	.114	.413	-.366
330	815	-.050	.116	.331	-.594
330	816	.041	.124	.489	-.400
330	817	-.142	.113	.295	-.540
330	818	-.099	.119	.313	-.573
330	819	.014	.115	.623	-.352
330	820	-.007	.117	.481	-.383
330	821	.113	.134	.781	-.287
330	822	.036	.161	.589	-.505
330	823	-.055	.131	.361	-.641
330	901	-.005	.128	.402	-.643
330	902	-.218	.233	.451	-1.116
330	903	-.133	.187	.474	-1.030
330	904	-.295	.167	.231	-1.219
330	905	-.287	.178	.246	-1.416
330	906	-.191	.128	.260	-.728
330	907	-.313	.162	.120	-1.072
330	908	-.234	.155	.320	-.959
330	909	-.235	.130	.183	-.643
330	910	-.328	.168	.358	-1.101
330	911	-.287	.176	.157	-1.133
330	912	-.413	.210	.226	-1.418
330	913	-.306	.141	.151	-.918
330	914	-.156	.247	.637	-1.417
330	915	-.344	.300	.504	-1.916
340	1	.282	.184	.957	-.319
340	2	.296	.173	.849	-.190
340	3	-.305	.123	.136	-.758
340	4	-.321	.126	.096	-.809
340	5	.240	.161	.851	-.277
340	6	.210	.134	.719	-.294
340	7	-.292	.116	.114	-.721
340	8	-.307	.113	.105	-.699
340	9	-.142	.101	.209	-.510
340	10	-.123	.096	.224	-.469

WD	TAP	CPMEAN	CPRMS	CPMAX	CPMIN
340	11	-.316	.119	.088	-.760
340	12	-.315	.119	.080	-.763
340	13	-.339	.126	.107	-.751
340	14	-.256	.113	.089	-.636
340	15	.394	.184	.965	-.206
340	16	.439	.190	1.053	-.141
340	17	-.326	.134	.081	-.809
340	18	-.278	.113	.115	-.677
340	19	.392	.164	1.077	-.165
340	20	.432	.161	1.022	-.037
340	21	-.345	.141	.115	-1.015
340	22	-.286	.113	.090	-.786
340	23	.120	.174	.794	-.501
340	24	.172	.174	.804	-.402
340	25	-.363	.150	.172	-.861
340	26	-.323	.129	.093	-.802
340	27	.301	.181	1.112	-.209
340	28	.342	.178	1.028	-.178
340	29	-.376	.157	.127	-1.014
340	30	-.331	.136	.061	-.826
340	31	.005	.153	.486	-.546
340	32	.130	.164	.683	-.414
340	101	-.213	.238	.446	-1.080
340	102	-.099	.122	.330	-.537
340	103	.029	.141	.521	-.544
340	104	-.138	.113	.277	-.526
340	105	.079	.216	.653	-.892
340	106	-.263	.119	.190	-.720
340	107	.018	.125	.490	-.378
340	108	.228	.208	.874	-.561
340	109	-.289	.112	.081	-.694
340	110	-.289	.126	.111	-.761
340	111	-.287	.126	.078	-.734
340	112	-.276	.124	.178	-.666
340	113	.273	.140	.781	-.109
340	114	.366	.171	1.013	-.153
340	115	.371	.181	1.066	-.149
340	116	-.481	.248	.376	-1.318
340	117	-.280	.154	.230	-.804
340	118	-.186	.198	.542	-.889
340	119	-.329	.127	.120	-.762
340	120	-.325	.125	.107	-.753
340	121	-.318	.109	.018	-.801
340	122	-.203	.142	.210	-.854
340	123	-.429	.259	.510	-1.321
340	124	.450	.186	1.041	-.028
340	125	.470	.182	1.079	-.148
340	126	.475	.201	1.149	-.158
340	127	-.344	.118	.082	-.810
340	128	-.336	.115	.065	-.814

APPENDIX A -- PRESSURE DATA: CONFIGURATION A; HOUSTON NATIONAL BANK

WD	TAP	CPMEAN	CPRMS	CPMAX	CPMIN
340	129	-.215	.100	.132	-.626
340	130	-.051	.146	.394	-.833
340	131	-.162	.192	.560	-.869
340	132	.408	.173	.926	-.065
340	133	.447	.169	1.031	-.023
340	134	-.242	.123	.126	-.672
340	135	-.269	.128	.155	-.695
340	136	-.230	.127	.151	-.660
340	137	-.149	.117	.270	-.568
340	138	-.015	.145	.476	-.735
340	139	.096	.175	.620	-.651
340	140	.153	.193	.791	-.483
340	141	.067	.177	.601	-.571
340	142	-.327	.162	.238	-.874
340	143	-.329	.162	.295	-.947
340	144	-.349	.157	.107	-1.027
340	145	.186	.176	.727	-.480
340	146	.174	.209	.918	-.572
340	147	.144	.196	.979	-.459
340	148	-.520	.253	.188	-1.437
340	149	-.354	.154	.112	-.912
340	150	-.264	.202	.342	-1.037
340	151	-.353	.153	.105	-1.079
340	152	-.347	.147	.094	-.973
340	153	-.339	.131	.147	-.732
340	154	-.222	.160	.396	-.833
340	155	-.410	.248	.396	-1.161
340	156	.349	.171	.910	-.212
340	157	.252	.150	.924	-.146
340	158	.260	.161	1.013	-.177
340	159	-.356	.154	.114	-1.019
340	160	-.350	.152	.110	-1.025
340	161	-.260	.116	.112	-.892
340	162	-.134	.185	.402	-1.106
340	163	-.376	.245	.568	-1.513
340	164	.391	.166	1.012	-.149
340	165	.343	.154	1.005	-.140
340	166	-.221	.126	.276	-.821
340	167	-.223	.127	.282	-.803
340	168	-.160	.121	.315	-.619
340	169	-.069	.116	.406	-.651
340	170	-.008	.149	.551	-.917
340	171	-.045	.208	.618	-.957
340	172	-.170	.265	.692	-1.092
340	173	-.192	.304	.561	-1.379
340	174	-.275	.137	.186	-.896
340	175	-.157	.124	.235	-.630
340	176	-.007	.120	.376	-.506
340	177	-.021	.123	.351	-.549
340	178	-.082	.185	.412	-.972
340	179	-.185	.200	.427	-1.025
340	180	-.188	.187	.439	-.975
340	181	-.137	.102	.178	-.572
340	182	-.045	.097	.279	-.359
340	183	-.016	.111	.381	-.410
340	184	-.007	.112	.401	-.430
340	185	.058	.098	.475	-.325
340	186	.045	.116	.580	-.407
340	187	.027	.129	.427	-.502
340	188	.004	.159	.431	-.688
340	189	.009	.144	.426	-.869
340	190	-.036	.163	.454	-.769
340	191	-.038	.156	.424	-.721
340	201	.262	.246	.987	-.591
340	202	.107	.231	.837	-.613
340	203	-.150	.140	.385	-.632
340	204	-.248	.122	.220	-.671
340	205	-.283	.115	.139	-.661
340	206	.450	.155	.990	-.132
340	207	.459	.189	1.146	-.169
340	208	.272	.173	.961	-.242
340	209	.110	.150	.662	-.388
340	210	.045	.113	.581	-.350
340	211	.450	.178	1.059	-.087
340	212	.447	.173	1.058	-.067
340	213	.352	.155	.971	-.148
340	214	.096	.108	.467	-.255
340	215	-.032	.119	.371	-.425
340	216	.020	.226	.709	-.756
340	217	.047	.175	.703	-.548
340	218	.032	.136	.609	-.341
340	219	.045	.183	.834	-.439
340	220	.385	.205	.996	-.492
340	221	.380	.193	.967	-.342
340	222	.309	.142	.840	-.141
340	223	.075	.135	.519	-.366
340	224	-.038	.124	.381	-.434
340	225	.311	.182	1.043	-.282
340	226	.403	.159	1.135	-.110
340	227	.407	.173	1.107	-.044
340	228	.442	.176	1.146	-.054
340	229	.374	.181	1.118	-.206
340	230	.325	.164	.867	-.269
340	231	.265	.153	.823	-.181
340	232	.015	.121	.446	-.378
340	233	-.109	.116	.312	-.476
340	234	.333	.152	.875	-.107
340	235	.405	.175	1.029	-.124
340	236	.432	.173	1.058	-.072
340	237	.455	.173	1.142	-.054
340	238	.353	.153	.906	-.063
340	239	.401	.178	1.021	-.100
340	240	.399	.172	1.002	-.114
340	241	.350	.166	.968	-.127
340	242	.234	.117	.593	-.094
340	243	.057	.137	.581	-.352
340	244	-.105	.122	.342	-.552
340	245	.088	.208	.925	-.613
340	246	.124	.162	.812	-.404
340	247	.085	.167	.779	-.466
340	248	.187	.160	.998	-.310
340	249	.294	.169	1.216	-.231
340	250	.321	.188	1.051	-.329
340	251	.363	.172	.900	-.167
340	252	.382	.170	.937	-.123
340	253	.379	.158	.933	-.063
340	254	.250	.122	.662	-.113
340	255	.198	.135	.694	-.215
340	256	.012	.123	.424	-.389
340	257	-.087	.124	.340	-.510
340	258	.212	.141	.846	-.247
340	259	.302	.165	1.030	-.247
340	260	.327	.179	1.022	-.283
340	261	.207	.171	.772	-.414
340	262	.267	.152	.769	-.216
340	263	.316	.151	.834	-.133
340	264	.311	.138	.802	-.106
340	265	.269	.134	.769	-.125
340	266	.197	.117	.684	-.204
340	267	.013	.135	.552	-.491
340	268	-.092	.142	.373	-.668
340	269	.130	.150	.690	-.366
340	270	.187	.129	.678	-.239
340	271	.249	.142	.731	-.215
340	272	.224	.130	.651	-.199
340	273	.168	.127	.600	-.245
340	274	.111	.100	.456	-.236
340	275	-.022	.122	.399	-.530
340	276	-.085	.128	.327	-.647
340	277	.205	.121	.656	-.178
340	278	.170	.123	.602	-.201
340	279	.136	.131	.600	-.307
340	280	.071	.123	.501	-.363
340	281	.111	.133	.535	-.336
340	282	.247	.111	.614	-.075
340	283	.230	.117	.629	-.116
340	284	.236	.122	.677	-.122
340	285	.194	.112	.577	-.143
340	286	.119	.100	.491	-.218
340	287	.017	.116	.393	-.363

APPENDIX A -- PRESSURE DATA: CONFIGURATION A: HOUSTON NATIONAL BANK

WD	TAP	CPMEAN	CPRMS	CPMAX	CPMIN
340	288	-.025	.118	.354	-.384
340	301	-.277	.120	.073	-.803
340	302	-.333	.110	-.004	-.667
340	303	-.304	.123	.066	-.674
340	304	-.307	.124	.071	-.692
340	305	-.309	.125	.073	-.817
340	306	-.334	.112	.084	-.923
340	307	-.321	.123	.132	-.850
340	308	-.328	.123	.070	-.782
340	309	-.297	.133	.096	-.797
340	310	-.272	.113	.048	-.660
340	311	-.264	.126	.097	-.692
340	312	-.285	.119	.066	-.752
340	313	-.313	.122	.044	-.870
340	314	-.366	.116	.025	-.842
340	315	-.363	.132	.116	-.913
340	316	-.357	.135	.137	-.982
340	317	-.314	.139	.153	-.831
340	318	-.339	.131	.072	-.842
340	319	-.338	.151	.078	-.932
340	320	-.347	.158	.071	-1.036
340	321	-.381	.164	.104	-1.278
340	322	-.431	.173	.019	-1.207
340	323	-.368	.152	.074	-1.195
340	324	-.266	.150	.194	-.814
340	325	-.280	.151	.165	-.870
340	326	-.361	.139	.033	-.936
340	327	-.369	.174	.173	-1.269
340	328	-.384	.178	.154	-1.273
340	329	-.410	.183	.135	-1.305
340	330	-.481	.213	.165	-1.518
340	331	-.280	.171	.231	-.848
340	332	-.276	.169	.243	-.867
340	333	-.318	.174	.310	-.968
340	334	-.386	.160	.086	-1.289
340	335	-.385	.197	.252	-1.236
340	336	-.403	.234	.269	-2.085
340	337	-.439	.265	.235	-2.464
340	338	-.363	.185	.095	-1.421
340	339	-.345	.210	.181	-1.474
340	340	-.362	.227	.174	-2.684
340	341	-.384	.214	.191	-1.692
340	342	-.403	.178	.147	-1.506
340	343	-.377	.226	.240	-1.776
340	344	-.388	.264	.263	-1.932
340	345	-.352	.197	.179	-1.432
340	346	-.394	.168	.042	-1.691
340	347	-.365	.207	.678	-1.577
340	348	-.328	.228	.417	-1.663
340	349	-.288	.231	.412	-1.622

WD	TAP	CPMEAN	CPRMS	CPMAX	CPMIN
340	350	-.181	.150	.351	-.827
340	351	-.236	.189	.363	-1.180
340	352	-.071	.129	.490	-.596
340	353	-.178	.184	.489	-1.343
340	354	-.050	.143	.397	-.714
340	355	-.084	.157	.416	-.836
340	356	-.218	.159	.225	-.923
340	357	-.237	.164	.224	-.958
340	358	-.250	.173	.171	-1.202
340	359	-.235	.202	.481	-1.074
340	360	-.133	.202	.588	-1.004
340	361	-.076	.189	.514	-1.064
340	362	.005	.166	.511	-1.273
340	401	-.301	.122	.076	-.748
340	402	-.292	.122	.103	-.736
340	403	-.295	.122	.128	-.781
340	404	-.252	.101	.116	-.571
340	405	-.302	.115	.127	-.662
340	406	-.329	.114	.108	-.729
340	407	-.338	.116	.077	-.753
340	408	-.255	.099	.106	-.597
340	409	-.312	.120	.119	-.828
340	410	-.302	.120	.131	-.785
340	411	-.372	.126	.059	-.891
340	412	-.305	.111	.069	-.691
340	413	-.351	.128	.038	-1.094
340	414	-.338	.132	.101	-.864
340	415	-.356	.154	.159	-1.003
340	416	-.308	.103	.003	-.725
340	417	-.347	.129	.065	-.933
340	418	-.341	.111	-.007	-.750
340	419	-.336	.119	.026	-.820
340	420	-.283	.117	.162	-.723
340	421	-.323	.130	.163	-.754
340	422	-.315	.130	.163	-.723
340	423	-.330	.136	.176	-.811
340	424	-.320	.138	.115	-.744
340	425	-.388	.140	.076	-1.004
340	426	-.356	.115	.035	-.779
340	427	-.371	.132	.026	-.843
340	428	-.288	.113	.066	-.750
340	429	-.341	.132	.124	-.879
340	430	-.324	.127	.122	-.783
340	431	-.327	.134	.155	-.817
340	432	-.257	.112	.157	-.727
340	433	-.306	.129	.161	-.873
340	434	-.355	.126	.078	-.753
340	435	-.361	.131	.107	-.907
340	436	-.277	.113	.191	-.660
340	437	-.344	.132	.073	-1.009

WD	TAP	CPMEAN	CPRMS	CPMAX	CPMIN
340	438	-.361	.151	.158	-1.168
340	439	-.364	.141	.156	-1.120
340	440	-.328	.120	.097	-.785
340	441	-.378	.135	.047	-.921
340	442	-.353	.136	.071	-.832
340	443	-.349	.144	.128	-.849
340	444	-.261	.125	.183	-.722
340	445	-.315	.146	.179	-.857
340	446	-.330	.154	.156	-.891
340	447	-.345	.155	.153	-.893
340	448	-.285	.149	.300	-.839
340	449	-.319	.160	.231	-.969
340	450	-.363	.155	.193	-.993
340	451	-.439	.161	.076	-1.072
340	452	-.355	.134	.059	-.931
340	453	-.349	.148	.103	-.884
340	454	-.338	.146	.132	-.809
340	455	-.367	.149	.077	-.848
340	456	-.318	.131	.122	-.828
340	457	-.367	.154	.137	-.954
340	458	-.395	.152	.150	-.988
340	459	-.387	.160	.167	-1.521
340	460	-.324	.139	.163	-.927
340	461	-.233	.162	.313	-.966
340	462	-.198	.151	.328	-.805
340	463	-.227	.154	.299	-.760
340	464	-.272	.125	.193	-.674
340	465	-.440	.153	.048	-1.024
340	466	-.426	.154	.093	-1.019
340	467	-.370	.145	.183	-.917
340	468	-.288	.132	.106	-.785
340	469	-.215	.161	.474	-.913
340	470	-.188	.151	.440	-.892
340	471	-.171	.155	.366	-.742
340	472	-.130	.124	.268	-.622
340	473	-.311	.190	.375	-1.364
340	474	-.559	.211	.054	-1.499
340	475	-.563	.244	.061	-2.252
340	476	-.443	.175	.072	-1.211
340	477	-.231	.166	.273	-.914
340	478	-.215	.166	.268	-1.347
340	479	-.170	.139	.271	-.696
340	480	-.142	.120	.242	-.578
340	481	-.211	.151	.251	-.747
340	483	-.600	.284	.107	-1.908
340	484	-.532	.227	.120	-1.750
340	485	-.003	.151	.511	-1.046
340	486	.057	.109	.510	-.313
340	501	-.068	.108	.293	-.462
340	502	.124	.134	.558	-.450

APPENDIX A -- PRESSURE DATA: CONFIGURATION A: HOUSTON NATIONAL BANK

WD	TAP	CPMEAN	CPRMS	CPMAX	CPMIN
340	503	-.122	.116	.288	-.507
340	504	.148	.147	.868	-.916
340	505	-.042	.103	.295	-.356
340	506	.052	.109	.436	-.326
340	507	.133	.152	.890	-.510
340	508	.029	.119	.423	-.424
340	509	.041	.101	.397	-.324
340	510	.014	.122	.454	-.373
340	511	.045	.109	.463	-.310
340	512	.053	.112	.480	-.373
340	601	.024	.225	.755	-1.309
340	602	-.402	.162	.086	-1.059
340	603	-.177	.147	.226	-.771
340	604	-.176	.144	.260	-.735
340	605	-.116	.195	.671	-1.199
340	606	-.126	.197	.560	-1.274
340	607	-.194	.142	.221	-.899
340	608	-.171	.203	.562	-1.353
340	609	-.170	.234	.409	-1.521
340	610	-.321	.181	.115	-1.014
340	611	-.174	.136	.213	-.716
340	612	-.173	.137	.219	-.690
340	613	-.143	.189	.590	-1.353
340	614	.092	.110	.463	-.344
340	615	.035	.159	.589	-.675
340	701	-.022	.145	.486	-.651
340	702	-.033	.122	.404	-.550
340	703	-.031	.148	.478	-1.148
340	704	.002	.127	.443	-.472
340	705	-.030	.153	.590	-.642
340	706	.003	.116	.396	-.385
340	707	.043	.127	.489	-.489
340	708	-.064	.147	.376	-1.182
340	709	-.010	.150	.622	-.879
340	710	-.004	.124	.544	-.686
340	711	.040	.114	.559	-.427
340	712	.059	.118	.509	-.385
340	801	-.037	.123	.369	-.460
340	802	-.070	.126	.403	-.722
340	803	-.217	.158	.284	-.996
340	804	-.227	.148	.319	-.873
340	805	-.255	.126	.091	-.755
340	806	.005	.136	.667	-.636
340	807	-.201	.176	.405	-.842
340	808	-.272	.148	.156	-.898
340	809	-.010	.119	.401	-.500
340	810	-.055	.139	.368	-.594
340	811	-.098	.156	.416	-.829
340	812	-.257	.150	.211	-.832
340	813	-.296	.142	.100	-.887
340	814	.028	.112	.393	-.344
340	815	-.031	.109	.376	-.463
340	816	.055	.123	.578	-.329
340	817	-.146	.128	.267	-.645
340	818	-.074	.120	.306	-.558
340	819	.040	.120	.518	-.534
340	820	.011	.122	.503	-.402
340	821	.125	.137	.757	-.324
340	822	.055	.164	.664	-.464
340	823	-.021	.137	.434	-.667
340	901	.007	.123	.422	-.601
340	902	-.179	.182	.469	-1.222
340	903	-.205	.187	.370	-.873
340	904	-.200	.162	.251	-.976
340	905	-.215	.176	.277	-1.063
340	906	-.156	.142	.278	-.803
340	907	-.262	.177	.206	-1.192
340	908	-.207	.171	.372	-.874
340	909	-.179	.147	.216	-.719
340	910	-.270	.195	.318	-1.307
340	911	-.244	.157	.213	-1.173
340	912	-.516	.260	.232	-1.807
340	913	-.298	.157	.173	-1.149
340	914	-.103	.244	.575	-1.706
340	915	-.228	.296	.749	-1.286
350	1	.159	.174	.754	-.378
350	2	.179	.186	.936	-.498
350	3	-.257	.122	.158	-.659
350	4	-.256	.118	.153	-.679
350	5	.159	.142	.697	-.336
350	6	.149	.127	.650	-.299
350	7	-.279	.123	.098	-.766
350	8	-.277	.117	.076	-.789
350	9	-.145	.099	.140	-.470
350	10	-.158	.095	.183	-.462
350	11	-.294	.121	.074	-.740
350	12	-.300	.121	.070	-.707
350	13	-.333	.129	.121	-.790
350	14	-.317	.114	.054	-.719
350	15	.407	.185	1.029	-.170
350	16	.427	.176	1.090	-.141
350	17	-.348	.129	.059	-.813
350	18	-.348	.127	.038	-.898
350	19	.397	.168	.973	-.107
350	20	.421	.165	1.169	-.117
350	21	-.341	.137	.058	-.897
350	22	-.347	.125	.032	-.892
350	23	.258	.160	.857	-.258
350	24	.308	.149	.819	-.177
350	25	-.307	.155	.217	-.996
350	26	-.286	.161	.411	-.813
350	27	.333	.167	.999	-.230
350	28	.352	.163	1.279	-.177
350	29	-.344	.143	.153	-.834
350	30	-.390	.146	.086	-.975
350	31	.133	.177	.829	-.365
350	32	.270	.163	.952	-.256
350	101	.200	.213	.789	-.614
350	102	.029	.136	.465	-.446
350	103	.193	.155	.713	-.353
350	104	-.041	.128	.368	-.492
350	105	.299	.171	.928	-.380
350	106	-.213	.119	.215	-.603
350	107	.105	.137	.642	-.382
350	108	.380	.191	.962	-.318
350	109	-.307	.127	.120	-.809
350	110	-.288	.158	.336	-.885
350	111	-.292	.155	.209	-.870
350	112	-.323	.148	.174	-.871
350	113	.320	.149	.818	-.131
350	114	.426	.178	1.068	-.106
350	115	.439	.183	1.101	-.145
350	116	-.152	.313	.709	-1.324
350	117	-.123	.136	.410	-.664
350	118	.048	.177	.611	-.650
350	119	-.330	.135	.150	-.778
350	120	-.329	.133	.149	-.757
350	121	-.326	.118	.032	-.838
350	122	-.092	.123	.370	-.550
350	123	-.039	.281	.850	-1.107
350	124	.476	.182	1.211	-.126
350	125	.416	.154	1.052	.014
350	126	.413	.163	1.100	-.023
350	127	-.336	.132	.090	-.802
350	128	-.335	.131	.082	-.808
350	129	-.209	.110	.167	-.568
350	130	.117	.144	.647	-.419
350	131	.142	.245	1.053	-.786
350	132	.480	.179	1.214	-.163
350	133	.355	.151	.932	-.102
350	134	-.192	.126	.273	-.616
350	135	-.211	.137	.254	-.677
350	136	-.157	.139	.329	-.601
350	137	-.058	.125	.465	-.489
350	138	.096	.140	.665	-.412
350	139	.227	.155	.848	-.250
350	140	.299	.186	.957	-.261
350	141	.255	.188	.921	-.415
350	142	-.287	.176	.332	-.885
350	143	-.251	.189	.414	-.900

APPENDIX A -- PRESSURE DATA: CONFIGURATION A; HOUSTON NATIONAL BANK

WD	TAP	CPMEAN	CPRMS	CPMAX	CPMIN
350	144	-.370	.159	.134	-.991
350	145	.316	.155	.799	-.199
350	146	.360	.194	.885	-.464
350	147	.349	.204	.932	-.408
350	148	-.444	.284	.490	-1.304
350	149	-.275	.160	.167	-.871
350	150	-.096	.202	.523	-.841
350	151	-.411	.169	.115	-1.157
350	152	-.416	.159	.092	-1.020
350	153	-.291	.142	.128	-.742
350	154	-.110	.141	.403	-.878
350	155	-.153	.257	.678	-1.066
350	156	.375	.157	.958	-.077
350	157	.395	.159	.924	-.007
350	158	.407	.174	.982	-.026
350	159	-.382	.139	.093	-.883
350	160	-.379	.138	.096	-.896
350	161	-.216	.106	.170	-.601
350	162	.075	.142	.505	-.840
350	163	-.007	.235	.693	-.892
350	164	.401	.159	.989	-.082
350	165	.323	.153	.928	-.072
350	166	-.176	.126	.244	-.622
350	167	-.179	.126	.231	-.610
350	168	-.105	.122	.308	-.538
350	169	.018	.108	.365	-.333
350	170	.109	.124	.509	-.444
350	171	.153	.141	.596	-.520
350	172	.124	.198	.664	-.717
350	173	.129	.226	.782	-.739
350	174	-.210	.136	.192	-.769
350	175	-.079	.125	.292	-.561
350	176	.065	.121	.430	-.314
350	177	.061	.101	.427	-.275
350	178	.074	.142	.563	-.549
350	179	.015	.202	.635	-.660
350	180	.001	.199	.623	-.649
350	181	-.159	.101	.239	-.556
350	182	-.034	.101	.291	-.427
350	183	.027	.110	.394	-.461
350	184	.034	.109	.426	-.417
350	185	.058	.099	.499	-.265
350	186	.070	.117	.593	-.312
350	187	.077	.122	.604	-.355
350	188	.073	.131	.650	-.311
350	189	.054	.122	.504	-.352
350	190	.041	.140	.604	-.416
350	191	.046	.133	.573	-.361
350	201	.312	.225	1.054	-.709
350	202	.264	.175	.790	-.430
350	203	-.141	.130	.342	-.669
350	204	-.208	.122	.247	-.590
350	205	-.228	.121	.205	-.624
350	206	.400	.190	1.037	-.285
350	207	.395	.211	1.205	-.250
350	208	.214	.168	.858	-.456
350	209	.026	.136	.502	-.484
350	210	-.076	.104	.242	-.565
350	211	.373	.207	1.096	-.527
350	212	.358	.186	1.030	-.327
350	213	.251	.153	.819	-.283
350	214	-.001	.100	.352	-.332
350	215	-.076	.107	.272	-.420
350	216	.219	.245	1.111	-.660
350	217	.159	.206	.986	-.513
350	218	.032	.132	.479	-.448
350	219	.117	.206	.855	-.487
350	220	.298	.222	.926	-.788
350	221	.315	.187	.876	-.454
350	222	.156	.123	.605	-.193
350	223	-.002	.119	.381	-.365
350	224	-.071	.116	.300	-.455
350	225	.394	.191	1.055	-.231
350	226	.467	.184	1.054	-.075
350	227	.455	.195	1.121	-.137
350	228	.510	.202	1.150	-.081
350	229	.189	.202	.944	-.431
350	230	.172	.187	.717	-.499
350	231	.204	.146	.738	-.294
350	232	-.022	.116	.388	-.464
350	233	-.134	.112	.274	-.546
350	234	.353	.161	.841	-.146
350	235	.408	.182	.963	-.119
350	236	.403	.174	.970	-.089
350	237	.421	.180	.967	-.068
350	238	.377	.165	.929	-.249
350	239	.421	.180	1.055	-.185
350	240	.376	.159	.868	-.115
350	241	.275	.150	.750	-.248
350	242	.135	.115	.506	-.226
350	243	-.022	.120	.377	-.493
350	244	-.133	.118	.261	-.657
350	245	.167	.196	.881	-.508
350	246	.172	.149	.603	-.245
350	247	.188	.177	1.090	-.355
350	248	.296	.168	1.040	-.220
350	249	.364	.168	1.084	-.206
350	250	.363	.176	.974	-.149
350	251	.369	.203	1.108	-.557
350	252	.384	.193	1.072	-.520
350	253	.343	.165	.942	-.272
350	254	.205	.121	.651	-.170
350	255	.172	.132	.608	-.273
350	256	-.028	.127	.391	-.427
350	257	-.130	.133	.289	-.583
350	258	.274	.150	.818	-.173
350	259	.361	.175	.987	-.162
350	260	.390	.177	.979	-.195
350	261	.313	.177	.934	-.387
350	262	.294	.130	.894	-.229
350	263	.224	.139	.750	-.277
350	264	.219	.127	.672	-.191
350	265	.177	.121	.638	-.245
350	266	.160	.105	.519	-.184
350	267	-.005	.122	.361	-.410
350	268	-.075	.123	.347	-.462
350	269	.167	.139	.731	-.233
350	270	.259	.132	.762	-.226
350	271	.230	.137	.778	-.220
350	272	.185	.120	.601	-.165
350	273	.130	.116	.492	-.220
350	274	.097	.102	.445	-.246
350	275	-.035	.120	.428	-.432
350	276	-.077	.121	.385	-.482
350	277	.184	.124	.625	-.232
350	278	.163	.103	.559	-.192
350	279	.097	.118	.545	-.284
350	280	.117	.122	.527	-.303
350	281	.142	.125	.642	-.278
350	282	.252	.110	.752	-.094
350	283	.197	.120	.727	-.177
350	284	.177	.121	.670	-.200
350	285	.149	.115	.585	-.224
350	286	.104	.105	.457	-.246
350	287	-.012	.119	.332	-.435
350	288	-.050	.120	.310	-.485
350	301	-.271	.120	.107	-.675
350	302	-.278	.113	.151	-.674
350	303	-.283	.129	.196	-.732
350	304	-.290	.130	.195	-.729
350	305	-.285	.129	.221	-.724
350	306	-.268	.109	.097	-.785
350	307	-.294	.123	.142	-.786
350	308	-.313	.125	.104	-.824
350	309	-.251	.126	.135	-.722
350	310	-.189	.113	.176	-.600
350	311	-.222	.131	.205	-.706
350	312	-.262	.129	.171	-.882
350	313	-.282	.129	.177	-.786
350	314	-.289	.108	.038	-.673

APPENDIX A -- PRESSURE DATA: CONFIGURATION A; HOUSTON NATIONAL BANK

WD	TAP	CPMEAN	CPRMS	CPMAX	CPMIN
350	315	-.328	.128	.070	-.725
350	316	-.330	.132	.091	-.966
350	317	-.274	.132	.175	-.822
350	318	-.296	.115	.055	-.835
350	319	-.329	.138	.090	-1.078
350	320	-.343	.145	.048	-.956
350	321	-.361	.150	.053	-1.066
350	322	-.357	.133	.094	-.964
350	323	-.344	.131	.120	-.924
350	324	-.253	.146	.219	-.811
350	325	-.259	.146	.196	-.853
350	326	-.294	.122	.094	-.782
350	327	-.340	.152	.101	-1.075
350	328	-.356	.157	.164	-.995
350	329	-.358	.164	.270	-1.236
350	330	-.357	.144	.110	-1.264
350	331	-.188	.142	.229	-.752
350	332	-.190	.140	.227	-.740
350	333	-.222	.150	.243	-.884
350	334	-.282	.145	.202	-1.029
350	335	-.324	.175	.279	-1.220
350	336	-.335	.197	.271	-1.773
350	337	-.344	.212	.229	-2.063
350	338	-.167	.118	.182	-.830
350	339	-.178	.140	.242	-1.127
350	340	-.195	.148	.226	-1.348
350	341	-.219	.158	.230	-1.103
350	342	-.240	.136	.221	-.863
350	343	-.275	.185	.213	-1.658
350	344	-.279	.204	.233	-1.722
350	345	-.178	.149	.324	-1.255
350	346	-.190	.136	.166	-.929
350	347	-.210	.167	.204	-1.147
350	348	-.219	.180	.276	-1.545
350	349	-.219	.170	.249	-1.018
350	350	-.174	.158	.260	-1.051
350	351	-.229	.204	.319	-1.325
350	352	-.116	.138	.287	-.640
350	353	-.198	.196	.381	-1.483
350	354	-.107	.122	.302	-.719
350	355	-.138	.138	.408	-.905
350	356	-.126	.126	.226	-.637
350	357	-.145	.130	.212	-.676
350	358	-.138	.119	.331	-1.047
350	359	-.173	.140	.439	-.980
350	360	-.140	.141	.439	-.725
350	361	-.129	.148	.406	-.752
350	362	-.090	.144	.554	-1.166
350	401	-.290	.134	.093	-.861
350	402	-.274	.135	.104	-.824
350	403	-.266	.125	.109	-.758
350	404	-.258	.095	.013	-.585
350	405	-.294	.109	.014	-.665
350	406	-.318	.116	.064	-.803
350	407	-.334	.119	.038	-.751
350	408	-.273	.102	.096	-.710
350	409	-.304	.115	.029	-.733
350	410	-.284	.114	.040	-.713
350	411	-.350	.127	.002	-.812
350	412	-.327	.109	.013	-.705
350	413	-.360	.122	.045	-.769
350	414	-.304	.126	.153	-.770
350	415	-.363	.140	.167	-.969
350	416	-.316	.123	.080	-.902
350	417	-.294	.122	.094	-.827
350	418	-.327	.136	.093	-1.178
350	419	-.348	.144	.114	-1.270
350	420	-.312	.128	.065	-1.017
350	421	-.330	.135	.166	-.837
350	422	-.336	.141	.188	-.900
350	423	-.356	.145	.195	-.969
350	424	-.323	.139	.091	-.852
350	425	-.355	.147	.110	-.965
350	426	-.353	.115	-.005	-.732
350	427	-.327	.135	.141	-.840
350	428	-.308	.121	.054	-.759
350	429	-.355	.138	.071	-1.072
350	430	-.339	.133	.084	-.785
350	431	-.360	.140	.069	-.838
350	432	-.318	.122	.158	-.730
350	433	-.348	.136	.179	-.796
350	434	-.360	.132	.092	-.824
350	435	-.373	.138	.137	-.804
350	436	-.326	.116	.096	-.811
350	437	-.358	.132	.110	-.949
350	438	-.391	.154	.174	-1.024
350	439	-.405	.147	.145	-.946
350	440	-.367	.130	.082	-.818
350	441	-.402	.141	.061	-.897
350	442	-.380	.140	.088	-.945
350	443	-.405	.153	.126	-1.035
350	444	-.346	.127	.129	-.795
350	445	-.251	.182	.503	-.944
350	446	-.427	.192	.113	-1.483
350	447	-.416	.175	.116	-1.334
350	448	-.311	.132	.148	-.977
350	449	-.341	.149	.221	-.894
350	450	-.385	.145	.061	-.974
350	451	-.435	.154	.019	-1.055
350	452	-.364	.127	.014	-1.155
350	453	-.402	.172	.111	-1.314
350	454	-.403	.180	.066	-1.437
350	455	-.408	.154	.116	-1.072
350	456	-.349	.131	.071	-.809
350	457	-.376	.151	.121	-.840
350	458	-.383	.144	.073	-.955
350	459	-.391	.147	.092	-.940
350	460	-.336	.132	.150	-.858
350	461	-.205	.149	.422	-.772
350	462	-.168	.141	.398	-.740
350	463	-.228	.159	.361	-.940
350	464	-.344	.132	.129	-.816
350	465	-.493	.159	-.044	-1.145
350	466	-.412	.150	.020	-.988
350	467	-.395	.141	.014	-.952
350	468	-.348	.133	.063	-.810
350	469	-.164	.140	.395	-.684
350	470	-.134	.130	.314	-.600
350	471	-.139	.132	.217	-.605
350	472	-.118	.124	.276	-.524
350	473	-.342	.200	.303	-.952
350	474	-.550	.179	-.009	-1.280
350	475	-.531	.173	.019	-1.234
350	476	-.521	.160	-.119	-1.280
350	477	-.115	.134	.433	-.603
350	478	-.122	.129	.264	-.685
350	479	-.130	.125	.258	-.533
350	480	-.145	.105	.191	-.507
350	481	-.213	.142	.257	-.703
350	483	-.611	.227	.079	-1.571
350	484	-.604	.216	-.075	-1.814
350	485	-.067	.146	.410	-.675
350	486	.099	.115	.502	-.337
350	501	-.055	.118	.337	-.439
350	502	.141	.146	.710	-.405
350	503	-.086	.120	.311	-.503
350	504	.168	.149	.655	-.421
350	505	-.053	.111	.320	-.431
350	506	.068	.119	.507	-.337
350	507	.169	.131	.611	-.320
350	508	.082	.118	.492	-.341
350	509	.050	.110	.437	-.367
350	510	-.002	.127	.436	-.476
350	511	.059	.115	.433	-.360
350	512	.073	.118	.468	-.358
350	601	-.026	.243	.826	-.984
350	602	-.473	.163	.126	-1.024
350	603	-.206	.143	.232	-.673
350	604	-.156	.141	.302	-.984
350	605	-.116	.143	.358	-.746

APPENDIX A -- PRESSURE DATA: CONFIGURATION A: HOUSTON NATIONAL BANK

WD	TAP	CPMEAN	CPRMS	CPMAX	CPMIN
350	606	-.147	.236	.576	-1.204
350	607	-.183	.127	.373	-.737
350	608	-.125	.124	.385	-.614
350	609	-.135	.221	.501	-1.292
350	610	-.424	.170	.154	-.999
350	611	-.177	.134	.284	-.622
350	612	-.130	.121	.327	-.555
350	613	-.129	.129	.488	-.717
350	614	.110	.114	.563	-.304
350	615	-.040	.167	.449	-.927
350	701	-.071	.127	.418	-.611
350	702	-.110	.125	.314	-.577
350	703	-.100	.136	.423	-.726
350	704	-.045	.135	.442	-.662
350	705	-.112	.137	.407	-.813
350	706	-.089	.118	.334	-.615
350	707	-.029	.130	.404	-.462
350	708	-.132	.140	.388	-.651
350	709	-.103	.146	.353	-.748
350	710	-.097	.135	.414	-.645

WD	TAP	CPMEAN	CPRMS	CPMAX	CPMIN
350	711	-.009	.123	.401	-.441
350	712	.010	.122	.484	-.462
350	801	-.103	.110	.212	-.518
350	802	-.099	.116	.344	-.490
350	803	-.195	.143	.228	-.735
350	804	-.255	.143	.196	-.908
350	805	-.309	.144	.167	-1.019
350	806	-.044	.129	.473	-.454
350	807	-.144	.155	.447	-.778
350	808	-.277	.152	.225	-.828
350	809	-.072	.118	.273	-.500
350	810	-.085	.135	.322	-.734
350	811	-.088	.144	.336	-.723
350	812	-.177	.150	.493	-.717
350	813	-.337	.163	.059	-1.213
350	814	.004	.134	.469	-.565
350	815	-.045	.132	.402	-.543
350	816	.044	.140	.606	-.472
350	817	-.157	.130	.268	-.701
350	818	-.113	.141	.433	-.596

WD	TAP	CPMEAN	CPRMS	CPMAX	CPMIN
350	819	-.014	.129	.390	-.417
350	820	-.034	.128	.356	-.463
350	821	.012	.139	.522	-.429
350	822	-.038	.158	.669	-.606
350	823	-.066	.142	.465	-.792
350	901	-.041	.131	.511	-.503
350	902	-.138	.137	.367	-.631
350	903	-.184	.117	.174	-.678
350	904	-.129	.123	.240	-.539
350	905	-.180	.163	.250	-1.164
350	906	-.194	.134	.240	-.629
350	907	-.225	.146	.232	-.988
350	908	-.206	.147	.271	-.837
350	909	-.172	.134	.262	-.723
350	910	-.173	.197	.470	-.956
350	911	-.280	.142	.337	-.877
350	912	-.529	.225	.154	-1.630
350	913	-.303	.158	.288	-.972
350	914	-.089	.267	.670	-1.098
350	915	-.132	.258	.795	-1.179

APPENDIX A -- PRESSURE DATA: CONFIGURATION B: HOUSTON NATIONAL BANK

WD	TAP	CPMEAN	CPRMS	CPMAX	CPMIN
0	167	-.157	.124	.293	-.623
0	224	-.112	.113	.301	-.503
0	309	-.255	.133	.148	-.834
0	316	-.312	.124	.135	-.789
0	345	-.128	.097	.154	-.496
0	353	-.176	.118	.196	-.645
0	446	-.478	.209	.070	-1.790
2	167	-.117	.122	.328	-.582
2	224	-.103	.114	.249	-.469
2	309	-.239	.131	.205	-.810
2	316	-.287	.122	.089	-.704
2	345	-.122	.095	.169	-.478
2	353	-.166	.119	.233	-.716
2	446	-.460	.224	.209	-1.963
4	167	-.108	.119	.348	-.506
4	224	-.108	.112	.252	-.461
4	309	-.229	.124	.187	-.718
4	316	-.280	.119	.113	-.666
4	345	-.133	.097	.194	-.482
4	353	-.160	.116	.180	-.789
4	446	-.481	.243	.164	-1.832
6	167	-.082	.124	.300	-.518
6	224	-.116	.107	.246	-.468
6	309	-.225	.119	.148	-.780
6	316	-.289	.121	.085	-.682
6	345	-.067	.089	.234	-.368
6	353	-.113	.098	.241	-.496
6	446	-.439	.262	.194	-1.603
8	167	-.081	.123	.292	-.513
8	224	-.111	.112	.241	-.473
8	309	-.203	.128	.208	-.803
8	316	-.274	.129	.135	-.760
8	345	-.068	.093	.282	-.392
8	353	-.091	.101	.210	-.421
8	446	-.453	.265	.189	-1.834
10	167	-.059	.122	.404	-.495
10	224	-.113	.109	.301	-.491
10	309	-.190	.120	.202	-.734
10	316	-.263	.124	.154	-.748
10	345	-.069	.087	.269	-.356
10	353	-.090	.097	.303	-.451
10	446	-.434	.295	.407	-2.282
12	167	-.028	.122	.474	-.440
12	224	-.117	.110	.230	-.469
12	309	-.186	.122	.195	-.767
12	316	-.263	.130	.120	-.740
12	345	-.071	.092	.195	-.368
12	353	-.091	.099	.212	-.465
12	446	-.364	.300	.272	-1.971
14	167	-.021	.132	.439	-.511

WD	TAP	CPMEAN	CPRMS	CPMAX	CPMIN
14	224	-.123	.116	.211	-.534
14	309	-.186	.127	.210	-.736
14	316	-.259	.136	.145	-.751
14	345	-.083	.097	.268	-.409
14	353	-.097	.104	.219	-.450
14	446	-.407	.342	.388	-2.414
16	167	-.003	.130	.451	-.397
16	224	-.127	.110	.270	-.465
16	309	-.177	.121	.286	-.564
16	316	-.250	.139	.219	-.751
16	345	-.085	.095	.191	-.402
16	353	-.096	.096	.223	-.470
16	446	-.297	.304	.367	-1.953
18	167	.010	.135	.620	-.417
18	224	-.118	.102	.220	-.526
18	309	-.155	.107	.200	-.588
18	316	-.220	.122	.256	-.641
18	345	-.088	.097	.245	-.437
18	353	-.086	.092	.222	-.483
18	446	-.242	.316	.521	-1.867
20	167	.027	.132	.602	-.402
20	224	-.125	.118	.253	-.587
20	309	-.153	.125	.243	-.672
20	316	-.213	.146	.248	-.995
20	345	-.092	.096	.211	-.497
20	353	-.099	.101	.220	-.467
20	446	-.209	.303	.480	-1.897
70	167	.175	.190	1.059	-.514
70	224	-.340	.128	.033	-.867
70	309	-.304	.118	.064	-.744
70	316	-.242	.113	.125	-.696
70	345	-.232	.103	.150	-.582
70	353	-.936	.337	-.161	-2.161
70	446	.324	.197	1.359	-.222
72	167	.141	.175	.771	-.747
72	224	-.296	.114	.148	-.872
72	309	-.274	.108	.166	-.641
72	316	-.240	.106	.185	-.639
72	345	-.161	.101	.141	-.571
72	353	-.836	.309	-.169	-2.206
72	446	.329	.163	.986	-.160
74	167	.152	.192	.872	-.683
74	224	-.297	.117	.118	-.799
74	309	-.284	.111	.092	-.642
74	316	-.252	.112	.138	-.590
74	345	-.147	.100	.217	-.520
74	353	-.865	.332	-.086	-2.510
74	446	.332	.182	1.008	-.182
76	167	.133	.186	.862	-.598
76	224	-.304	.116	.104	-.685

WD	TAP	CPMEAN	CPRMS	CPMAX	CPMIN
76	309	-.298	.115	.056	-.857
76	316	-.265	.114	.112	-.686
76	345	-.140	.102	.162	-.518
76	353	-.975	.362	-.079	-2.629
76	446	.315	.171	.950	-.236
78	167	.105	.189	.761	-.735
78	224	-.285	.122	.083	-.726
78	309	-.289	.122	.066	-.741
78	316	-.250	.119	.136	-.643
78	345	-.169	.099	.137	-.530
78	353	-.847	.371	-.062	-2.433
78	446	.319	.174	.893	-.276
80	167	.090	.183	.719	-.747
80	224	-.305	.122	.088	-.821
80	309	-.318	.126	.089	-.800
80	316	-.266	.119	.228	-.784
80	345	-.161	.093	.202	-.483
80	353	-.940	.385	-.155	-2.735
80	446	.285	.185	.888	-.356
82	167	.069	.193	.774	-.697
82	224	-.287	.121	.208	-.688
82	309	-.303	.129	.148	-.820
82	316	-.253	.124	.155	-.729
82	345	-.193	.090	.105	-.465
82	353	-.778	.356	-.027	-2.428
82	446	.282	.204	.922	-.399
84	167	.070	.198	.735	-.854
84	224	-.301	.116	.109	-.775
84	309	-.323	.132	.086	-.998
84	316	-.266	.124	.179	-.867
84	345	-.203	.097	.113	-.540
84	353	-.742	.346	-.131	-2.378
84	446	.254	.218	.935	-.626
86	167	-.012	.194	.897	-.664
86	224	-.307	.124	.116	-.830
86	309	-.339	.148	.154	-1.135
86	316	-.288	.144	.135	-1.259
86	345	-.204	.094	.120	-.521
86	353	-.715	.327	-.113	-2.274
86	446	.184	.207	.980	-.447
88	167	-.046	.175	.586	-.704
88	224	-.285	.120	.102	-.769
88	309	-.319	.147	.119	-1.562
88	316	-.272	.136	.140	-1.254
88	345	-.207	.097	.116	-.540
88	353	-.559	.291	.079	-1.884
88	446	.153	.200	.927	-.457
90	167	-.099	.175	.620	-.720
90	224	-.313	.126	.030	-.924
90	309	-.350	.153	.064	-1.360

APPENDIX A -- PRESSURE DATA: CONFIGURATION B; HOUSTON NATIONAL BANK

WD	TAP	CPMEAN	CPRMS	CPMAX	CPMIN
90	316	-.309	.158	.097	-1.212
90	345	-.212	.091	.137	-.557
90	353	-.573	.276	-.047	-2.243
90	446	.126	.184	1.093	-.423
120	167	-.554	.219	.129	-1.840
120	224	-.381	.146	.079	-.936
120	309	-.427	.173	.235	-1.528
120	316	-.793	.319	-.027	-2.267
120	345	-.281	.095	.118	-.591
120	353	-.351	.110	.030	-1.019
120	446	.046	.284	1.064	-1.113
122	167	-.535	.211	.070	-1.558
122	224	-.411	.147	.051	-1.210
122	309	-.457	.175	.092	-1.383
122	316	-.926	.341	-.086	-2.687
122	345	-.290	.102	.069	-.674
122	353	-.384	.105	-.050	-.922
122	446	-.069	.284	1.165	-1.009
124	167	-.554	.218	.062	-1.741
124	224	-.381	.138	.135	-.915
124	309	-.418	.162	.072	-1.280
124	316	-.934	.357	-.093	-2.695
124	345	-.284	.092	.065	-.639
124	353	-.361	.109	.002	-.809
124	446	-.104	.289	1.220	-1.001
126	167	-.573	.236	.072	-1.668
126	224	-.367	.126	.072	-.889
126	309	-.389	.140	.129	-1.263
126	316	-.976	.355	-.121	-2.888
126	345	-.292	.112	.069	-.802
126	353	-.376	.107	-.033	-.851
126	446	-.148	.298	.894	-1.261
128	167	-.538	.226	.011	-1.801
128	224	-.373	.126	.118	-.880
128	309	-.395	.138	.089	-1.025
128	316	-1.061	.394	-.036	-2.748
128	345	-.342	.089	-.063	-.647
128	353	-.394	.112	.002	-1.042
128	446	-.212	.288	.807	-1.208
130	167	-.492	.193	.011	-2.122
130	224	-.353	.114	.055	-.812
130	309	-.368	.123	.182	-.937
130	316	-1.047	.378	-.057	-2.850
130	345	-.343	.088	-.045	-.653
130	353	-.383	.099	-.032	-.752
130	446	-.288	.247	.738	-1.019
132	167	-.451	.179	.034	-1.694
132	224	-.358	.114	-.021	-.784
132	309	-.364	.123	.042	-.924
132	316	-1.026	.382	.056	-2.394
132	345	-.344	.100	.019	-.743
132	353	-.395	.102	-.029	-.873
132	446	-.332	.214	.749	-1.107
134	167	-.441	.159	.008	-1.621
134	224	-.360	.112	-.007	-1.017
134	309	-.362	.117	.104	-.895
134	316	-1.005	.424	.360	-2.904
134	345	-.368	.095	-.030	-.708
134	353	-.408	.106	.015	-.788
134	446	-.367	.188	.580	-1.074
136	167	-.435	.161	.007	-1.539
136	224	-.352	.112	.032	-.811
136	309	-.355	.117	.005	-.793
136	316	-1.039	.448	.218	-2.968
136	345	-.369	.104	-.030	-.731
136	353	-.406	.107	-.039	-.958
136	446	-.378	.171	.415	-.981
138	167	-.422	.146	-.026	-1.407
138	224	-.346	.111	.082	-.688
138	309	-.338	.114	.089	-.782
138	316	-.835	.445	.333	-2.892
138	345	-.384	.101	-.058	-.763
138	353	-.417	.107	.064	-.839
138	446	-.402	.166	.526	-1.034
140	167	-.415	.130	.012	-1.140
140	224	-.335	.110	.002	-.772
140	309	-.327	.113	.017	-.785
140	316	-.788	.436	.430	-2.676
140	345	-.377	.092	-.048	-.716
140	353	-.409	.115	.174	-.846
140	446	-.399	.151	.480	-1.177
220	167	-.126	.107	.216	-.547
220	224	-.462	.299	.243	-2.141
220	309	.076	.226	.957	-.547
220	316	-.103	.143	.492	-.628
220	345	-.051	.100	.249	-.406
220	353	-.119	.099	.180	-.490
220	446	-.131	.106	.194	-.525
222	167	-.135	.103	.226	-.519
222	224	-.529	.326	.367	-2.092
222	309	.148	.222	1.059	-.518
222	316	-.092	.136	.712	-.627
222	345	-.035	.096	.301	-.322
222	353	-.131	.094	.161	-.462
222	446	-.138	.101	.228	-.473
224	167	-.140	.107	.250	-.482
224	224	-.571	.306	.409	-2.373
224	309	.201	.218	1.024	-.498
224	316	-.075	.139	.530	-.593
224	345	-.018	.102	.433	-.342
224	353	-.141	.096	.138	-.459
224	446	-.145	.108	.216	-.521
226	167	-.166	.113	.196	-.562
226	224	-.664	.319	.265	-2.322
226	309	.249	.218	1.057	-.432
226	316	-.063	.146	.588	-.595
226	345	-.012	.108	.433	-.362
226	353	-.170	.101	.169	-.509
226	446	-.180	.114	.251	-.547
228	167	-.189	.117	.232	-.640
228	224	-.663	.308	.223	-1.928
228	309	.256	.208	1.062	-.427
228	316	-.053	.146	.468	-.523
228	345	.014	.113	.474	-.339
228	353	-.183	.108	.188	-.511
228	446	-.213	.121	.289	-.639
230	167	-.217	.111	.250	-.635
230	224	-.669	.292	.173	-2.061
230	309	.271	.202	1.196	-.407
230	316	-.047	.146	.617	-.516
230	345	.030	.111	.515	-.381
230	353	-.189	.099	.110	-.543
230	446	-.231	.112	.269	-.607
232	167	-.224	.117	.231	-.652
232	224	-.644	.302	.343	-2.746
232	309	.261	.205	.971	-.424
232	316	-.055	.149	.581	-.534
232	345	.023	.115	.572	-.390
232	353	-.192	.102	.192	-.558
232	446	-.235	.118	.187	-.713
234	167	-.251	.114	.094	-.665
234	224	-.568	.298	.288	-1.782
234	309	.262	.200	.954	-.366
234	316	-.077	.145	.411	-.516
234	345	.044	.114	.458	-.295
234	353	-.184	.104	.200	-.504
234	446	-.263	.115	.109	-.689
236	167	-.266	.111	.110	-.631
236	224	-.533	.308	.749	-2.120
236	309	.282	.197	.994	-.420
236	316	-.081	.143	.532	-.603
236	345	.048	.107	.444	-.305
236	353	-.191	.102	.158	-.624
236	446	-.262	.111	.167	-.635
238	167	-.287	.119	.163	-.771
238	224	-.473	.330	.443	-2.567
238	309	.321	.194	1.299	-.342
238	316	-.104	.145	.591	-.636
238	345	.069	.122	.547	-.357
238	353	-.205	.104	.208	-.586

APPENDIX A -- PRESSURE DATA: CONFIGURATION B; HOUSTON NATIONAL BANK

WD	TAP	CPMEAN	CPRMS	CPMAX	CPMIN
238	446	-.287	.118	.165	-.812
240	167	-.294	.120	.097	-.786
240	224	-.416	.277	.456	-1.915
240	309	.316	.197	1.094	-.382
240	316	-.111	.141	.527	-.625
240	345	.077	.124	.638	-.303
240	353	-.204	.100	.193	-.694
240	446	-.280	.118	.115	-.703
290	167	-.431	.143	.082	-1.103
290	224	.334	.175	1.019	-.208
290	309	-.504	.303	.432	-1.805
290	316	-.415	.113	.004	-.854
290	345	-.091	.230	.544	-.979
290	353	-.298	.115	.117	-.638
290	446	-.356	.120	.033	-.788
292	167	-.459	.147	.047	-1.151
292	224	.283	.186	.914	-.402
292	309	-.601	.379	.516	-2.450
292	316	-.412	.135	.025	-.866
292	345	-.213	.282	.681	-1.461
292	353	-.302	.131	.223	-.796
292	446	-.351	.119	.040	-.779
294	167	-.437	.154	.075	-1.167
294	224	.270	.186	.923	-.350
294	309	-.686	.337	.330	-2.283
294	316	-.415	.123	.064	-.837
294	345	-.185	.271	.595	-1.519
294	353	-.315	.117	.139	-.729
294	446	-.331	.130	.140	-.765
296	167	-.488	.152	-.032	-1.236
296	224	.252	.173	.892	-.343
296	309	-.805	.334	.187	-2.086
296	316	-.417	.121	.046	-.922
296	345	-.307	.270	.358	-1.522
296	353	-.327	.113	.097	-.788
296	446	-.324	.122	.033	-.838
298	167	-.507	.158	.010	-1.246
298	224	.204	.164	.887	-.428
298	309	-.842	.356	.085	-2.727
298	316	-.415	.123	.005	-1.087
298	345	-.404	.252	.254	-2.012
298	353	-.326	.112	.315	-.687
298	446	-.320	.117	.130	-.790
300	167	-.503	.155	-.027	-1.206
300	224	.194	.166	.774	-.385
300	309	-.996	.397	.141	-2.699
300	316	-.433	.125	-.042	-.967
300	345	-.343	.291	.354	-1.681
300	353	-.335	.116	.094	-.713
300	446	-.310	.119	.118	-.821
302	167	-.518	.159	.214	-1.119
302	224	.175	.171	.848	-.493
302	309	-1.055	.391	-.028	-3.048
302	316	-.440	.135	.088	-1.114
302	345	-.461	.313	1.169	-1.591
302	353	-.349	.113	.093	-.742
302	446	-.310	.119	.686	-.819
304	167	-.546	.167	-.009	-1.333
304	224	.149	.167	.699	-.442
304	309	-.962	.371	-.035	-2.368
304	316	-.438	.147	.153	-1.169
304	345	-.518	.298	.271	-1.986
304	353	-.331	.108	.031	-.730
304	446	-.323	.122	.106	-.723
306	167	-.531	.168	-.011	-1.362
306	224	.119	.166	.863	-.376
306	309	-.881	.352	.008	-2.401
306	316	-.440	.165	.060	-1.237
306	345	-.469	.331	.386	-1.962
306	353	-.325	.121	.163	-.845
306	446	-.302	.116	.044	-.729
308	167	-.521	.172	.069	-1.362
308	224	.115	.161	.869	-.388
308	309	-.901	.378	-.062	-2.742
308	316	-.450	.157	.046	-1.198
308	345	-.573	.275	.183	-1.663
308	353	-.322	.112	.034	-.743
308	446	-.290	.123	.204	-.757
310	167	-.547	.196	.024	-1.447
310	224	.108	.164	.766	-.434
310	309	-.836	.401	-.043	-2.810
310	316	-.488	.187	.079	-1.556
310	345	-.539	.303	.273	-1.837
310	353	-.329	.115	.105	-.779
310	446	-.312	.132	.245	-.826
312	167	-.544	.185	-.018	-1.738
312	224	.101	.155	.724	-.428
312	309	-.695	.339	-.008	-2.520
312	316	-.509	.183	-.036	-1.485
312	345	-.589	.289	.281	-1.873
312	353	-.316	.111	.104	-.681
312	446	-.309	.122	.086	-.852
314	167	-.540	.193	.023	-1.477
314	224	.101	.154	.708	-.367
314	309	-.585	.303	-.037	-2.795
314	316	-.494	.190	.053	-1.453
314	345	-.621	.263	.161	-2.211
314	353	-.275	.110	.106	-.642
314	446	-.309	.133	.162	-.913
316	167	-.497	.172	.030	-1.192
316	224	.092	.154	.535	-.471
316	309	-.503	.279	.041	-2.534
316	316	-.493	.181	.033	-1.579
316	345	-.579	.249	.096	-1.746
316	353	-.255	.114	.102	-.641
316	446	-.311	.119	.168	-.706
318	167	-.483	.185	.031	-1.198
318	224	.089	.150	.627	-.461
318	309	-.481	.248	.008	-2.403
318	316	-.503	.179	.080	-1.697
318	345	-.597	.235	.114	-1.764
318	353	-.253	.104	.084	-.663
318	446	-.300	.125	.111	-.770
320	167	-.495	.199	.111	-1.916
320	224	.083	.142	.591	-.486
320	309	-.429	.173	.049	-1.744
320	316	-.514	.187	.136	-1.601
320	345	-.620	.234	-.077	-2.112
320	353	-.230	.101	.119	-.617
320	446	-.319	.129	.140	-.794