WIND-TUNNEL STUDY OF
1999 BROADWAY, DENVER

by

J. A. Peterka* and J. E. Cermak**

for

The Lawder Corporation of Denver
c/o C. W. Fentress and Associates
Kittredge Building
511 Sixteenth Street, Suite 600
Denver, Colorado 80202

Fluid Mechanics and Wind Engineering Program
Fluid Dynamics and Diffusion Laboratory
Department of Civil Engineering
Colorado State University
Fort Collins, Colorado 80523

CSU Project 2-95270

December 1982

*Associate Professor
**Professor-in-Charge, Fluid Mechanics and
Wind Engineering Program

CER82-83JAP-JEC22

TABLE OF CONTENTS

LIST OF FIGURES

LIST OF TABLES

LIST OF SYMBOLS

Symbol	Definition
U	Local mean velocity
D	Characteristic dimension (building height, width, etc.)
ν, ρ	Kinematic viscosity and density of approach flow
$\frac{UD}{\nu}$	Reynolds number
E	Mean voltage
A, B, n	Constants
U_{rms}	Root-mean-square of fluctuating velocity
E_{rms}	Root-mean-square of fluctuating voltage
U_∞	Reference mean velocity outside the boundary layer
X, Y	Horizontal coordinates
Z	Height above surface
δ	Height of boundary layer
T_u	Turbulence intensity $\frac{U_{rms}}{U_\infty}$ or $\frac{U_{rms}}{U}$
$C_{p_{mean}}$	Mean pressure coefficient, $\frac{(p-p_\infty)_{mean}}{0.5\ \rho\ U_\infty^2}$
$C_{p_{rms}}$	Root-mean-square pressure coefficient, $\frac{\left((p-p_\infty)-(p-p_\infty)_{mean}\right)_{rms}}{0.5\ \rho\ U_\infty^2}$
$C_{p_{max}}$	Peak maximum pressure coefficient, $\frac{(p-p_\infty)_{max}}{0.5\ \rho\ U_\infty^2}$
$C_{p_{min}}$	Peak minimum pressure coefficient, $\frac{(p-p_\infty)_{min}}{0.5\ \rho\ U_\infty^2}$
$(\ )_{min}$	Minimum value during data record
$(\ )_{max}$	Maximum value during data record

Symbol	Definition
p	Fluctuating pressure at a pressure tap on the structure
p_∞	Static pressure in the wind tunnel above the model
F_x, F_y	Forces in X, Y direction
A_R	Reference Area
CF_X	Force coefficient, X direction, $\frac{F_x}{A_R \; 0.5\rho \; U_\infty^2}$
CF_Y	Force coefficient, Y direction, $\frac{F_y}{A_R \; 0.5\rho \; U_\infty^2}$

1. INTRODUCTION

1.1 General

A significant characteristic of modern building design is lighter cladding and more flexible frames. These features produce an increased vulnerability of glass and cladding to wind damage and result in larger deflections of the building frame. In addition, increased use of pedestrian plazas at the base of the buildings has brought about a need to consider the effects of wind and gustiness in the design of these areas.

The building geometry itself may increase or decrease wind loading on the structure. Wind forces may be modified by nearby structures which can produce beneficial shielding or adverse increases in loading. Overestimating loads results in uneconomical design; underestimating may result in cladding or window failures. Tall structures have historically produced unpleasant wind and turbulence conditions at their bases. The intensity and frequency of objectionable winds in pedestrian areas is influenced both by the structure shape and by the shape and position of adjacent structures.

Techniques have been developed for wind tunnel modeling of proposed structures which allow the prediction of wind pressures on cladding and windows, overall structural loading, and also wind velocities and gusts in pedestrian areas adjacent to the building. Information on sidewalk-level gustiness allows plaza areas to be protected by design changes before the structure is constructed. Accurate knowledge of the intensity and distribution of the pressures on the structure permits adequate but economical selection of cladding strength to meet selected maximum design winds and overall wind loads for the design of the frame for flexural control.

Modeling of the aerodynamic loading on a structure requires special consideration of flow conditions in order to guarantee similitude between model and prototype. A detailed discussion of the similarity requirements and their wind-tunnel implementation can be found in references (1), (2), and (3). In general, the requirements are that the model and prototype be geometrically similar, that the approach mean velocity at the building site have a vertical profile shape similar to the full-scale flow, that the turbulence characteristics of the flows be similar, and that the Reynolds number for the model and prototype be equal.

These criteria are satisfied by constructing a scale model of the structure and its surroundings and performing the wind tests in a wind tunnel specifically designed to model atmospheric boundary-layer flows. Reynolds number similarity requires that the quantity UD/ν be similar for model and prototype. Since ν, the kinematic viscosity of air, is identical for both, Reynolds numbers cannot be made precisely equal with reasonable wind velocities. To accomplish this the air velocity in the wind tunnel would have to be as large as the model scale factor times the prototype wind velocity, a velocity which would introduce unacceptable compressibility effects. However, for sufficiently high Reynolds numbers ($>2\times10^4$) the pressure coefficient at any location on the structure will be essentially constant for a large range of Reynolds numbers. Typical values encountered are 10^7-10^8 for the full-scale and 10^5-10^6 for the wind-tunnel model. In this range acceptable flow similarity is achieved without precise Reynolds number equality.

1.2 The Wind-Tunnel Test

The wind-engineering study is performed on a building or building group modeled at scales ranging from 1:150 to 1:400. The building model

is constructed of clear plastic fastened together with screws. The structure is modeled in detail to provide accurate flow patterns in the wind passing over the building surfaces. The building under test is often located in a surrounding where nearby buildings or terrain may provide beneficial shielding or adverse wind loading. To achieve similarity in wind effects the area surrounding the test building is also modeled. A flow visualization study is first made (smoke is used to make the air currents visible) to define overall flow patterns and identify regions where local flow features might cause difficulties in building curtain-wall design or produce pedestrian discomfort.

The test model, equipped with pressure taps (200 to 600 or more), is exposed to an appropriately modeled atmospheric wind in the wind tunnel and the fluctuating pressure at each tap measured electronically. The model, and the modeled area, are rotated 10 or 15 degrees and another set of data recorded for each pressure tap. Normally, 24 or 36 sets of data (360 degrees of turning) are taken; however, when flow visualization or recorded data indicate high pressure regions of small azimuthal extent, data is obtained in smaller azimuthal steps.

Data are recorded, analyzed and processed by an on-line computerized data-acquisition system. Pressure coefficients of several types are calculated by the computer for each reading on each piezometer tap and are printed in tabular form as computer readout. Using wind data applicable to the building site, representative wind velocities are selected for combination with measured pressures on the building model. Integration of test data with wind data results in prediction of peak local wind pressures for design of glass or cladding and may include overall forces and moments on the structure (by floor if desired) for design of

the structural frame. Pressure contours are drawn on the developed building surfaces showing the intensity and distribution of peak wind loads on the building. These results may be used to divide the building into zones where lighter or heavier cladding or glass may be desirable.

Based on the visualization (smoke) tests and on a knowledge of heavy pedestrian use areas, a dozen or more locations may be chosen at the base of the building where wind velocities can be measured to determine the relative comfort or discomfort of pedestrians in plaza areas, near building entrances, near building corners, or on sidewalks. Usually a reference pedestrian position is also tested to determine whether the wind environment in the building area is better or worse than the environment a block or so away in an undisturbed area.

The following pages discuss in greater detail the procedures followed and the equipment and data collecting and processing methods used. In addition, the data presentation format is explained and the implications of the data are discussed.

2. EXPERIMENTAL CONFIGURATION

2.1 Wind Tunnel

Wind-engineering studies are performed in the Fluid Dynamics and Diffusion Laboratory at Colorado State University (Figure 1). Three large wind tunnels are available for wind loading studies depending on the detailed requirements of the study. The wind tunnel used for this investigation is shown in Figure 2. All tunnels have a flexible roof adjustable in height to maintain a zero pressure gradient along the test section. The mean velocity can be adjusted continuously in each tunnel to the maximum velocity available.

2.2 Model

In order to obtain an accurate assessment of local pressures using piezometer taps, models are constructed to the largest scale that does not produce significant blockage in the wind-tunnel test section. The models are constructed of 1/2 in. thick Lucite plastic and fastened together with metal screws. Significant variations in the building surface, such as mullions, are machined into the plastic surface. Piezometer taps (1/16 in. diameter) are drilled normal to the exterior vertical surfaces in rows at several or more elevations between the bottom and top of the building. Similarly, taps are placed in the roof and on any sloping, protruding, or otherwise distinctive features of the building that might need investigation.

Pressure tap locations are chosen so that the entire surface of the building can be investigated for pressure loading and at the same time permit critical examination of areas where experience has shown that maximum wind effects may be expected to occur. Locations of the pressure taps for this study are shown in Figure 3. Dimensions are

given both for full-scale building (in ft) and for model (in in.). The pressure tap numbers are shown adjacent to the taps.

The pressure tests are sometimes made in two stages. In the first stage measurements are made on the initial distribution of pressure taps. If it becomes apparent from the data that the loading on the building is being influenced by some unsuspected geometry of the building or adjacent structures, additional pressure taps are installed in the critical areas. The locations of the taps are selected so that the maximum loading can be detected and the area over which this loading is acting can be defined. Any added taps are also shown in Figure 3.

A circular area 750 to 2000 ft in radius depending on model scale and characteristics of the surrounding buildings and terrain is modeled in detail. Structures within the modeled region are made from styrofoam and cut to the individual building geometries. They are mounted on the turntable in their proper locations. Significant terrain features are included as needed. The model is mounted on a turntable (Figure 2) near the downwind end of the test section. Any buildings or terrain features which do not fit on the turntable are placed on removable pieces which are placed upwind of the turntable for appropriate wind directions. A plan view of the building and its surroundings is shown in Figure 4. The turntable is calibrated to indicate azimuthal orientation to 0.1 degree.

The region upstream from the modeled area is covered with a randomized roughness constructed using various sized cubes placed on the floor of the wind tunnel. Different roughness sizes may be used for different wind directions. Spires are installed at the test-section entrance to provide a thicker boundary layer than would otherwise be

available. The thicker boundary layer permits a somewhat larger scale model than would otherwise be possible. The spires are approximately triangularly shaped pieces of 1/2 in. thick plywood 6 in. wide at the base and 1 in. wide at the top, extending from the floor to the top of the test section. They are placed so that the broad side intercepts the flow. A barrier approximately 8 in. high is placed on the test-section floor downstream of the spires to aid in development of the boundary-layer flow.

The distribution of the roughness cubes and the spires in the roughened area was designed to provide a boundary-layer thickness of approximately 4 ft, a velocity profile power-law exponent similar to that expected to occur in the region approaching the modeled area for each wind direction (a number of wind directions may have the same approach roughness). A photograph of the completed model in the wind tunnel is shown in Figure 5. The wind-tunnel ceiling is adjusted after placement of the model to obtain a zero pressure gradient along the test section.

3. INSTRUMENTATION AND DATA ACQUISITION

3.1 Flow Visualization

Making the air flow visible in the vicinity of the model is helpful (a) in understanding and interpreting mean and fluctuating pressures, (b) in defining zones of separated flow and reattachment and zones of vortex formation where pressure coefficients may be expected to be high and (c) in indicating areas where pedestrian discomfort may be a problem. Titanium tetrachloride smoke is released from sources on and near the model to make the flow lines visible to the eye and to make it possible to obtain motion picture records of the tests. Conclusions obtained from these smoke studies are discussed in Sections 4.1 and 5.1.

3.2 Pressures

Mean and fluctuating pressures are measured at each of the pressure taps on the model structure. Data are obtained for 24 or 36 wind directions, rotating the entire model assembly in a complete circle. Seventy-six pieces of 1/16 in. I.D. plastic tubing are used to connect 76 pressure ports at a time to an 80 tap pressure switch mounted inside the model. The switch was designed and fabricated in the Fluid Dynamics and Diffusion Laboratory to minimize the attenuation of pressure fluctuations across the switch. Each of the 76 measurement ports is directed in turn by the switch to one of four pressure transducers mounted close to the switch. The four pressure input taps not used for transmitting building surface pressures are connected to a common tube leading outside the wind tunnel. This arrangement provides both a means of performing in-place calibration of the transducers and, by connecting this tube to a pitot tube mounted inside the wind tunnel, a means of automatically monitoring the tunnel speed. The switch is operated by means of a shaft projecting through

the floor of the wind tunnel. A computer-controlled stepping motor steps the switch into each of the 20 required positions. The computer keeps track of switch position but a digital readout of position is provided at the wind tunnel.

The pressure transducers used are setra differential transducers (Model 237) with a 0.10 psid range. Reference pressures are obtained by connecting the reference sides of the four transducers, using plastic tubing, to the static side of a pitot-static tube mounted in the wind tunnel free stream above the model building. In this way the transducer measures the instantaneous difference between the local pressures on the surface of the building and the static pressure in the free stream above the model.

Output from the pressure transducers is fed to an on-line data acquisition system consisting of a Hewlett-Packard 21 MX computer, disk unit, card reader, printer, Digi-Data digital tape drive and a Preston Scientific analog-to-digital converter. The data are processed immediately into pressure coefficient form as described in Section 4.3 and stored for printout or further analysis.

All four transducers are recorded simultaneously for 16 seconds at a 250 sample per second rate. The results of an experiment to determine the length of record required to obtain stable mean and rms (root-mean-square) pressures and to determine the overall accuracy of the pressure data acquisition system is shown in Figure 6. A typical pressure port record was integrated for a number of different time periods to obtain the data shown. Examination of a large number of pressure taps showed that the overall accuracy for a 16 second period is, in pressure coefficient form, 0.03 for mean pressures, 0.1 for peak pressures, and 0.01 for rms pressures. Pressure coefficients are defined in Section 4.3.

3.3 Velocity

Mean velocity and turbulence intensity profiles are measured upstream of the model to determine that an approach boundary-layer flow appropriate to the site has been established. Tests are made at one wind velocity in the tunnel. This velocity is well above that required to produce Reynolds number similarity between the model and the prototype as discussed in Section 1.1.

In addition, mean velocity and turbulence intensity measurements are made 5 to 7 ft (prototype) above the surface at a dozen or more locations on and near the building for 16 wind directions. The measurement locations are shown on Figure 4. The surface measurements are indicative of the wind environment to which a pedestrian at the measurement location would be subjected. The locations are chosen to determine the degree of pedestrian comfort or discomfort at the building corners where relatively severe conditions frequently are found, near building entrances and on adjacent sidewalks where pedestrian traffic is heavy, and in open plaza areas. In most studies a reference pedestrian position, located about a block away, is also tested. These data are helpful in evaluating the degree of pedestrian comfort or discomfort in the proposed plaza area in terms of the undisturbed environment in the immediate vicinity.

Measurements are made with a single hot-wire anemometer mounted with its axis vertical. The instrumentation used is a Thermo Systems constant temperature anemometer (Model 1050) with a 0.001 in. diameter platinum film sensing element 0.020 in. long. Output is directed to the on-line data acquisition system for analysis.

Calibration of the hot-wire anemometer is performed by comparing output with the pitot-static tube in the wind tunnel. The calibration

data are fit to a variable exponent King's Law relationship of the form

$$E^2 = A + BU^n$$

where E is the hot-wire output voltage, U the velocity and A, B, and n are coefficients selected to fit the data. The above relationship was used to determine the mean velocity at measurement points using the measured mean voltage. The fluctuating velocity in the form U_{rms} (root-mean-square velocity) was obtained from

$$U_{rms} = \frac{2\ E\ E_{rms}}{B\ n\ U^{n-1}}$$

where E_{rms} is the root-mean-square voltage output from the anemometer. For interpretation all turbulence measurements for pedestrian winds were divided by the mean velocity outside the boundary-layer U_∞. Turbulence intensity in velocity profile measurements used the local mean velocity.

4. RESULTS

4.1 Flow Visualization

A film is included as part of this report showing the characteristics of flow about the structure using smoke to make the flow visible. A listing of the contents of the film is shown in Table 1. Several features can be noted from the visualization. As with all large structures, wind approaching the building is deflected down to the plaza level, up over the structure and around the sides. A description of the smoke test results emphasizing flow patterns of concern relative to possible high-wind load areas and pedestrian comfort is given in Section 5.1.

4.2 Velocity

Velocity and turbulence profiles are shown in Figure 7. Profiles were taken upstream from the model which are characteristic of the boundary layer approaching the model and sometimes at the building site with building removed. The boundary-layer thickness, δ, is shown in Figure 7. The corresponding prototype value of δ for this study is also shown in the figure. This value was established as a reasonable height for this study. The mean velocity profile approaching the modeled area has the form

$$\frac{U}{U_\infty} = \left(\frac{z}{\delta}\right)^n .$$

The exponent n for the approach flow established for this study is shown in Figure 7.

Profiles of longitudinal turbulence intensity in the flow approaching the modeled area are shown in Figure 7. The turbulence intensities are appropriate for the approach mean velocity profile selected. For the velocity profiles, turbulence intensity is defined

as the root-mean-square about the mean of the longitudinal velocity fluctuations divided by the local mean velocity U,

$$Tu = \frac{U_{rms}}{U} .$$

Velocity data obtained at each of the pedestrian measurement locations shown in Figure 4 are listed in Table 2 as mean velocity U/U_∞, turbulence intensity U_{rms}/U_∞, and largest effective gust

$$U_{pk} = \frac{U + 3U_{rms}}{U_\infty} .$$

These data are plotted in polar form in Figure 8. Measurements were taken 5 to 7 ft above the ground surface. A site map is superimposed on the polar plots to aid in visualization of the effects of the nearby structures on the velocity and turbulence magnitudes. An analysis of these wind data is given in Section 5.2.

To enable a quantitative assessment of the wind environment, the wind-tunnel data were combined with wind frequency and direction information obtained at the local airport. Table 3 shows wind frequency by direction and magnitude obtained from summaries published by the National Weather Service. These data, usually obtained at an elevation of about 30-40 ft, were converted to velocities at the reference velocity height for the wind-tunnel measurements and combined with the wind-tunnel data to obtain cumulative probability distributions (percent time a given velocity is exceeded) for wind velocity at each measuring location. The percentage times were summed by wind direction to obtain a percent time exceeded at each measuring position independent of wind direction (but accounting for the fact that the wind blows from different directions with varying frequency). These results are plotted in Figure 9.

Interpretation of Figure 9 is aided by a description of the effects of wind of various magnitudes on people. The earliest quantitative description of wind effects was established by Sir Francis Beaufort in 1806 for use at sea and is still in use today. Several recent investigators have added to the knowledge of wind effects on pedestrians. These investigations along with suggested criteria for acceptance have been summarized by Penwarden and Wise (4) and Melbourne (5). The Beaufort scale (from ref. 4), based on mean velocity only, is reproduced as Table 4 including qualitative descriptions of wind effects. Table 4 suggests that mean wind speeds below 12 mph are of minor concern and that mean speeds above 24 mph are definitely inconvenient. Quantitative criteria for acceptance from reference 5 are superimposed as dashed lines on Figure 9. The peak gust curves shown in Figure 9 are the percent of time during which a short gust of the stated magnitude could occur (say about one of these gusts per hour). Implications of the data plotted in Figure 9 are presented in Section 5.2.

Because some pedestrian wind measuring positions are purposely chosen at sites where the smoke tests showed large velocities of small spacial extent, the general wind environment about the structure may be less severe than one might infer from a strict analysis of Table 2 and Figure 9.

4.3 Pressures

For each of the pressure taps examined at each wind direction, the data record is analyzed to obtain four separate pressure coefficients. The first is the mean pressure coefficient

$$C_{p_{mean}} = \frac{(p-p_\infty)_{mean}}{0.5\ \rho\ U_\infty^{\ 2}}$$

where the symbols are as defined in the List of Symbols. It represents the mean of the instantaneous pressure difference between the building pressure tap and the static pressure in the wind tunnel above the building model, nondimensionalized by the dynamic pressure

$$0.5\ \rho\ U_\infty^{\ 2}$$

at the reference velocity position. This relationship produces a dimensionless coefficient which indicates that the mean pressure difference between building and ambient wind at a given point on the structure is some fraction less or some fraction greater than the undisturbed wind dynamic pressure near the upper edge of the boundary layer. Using the measured coefficient, prototype mean pressure values for any wind velocity may be calculated.

The magnitude of the fluctuating pressure is obtained by the rms pressure coefficient

$$C_{p_{rms}} = \frac{\left((p-p_\infty) - (p-p_\infty)_{mean}\right)_{rms}}{0.5\ \rho\ U_\infty^{\ 2}}$$

in which the numerator is the root-mean-square of the instantaneous pressure difference about the mean .

If the pressure fluctuations followed a Gaussian probability distribution, no additional data would be required to predict the

frequency with which any given pressure level would be observed. However, the pressure fluctuations do not, in general, follow a Gaussian probability distribution so that additional information is required to show the extreme values of pressure expected. The peak maximum and peak minimum pressure coefficients are used to determine these values:

$$C_{p_{max}} = \frac{(p-p_\infty)_{max}}{0.5\ \rho\ U_\infty^{\ 2}}$$

$$C_{p_{min}} = \frac{(p-p_\infty)_{min}}{0.5\ \rho\ U_\infty^{\ 2}}$$

The values of $p-p_\infty$ which were digitized at 250 samples per second for 16 seconds, representing about one hour of time in the full-scale, are examined individually by the computer to obtain the most positive and most negative values during the 16-second period. These are converted to $C_{p_{max}}$ and $C_{p_{min}}$ by nondimensionalizing with the free stream dynamic pressure.

The four pressure coefficients are calculated by the on-line data acquisition system computer and tabulated along with the approach wind azimuth in degrees from true north. The list of coefficients is included as Appendix A. The pressure tap code numbers used in the appendix are explained in Figure 3.

To determine the largest peak loads acting at any point on the structure for cladding design purposes, the pressure coefficients for all wind directions were searched to obtain, at each pressure tap, the largest peak positive and peak negative pressure coefficients. Table 6 lists the larger values and associated wind directions. Included in Section 5.3 is an analysis of the coefficients of Table 6 including the maximum values obtained and where they occurred on the building.

The pressure coefficients of Table 6 can be converted to full-scale loads by multiplication by a suitable reference pressure selected for the field site. This reference pressure is represented in the equations for pressure coefficients by the $0.5\ \rho\ U_\infty^2$ denominator. This value is the dynamic pressure associated with an hourly mean wind at the reference velocity measurement position at the edge of the boundary layer. In general, the method of arriving at a design reference pressure for a particular site involves selection of a design wind velocity, translation of the velocity to an hourly mean wind at the reference velocity location and conversion to a reference pressure. Selection of the design velocity can be made from statistical analysis of extreme wind data or selected from wind maps contained in the proposed wind loading code ANSI A58.1 of the American National Standards Institute (6). The calculation of reference pressure for this study is shown in Table 5. The factor used in Table 5 to reduce gust winds to hourly mean winds is given in reference (7).

The reference pressure associated with the design hourly mean velocity at the reference velocity location can be used directly with the peak-pressure coefficients to obtain peak local design wind loads for cladding design. Local, instantaneous peak loads on the full-scale building suitable for cladding design were computed by multiplying the reference pressure of Table 5 by the peak coefficients of Table 6 and are listed as peak pressures in that table. The maximum psf loads given at each tap location are the largest peak positive and peak negative values found in the tests. For ease in visualizing the loads on the structure, contours of equal peak pressures for cladding load shown in Table 6 have been plotted on developed elevation views of the structure,

Figure 10. If a data point which is taken in the basic model configuration is retaken in a resolution configuration, the data are averaged in preparing Figure 10. For control of water infiltration from outside to inside, the largest positive (inward-acting) pressure at each tap location is tabulated in Table 6.

For glass design pressures, a glass load factor is used to account for the different duration between measured peak pressures and the one minute loading commonly used in glass design charts. The design pressure used for glass is normally less than the peak pressures used for cladding design because of the static fatigue property of glass which can withstand higher pressures for short duration loads than for long duration loads. Recent research (8) indicates that the period of application of the peak pressures reported herein is about 5-10 seconds or less. If a glass design is based on these peak-pressure values, then a glass strength associated with this duration load should be used. Because glass design charts are normally based on some alternate load duration -- usually one minute -- then some reduction in peak loads should be made. An estimate of a load reduction factor can be obtained from an empirical relation of glass strength as a function of load duration. Current glass selection charts showing glass strength as a function of load duration (9) and older references (10) indicate the following load reduction factors:

	ref 9	ref 10
annealed float	0.80	0.81
heat strengthened	0.94	
tempered	0.97	0.98

Loadings appropriate for glass design can be computed by multiplying the peak-pressure loads of Table 6 by these load factors.

4.4 Forces and Moments

Force coefficients in the horizontal X and Y directions and moment coefficients about the X, Y, and Z axes with the origin at ground level at the base of the building with Z axis vertical may be computed for all wind directions tested by integration of mean pressures on the building. Overall forces and moments acting on the full-scale building due to wind loading which are useful in designing the structural framing of the proposed building may be obtained from use of these coefficients.

Force coefficients were computed for each floor for each wind direction using the equations shown below.

$$CF_X = \frac{F_X}{A_R \; 0.5 \; \rho \; U_\infty^{\;2}} \qquad CF_Y = \frac{F_Y}{A_R \; 0.5 \; \rho \; U_\infty^{\;2}}$$

Terms and symbols used in the equations are defined in the List of Symbols and the axes are defined for the building in Figure 3. Force coefficients CF_X and CF_Y were computed for the horizontal forces acting along the X and Y axes using the mean pressure coefficient at each pressure tap. A_R represents a constant reference area for nondimensionalization of the forces and moments.

The total forces acting on the full-scale building for each floor and wind direction were computed by multiplying the above coefficients by the appropriate full-scale reference area, by the reference pressure of Table 5, and by a gust load factor selected for an appropriate wind gust duration. The gust load factor, shown in Table 5, was selected to increase the loads from an hourly mean load to that of a gust whose duration would be sufficient for its effect to be fully felt by the structure. A table of gust load factors for various gust durations is

incorporated in Table 5 so that force and moment data of Table 7 may be adjusted to a different load duration if desired.

The forces obtained at each floor were used to obtain load, shear, and moment diagrams for the building for each wind direction. The shear diagram, in kips, was obtained by algebraic sum of all forces in each coordinate direction acting above the floor of interest. The load diagram, in psf, was obtained by dividing the shear values by their contributing areas (listed in Table 7). The moment diagram, in 1000 ft-kips, was obtained by integration of the shear values so that the moment due to forces acting above the floor level of interest was calculated. The sign of the moment was established by the right-hand rule about an X', Y' axis through the floor of interest. Moments about the Z axis were calculated by considering the displacement of forces in the X and Y directions from the Z axis shown in Figure 3. Eccentricities were computed such that the product of the Y force and X eccentricity minus the product of the X force and Y eccentricity equaled the Z moment. Load, shear, and moment diagrams are shown in Figure 11 for several wind directions.

5. DISCUSSION

5.1 Flow Visualization

Flow patterns identified with smoke showed that the highest pressures would probably be found near the corners of the tower due to high curvature in separated flow near the corners. In addition, flow down the face of the building was observed to concentrate in the undercuts on the north and northwest wings. This concentrated wind could cause high local pressures around the undercut, induce high velocities in pedestrian areas under the undercuts and result in high pressures on the adjacent church. Because winds from the west and southwest were partially blocked by the large structures of the central downtown area, wind loads associated with winds from westerly winds would be expected to be lower than for winds from other areas.

Winds in pedestrian areas at the base of the tower were largest under the undercuts on the north and northwest wings and at the vortex at the south end of the building.

Winds impinging on the church at the base of the tower were greatly accelerated by the tower. Wind loads on the church should be substantially increased as a result of the presence of the tower.

5.2 Pedestrian Winds

Figure 4 shows the 27 locations selected for investigation of pedestrian wind comfort. Locations 1 and 2 were selected as reference locations which should be reasonably undisturbed by presence of the 1999 Broadway building. Locations 3-8 were coincident with locations 9-14 but were measured without the 1999 Broadway building in place. Locations 9-27 were measured with the tower in place. Table 2 and Figure 8 show that the largest mean velocities were measured at

locations 15, 16, 17 and 20 with values ranging from 67 to 80 percent of the mean velocity, U_∞, at the boundary-layer height. These values compare to a largest mean velocity of 48 to 50 percent at reference locations 1 and 2 and a value of about 45 percent one might expect in an open-country environment. The largest velocities about the base of the building were measured for easterly winds which are among the weaker and least frequent winds in Denver.

The largest values of fluctuating velocity, U_{rms}, were measured at locations 16, 17 and 20 with values ranging from 21 to 27 percent of U_∞. These values are not unusual for a city environment. The largest values of peak gust, represented by the mean plus 3 rms as discussed in Section 4.2, were measured at locations 16, 17 and 21 with values of 125 to 138 percent of U_∞. These values are fairly large, comparing to a value of about 75 to 85 percent in an open-country environment and 91 percent at reference location 1. These peak gusts also occurred for easterly winds which are not prevalent in Denver.

Velocity data of Table 2 integrated with local wind data listed in Table 3 are shown in Figure 9. Based on the data in this figure the windiest locations are predicted to be 16, 17 and 25 which should be uncomfortable for walking 20 to 30 percent of the time for mean winds. Locations 9, 15 and 20 are predicted to be somewhat less windy, exceeding the comfort criteria for walking 10 to 20 percent of the time. These three locations are about the same in windiness as the two reference locations 1 and 2. None of these locations exceeded the level for unacceptable winds.

Winds in front of the existing church at locations 5-8 (11-14) were increased slightly by the presence of the tower but the difference should not be discernable to pedestrians. Winds about the back of the church will be significantly increased.

The results of the pedestrian wind analysis showed that the windiest areas about the building will also be in high pedestrian traffic areas. These winds will be about the same in windiness or slightly windier than the reference locations which were purposely located at corners where winds might be expected to be high. Acceptability of the windier locations about the 1999 Broadway building can be judged rather directly from acceptability at the existing reference locations.

5.3 Pressures

Table 6 shows the largest peak pressure coefficients and corresponding loads measured on the building for each pressure tap location. Data identified as Configuration A in Table 6 and Appendix A represent data obtained at all pressure tap locations on the 1999 Broadway tower and the adjacent church for 36 wind directions. Configuration B represents data obtained at all taps on the church without the tower in place to provide a basis for determining wind load increases or decreases on the church due to the presence of the tower. Configurations C and D represent data obtained at selected pressure taps at 2-degree azimuthal increments near azimuths where large pressure peaks were observed in Configurations A and B, respectively, to ensure that the largest pressure peaks were obtained.

The largest peak pressure coefficients measured on the tower were between -3.1 and -3.2 at tap locations 452, 428 and 309 where flow

visualization indicated the possibility of large peak pressures. These largest coefficients represent, using the 100-year recurrence wind reference pressure of Table 5, peak cladding pressures of 70 psf. Repeat measurements during the 2-degree increment data showed that several tap locations experienced significant increases in pressure. These cases result from a natural variation caused by a statistical distribution of peaks with a large dispersion. The likelihood of achieving these larger values during a given design windstorm is small. Figure 10 shows that most areas of the tower had peak negative (outward-acting) pressures in the 20 to 40 psf range. Peak positive pressures ranged up to about 30 psf.

Peak cladding loads on the church can best be evaluated by examination of peak pressure contour plots in Figure 10. For Configuration B, without the tower in place, local peak pressures were in the ±10 to 20 psf range with a largest measured value of -23 psf. For Configuration A with the tower in place, peak local pressures were mostly in the ±15 to 30 psf range with a largest measured value of -44 psf. Thus the presence of the tower caused significantly higher loads on the church even though the loads with the tower in place were not exceptionally large.

Figure 11 shows load, shear and moment distributions plotted from Table 7 for the largest loads in the X and Y coordinate directions for the tower and for the church with and without the tower in place. For the tower, the maximum shears in the X and Y directions occurred for wind directions where the load in the other coordinate direction was reasonably small. However, Table 7 shows that the torsional moment was rather large for some wind directions, particularly where Y shears were large. Forces and moments on the church, while not large with the tower in place, were significantly larger than those without the tower in place.

REFERENCES

1. Cermak, J. E., "Laboratory Simulation of the Atmospheric Boundary Layer," AIAA Jl., Vol. 9, September 1971.

2. Cermak, J. E., "Applications of Fluid Mechanics to Wind Engineering," A Freeman Scholar Lecture, ASME Jl. of Fluids Engineering, Vol. 97, No. 1, March 1975.

3. Cermak, J. E., "Aerodynamics of Buildings," Annual Review of Fluid Mechanics, Vol. 8, 1976, pp. 75-106.

4. Penwarden, A. D., and Wise, A. F. E., "Wind Environment Around Buildings," Building Research Establishment Report, HMSO, 1975.

5. Melbourne, W. H., "Criteria for Environmental Wind Conditions," Jl. Industrial Aerodynamics, Vol. 3, pp. 241-247, 1978.

6. American National Standards Institute, "American National Standard Building Code Requirements for Minimum Design Loads in Buildings and Other Structures," ANSI Standard A58.1, 1972, or the revised ANSI Standard A58.1 to be published.

7. Hollister, S. C., "The Engineering Interpretation of Weather Bureau Records for Wind Loading on Structures," Building Science Series 30--Wind Loads on Buildings and Structures, National Bureau of Standards, pp. 151-164, 1970.

8. Peterka, J. A., and Cermak, J. E., "Peak-Pressure Duration in Separated Regions on a Structure," U.S.-Japan Research Seminar on Wind Effects on Structures, Kyoto, Japan, 9-13 September 1974; Report CEP74-75JAP-JEC8, Fluid Mechanics Program, Colorado State University, September 1974.

9. PPG Glass Thickness Recommendations to Meet Architects' Specified 1-Minute Wind Load, Pittsburgh Plate Glass Industries, April 1979.

10. Shand, E. B., "Glass Engineering Handbook," Second Edition, McGraw-Hill, New York, p. 51, 1958.

FIGURES

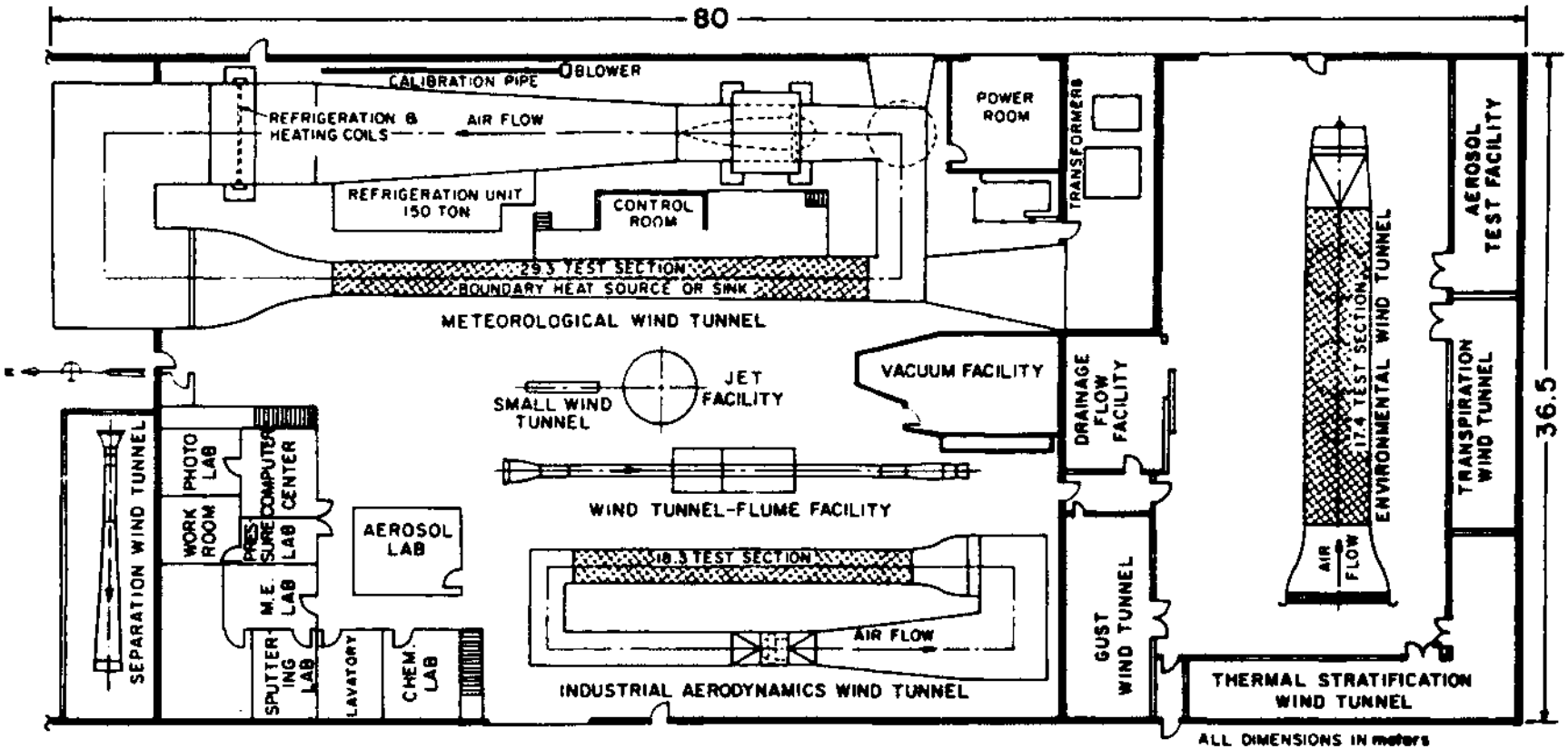

Figure 1. **FLUID DYNAMICS AND DIFFUSION LABORATORY COLORADO STATE UNIVERSITY**

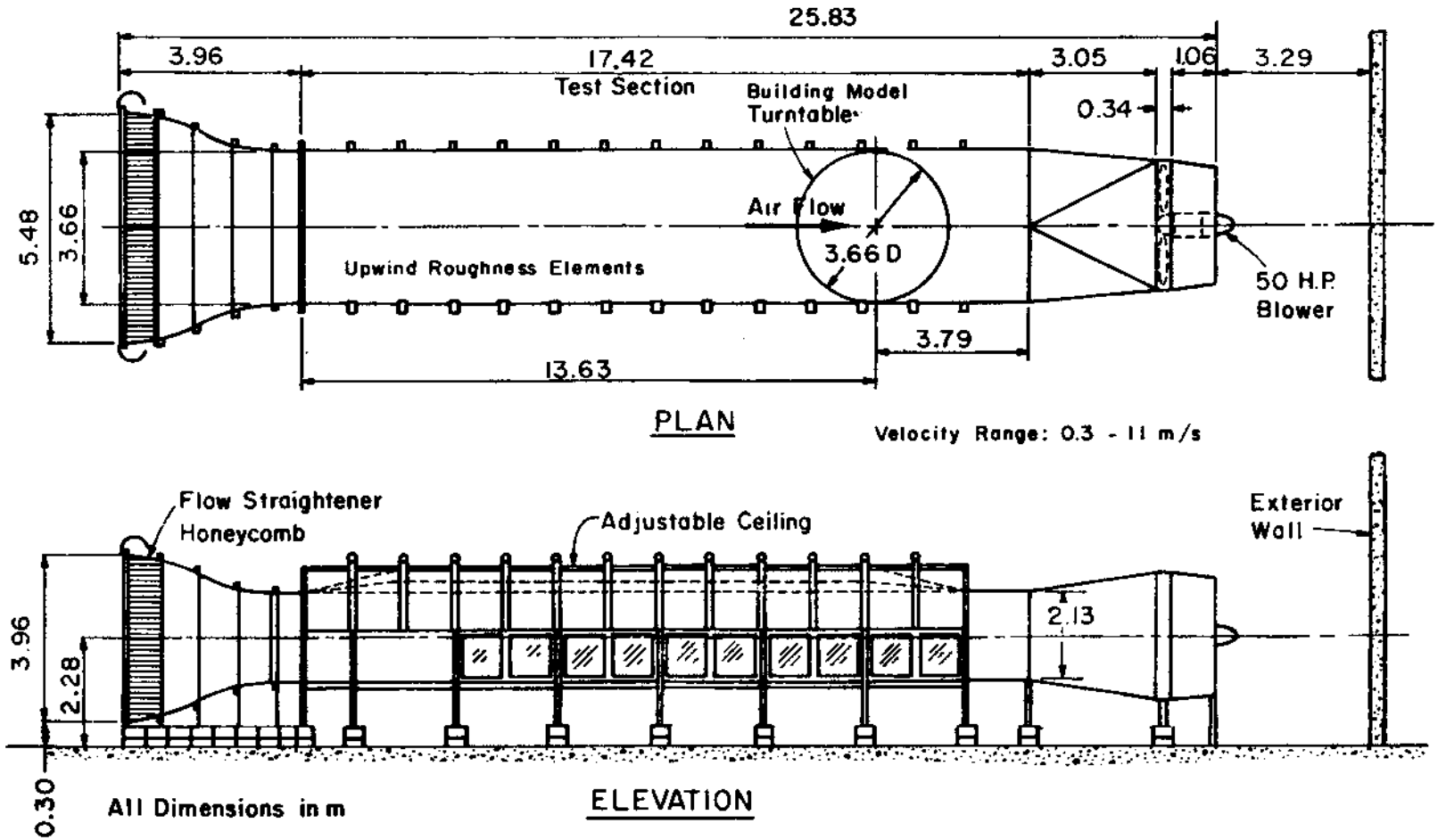

ENVIRONMENTAL WIND TUNNEL

Figure 2. Wind-Tunnel Configuration

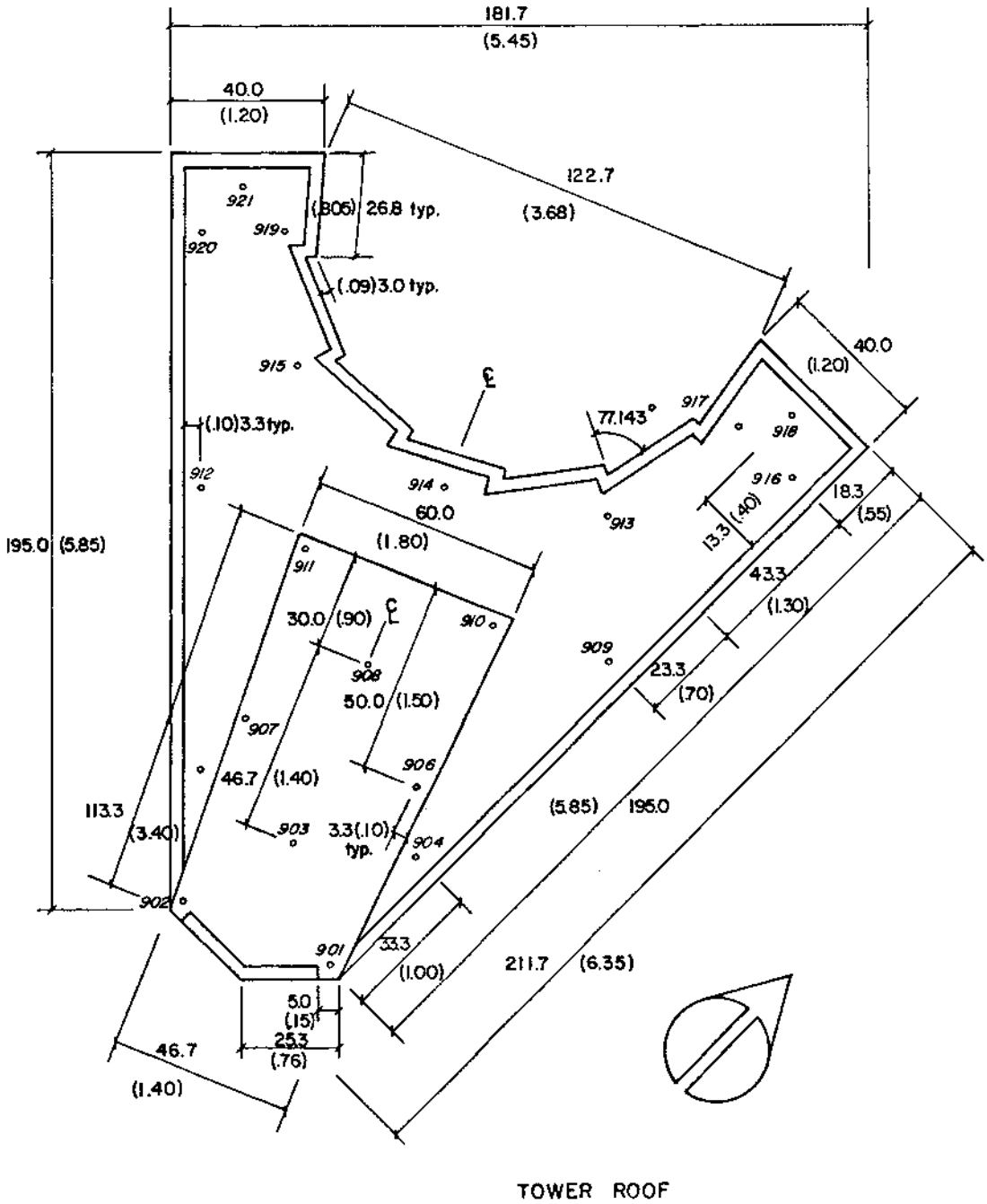

TOWER ROOF

Figure 3a. Pressure Tap Locations

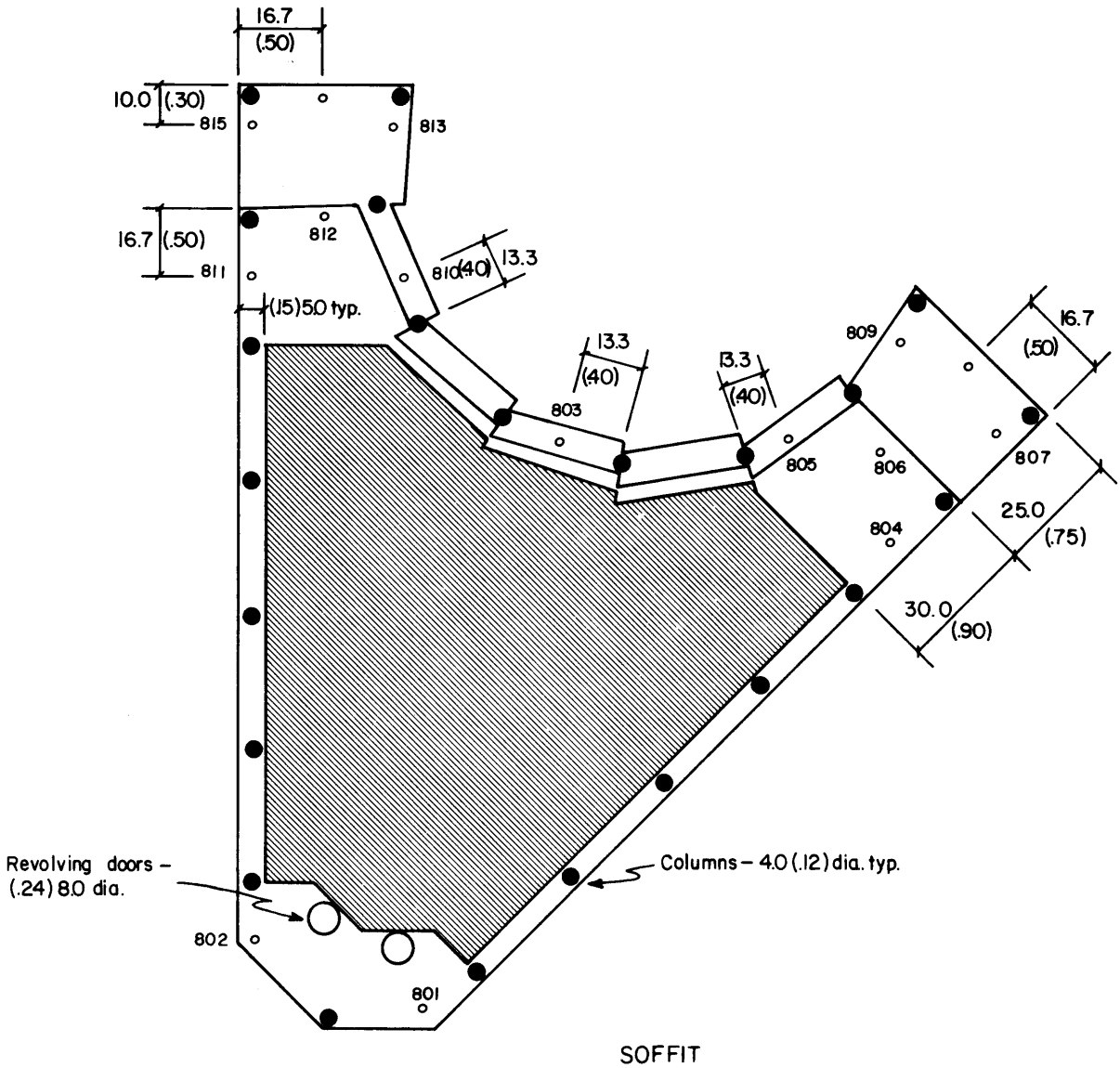

Figure 3b. Pressure Tap Locations

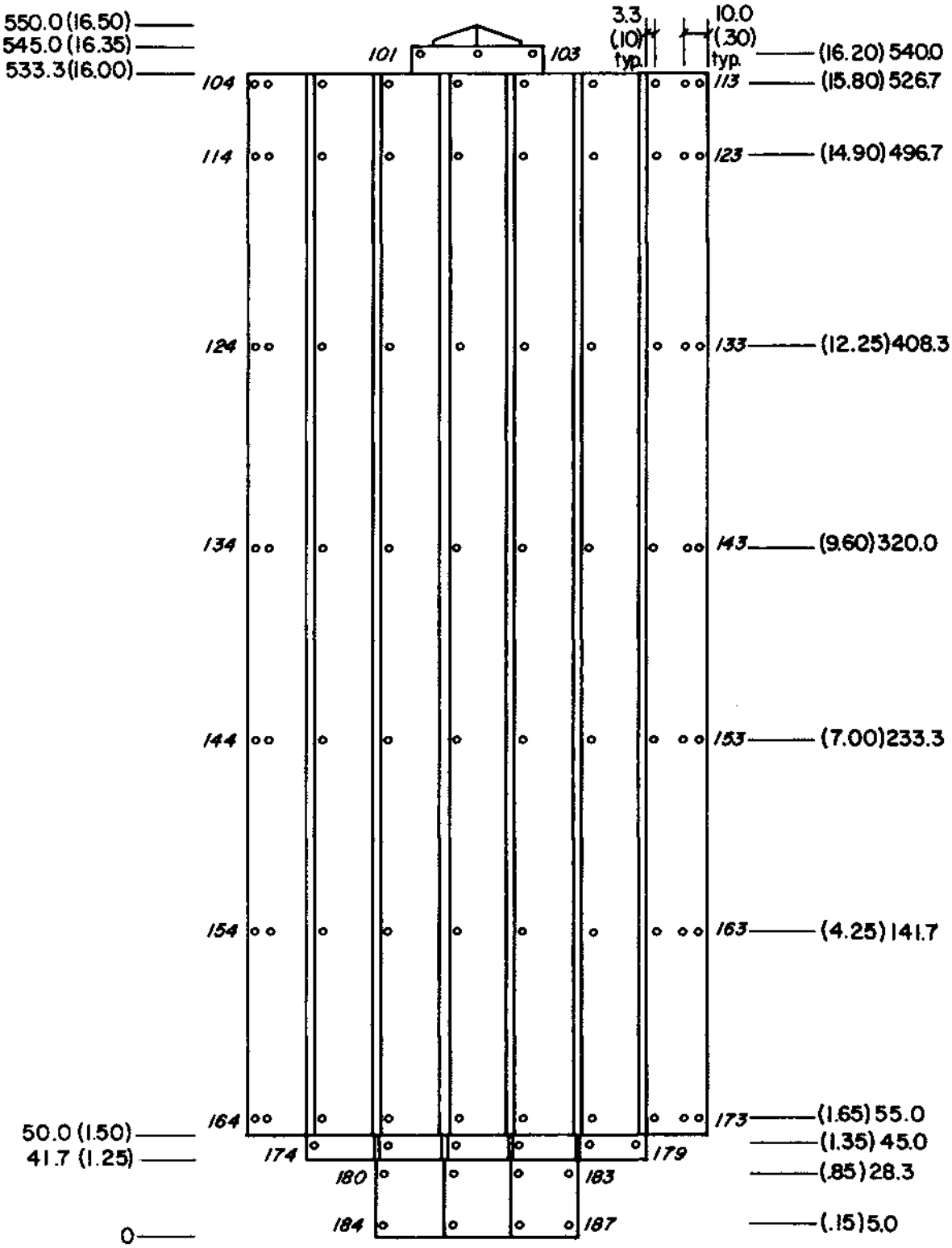

Development of North - Northwest Elevation

Figure 3c. Pressure Tap Locations

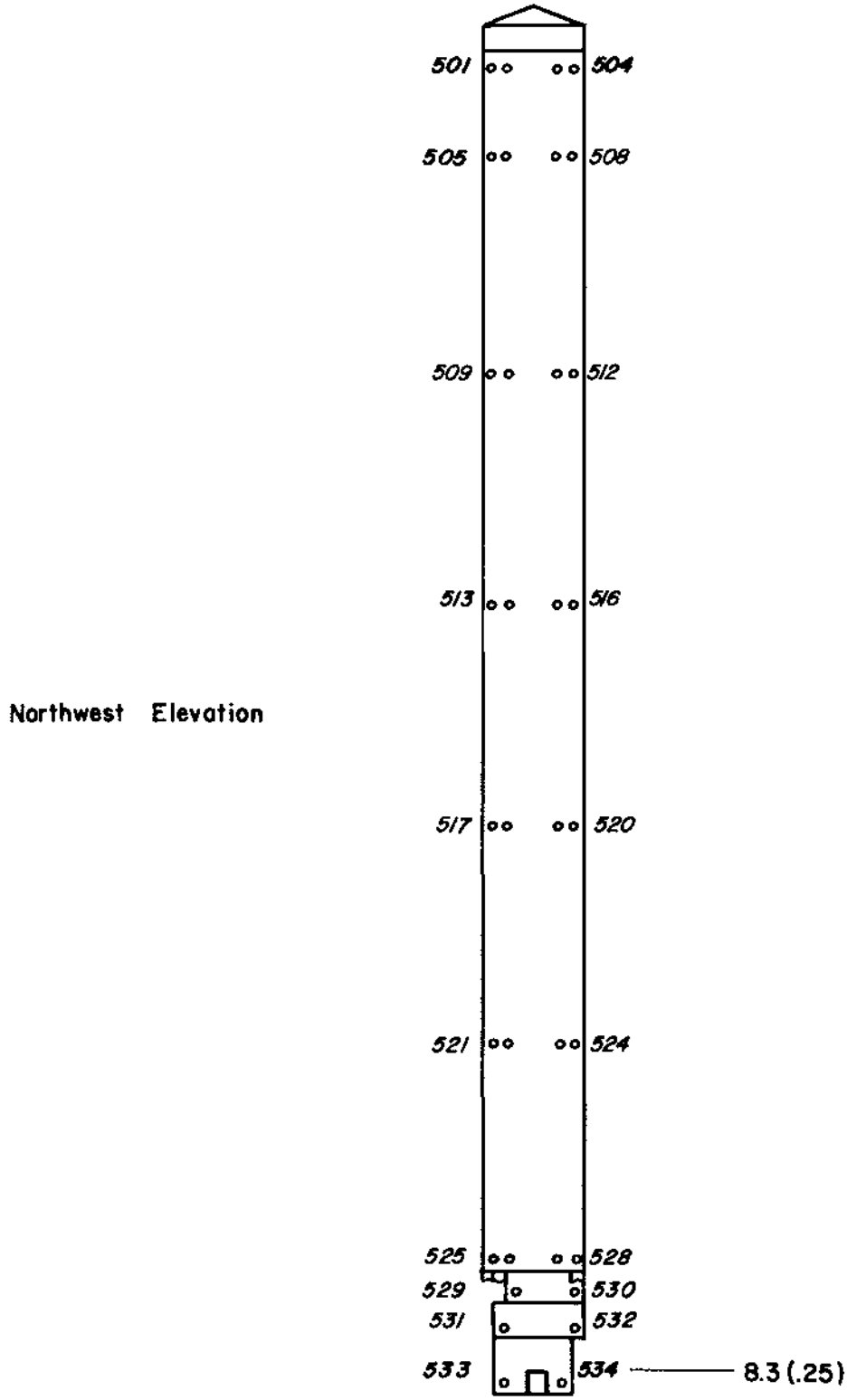

Figure 3d. Pressure Tap Locations

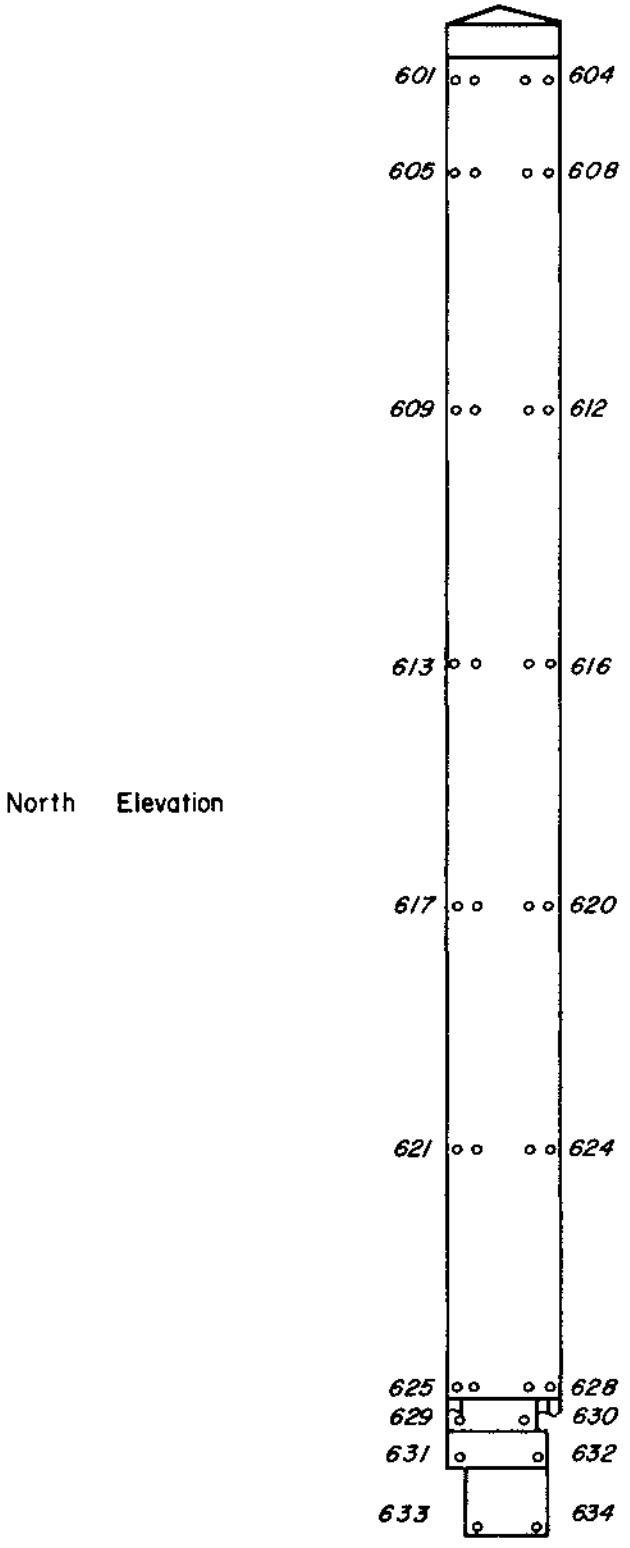

Figure 3e. Pressure Tap Locations

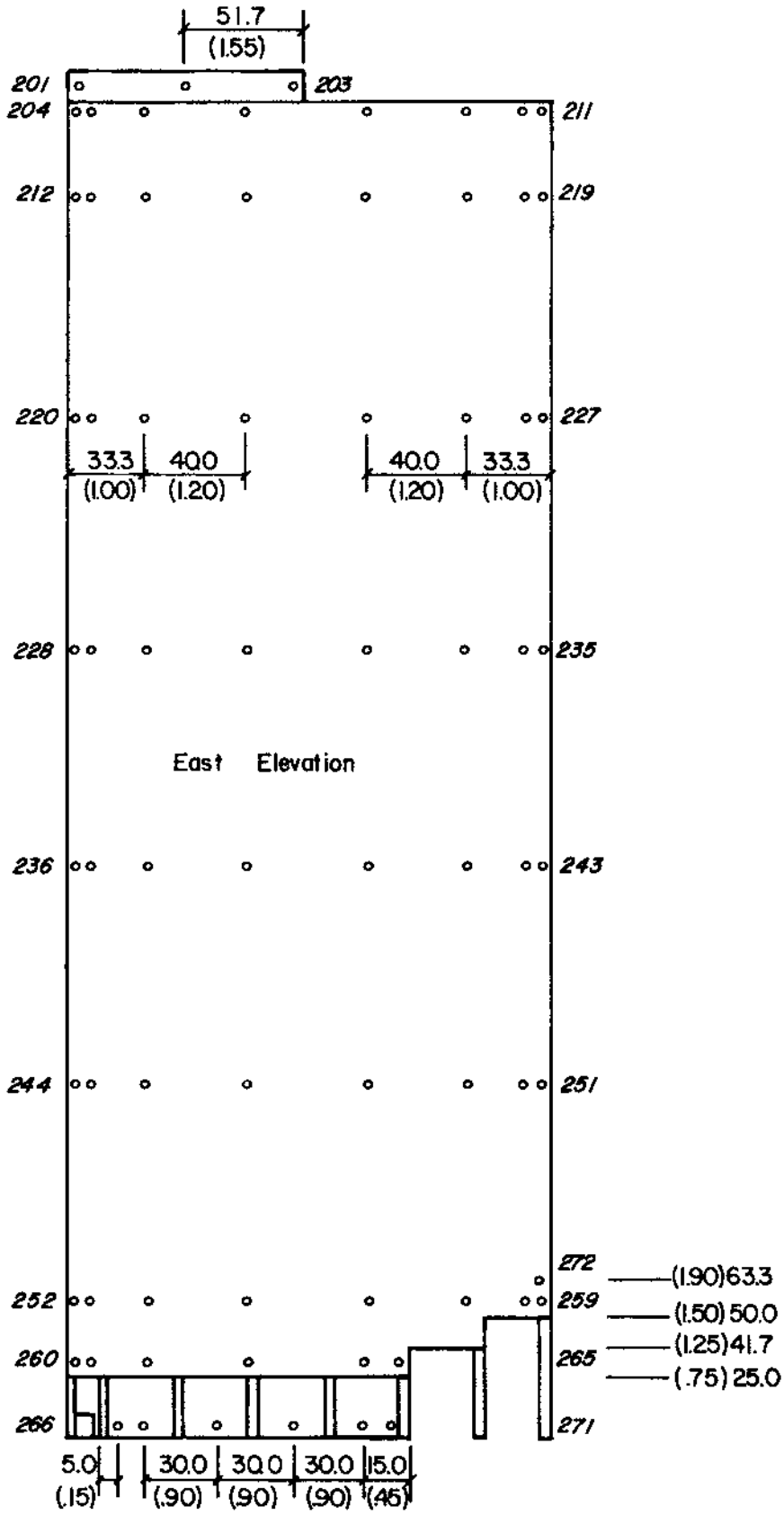

Figure 3f. Pressure Tap Locations

South – Southeast Elevation

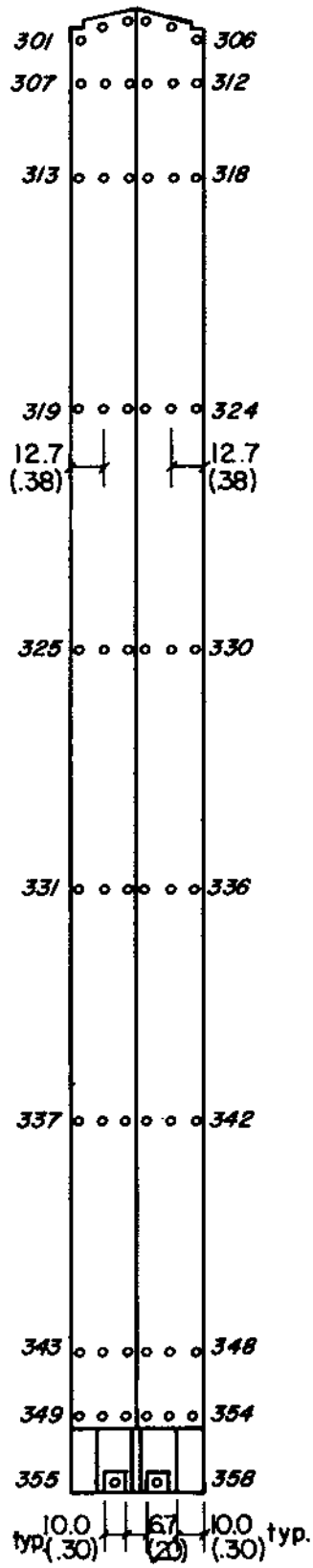

Figure 3g. Pressure Tap Locations

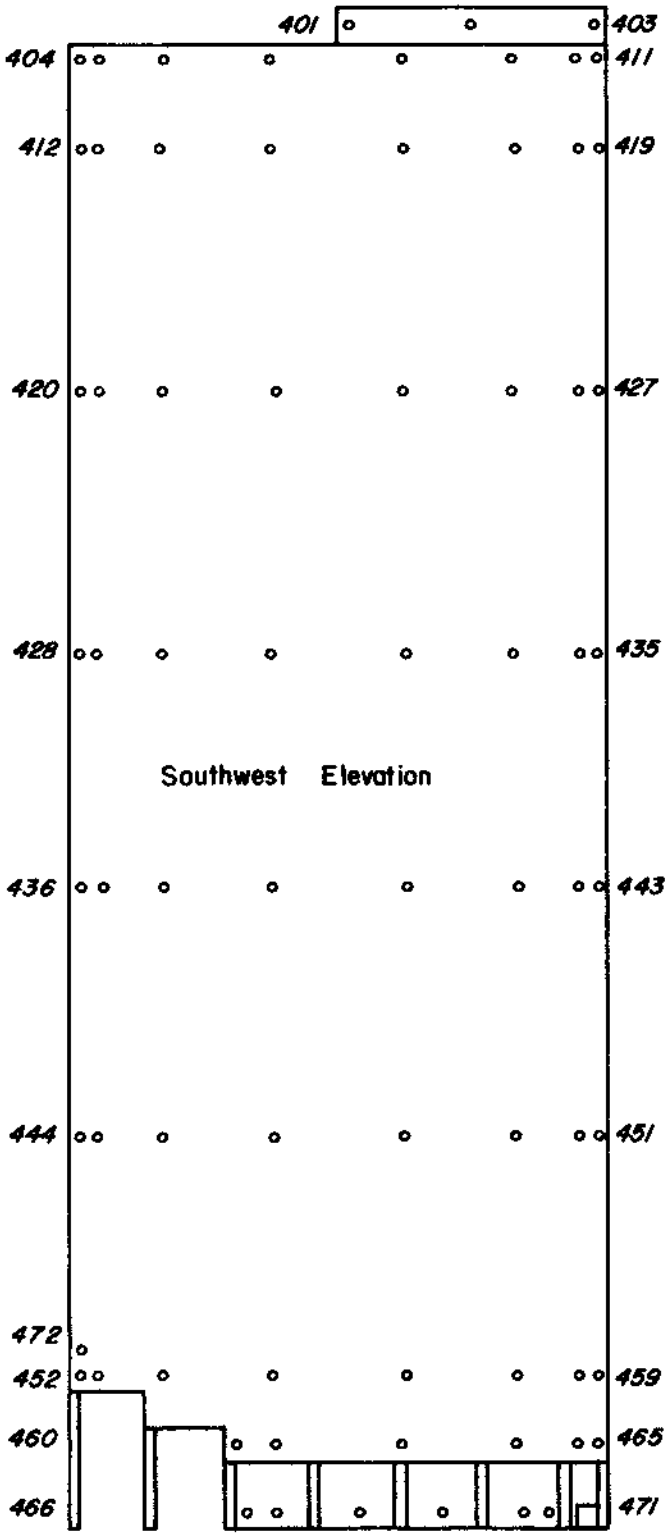

Figure 3h. Pressure Tap Locations

Note:
All tap[illegible]re located (10) 3.3 from nearest edge or on the center line of that section of roof unless otherwise noted.

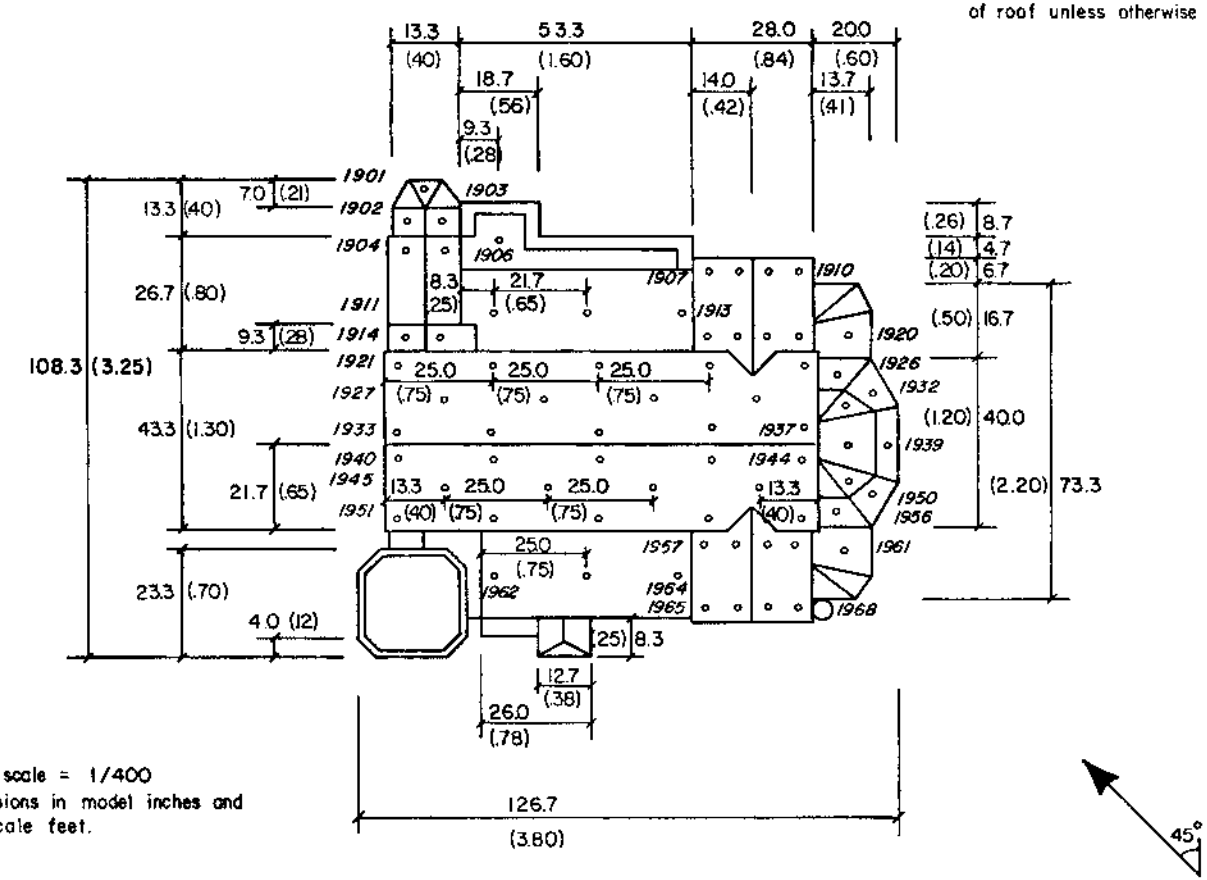

Model scale = 1/400
Dimensions in model inches and full scale feet.

Figure 3i. Pressure Tap Locations

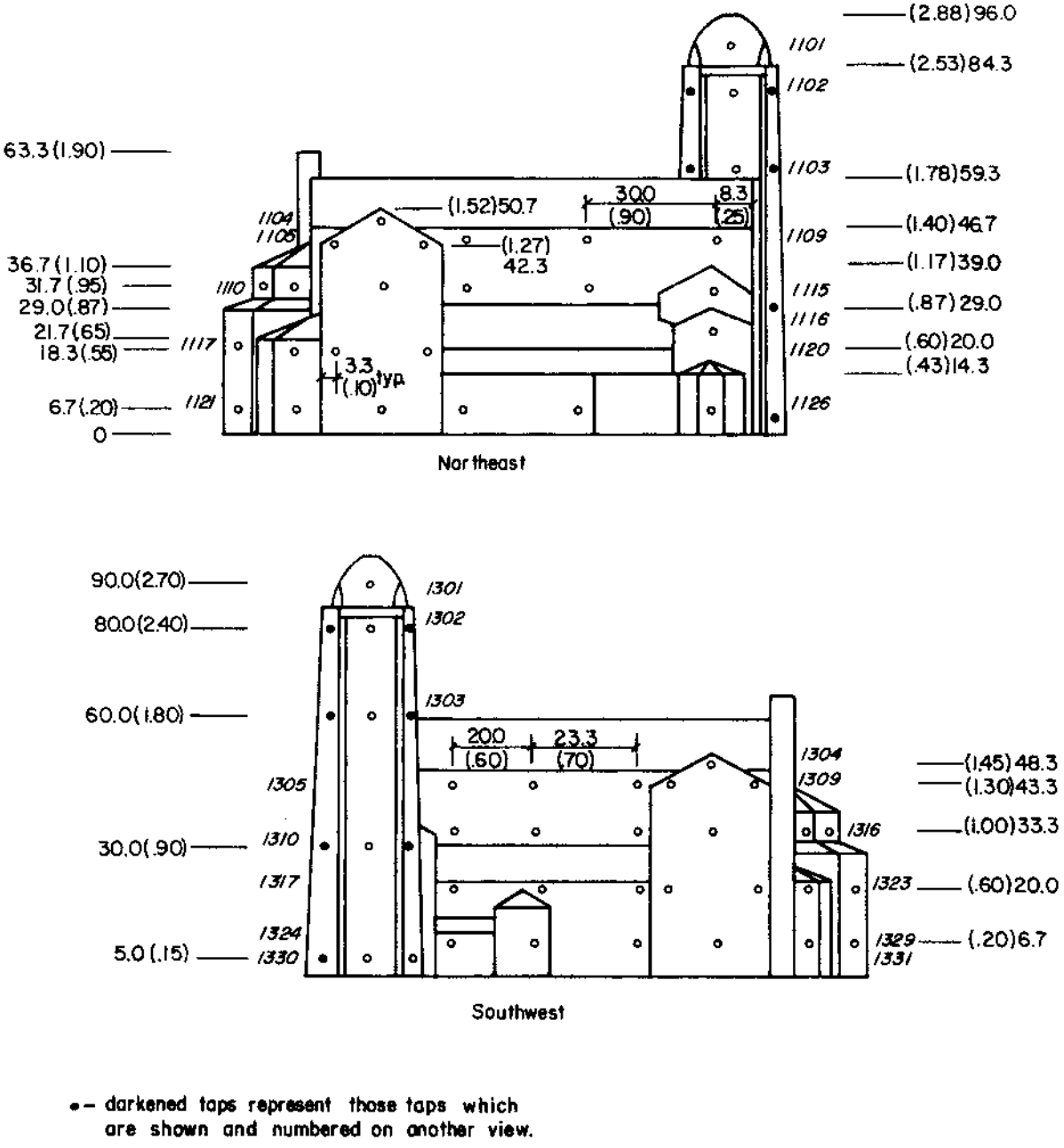

• – darkened taps represent those taps which are shown and numbered on another view.

Figure 3j. Pressure Tap Locations

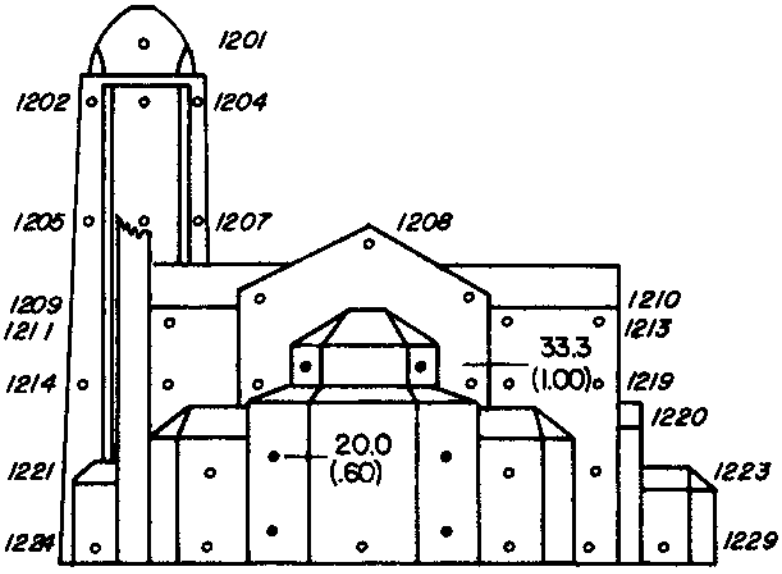

Southeast

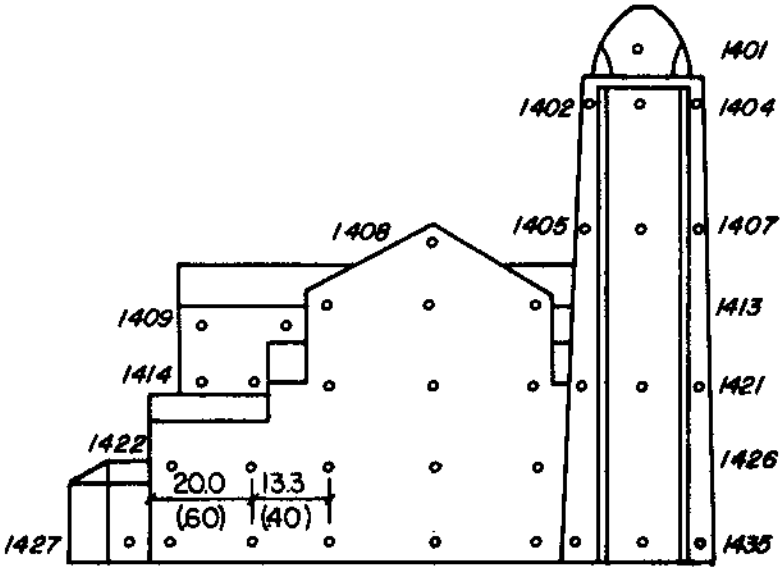

Northwest

Figure 3k. Pressure Tap Locations

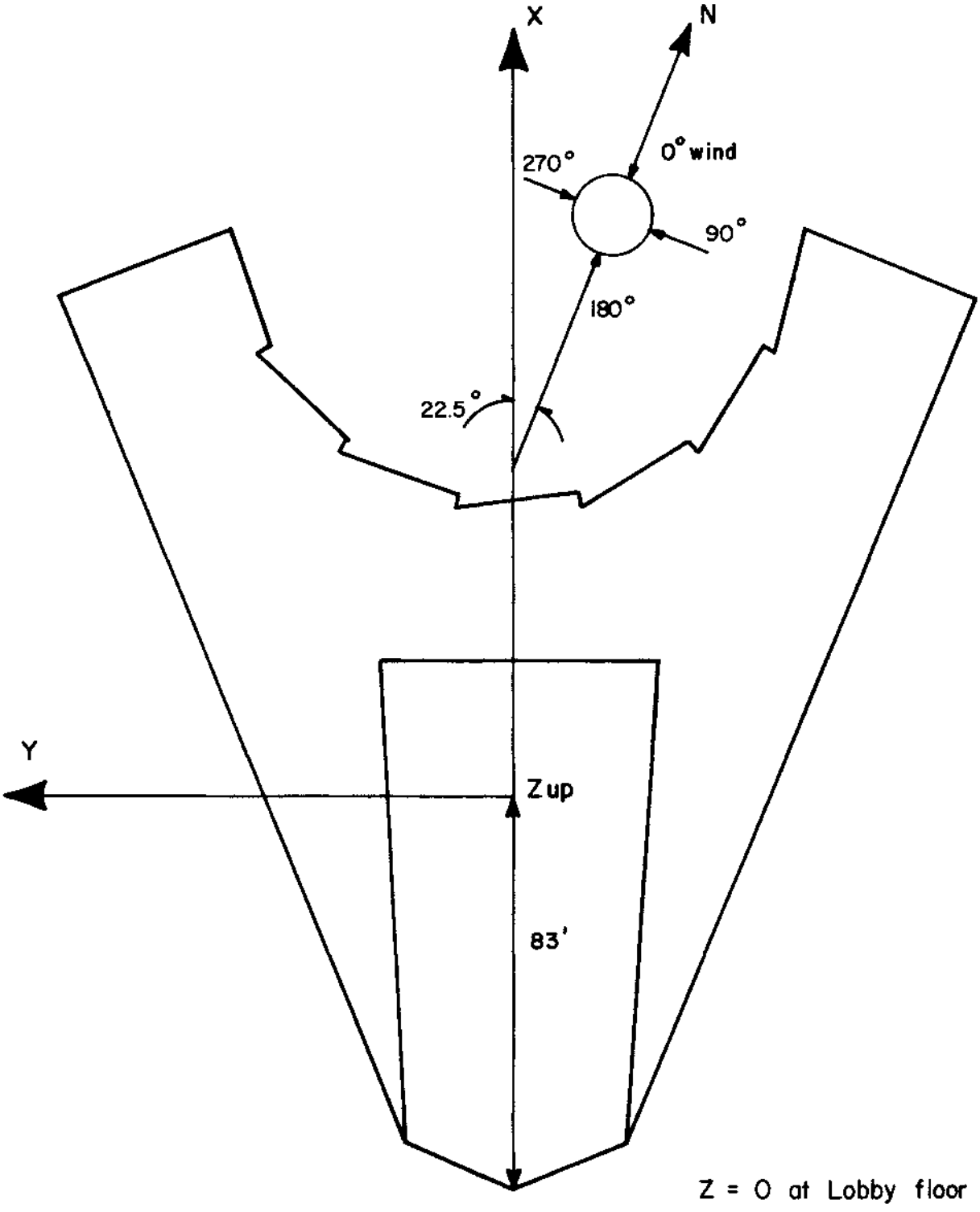

Figure 31. Force and Moment Coordinate System

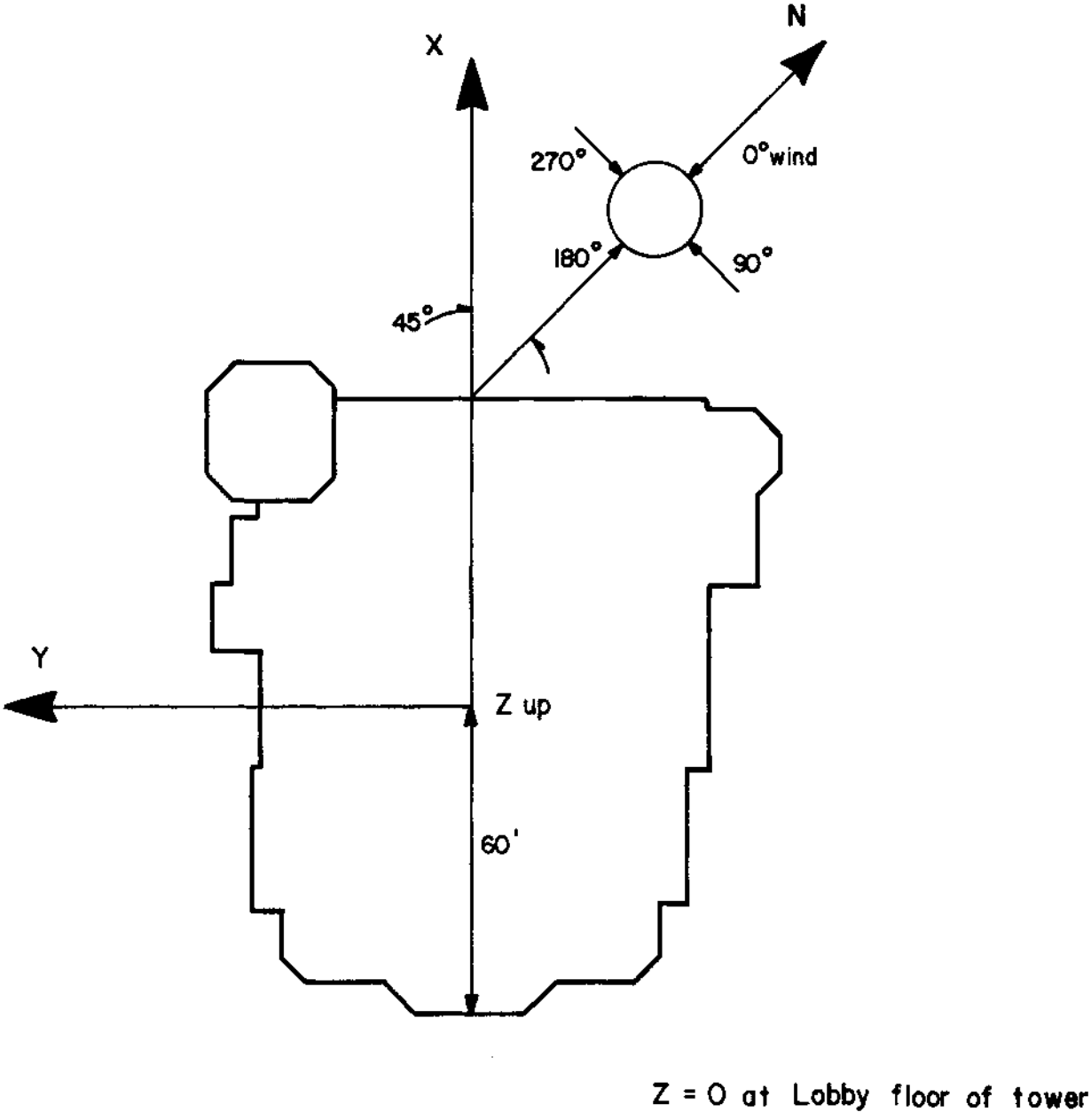

Figure 3m. Force and Moment Coordinate System

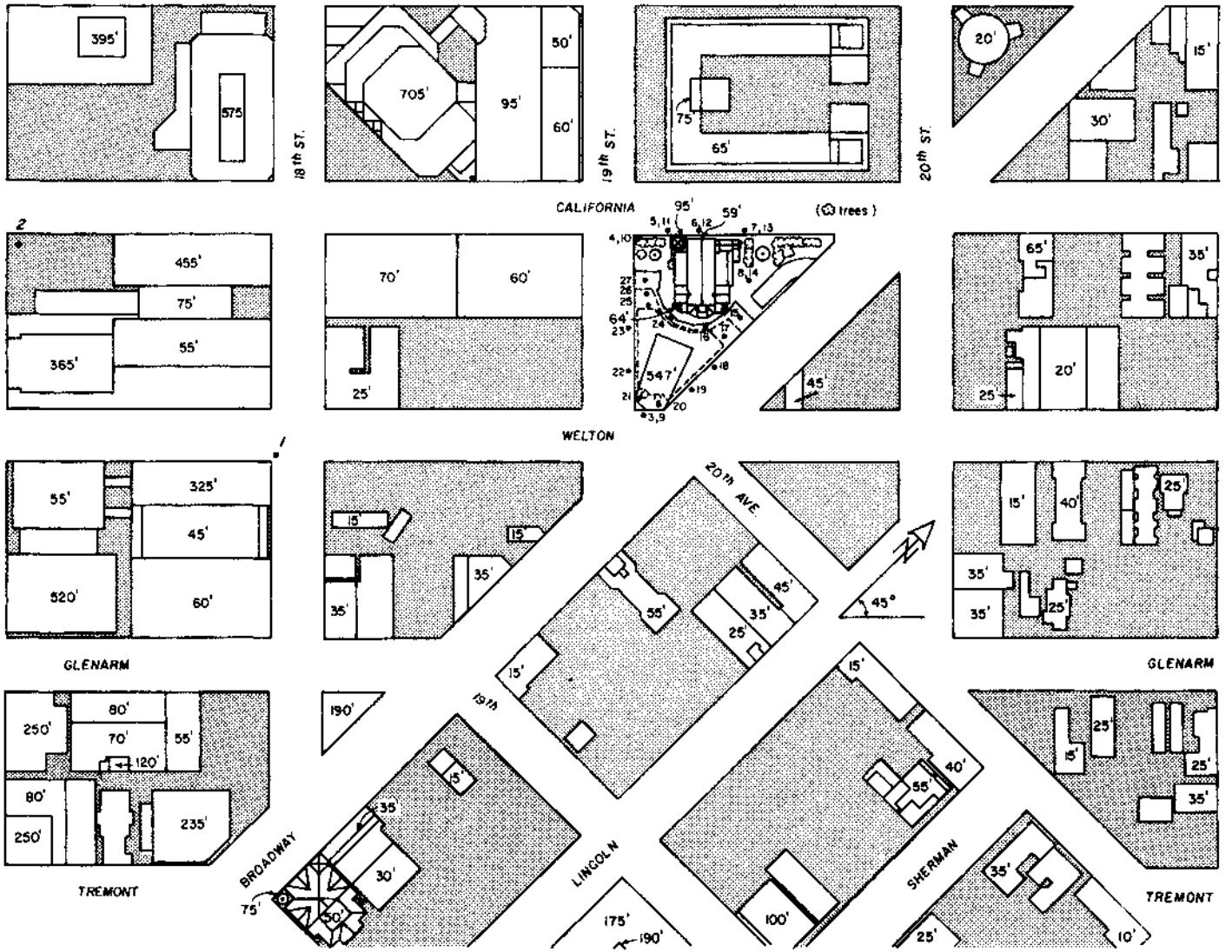

Figure 4. Building Location and Pedestrian Wind Velocity Measuring Positions

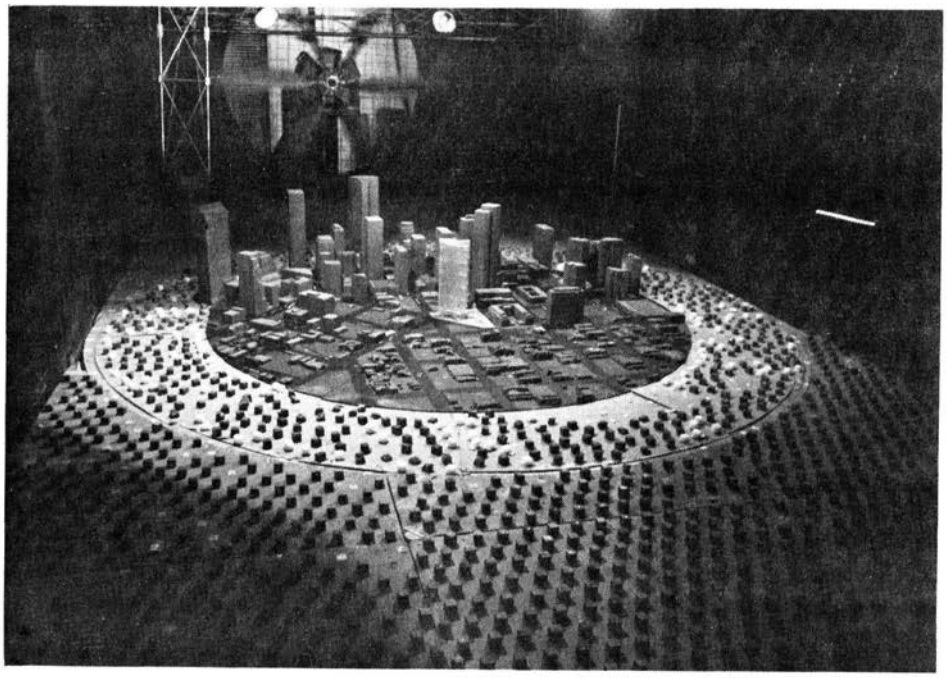

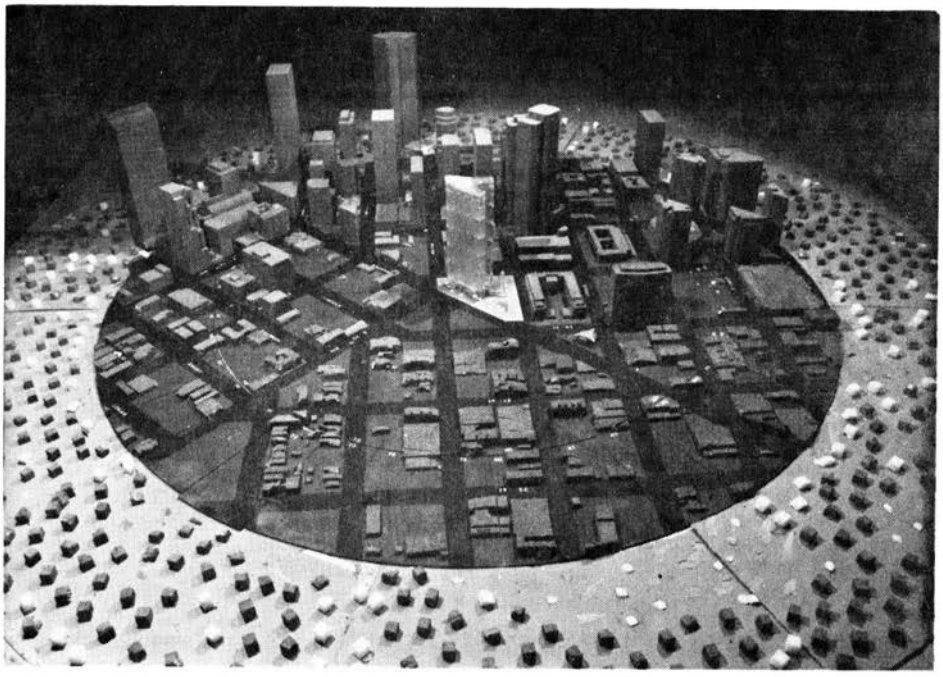

Figure 5. Completed Model in Wind Tunnel

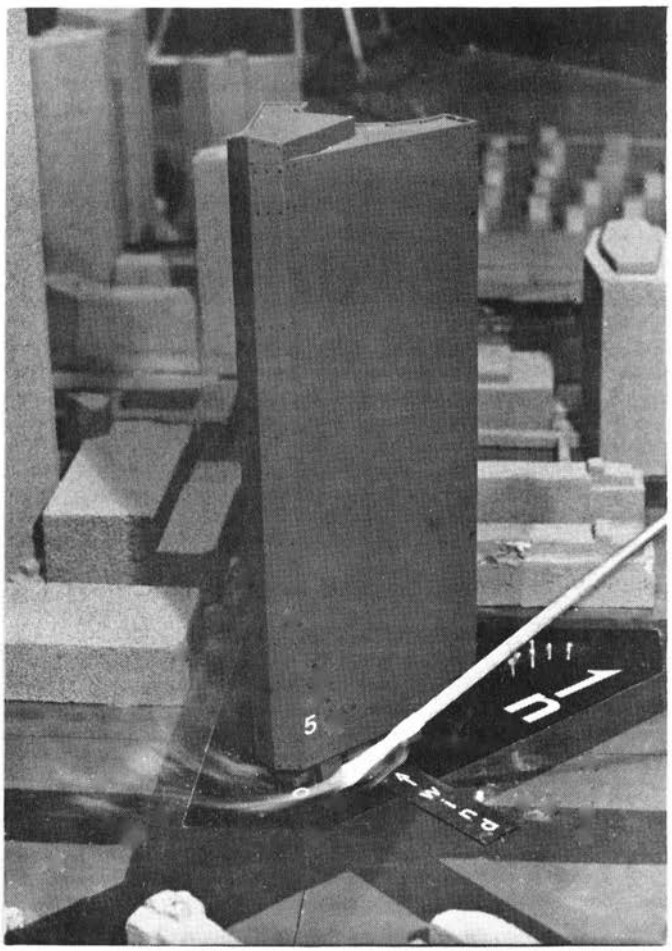

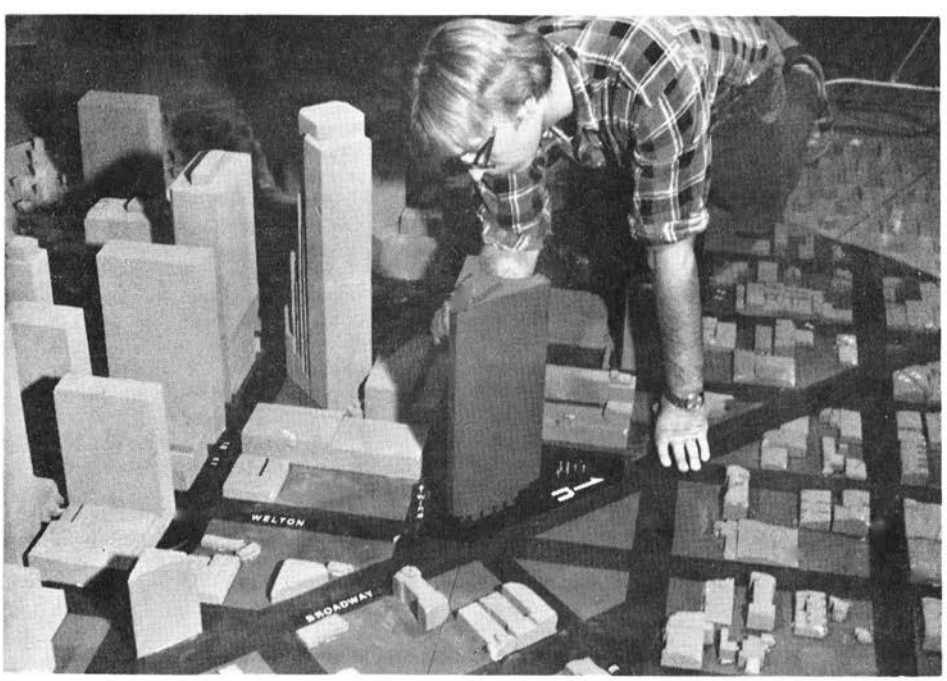

Figure 5. Completed Model in Wind Tunnel

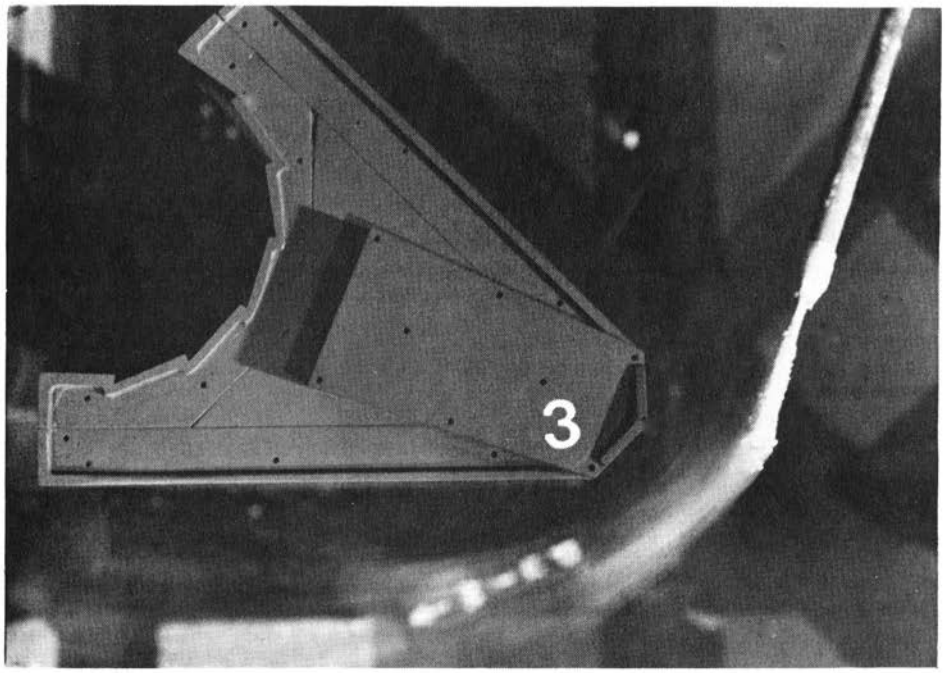

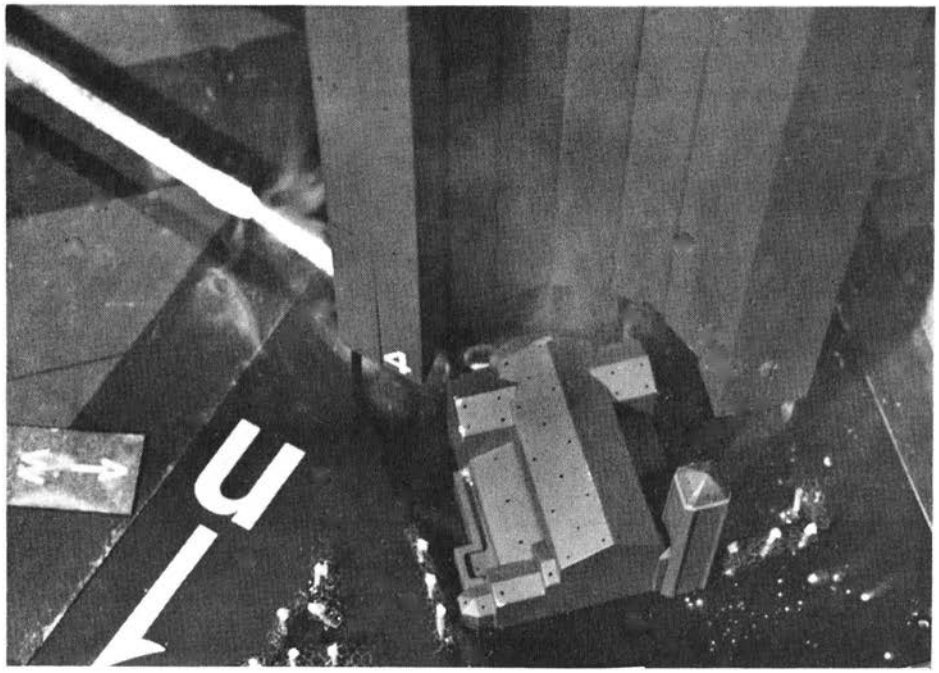

Figure 5. Completed Model in Wind Tunnel

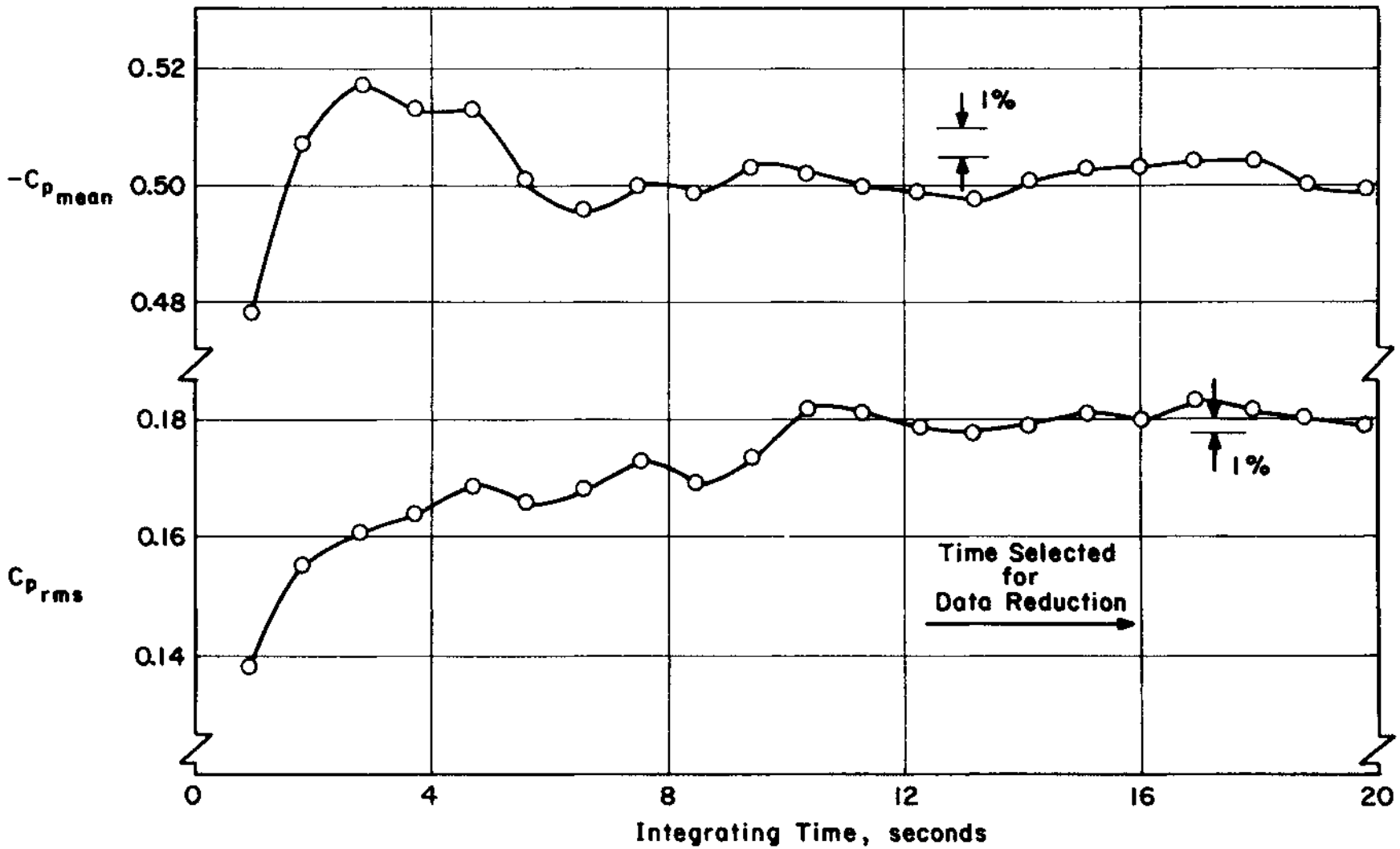

Figure 6. Data Sampling Time Verification

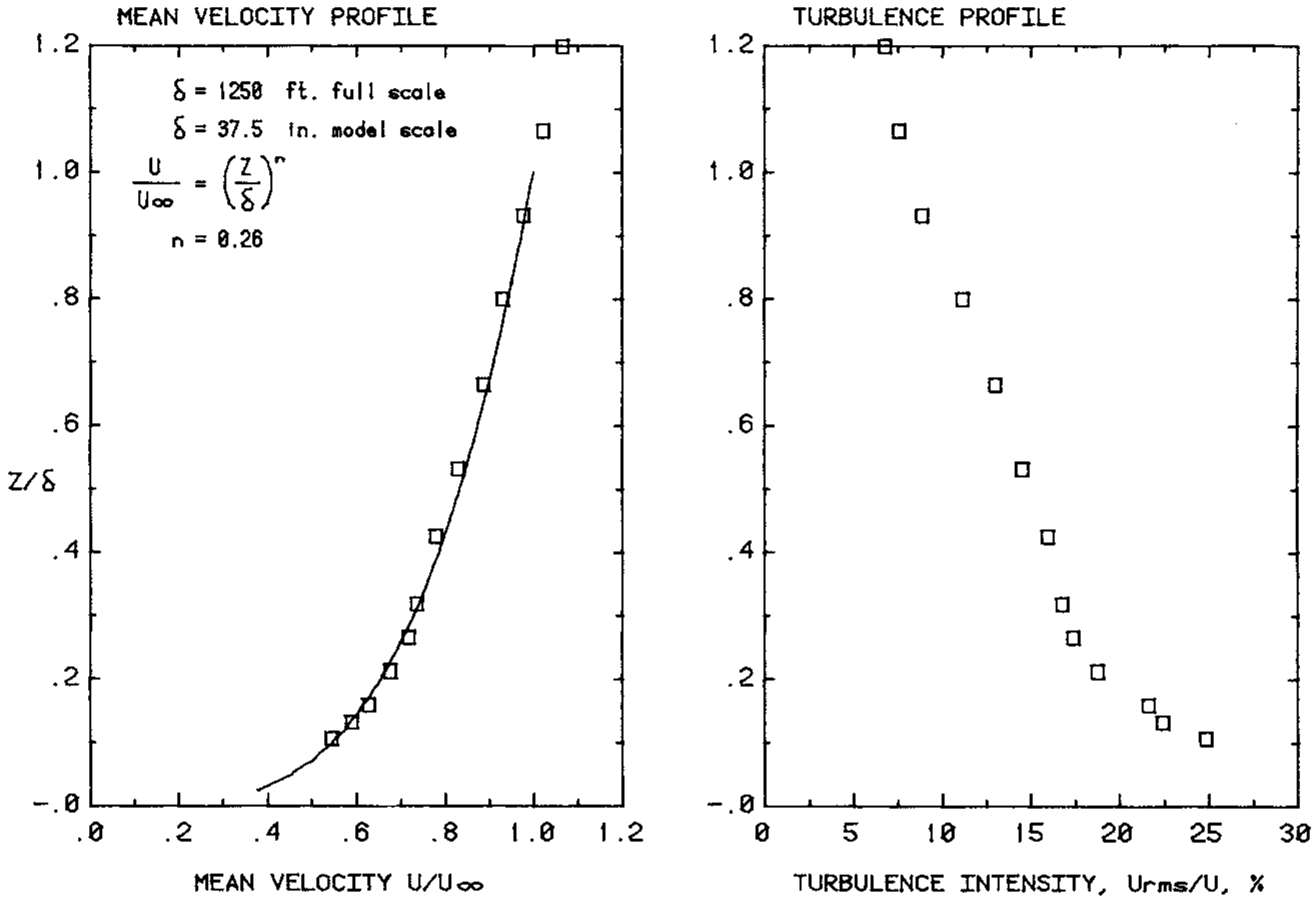

Figure 7. Mean Velocity and Turbulence Profiles Approaching the Model

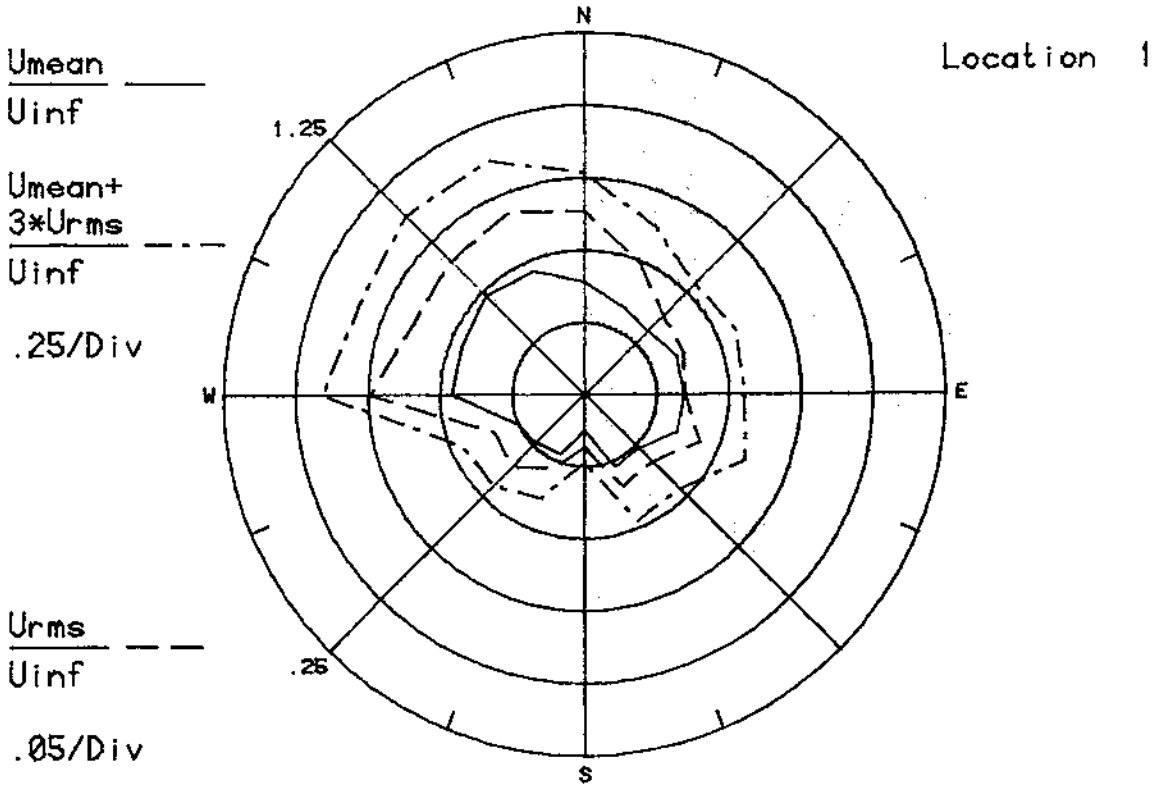

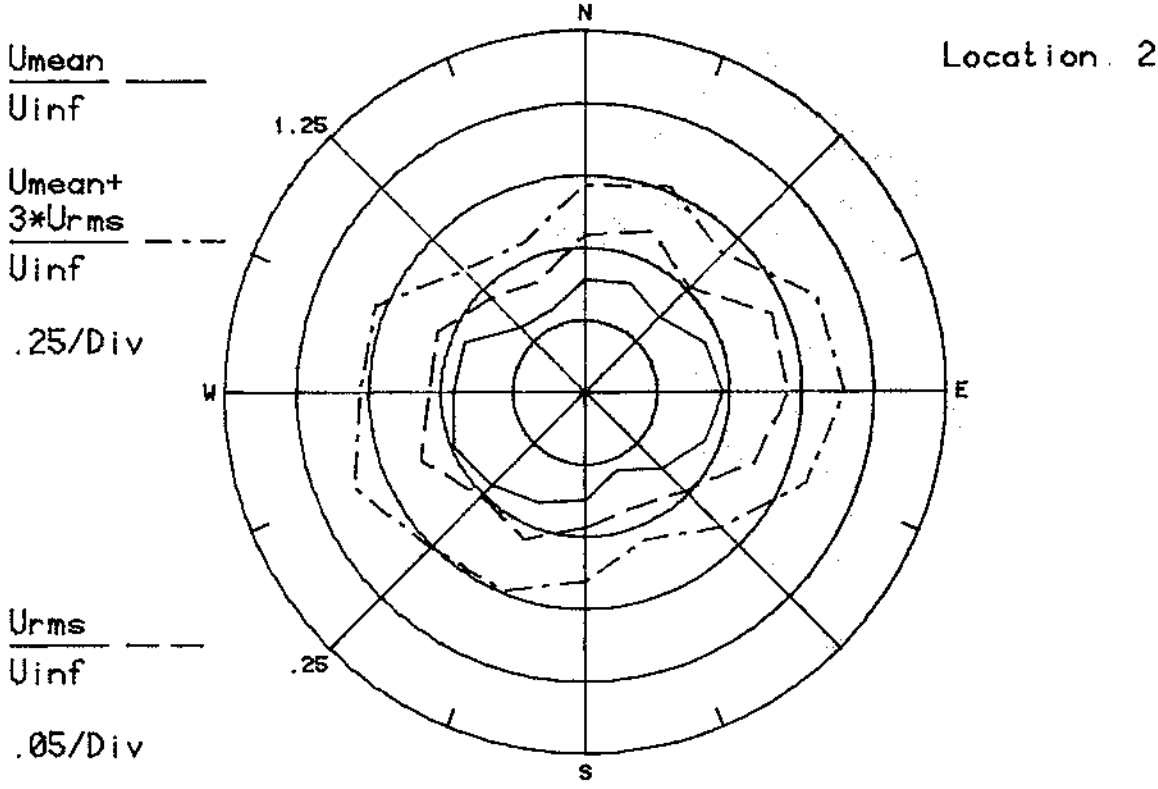

Figure 8a. Mean Velocities and Turbulence Intensities at Pedestrian Locations 1 and 2

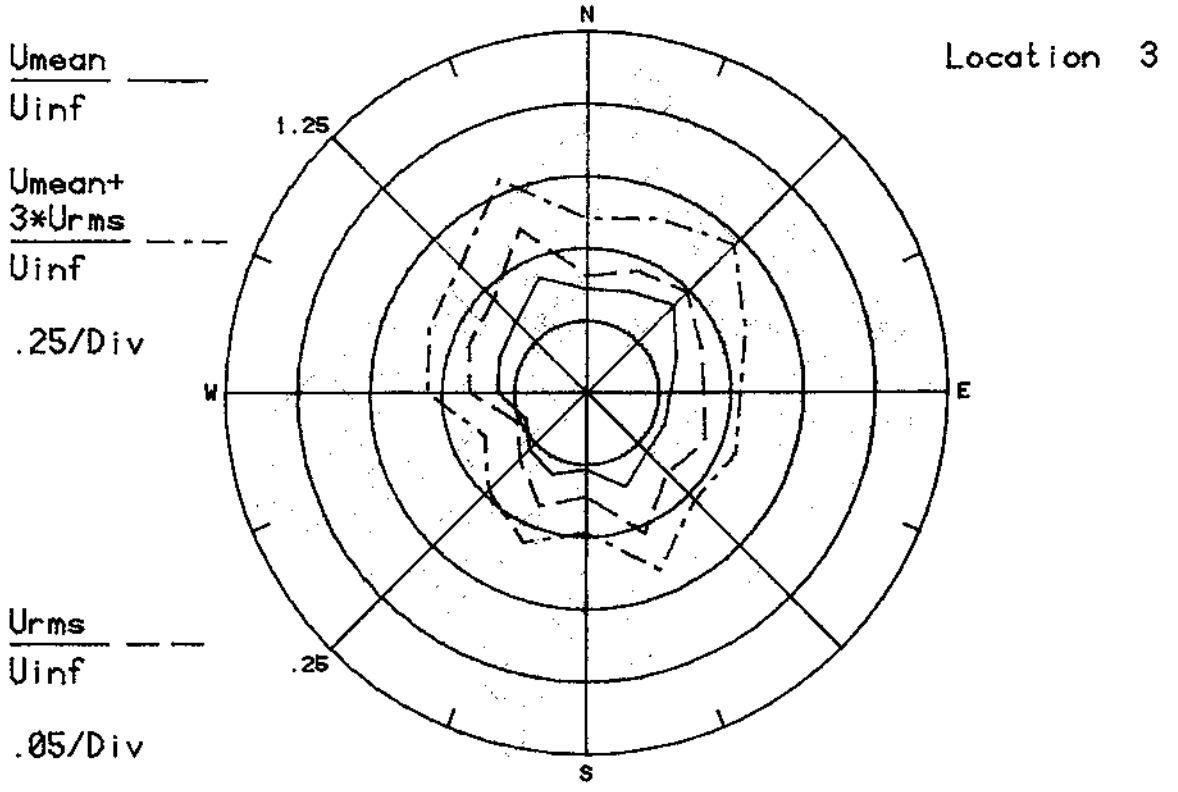

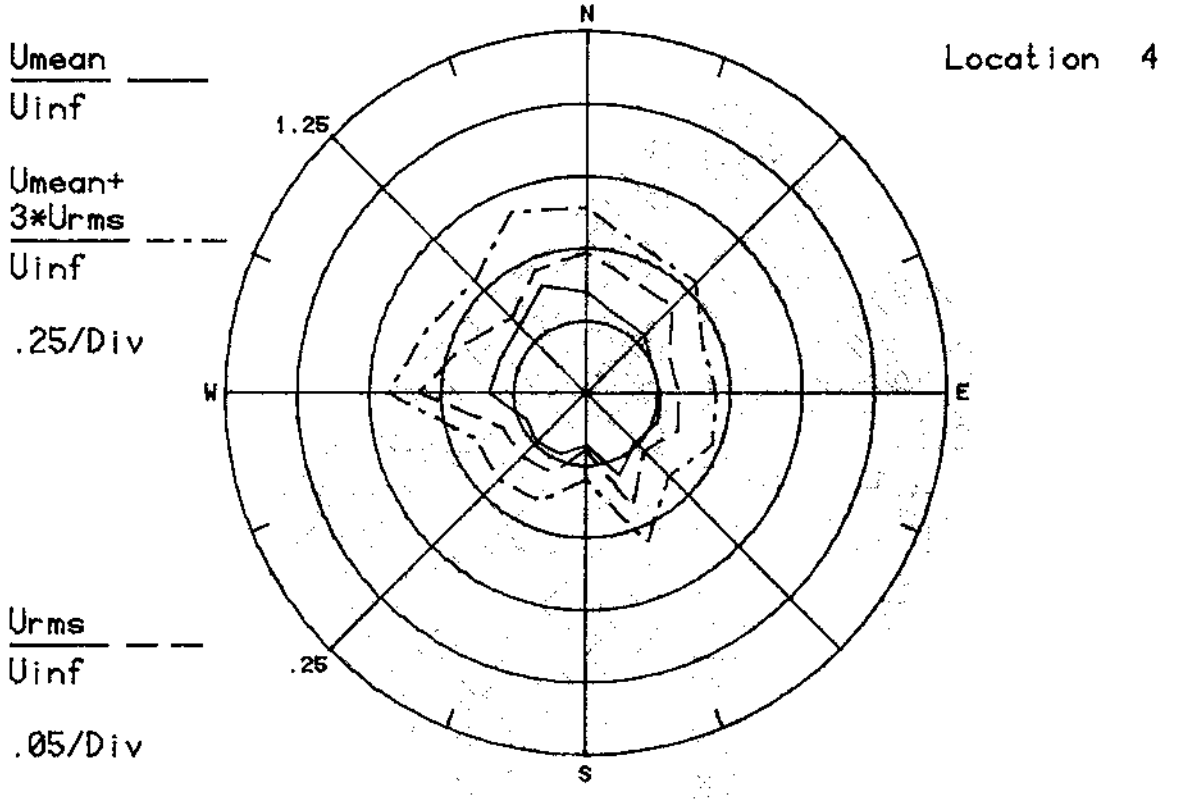

Figure 8b. Mean Velocities and Turbulence Intensities at Pedestrian Locations 3 and 4

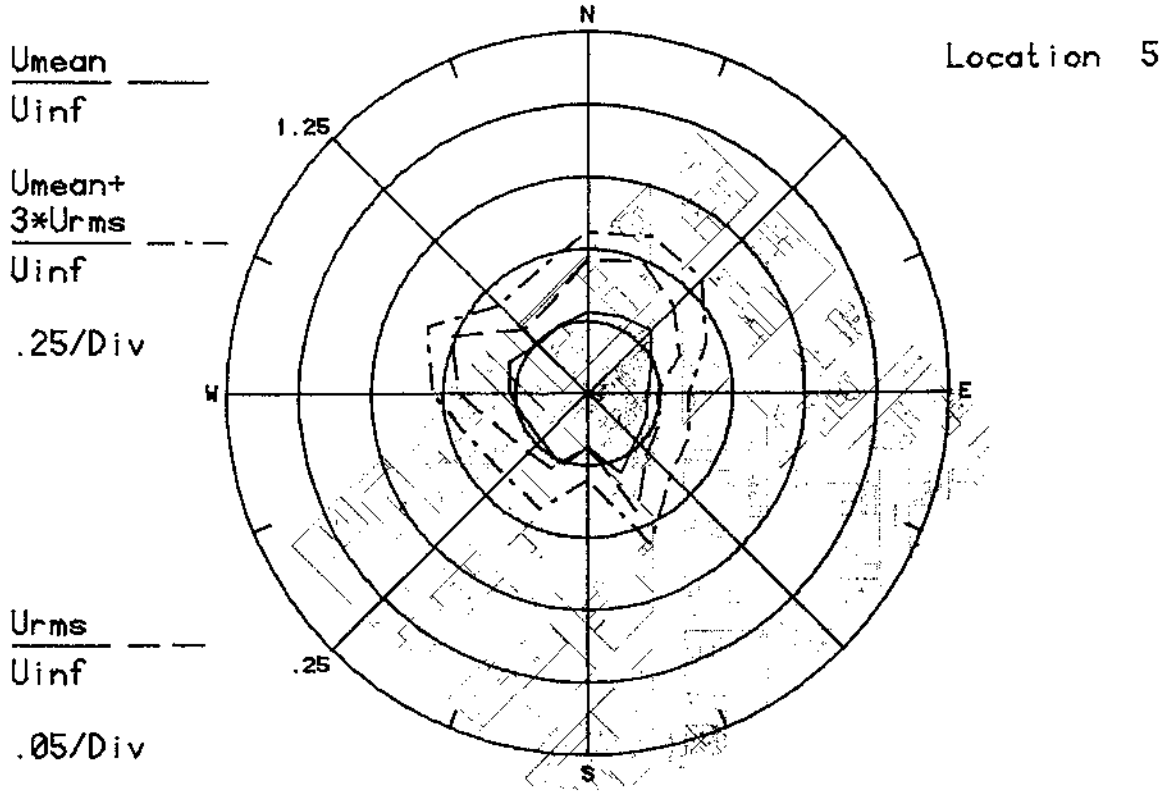

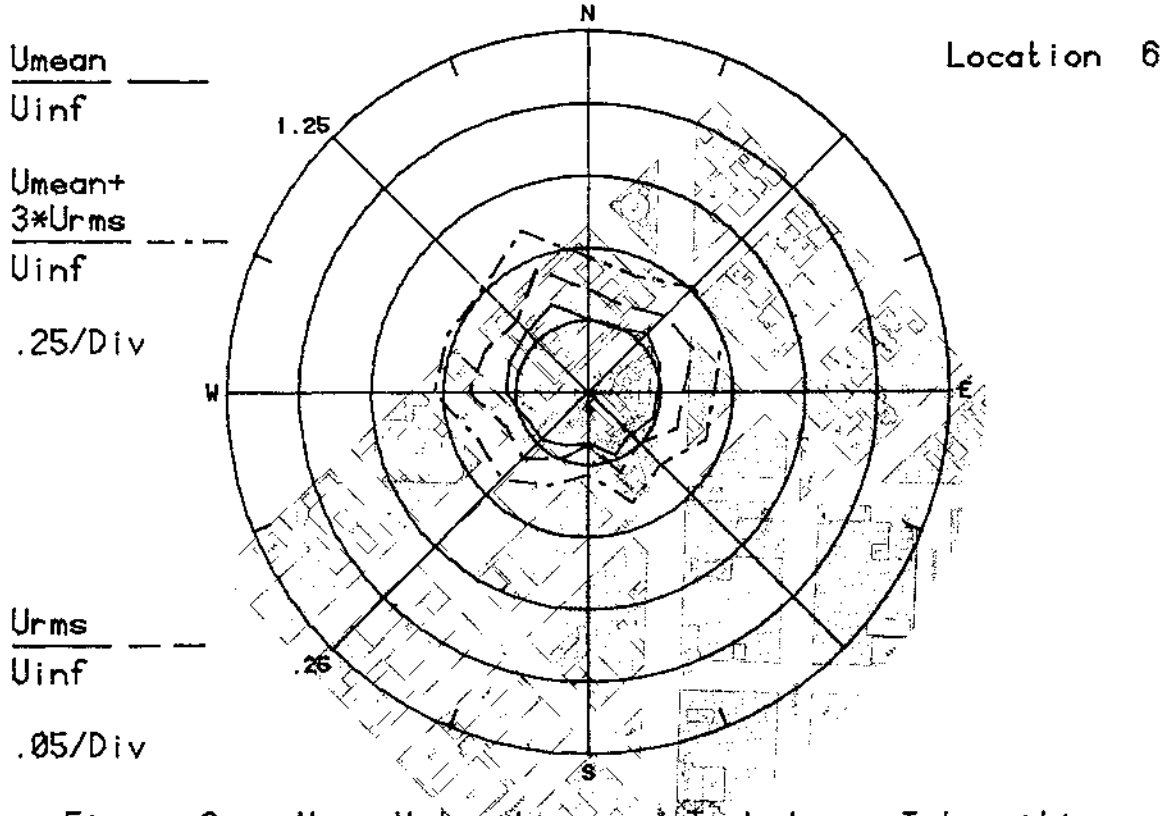

Figure 8c. Mean Velocities and Turbulence Intensities at Pedestrian Locations 5 and 6

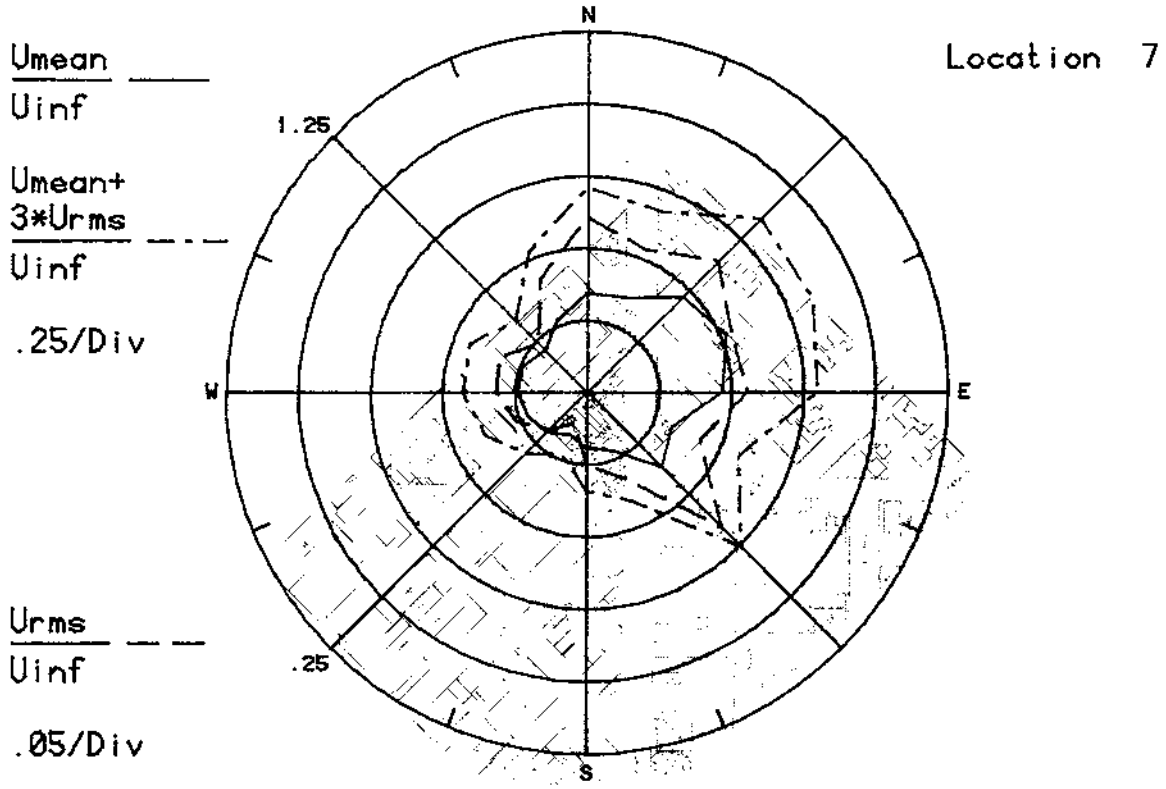

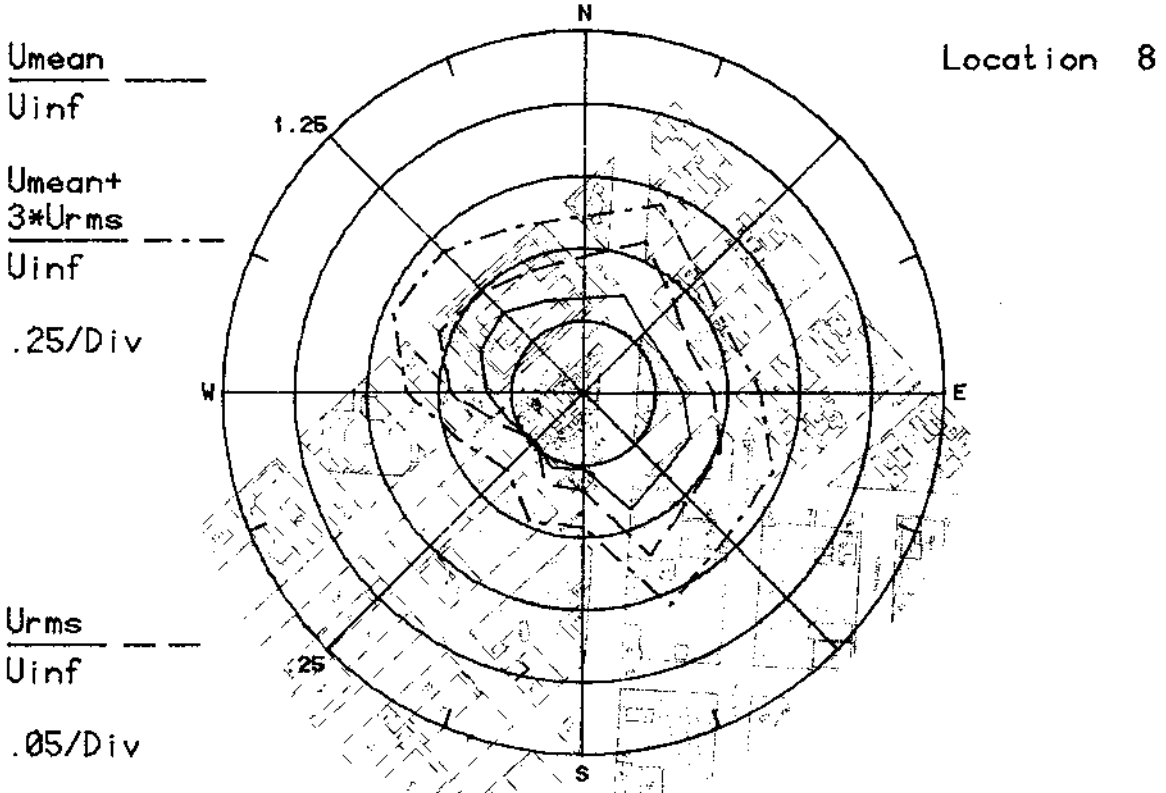

Figure 8d. Mean Velocities and Turbulence Intensities at Pedestrian Locations 7 and 8

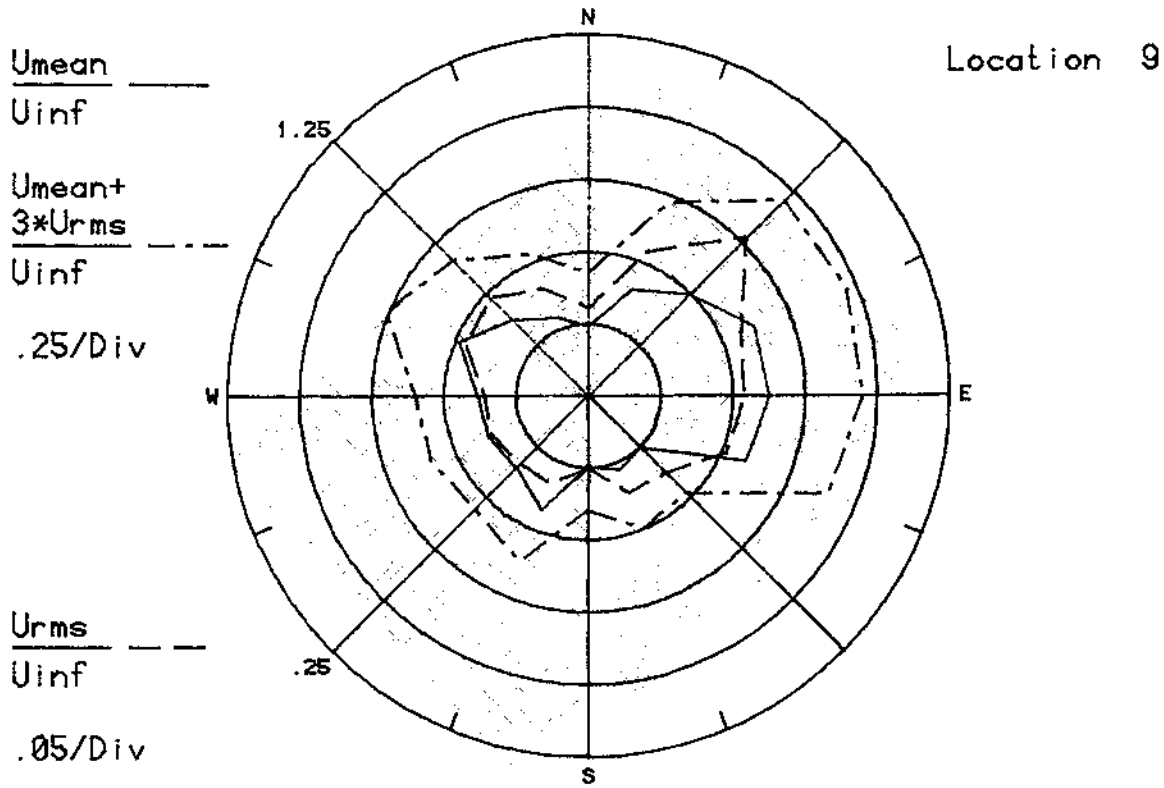

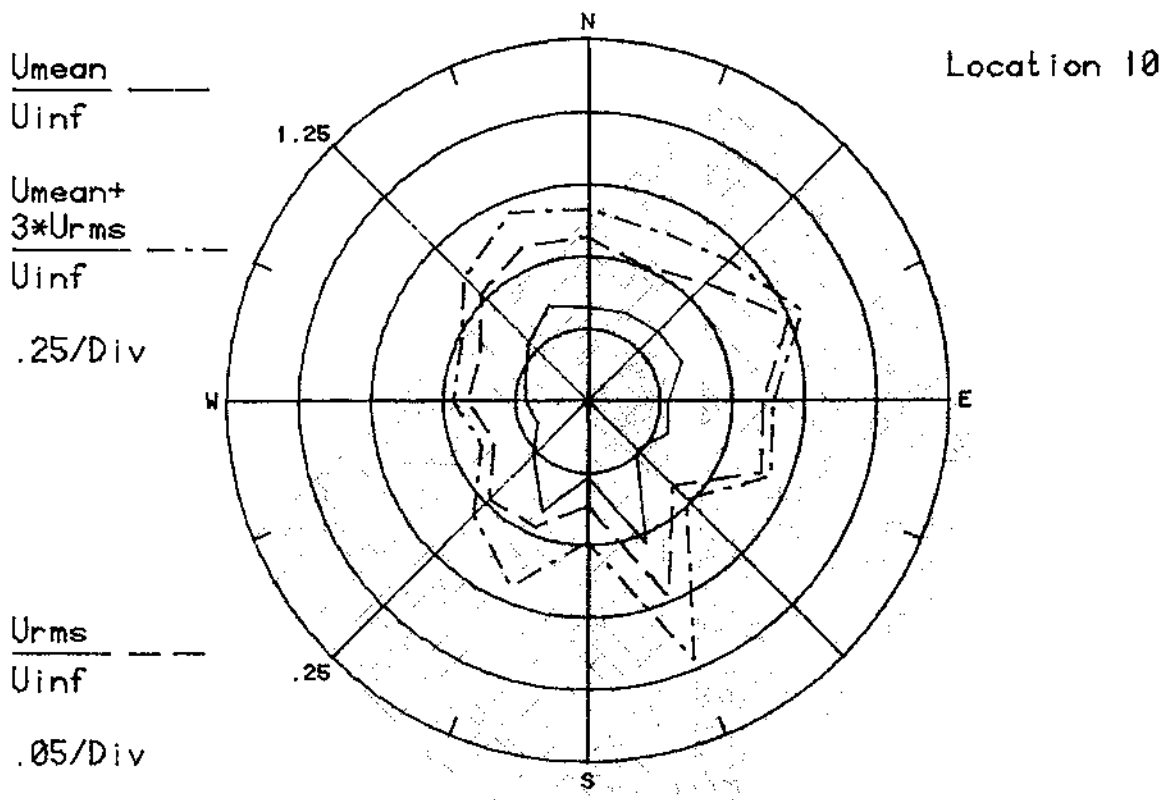

Figure 8e. Mean Velocities and Turbulence Intensities at Pedestrian Locations 9 and 10

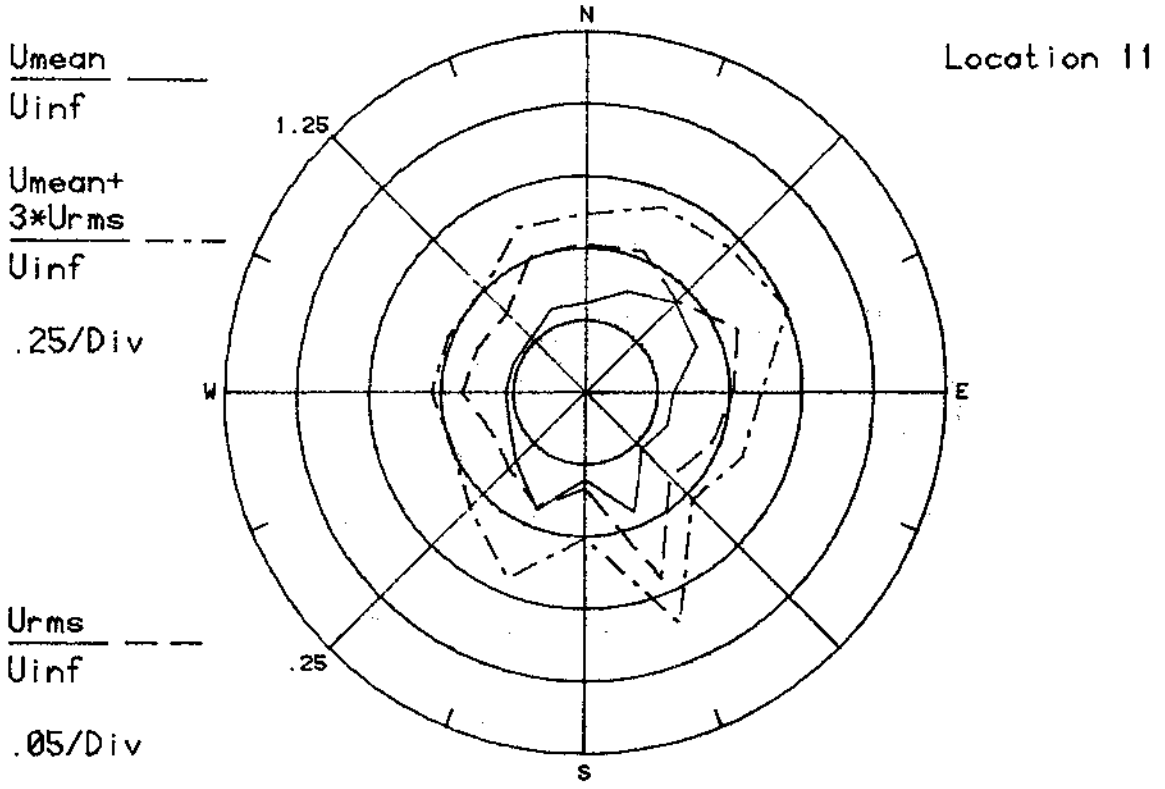

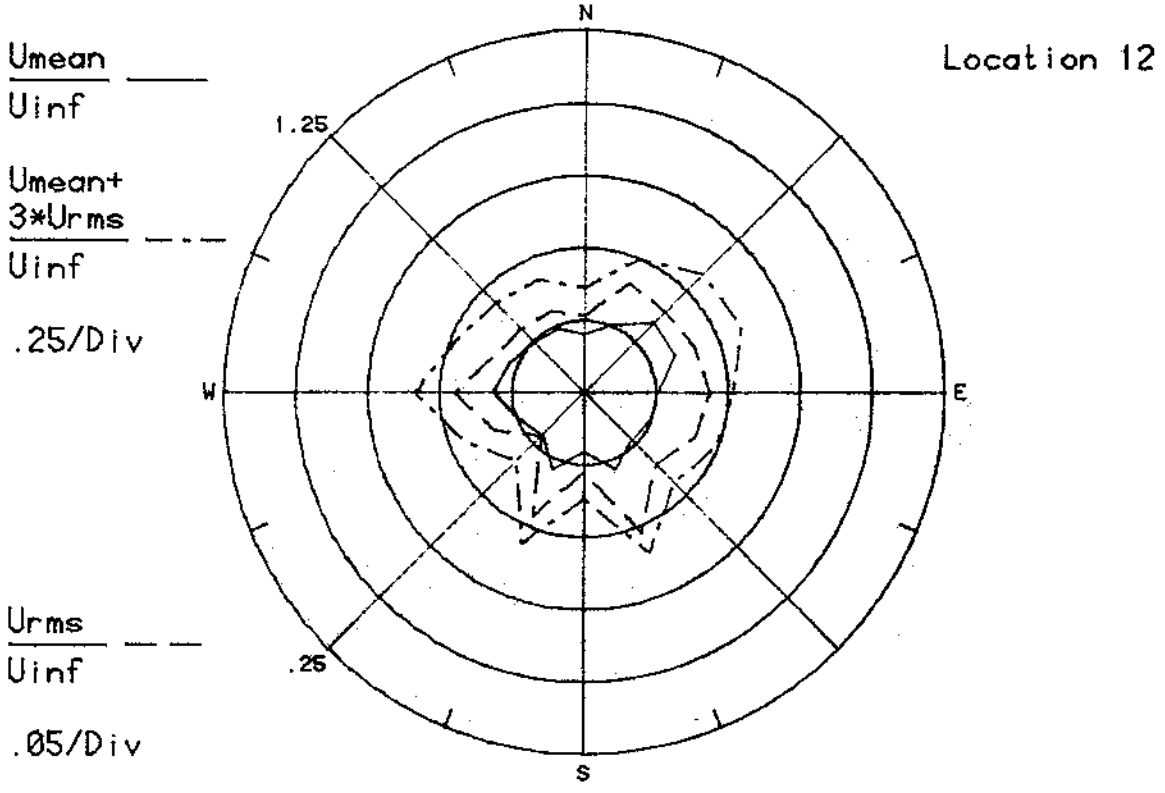

Figure 8f. Mean Velocities and Turbulence Intensities at Pedestrian Locations 11 and 12

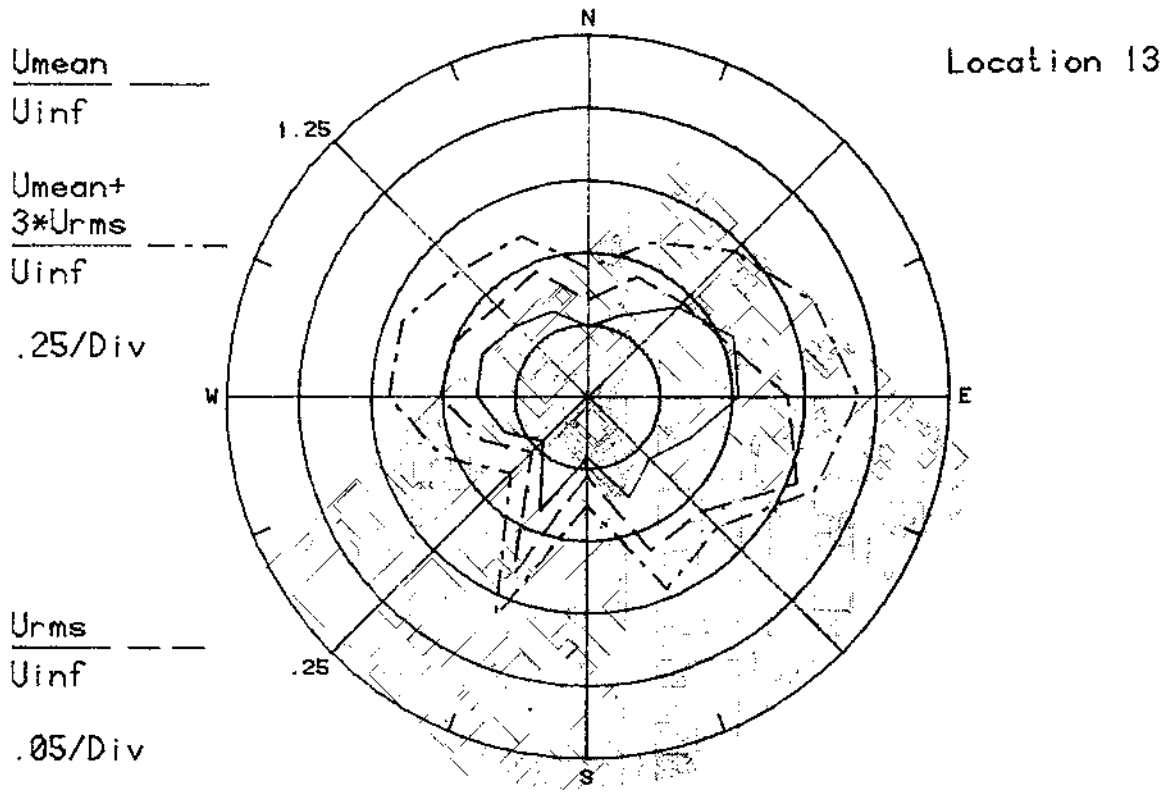

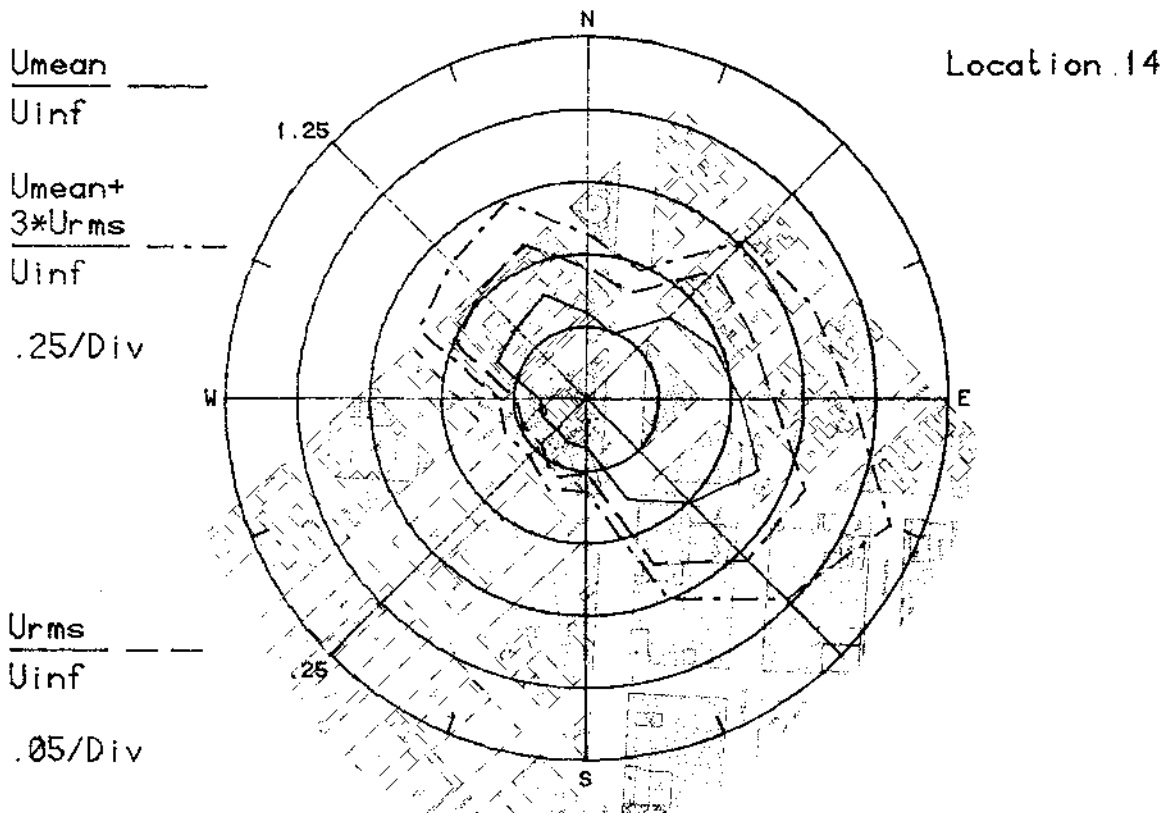

Figure 8g. Mean Velocities and Turbulence Intensities at Pedestrian Locations 13 and 14

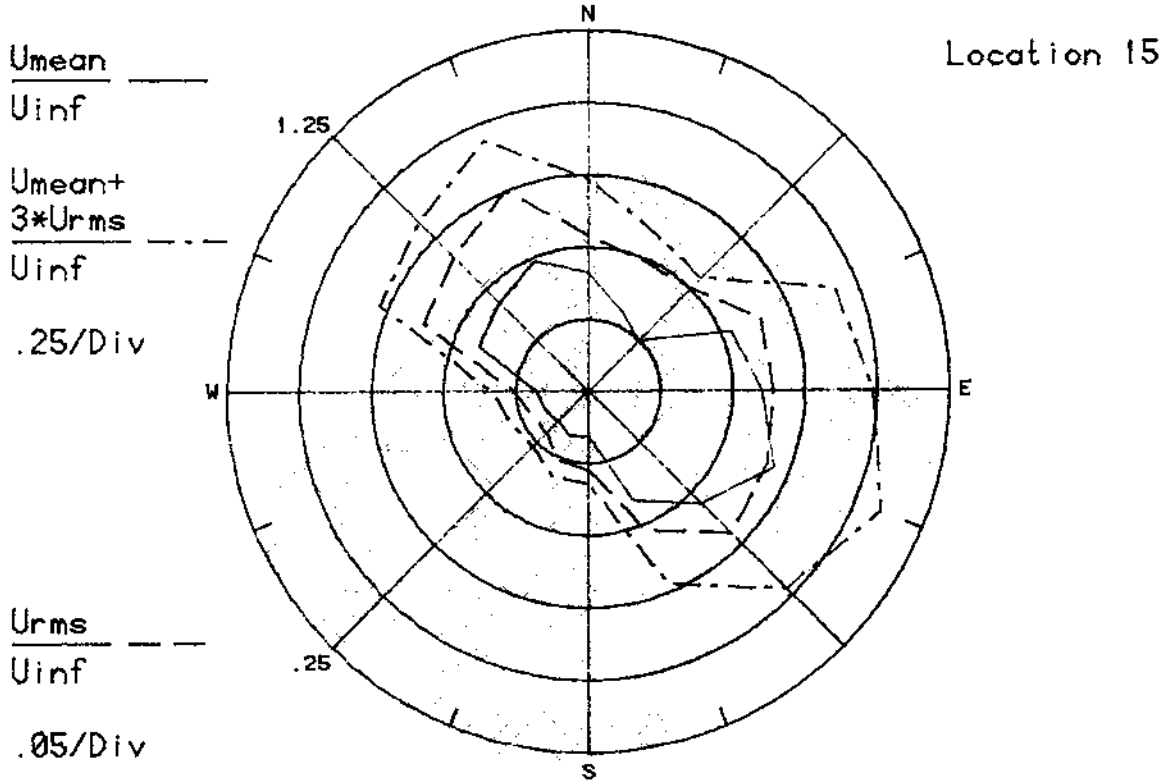

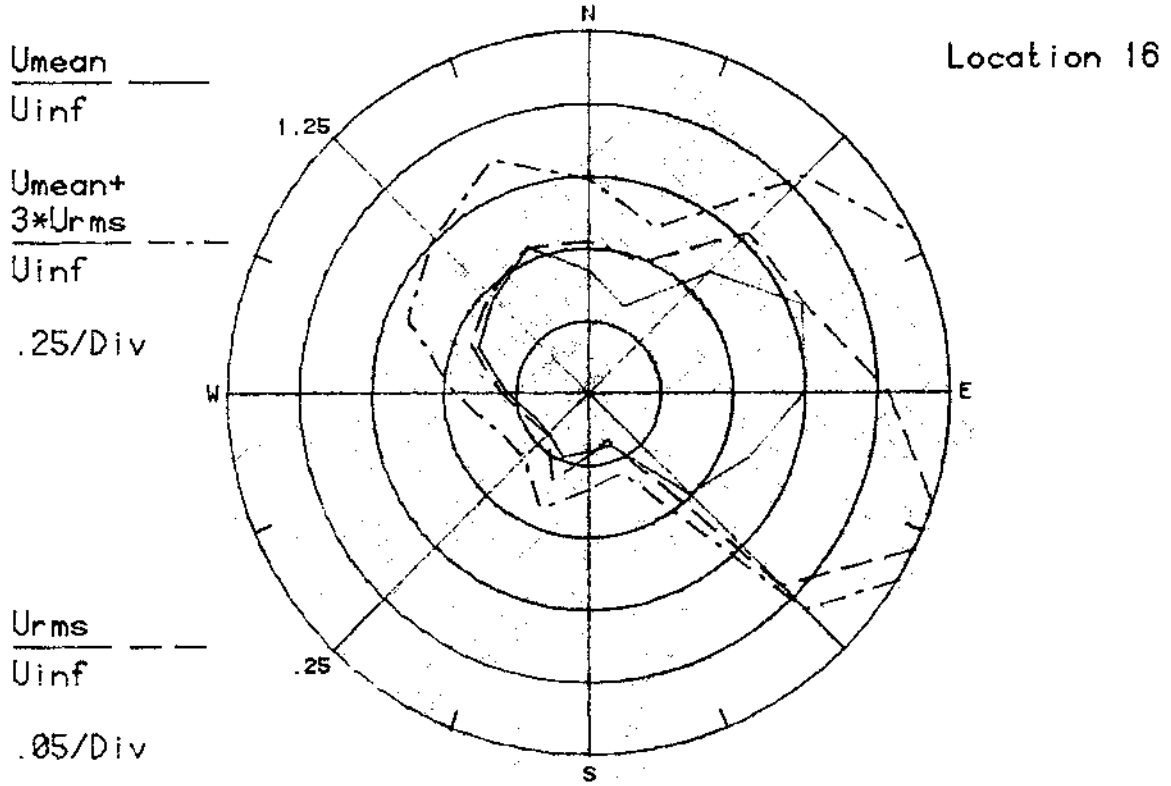

Figure 8h. Mean Velocities and Turbulence Intensities at Pedestrian Locations 15 and 16

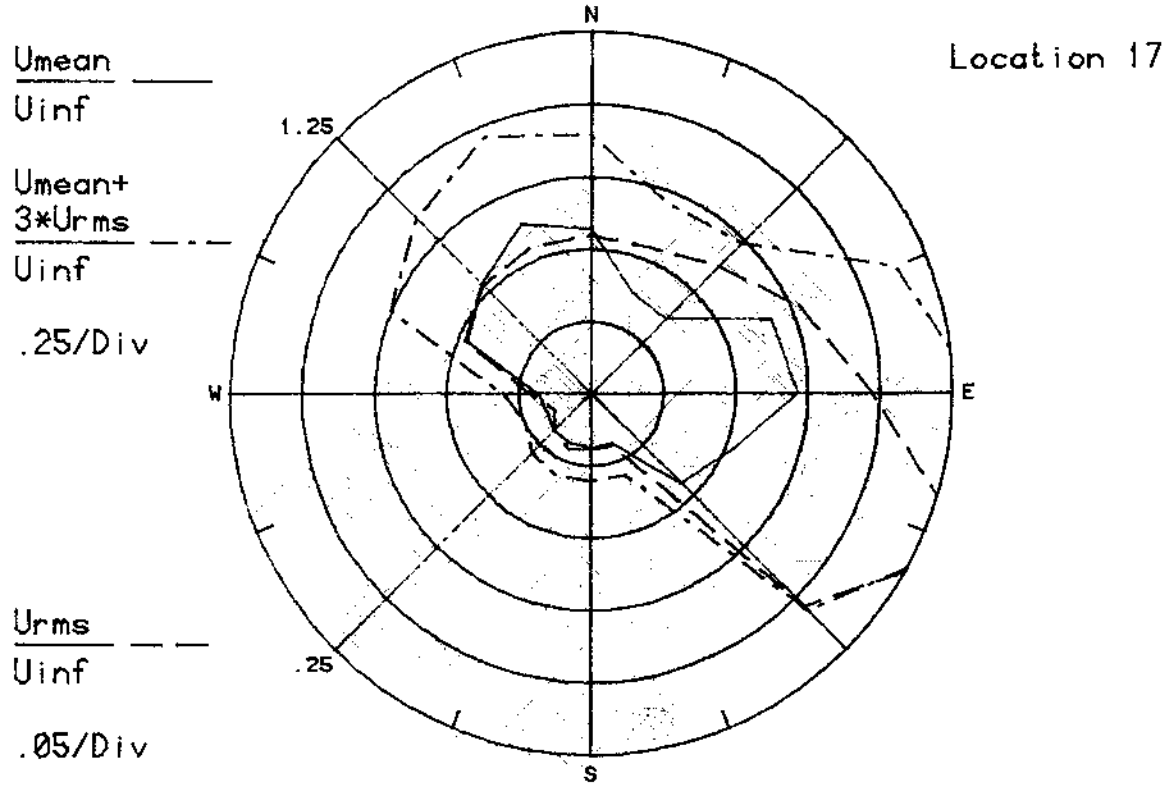

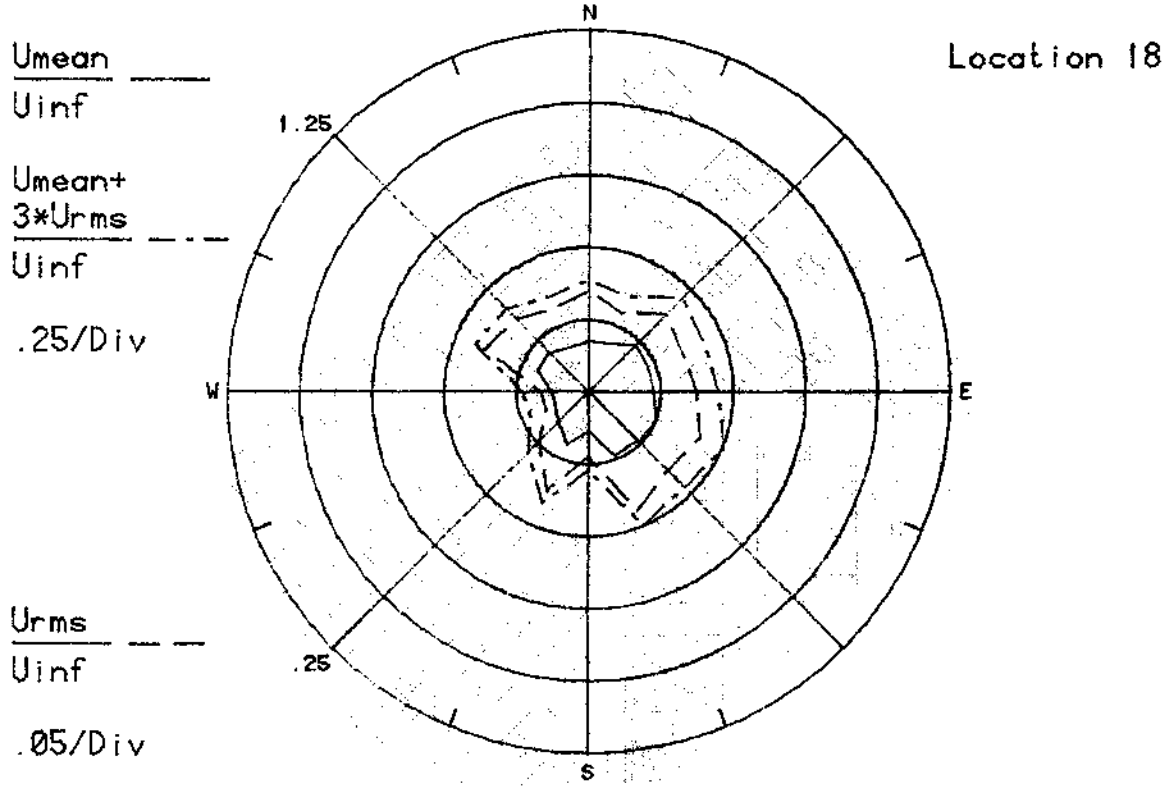

Figure 8i. Mean Velocities and Turbulence Intensities at Pedestrian Locations 17 and 18

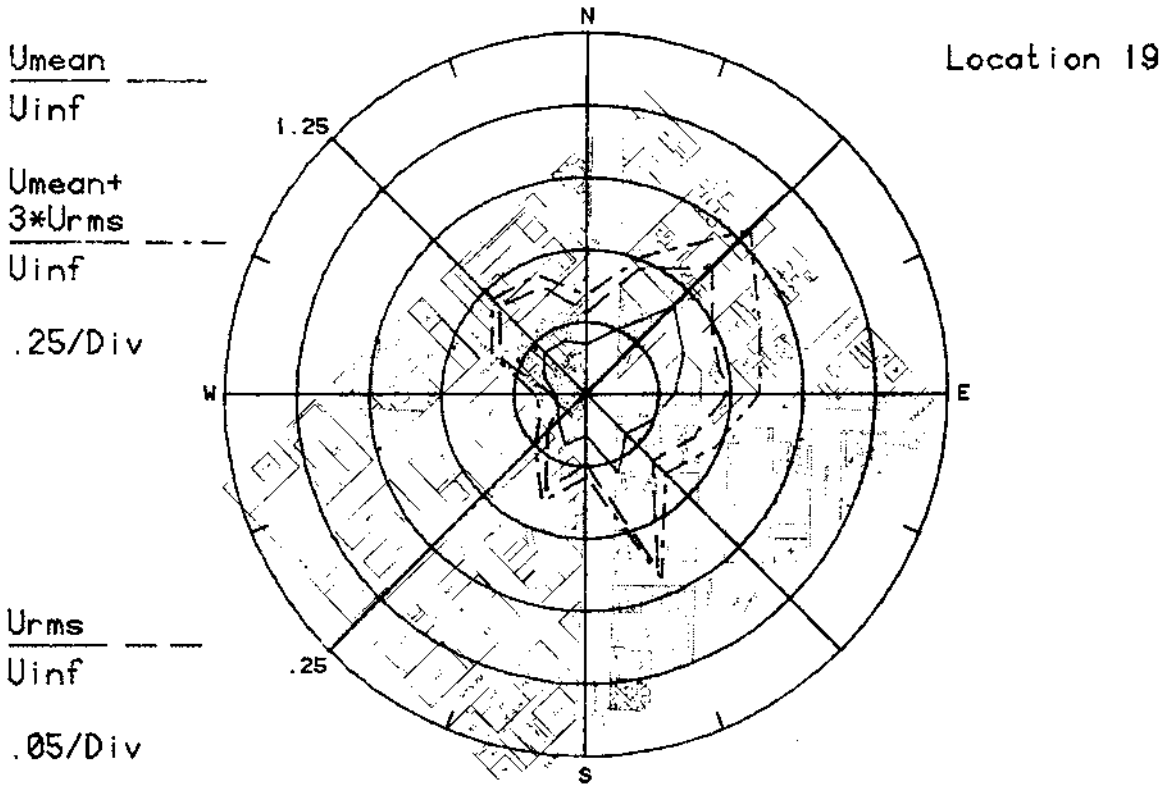

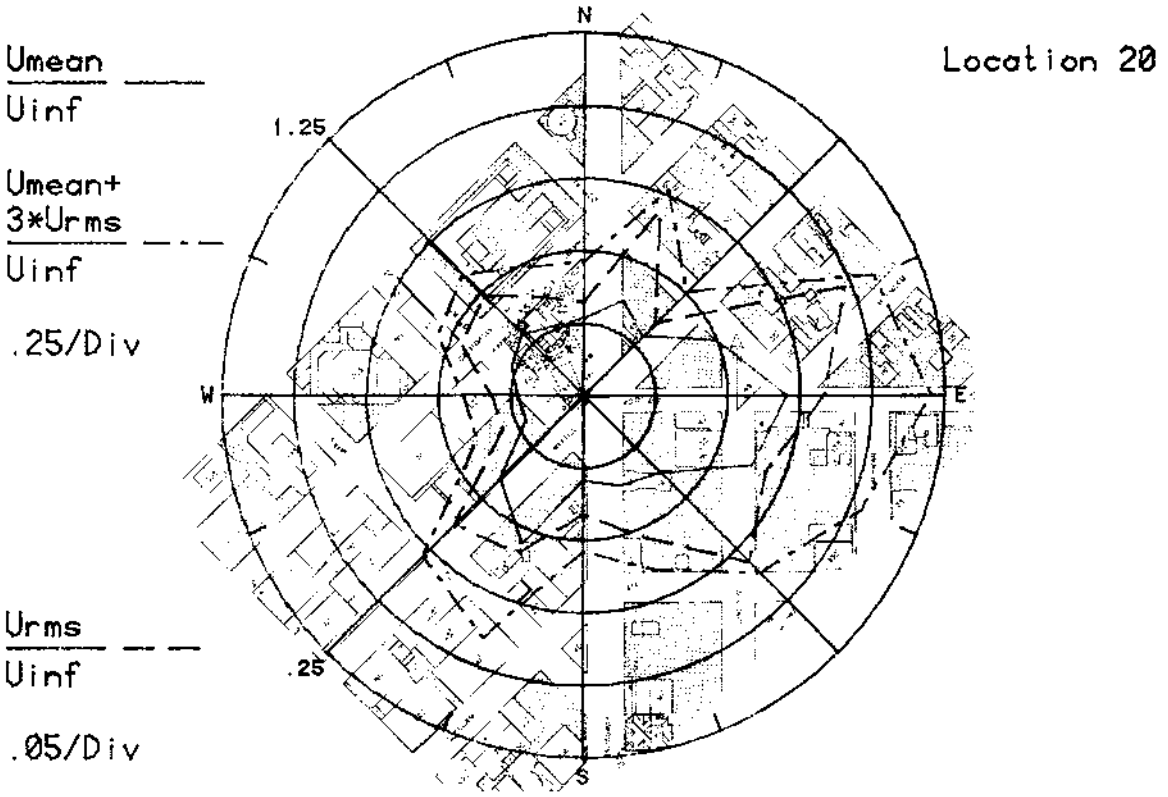

Figure 8j. Mean Velocities and Turbulence Intensities at Pedestrian Locations 19 and 20

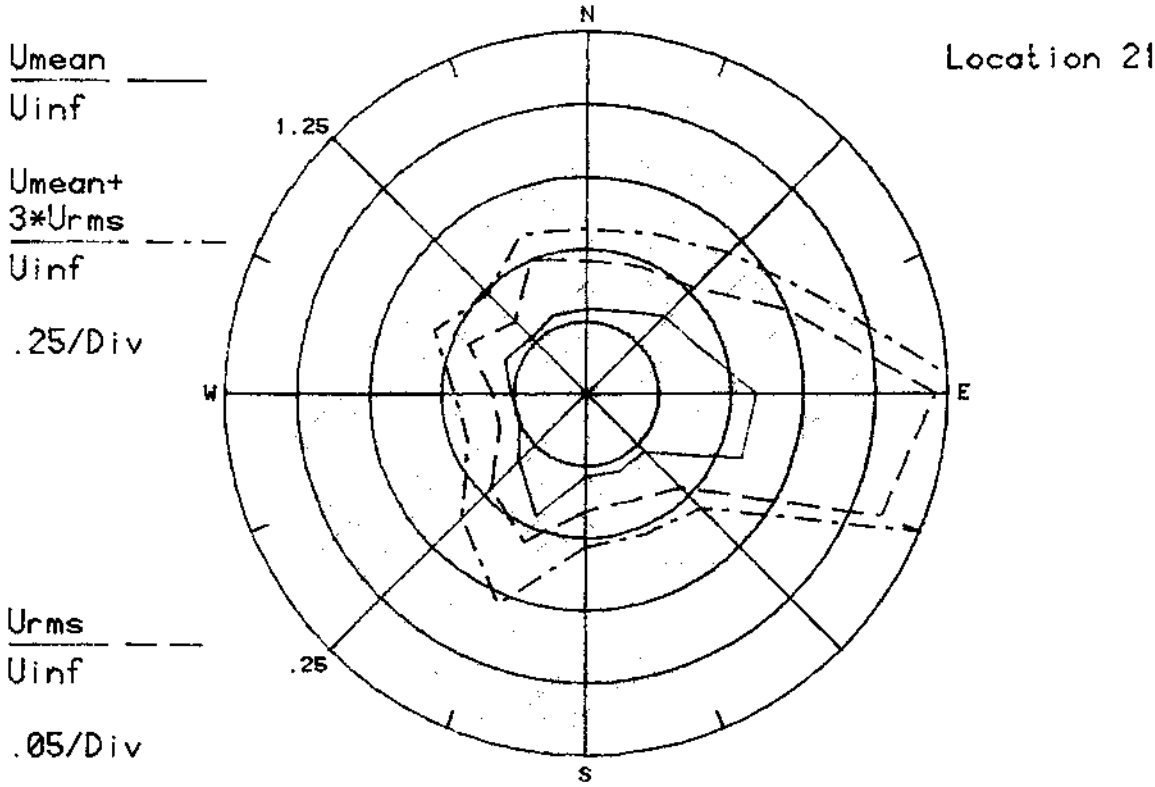

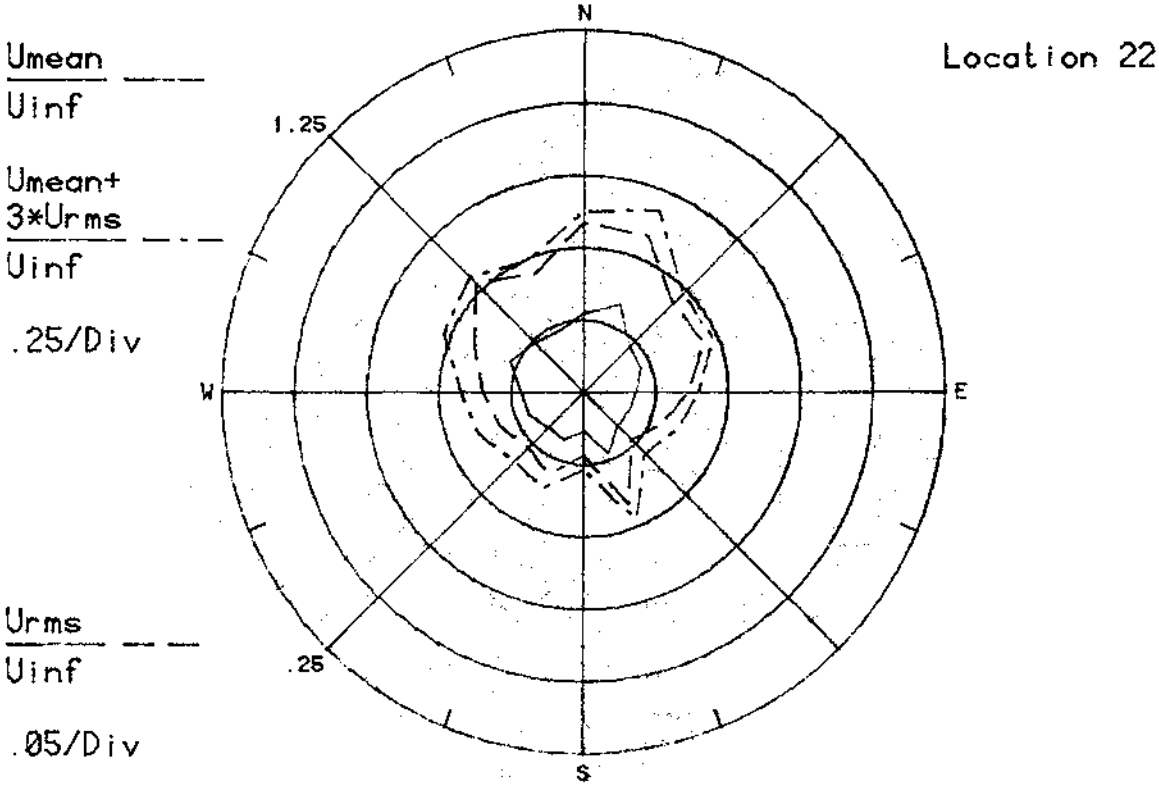

Figure 8k. Mean Velocities and Turbulence Intensities at Pedestrian Locations 21 and 22

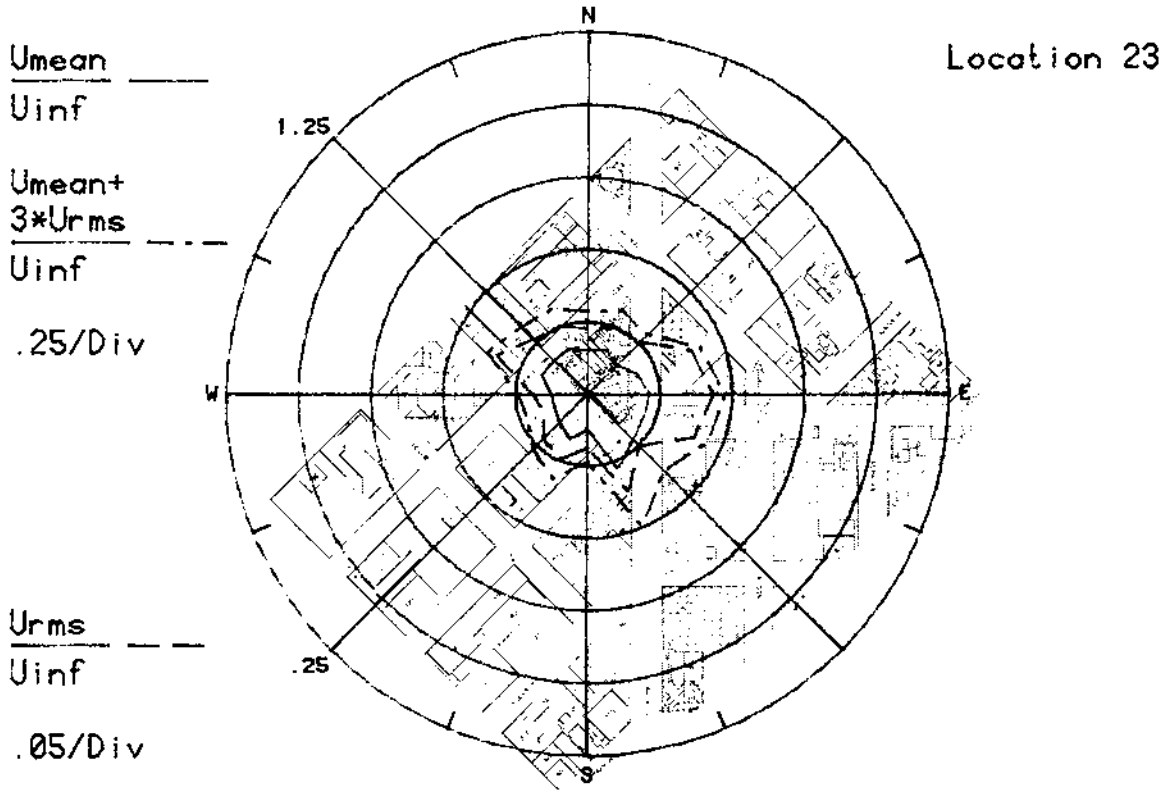

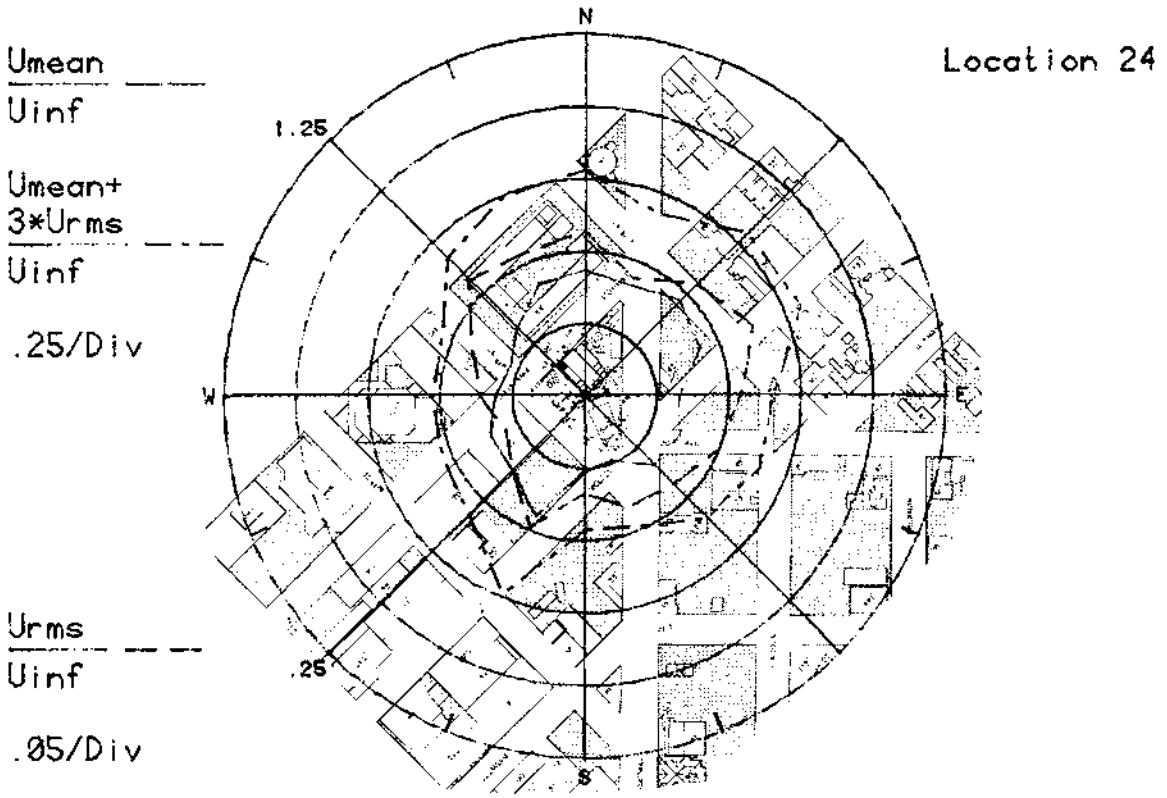

Figure 81. Mean Velocities and Turbulence Intensities at Pedestrian Locations 23 and 24

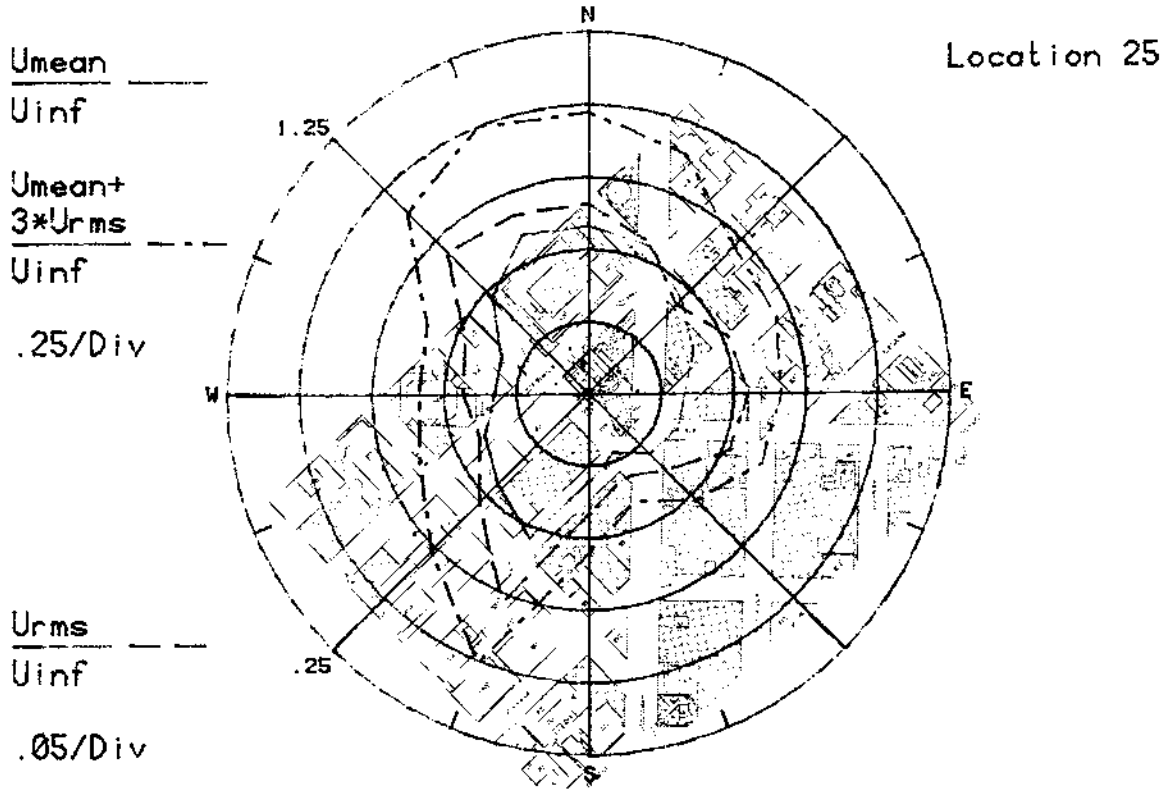

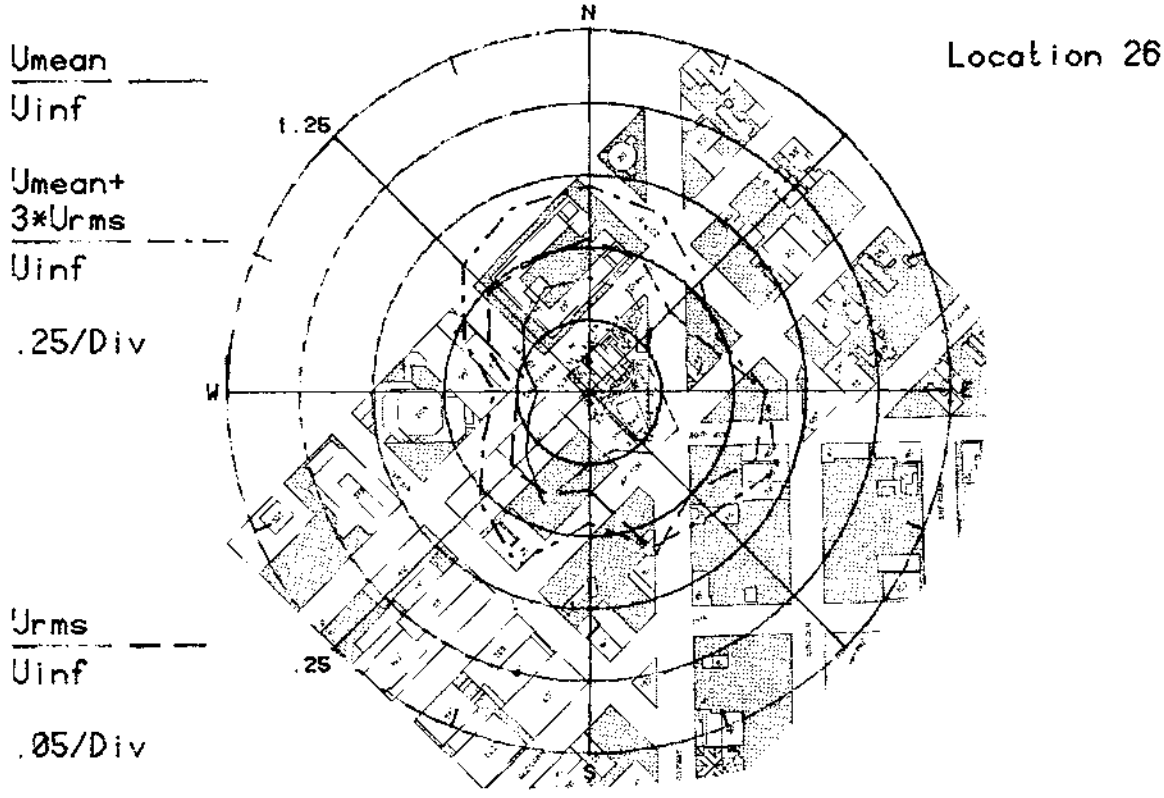

Figure 8m. Mean Velocities and Turbulence Intensities at Pedestrian Locations 25 and 26

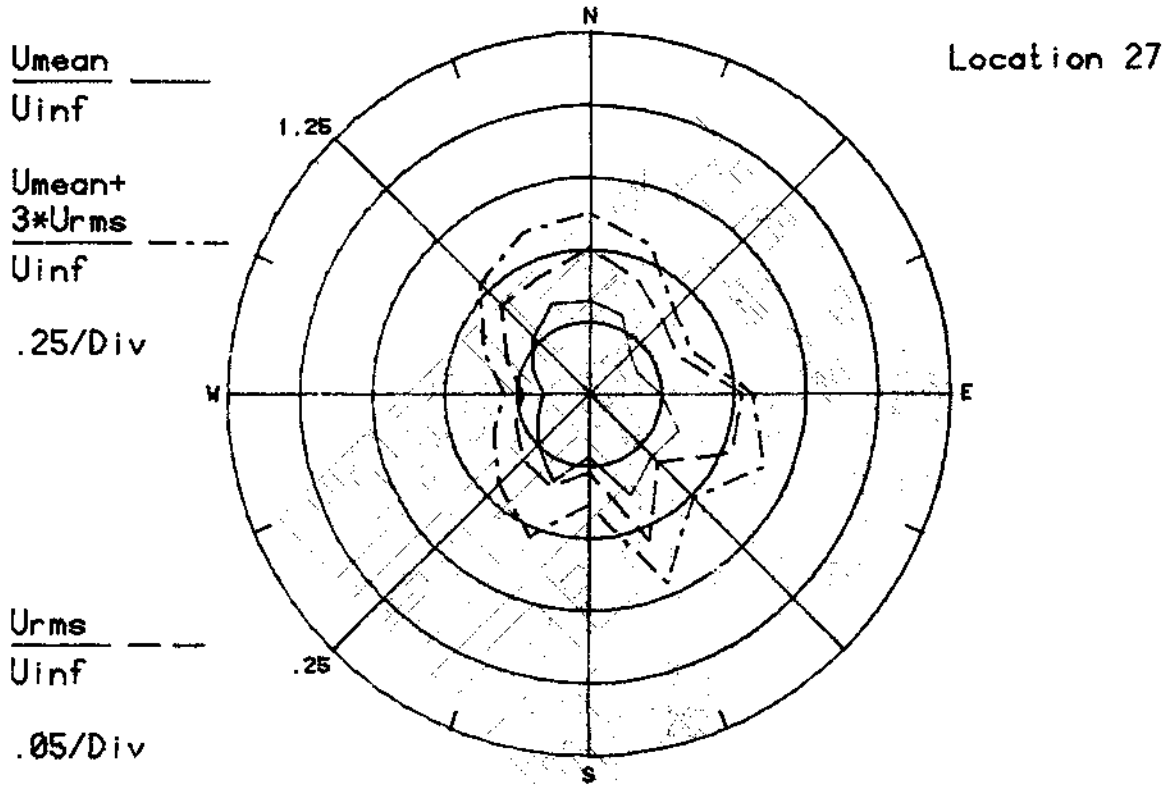

Figure 8n. Mean Velocities and Turbulence Intensities at Pedestrian Location 27

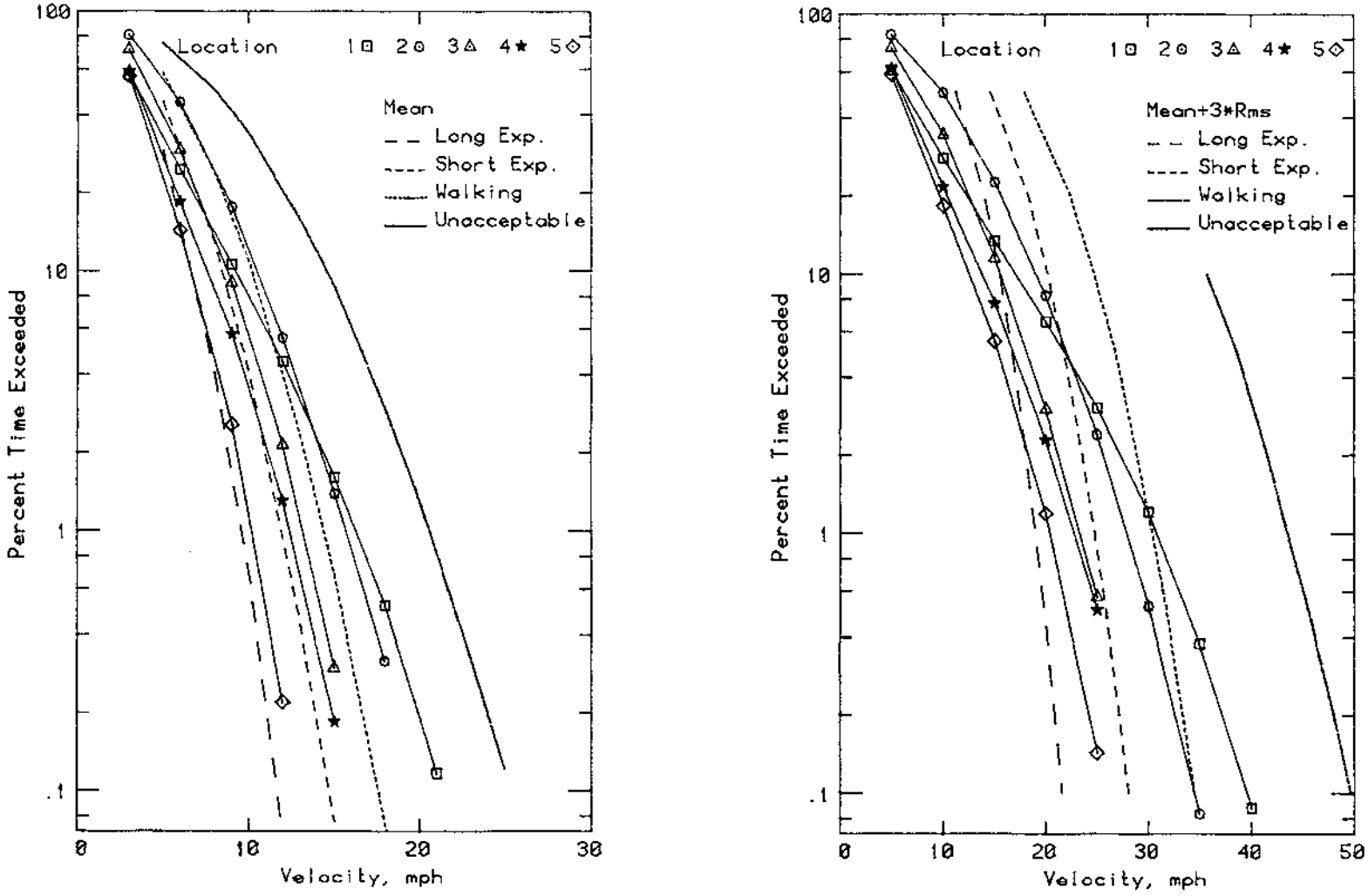

Figure 9a. Wind Velocity Probabilities for Pedestrian Locations

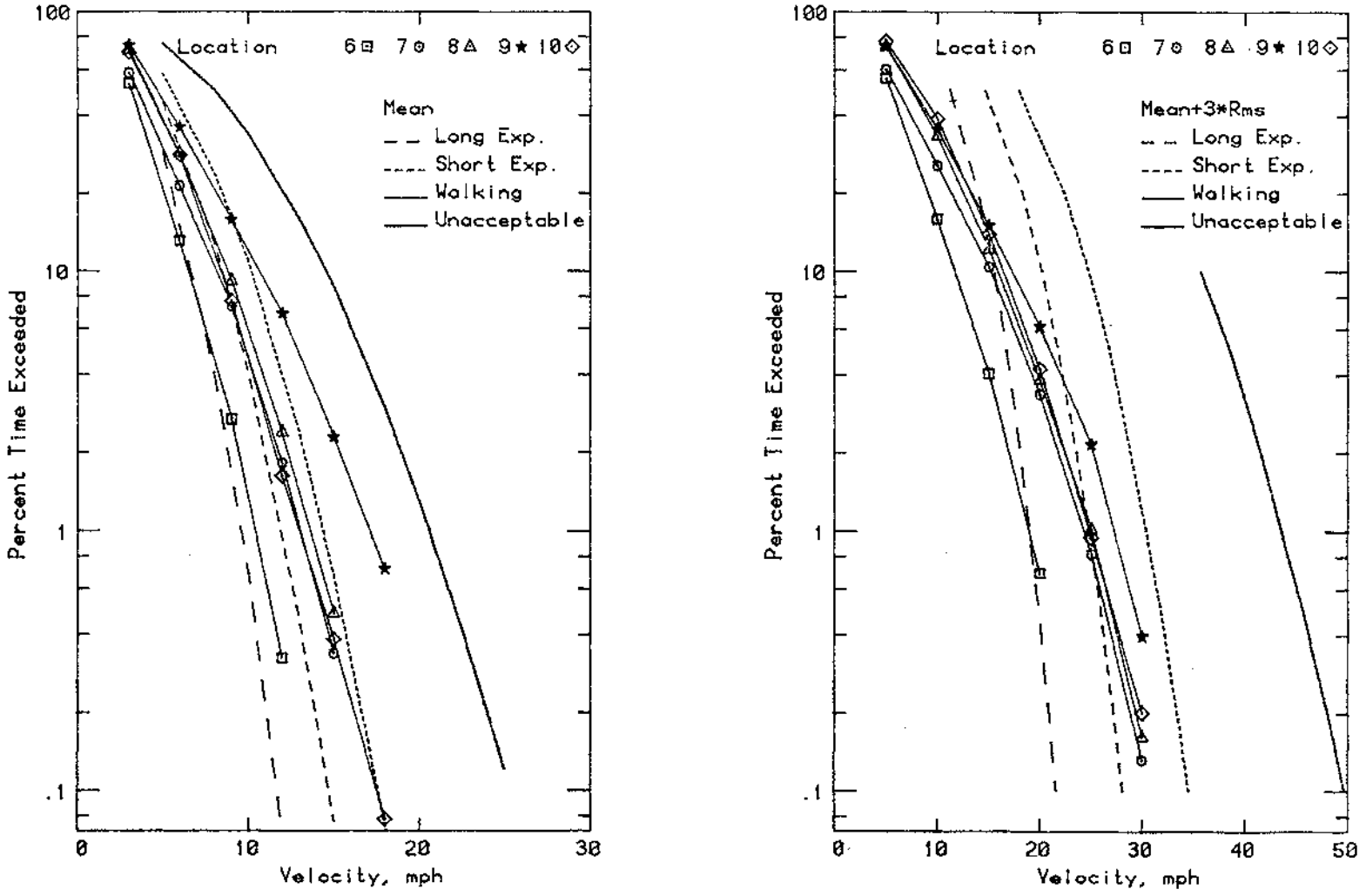

Figure 9b. Wind Velocity Probabilities for Pedestrian Locations

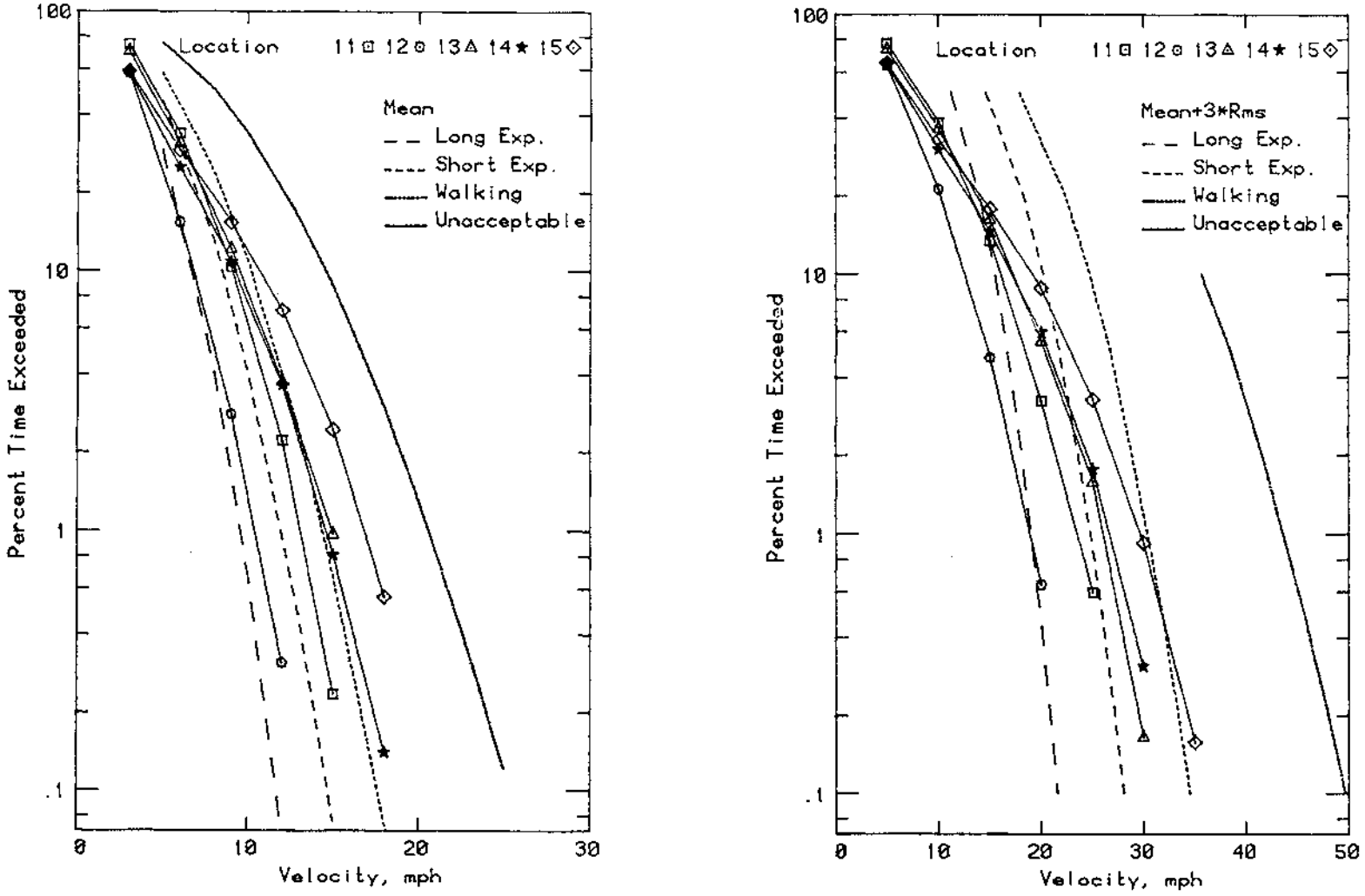

Figure 9c. Wind Velocity Probabilities for Pedestrian Locations

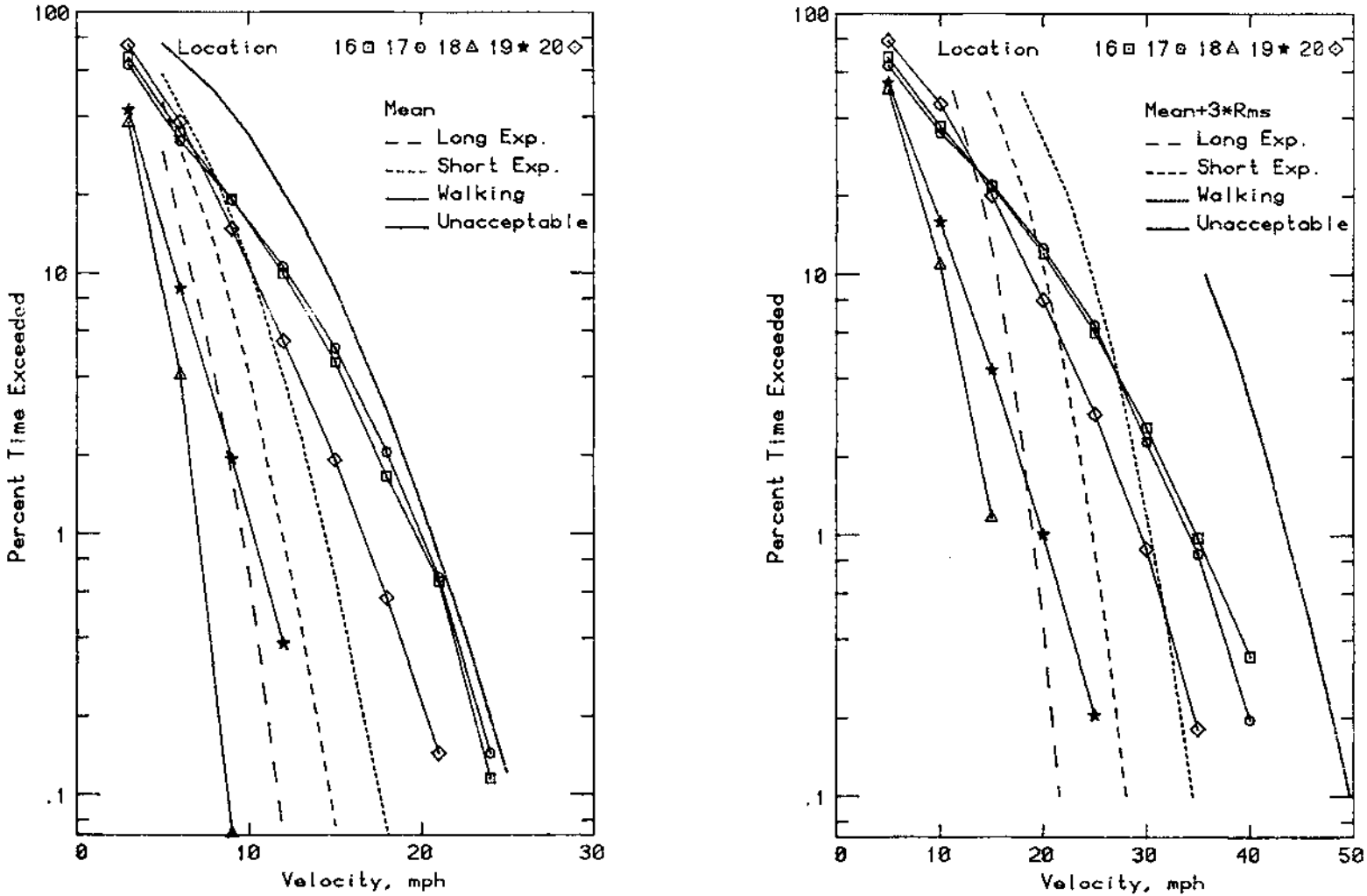

Figure 9d. Wind Velocity Probabilities for Pedestrian Locations

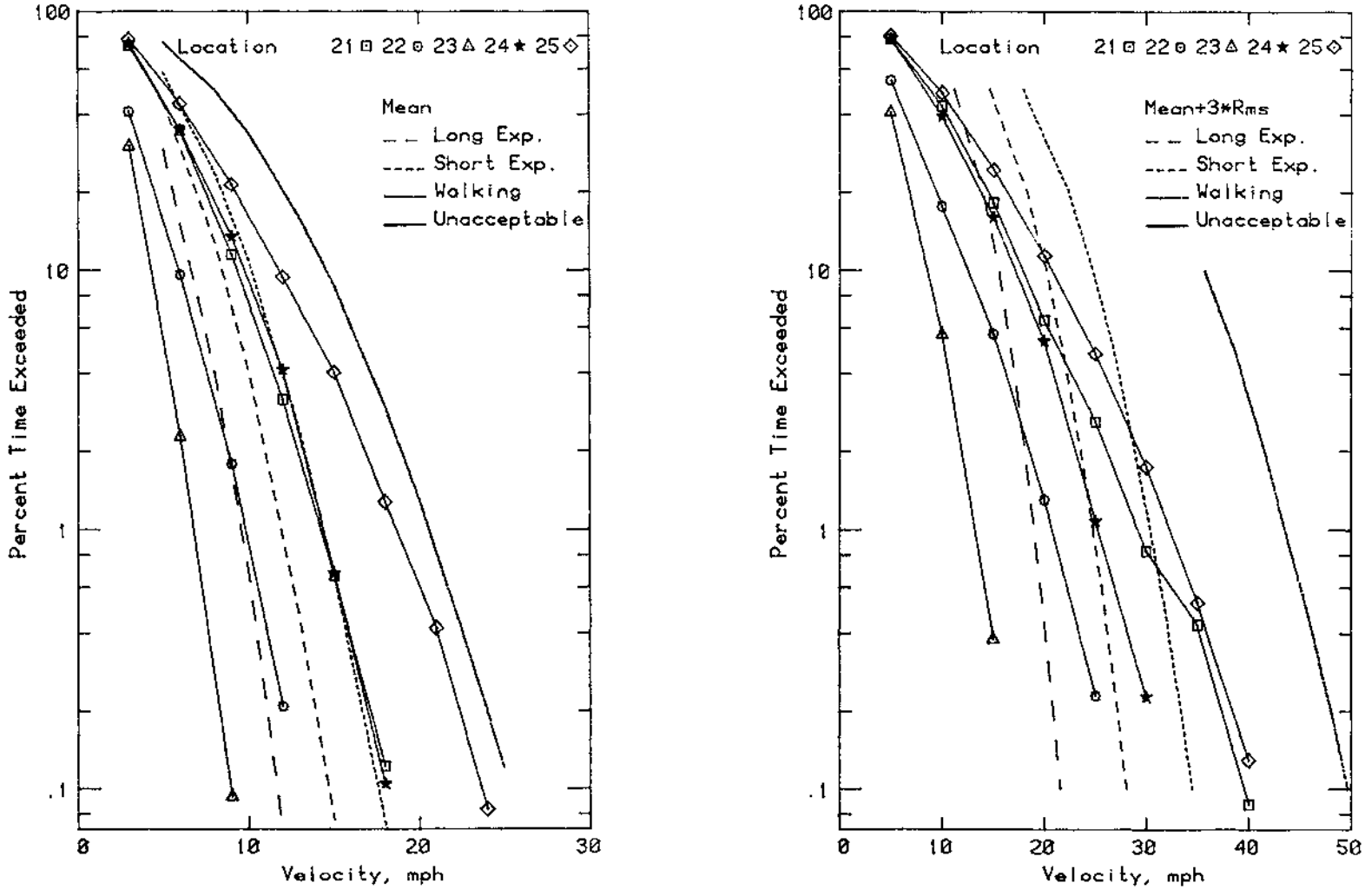

Figure 9e. Wind Velocity Probabilities for Pedestrian Locations

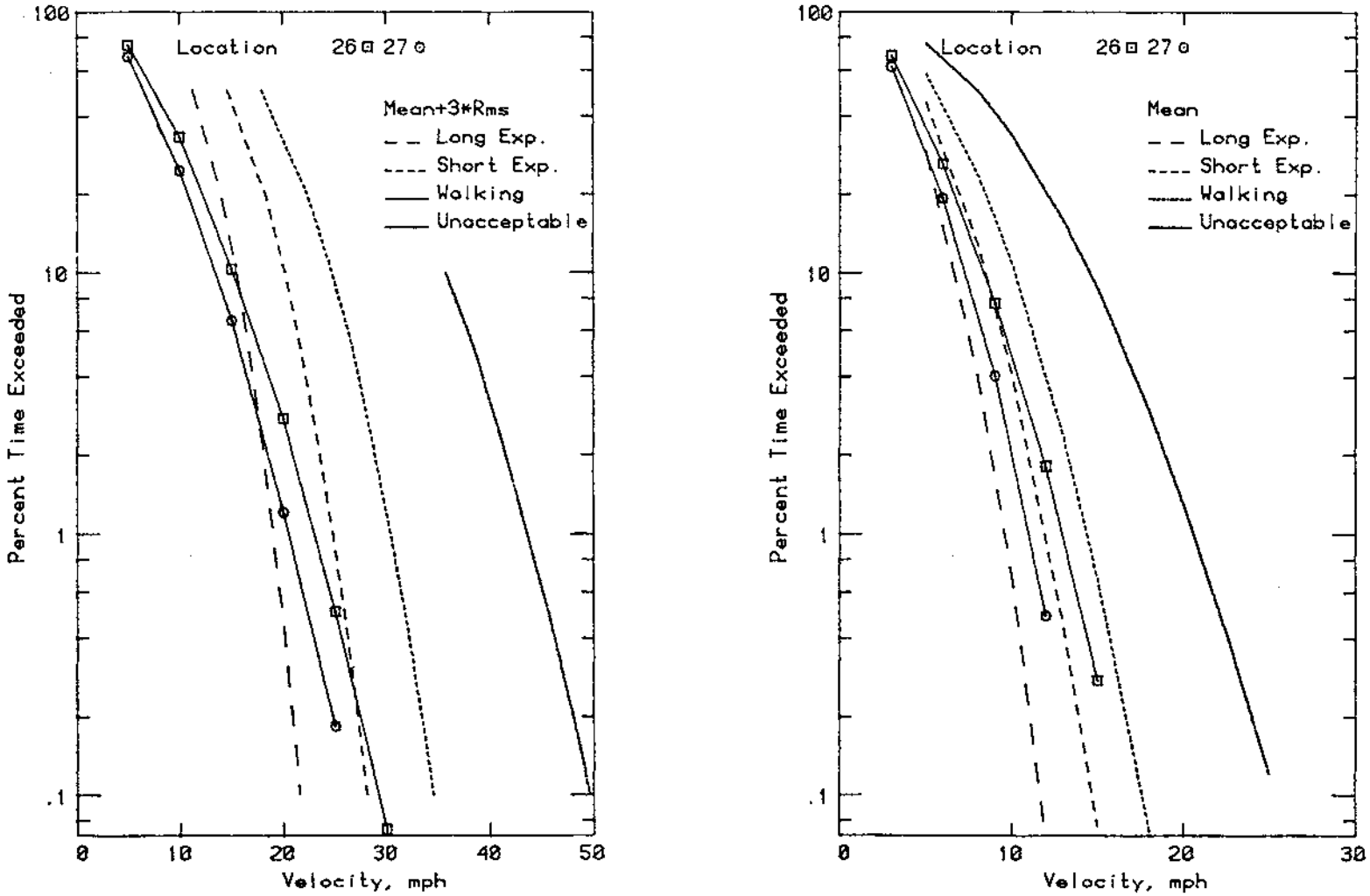

Figure 9f. Wind Velocity Probabilities for Pedestrian Locations

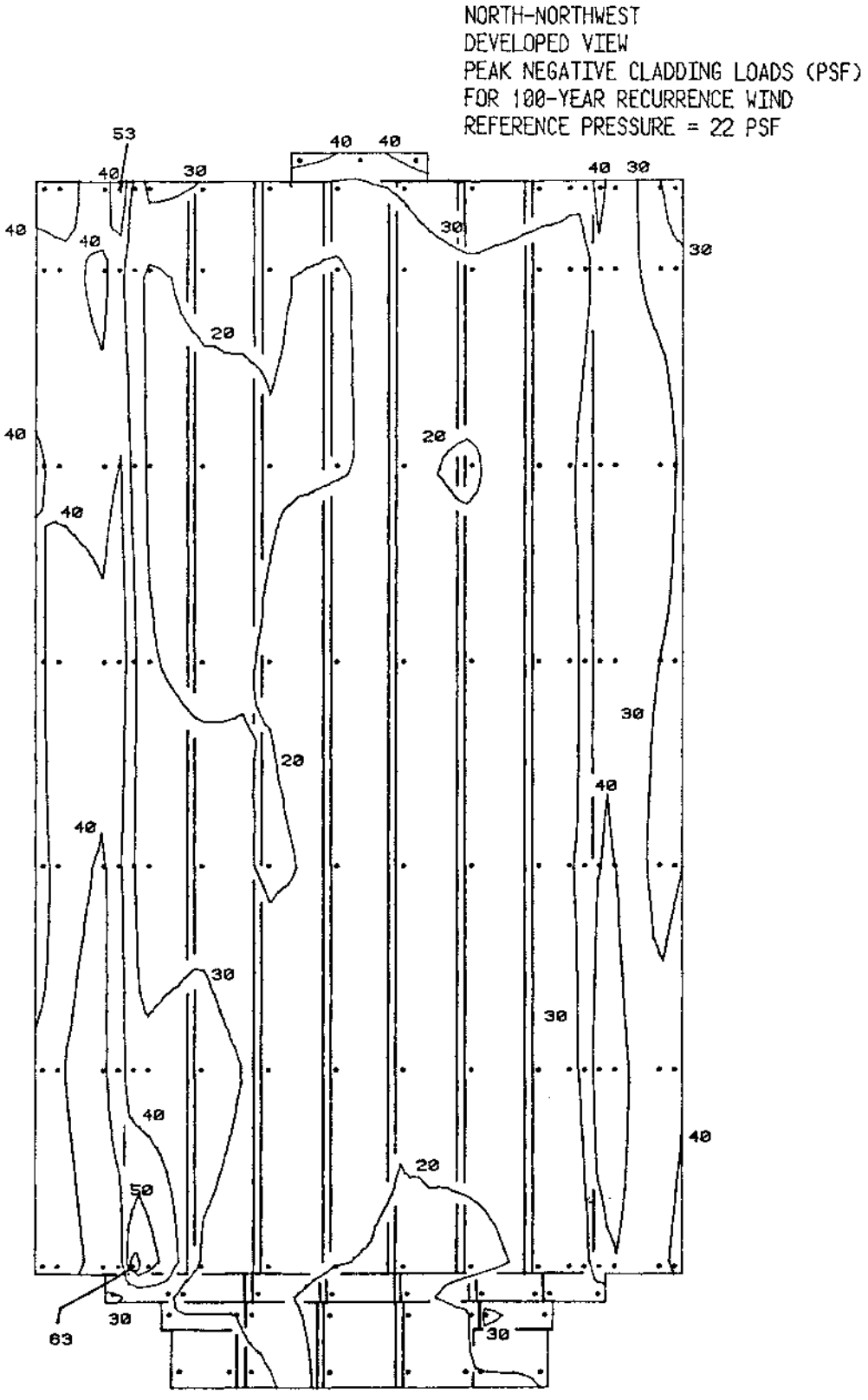

Figure 10a. Peak Pressure Contours on the Building for Cladding Loads

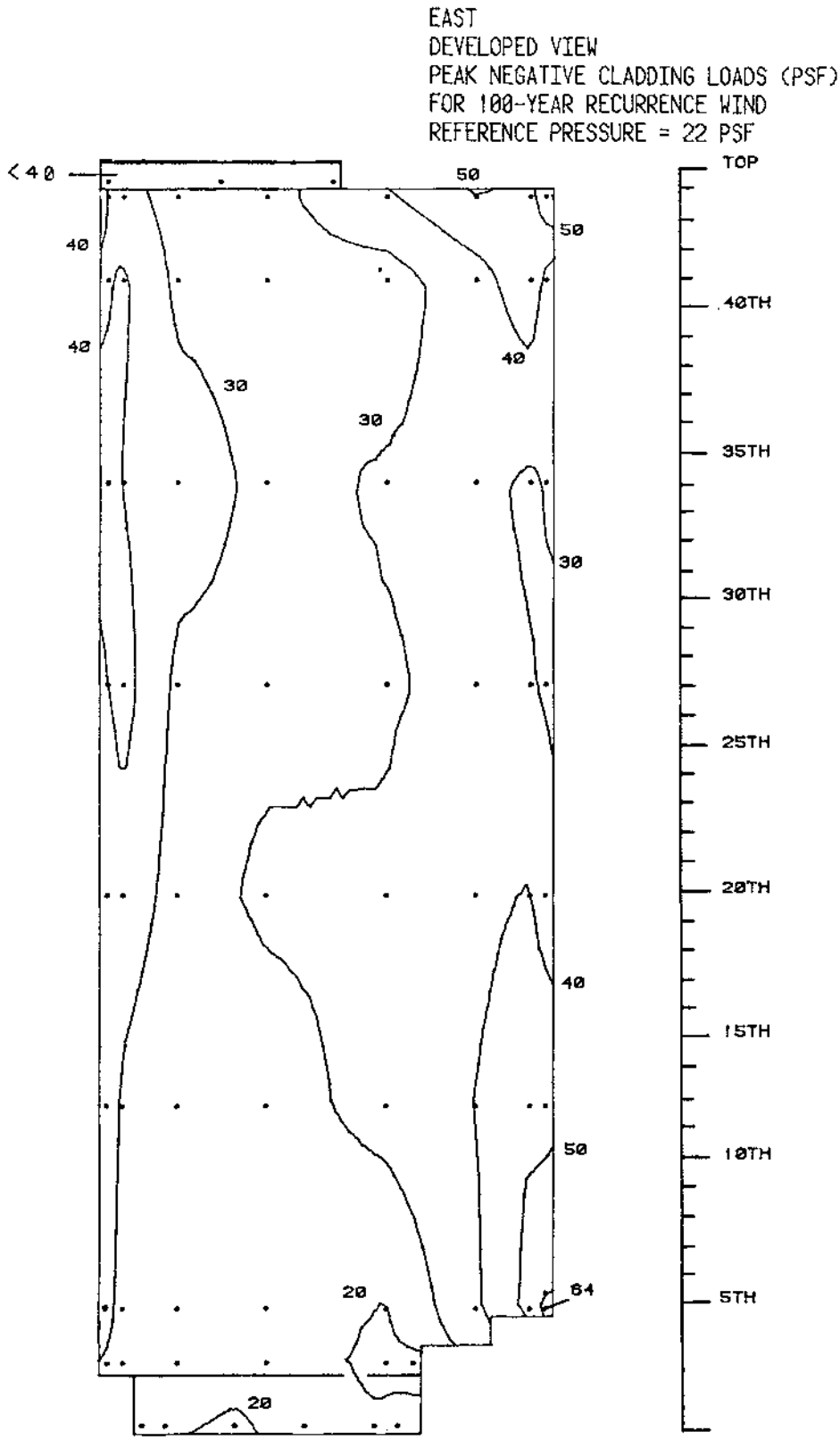

Figure 10b. Peak Pressure Contours on the Building for Cladding Loads

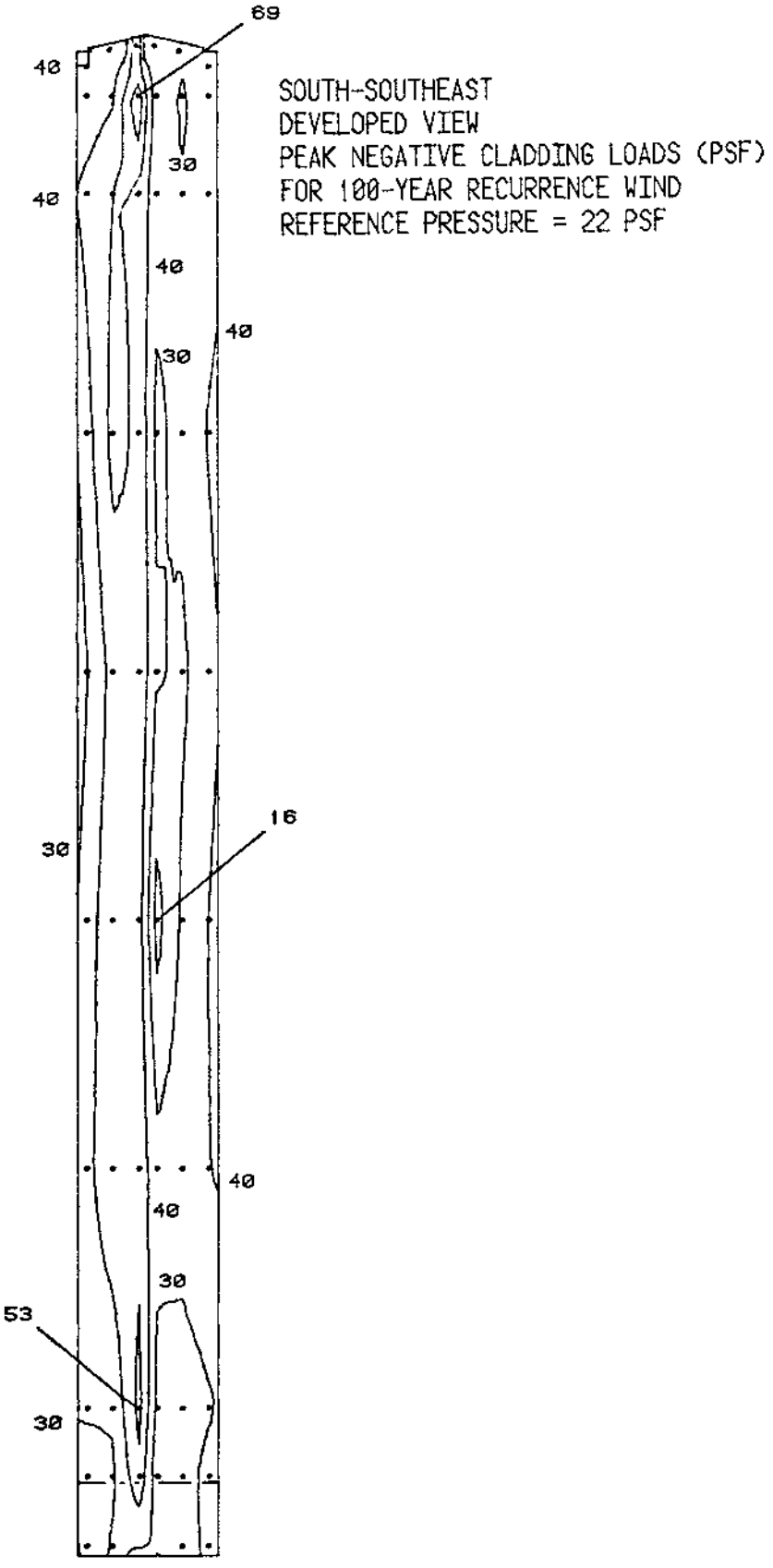

Figure 10c. Peak Pressure Contours on the Building for Cladding Loads

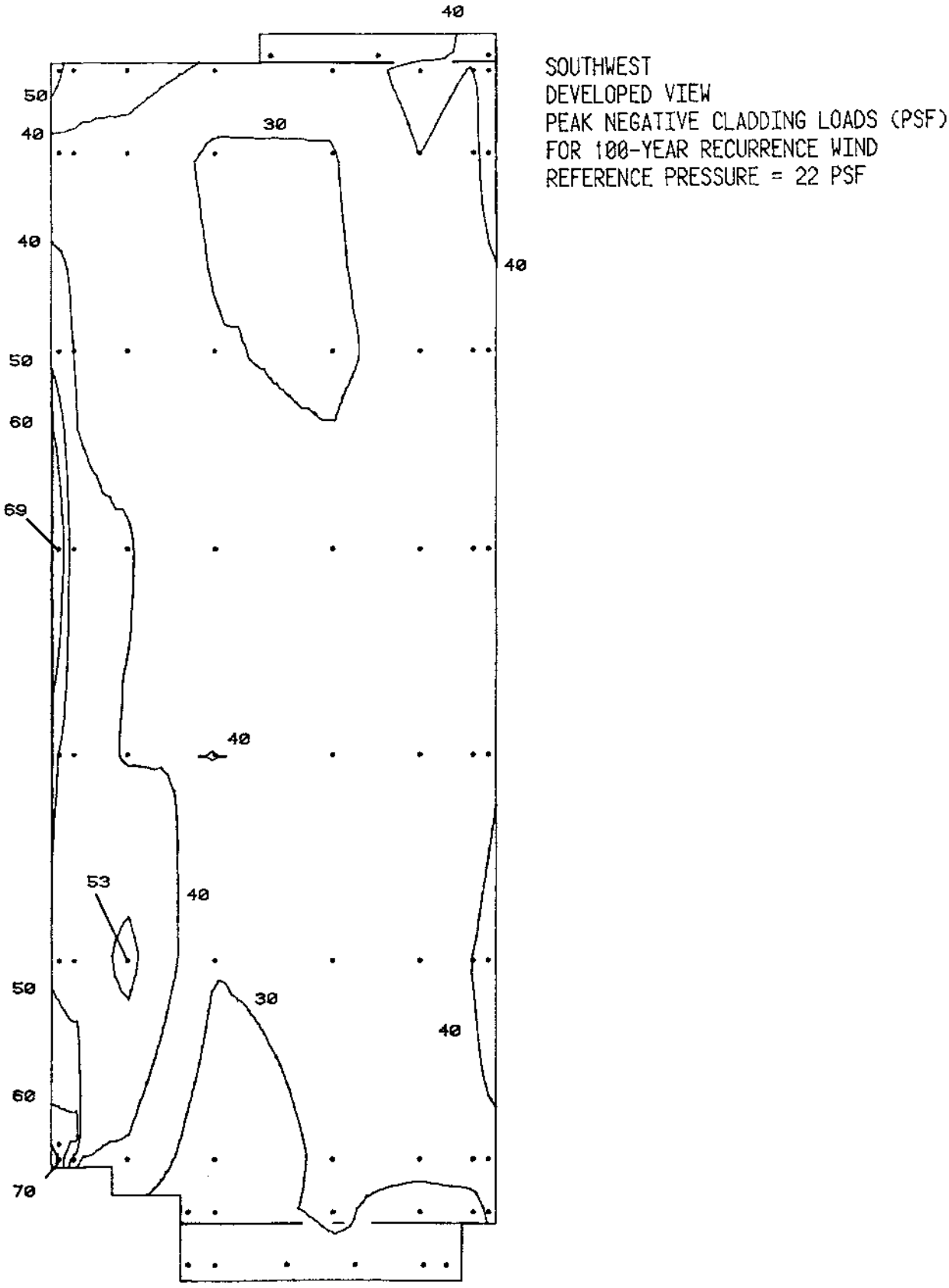

Figure 10d. Peak Pressure Contours on the Building for Cladding Loads

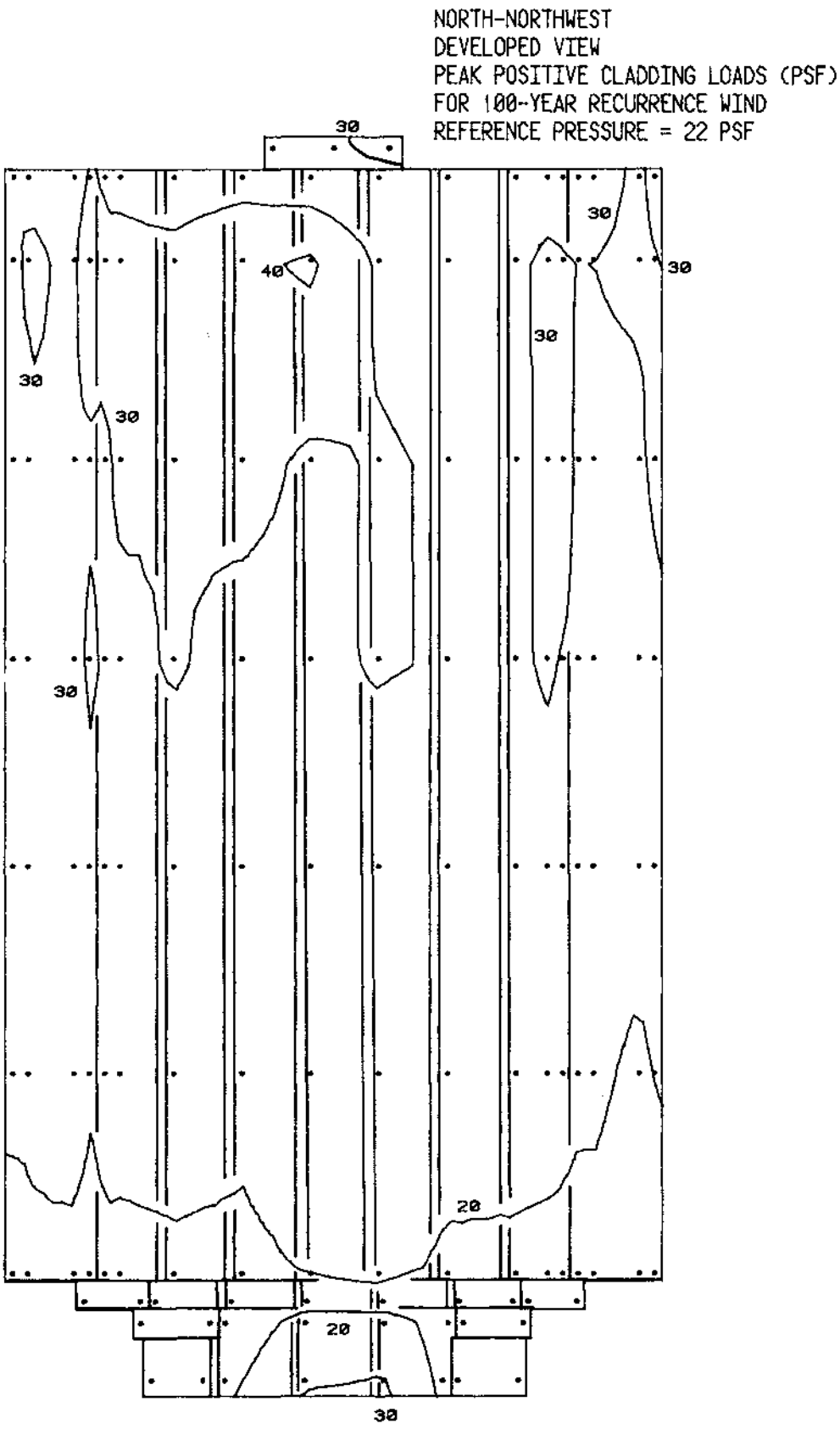

Figure 10e. Peak Pressure Contours on the Building for Cladding Loads

EAST
DEVELOPED VIEW
PEAK POSITIVE CLADDING LOADS (PSF)
FOR 100-YEAR RECURRENCE WIND
REFERENCE PRESSURE = 22 PSF

Figure 10f. Peak Pressure Contours on the Building for Cladding Loads

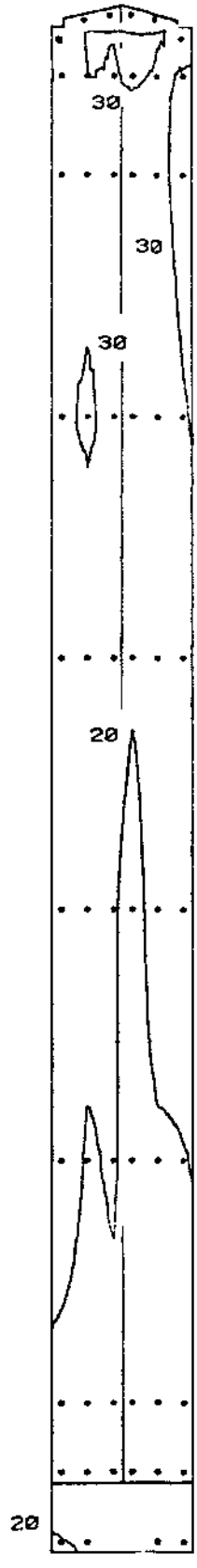

SOUTH-SOUTHEAST
DEVELOPED VIEW
PEAK POSITIVE CLADDING LOADS (PSF)
FOR 100-YEAR RECURRENCE WIND
REFERENCE PRESSURE = 22 PSF

Figure 10g. Peak Pressure Contours on the Building for Cladding Loads

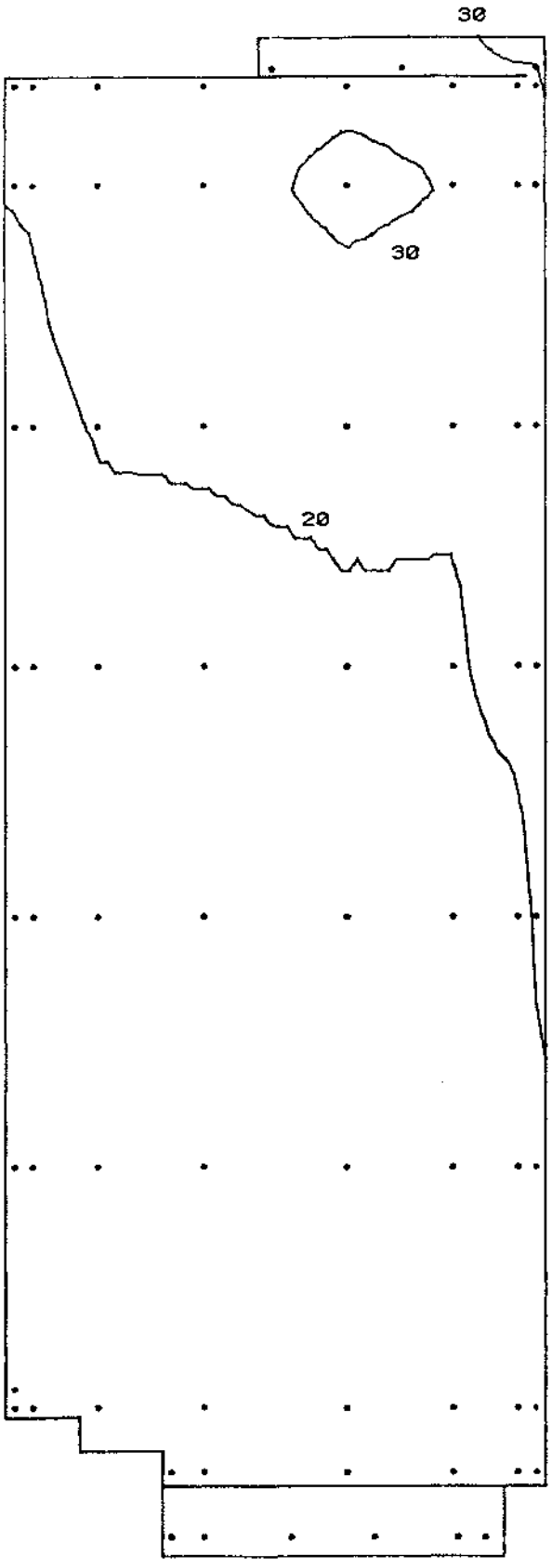

SOUTHWEST
DEVELOPED VIEW
PEAK POSITIVE CLADDING LOADS (PSF)
FOR 100-YEAR RECURRENCE WIND
REFERENCE PRESSURE = 22 PSF

Figure 10h. Peak Pressure Contours on the Building for Cladding Loads

CONFIGURATION A
PEAK NEGATIVE CLADDING LOADS (PSF)
FOR 100-YEAR RECURRENCE WIND
REFERENCE PRESSURE = 22 PSF

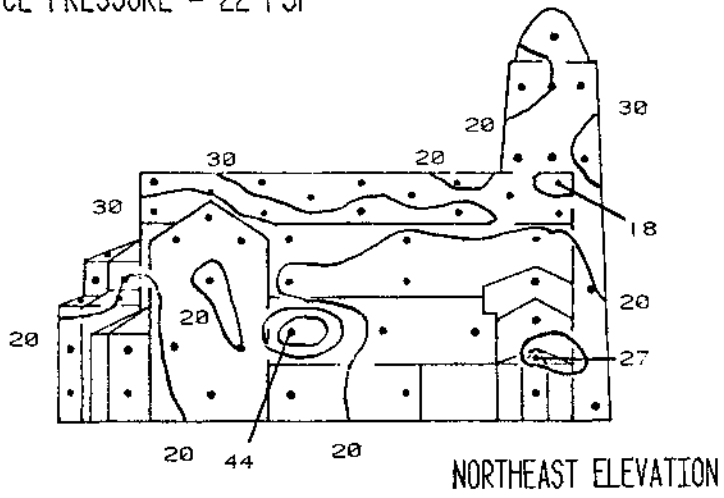

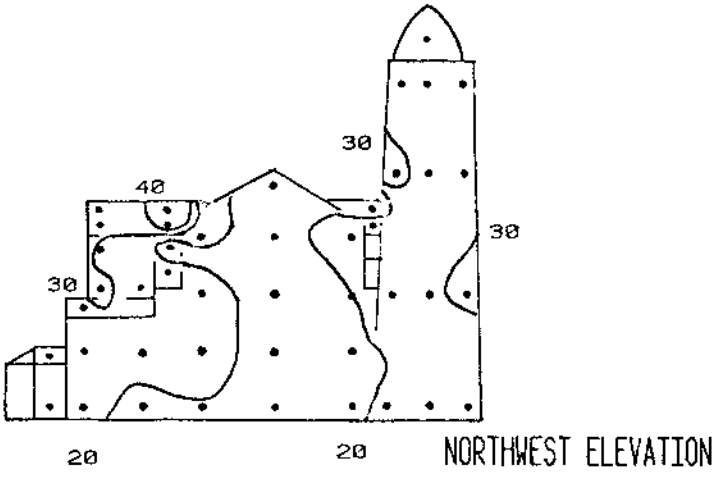

Figure 10i. Peak Pressure Contours on the Building for Cladding Loads

CONFIGURATION A
PEAK NEGATIVE CLADDING LOADS (PSF)
FOR 100-YEAR RECURRENCE WIND
REFERENCE PRESSURE = 22 PSF

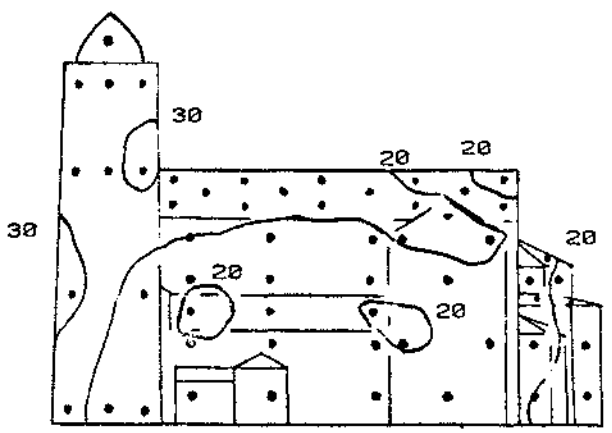

SOUTHWEST ELEVATION

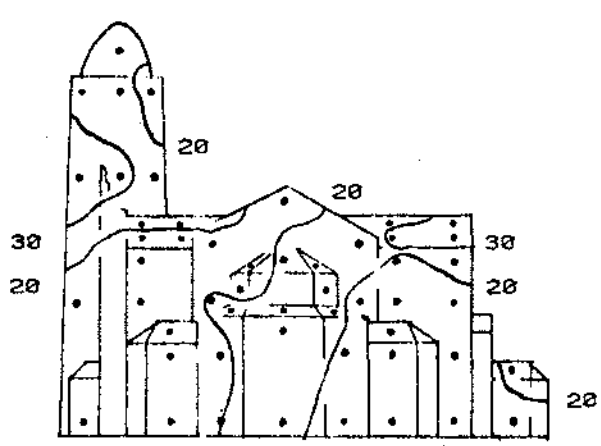

SOUTHEAST ELEVATION

Figure 10j. Peak Pressure Contours on the Building for Cladding Loads

CONFIGURATION A
PEAK POSITIVE CLADDING LOADS (PSF)
FOR 100-YEAR RECURRENCE WIND
REFERENCE PRESSURE = 22 PSF

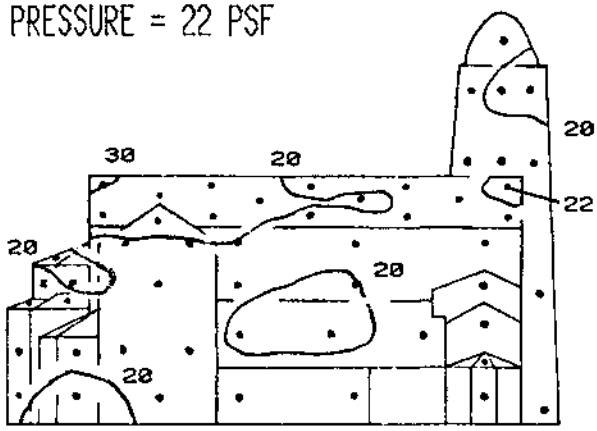

NORTHEAST ELEVATION

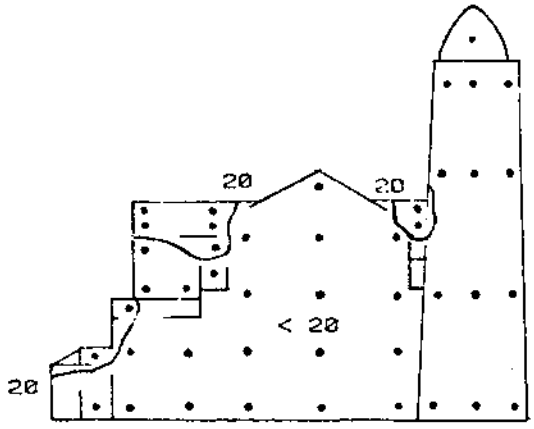

NORTHWEST ELEVATION

Figure 10k. Peak Pressure Contours on the Building for Cladding Loads

CONFIGURATION A
PEAK POSITIVE CLADDING LOADS (PSF)
FOR 100-YEAR RECURRENCE WIND
REFERENCE PRESSURE = 22 PSF

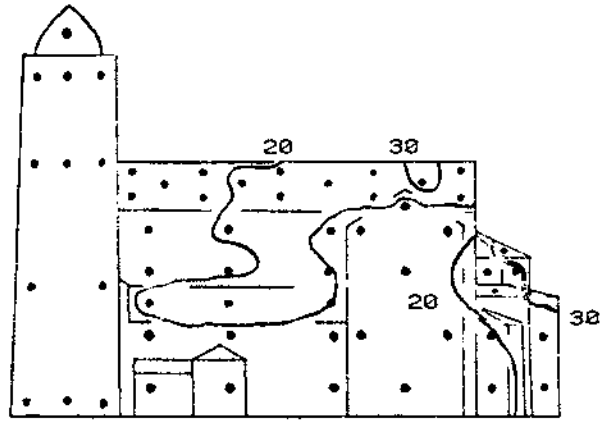

SOUTHWEST ELEVATION

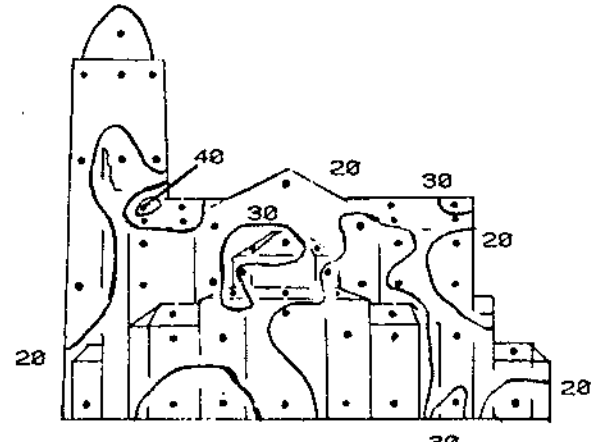

SOUTHEAST ELEVATION

Figure 101. Peak Pressure Contours on the Building for Cladding Loads

CONFIGURATION B
PEAK NEGATIVE CLADDING LOADS (PSF)
FOR 100-YEAR RECURRENCE WIND
REFERENCE PRESSURE = 22 PSF

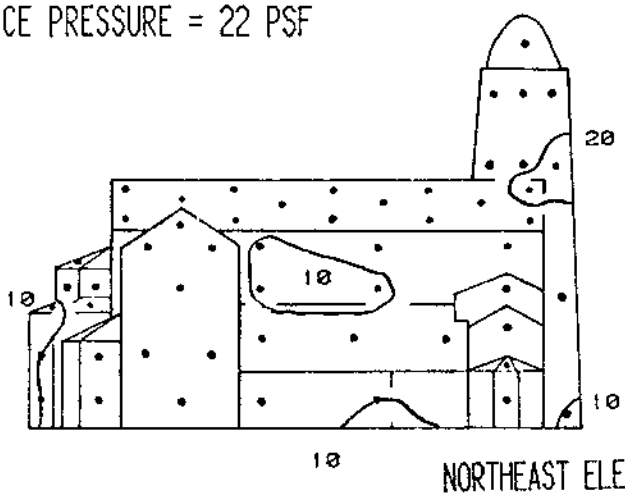

NORTHEAST ELEVATION

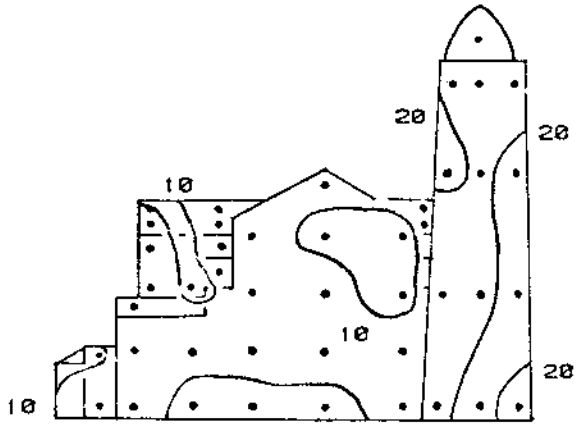

NORTHWEST ELEVATION

Figure 10m. Peak Pressure Contours on the Building for Cladding Loads

CONFIGURATION B
PEAK NEGATIVE CLADDING LOADS (PSF)
FOR 100-YEAR RECURRENCE WIND
REFERENCE PRESSURE = 22 PSF

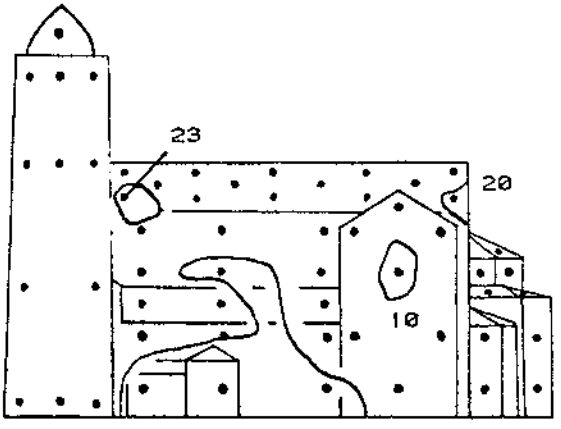

SOUTHWEST ELEVATION

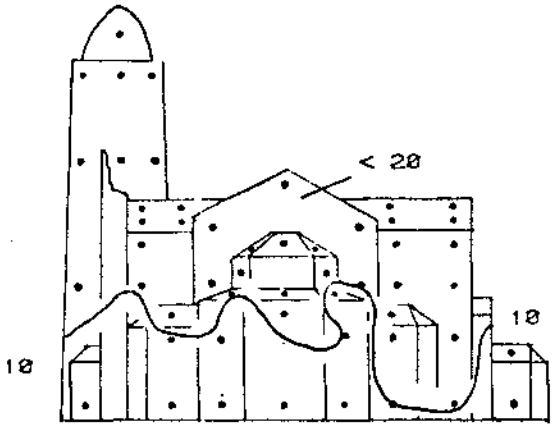

SOUTHEAST ELEVATION

Figure 10n. Peak Pressure Contours on the Building for Cladding Loads

CONFIGURATION B
PEAK POSITIVE CLADDING LOADS (PSF)
FOR 100-YEAR RECURRENCE WIND
REFERENCE PRESSURE = 22 PSF

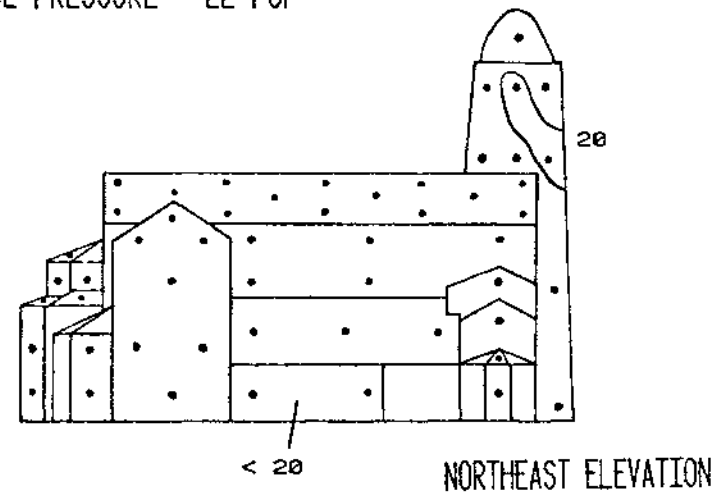

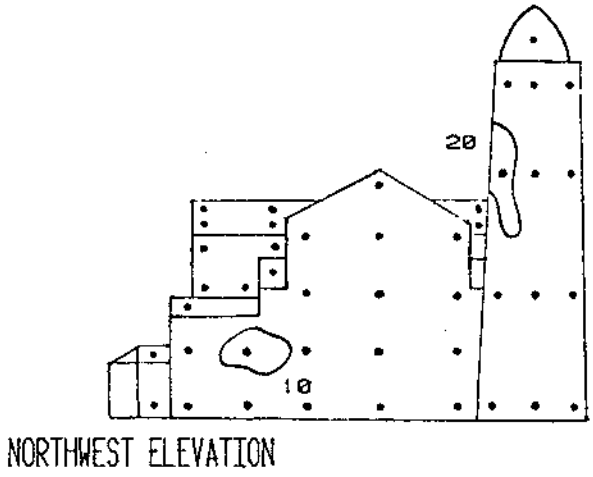

Figure 10o. Peak Pressure Contours on the Building for Cladding Loads

CONFIGURATION B
PEAK POSITIVE CLADDING LOADS (PSF)
FOR 100-YEAR RECURRENCE WIND
REFERENCE PRESSURE = 22 PSF

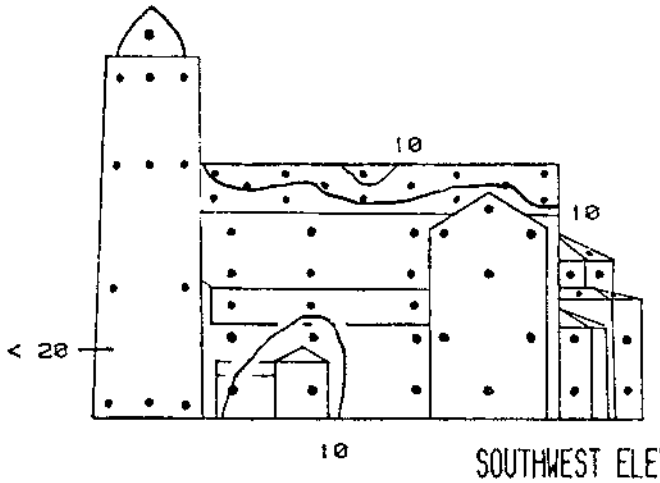

SOUTHWEST ELEVATION

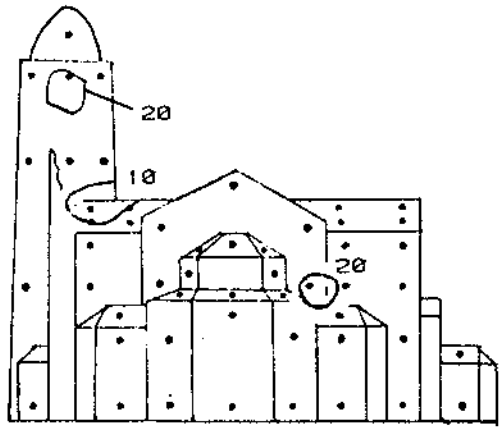

SOUTHEAST ELEVATION

Figure 10p. Peak Pressure Contours on the Building for Cladding Loads

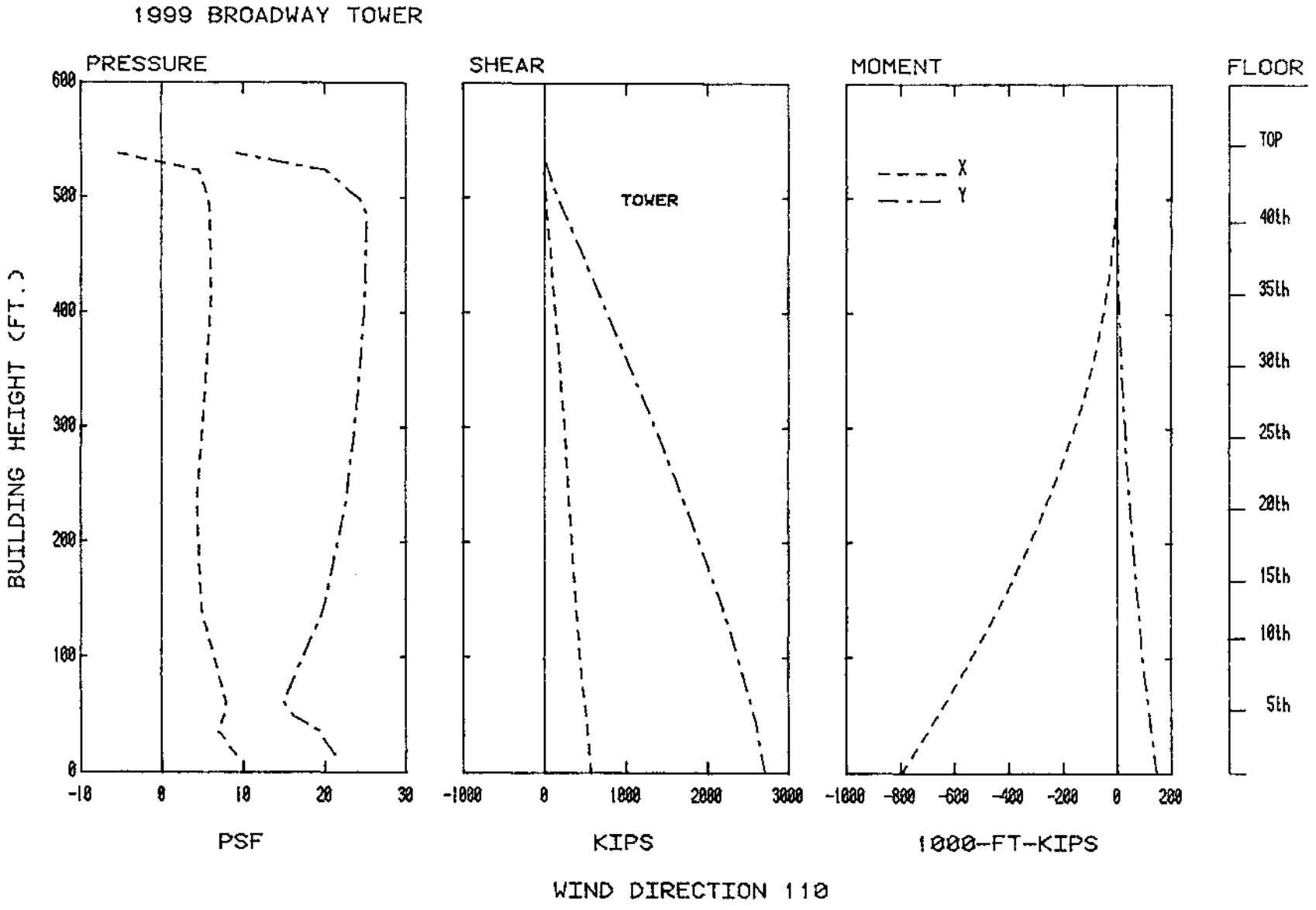

Figure 11. Load, Shear, and Moment Diagrams for Selected Wind Directions

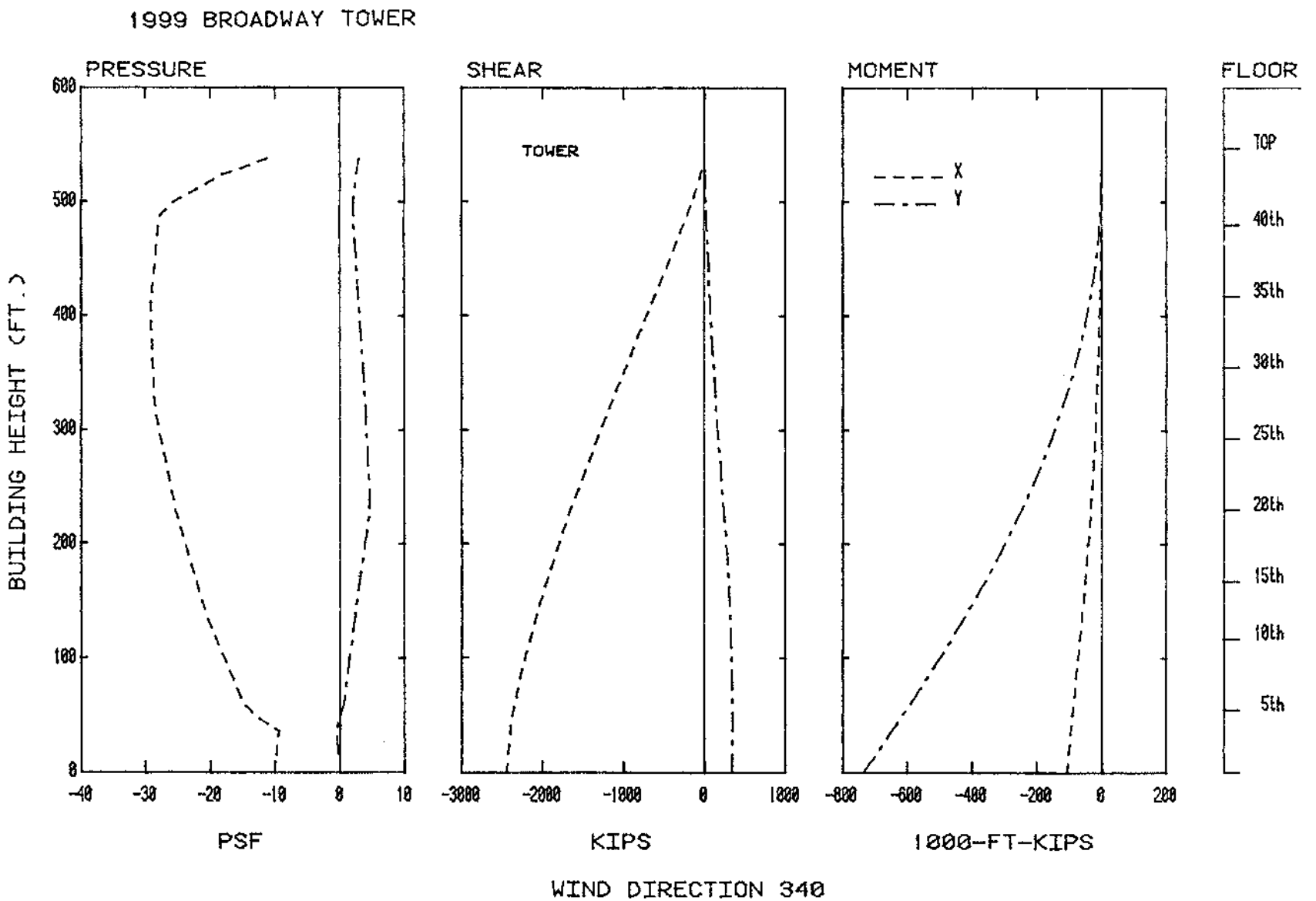

Figure 11. Load, Shear, and Moment Diagrams for Selected Wind Directions

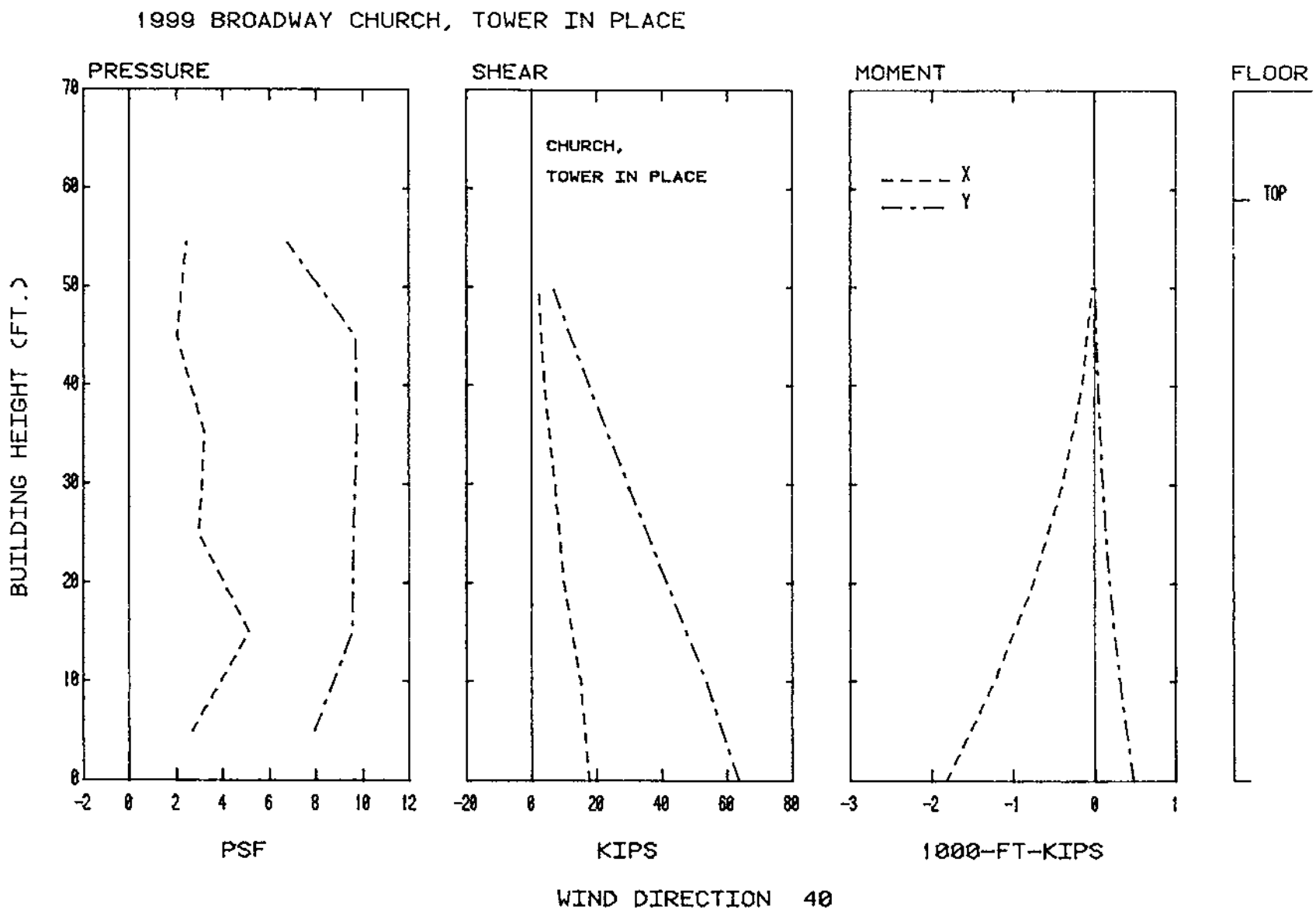

Figure 11. Load, Shear, and Moment Diagrams for Selected Wind Directions

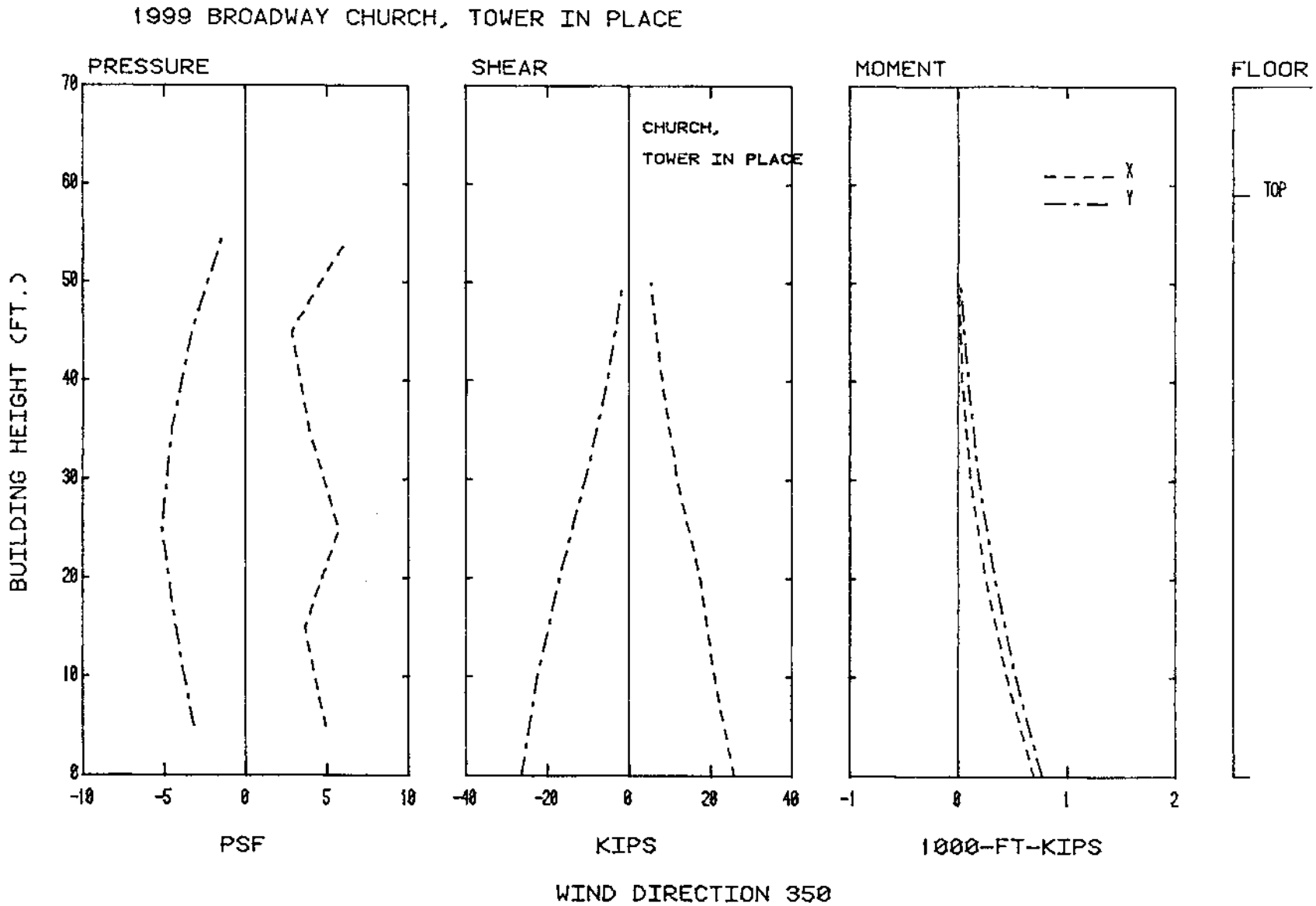

Figure 11. Load, Shear, and Moment Diagrams for Selected Wind Directions

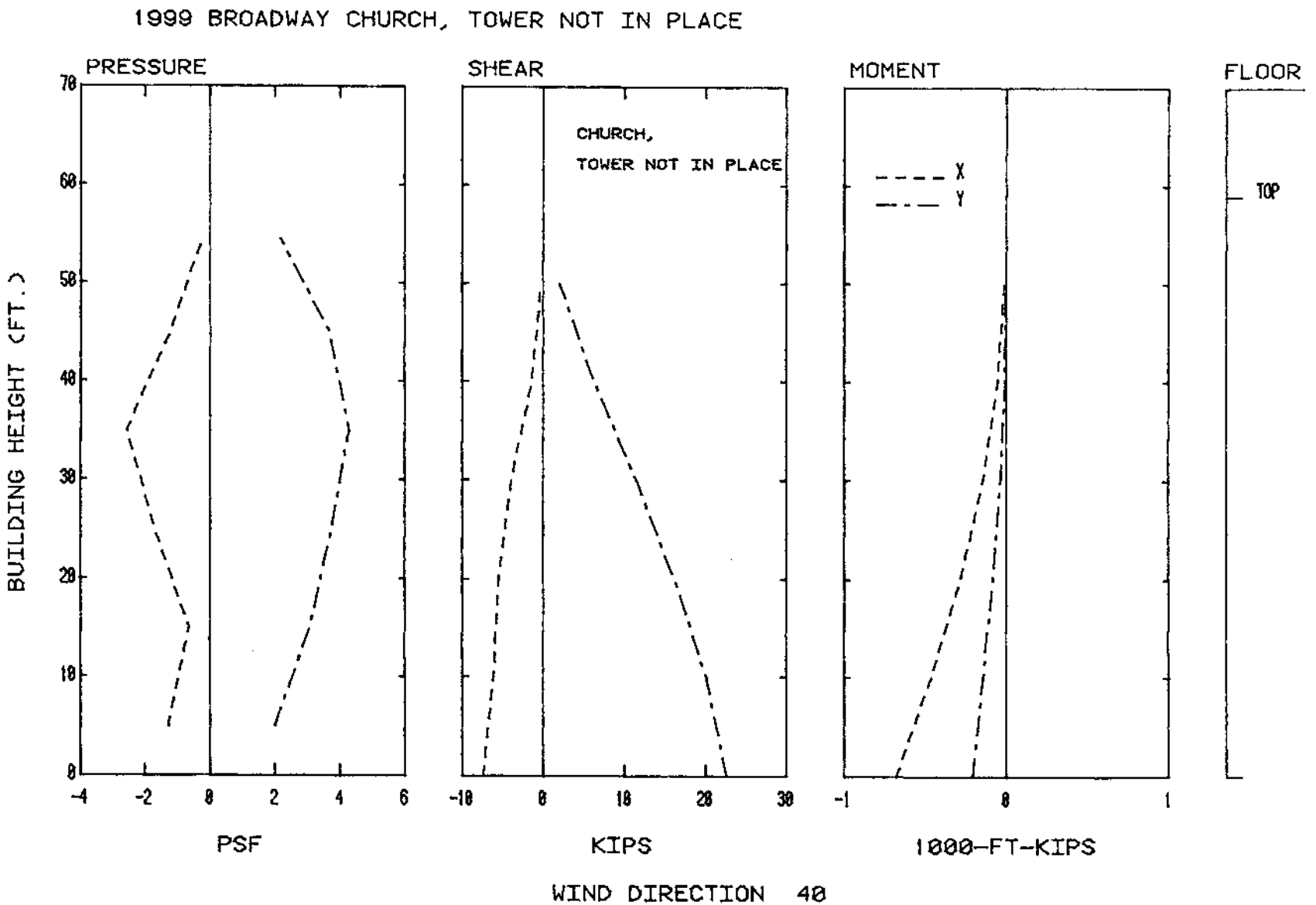

Figure 11. Load, Shear and Moment Diagrams for Selected Wind Directions

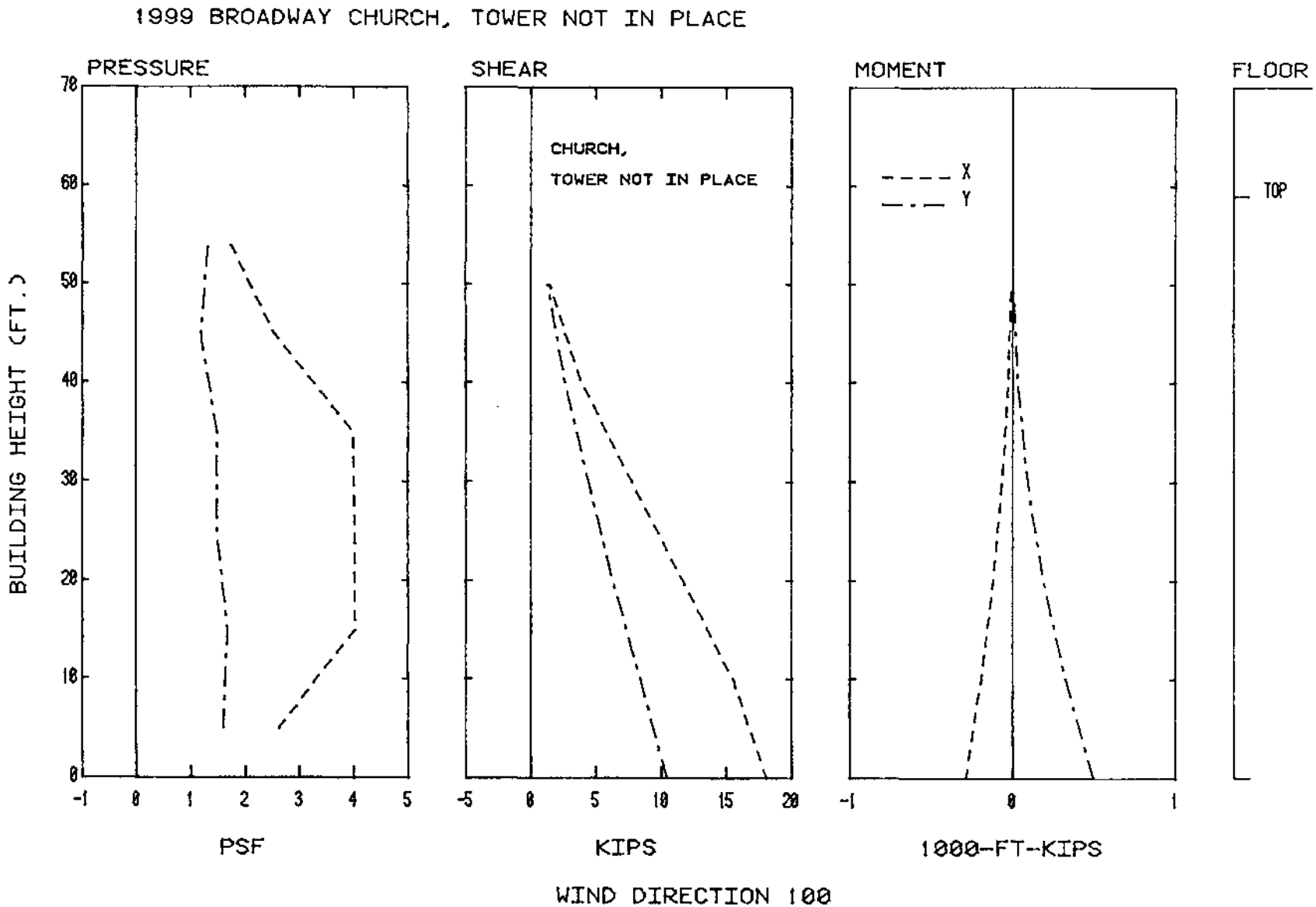

Figure 11. Load, Shear, and Moment Diagrams for Selected Wind Directions

TABLES

TABLE 1

MOTION PICTURE SCENE GUIDE

1. Introduction
2. Purposes for model testing
3. Procedures for conducting tests
4. Specific flow visualization scenes for

1999 BROADWAY, DENVER

HIGH PRESSURE AREAS

Run	Tap No.	Wind Direction
1	452	340°
2	428	320°
3	309	120°

HIGH PEDESTRIAN WIND VELOCITIES

Run	Pedestrian Location	Wind Direction
4	16	67.5°
5	20	90°

TABLE 2--PEDESTRIAN WIND VELOCITIES AND TURBULENCE INTENSITIES

1999 BROADWAY

LOCATION 1

WIND AZIMUTH	UMEAN/UINF (PERCENT)	URMS/UINF (PERCENT)	UMEAN+3*URMS/UINF (PERCENT)
0.00	38.9	12.6	76.8
22.50	33.2	10.0	63.1
45.00	30.9	7.7	54.0
67.50	34.8	7.5	57.1
90.00	34.5	7.0	55.4
112.50	34.2	8.6	60.2
135.00	26.6	6.6	46.5
157.50	26.8	6.9	47.6
180.00	12.7	3.7	23.8
202.50	22.1	5.5	38.7
225.00	23.6	7.0	44.7
247.50	25.7	6.8	46.1
270.00	46.3	14.9	90.9
292.50	45.5	12.8	84.0
315.00	48.3	13.1	87.5
337.50	46.2	13.7	87.2

LOCATION 2

WIND AZIMUTH	UMEAN/UINF (PERCENT)	URMS/UINF (PERCENT)	UMEAN+3*URMS/UINF (PERCENT)
0.00	39.0	10.8	71.5
22.50	40.7	12.0	76.8
45.00	36.7	10.2	67.3
67.50	44.8	14.0	86.7
90.00	47.7	14.1	90.0
112.50	44.5	12.7	82.6
135.00	37.2	9.7	66.4
157.50	29.2	8.7	55.2
180.00	37.2	9.4	65.5
202.50	41.1	11.0	74.0
225.00	45.3	10.1	75.7
247.50	49.5	12.3	86.4
270.00	45.6	10.8	78.0
292.50	45.2	11.0	78.4
315.00	32.0	9.2	59.5
337.50	30.8	8.3	55.8

LOCATION 3

WIND AZIMUTH	UMEAN/UINF (PERCENT)	URMS/UINF (PERCENT)	UMEAN+3*URMS/UINF (PERCENT)
0.00	35.8	8.1	60.0
22.50	37.7	9.1	64.9
45.00	42.6	9.8	72.0
67.50	33.8	8.6	59.5
90.00	28.9	8.1	53.3
112.50	29.1	8.9	55.9
135.00	29.2	7.9	52.9
157.50	35.0	10.5	66.4
180.00	26.9	7.2	48.7
202.50	30.6	8.5	56.1
225.00	28.0	6.5	47.7
247.50	22.7	5.2	38.3
270.00	30.8	8.1	55.0
292.50	32.6	8.8	59.1
315.00	34.7	9.1	62.1
337.50	42.8	12.2	79.5

LOCATION 4

WIND AZIMUTH	UMEAN/UINF (PERCENT)	URMS/UINF (PERCENT)	UMEAN+3*URMS/UINF (PERCENT)
0.00	35.0	9.7	64.0
22.50	28.6	8.4	53.6
45.00	28.5	8.5	53.9
67.50	24.9	6.3	43.8
90.00	26.1	6.4	45.4
112.50	26.8	6.8	47.3
135.00	23.8	5.6	40.7
157.50	30.2	8.5	55.8
180.00	18.2	3.9	29.9
202.50	22.6	5.9	49.3
225.00	23.8	6.2	42.4
247.50	22.5	6.2	41.3
270.00	33.6	11.6	68.3
292.50	32.0	9.0	58.9
315.00	32.5	7.3	54.5
337.50	40.1	9.2	67.6

TABLE 2--PEDESTRIAN WIND VELOCITIES AND TURBULENCE INTENSITIES

1999 BROADWAY

LOCATION 5

WIND AZIMUTH	UMEAN/UINF (PERCENT)	URMS/UINF (PERCENT)	UMEAN+3*URMS/UINF (PERCENT)
0.00	28.1	9.2	55.7
22.50	28.9	9.8	58.4
45.00	30.8	8.4	56.1
67.50	23.6	6.9	44.2
90.00	20.5	4.8	34.9
112.50	21.8	5.4	38.0
135.00	23.2	5.8	40.5
157.50	29.8	8.9	56.5
180.00	19.0	3.7	30.0
202.50	25.9	5.8	43.2
225.00	22.8	5.8	40.2
247.50	23.6	6.5	43.1
270.00	27.1	8.9	53.8
292.50	29.3	10.3	60.1
315.00	24.3	6.2	43.0
337.50	25.5	6.8	45.8

LOCATION 6

WIND AZIMUTH	UMEAN/UINF (PERCENT)	URMS/UINF (PERCENT)	UMEAN+3*URMS/UINF (PERCENT)
0.00	25.3	7.1	46.6
22.50	24.1	6.4	43.4
45.00	28.9	7.5	51.3
67.50	26.8	7.9	50.3
90.00	23.9	6.6	43.6
112.50	24.0	6.6	43.8
135.00	20.4	4.9	35.3
157.50	23.2	6.0	41.0
180.00	17.6	3.7	28.6
202.50	19.8	5.0	34.7
225.00	22.8	6.5	42.1
247.50	23.1	6.2	41.6
270.00	28.4	8.2	53.1
292.50	29.4	7.7	52.5
315.00	30.1	7.0	51.0
337.50	32.8	9.2	60.5

LOCATION 7

WIND AZIMUTH	UMEAN/UINF (PERCENT)	URMS/UINF (PERCENT)	UMEAN+3*URMS/UINF (PERCENT)
0.00	34.5	12.1	70.8
22.50	35.5	10.7	67.5
45.00	46.6	12.8	85.0
67.50	52.1	10.8	84.5
90.00	46.5	11.1	79.9
112.50	31.6	8.4	56.9
135.00	36.3	13.2	75.8
157.50	21.6	6.3	40.6
180.00	19.2	5.0	34.3
202.50	15.7	2.4	22.9
225.00	19.2	3.6	30.0
247.50	22.2	5.3	38.1
270.00	24.3	6.3	43.1
292.50	24.3	6.5	43.9
315.00	20.8	4.8	35.2
337.50	27.3	8.5	52.8

LOCATION 8

WIND AZIMUTH	UMEAN/UINF (PERCENT)	URMS/UINF (PERCENT)	UMEAN+3*URMS/UINF (PERCENT)
0.00	32.8	9.4	61.0
22.50	36.5	11.3	70.3
45.00	30.3	8.9	56.9
67.50	30.5	8.0	54.5
90.00	34.6	9.0	61.7
112.50	40.3	10.3	71.3
135.00	39.1	10.5	70.5
157.50	43.0	12.1	79.4
180.00	26.2	6.7	46.4
202.50	27.8	6.8	48.2
225.00	23.5	4.6	37.3
247.50	27.0	6.0	44.9
270.00	33.7	9.2	61.2
292.50	38.7	10.9	71.3
315.00	39.3	9.8	68.8
337.50	34.5	9.2	62.0

TABLE 2--PEDESTRIAN WIND VELOCITIES AND TURBULENCE INTENSITIES

1999 BROADWAY

LOCATION 9

WIND AZIMUTH	UMEAN/UINF (PERCENT)	URMS/UINF (PERCENT)	UMEAN+3*URMS/UINF (PERCENT)
0.00	24.2	6.0	42.4
22.50	39.8	10.8	72.3
45.00	49.2	15.4	95.5
67.50	62.3	11.4	96.5
90.00	62.6	10.8	95.0
112.50	58.6	10.3	89.5
135.00	25.0	7.6	47.8
157.50	27.8	7.3	49.7
180.00	24.7	5.0	39.7
202.50	42.4	6.5	62.0
225.00	35.4	6.6	55.2
247.50	37.4	7.2	59.1
270.00	38.4	7.2	59.9
292.50	48.5	9.2	75.9
315.00	37.4	9.6	66.2
337.50	29.3	8.0	53.4

LOCATION 10

WIND AZIMUTH	UMEAN/UINF (PERCENT)	URMS/UINF (PERCENT)	UMEAN+3*URMS/UINF (PERCENT)
0.00	32.4	11.3	66.4
22.50	33.1	10.1	63.4
45.00	34.2	11.4	68.5
67.50	35.2	15.0	80.2
90.00	27.8	12.1	64.1
112.50	29.4	13.0	68.5
135.00	23.5	8.3	48.6
157.50	53.1	14.6	97.0
180.00	27.0	7.3	49.0
202.50	41.0	9.4	69.1
225.00	26.9	9.6	55.8
247.50	18.9	7.0	39.8
270.00	21.5	8.3	46.5
292.50	23.6	8.0	47.6
315.00	29.0	10.4	60.4
337.50	35.7	11.6	70.6

LOCATION 11

WIND AZIMUTH	UMEAN/UINF (PERCENT)	URMS/UINF (PERCENT)	UMEAN+3*URMS/UINF (PERCENT)
0.00	30.9	10.3	61.6
22.50	37.7	10.5	69.3
45.00	43.7	8.9	70.4
67.50	41.5	11.4	75.7
90.00	30.4	10.2	61.1
112.50	30.5	9.4	58.8
135.00	27.6	8.3	52.5
157.50	44.8	13.9	86.6
180.00	30.4	6.7	50.6
202.50	43.8	8.6	69.6
225.00	33.9	7.4	56.2
247.50	28.4	7.0	49.6
270.00	27.7	8.5	53.3
292.50	27.0	8.1	51.3
315.00	26.8	7.8	50.1
337.50	31.4	10.1	61.8

LOCATION 12

WIND AZIMUTH	UMEAN/UINF (PERCENT)	URMS/UINF (PERCENT)	UMEAN+3*URMS/UINF (PERCENT)
0.00	20.3	5.3	36.1
22.50	25.3	8.1	49.7
45.00	34.2	7.9	57.9
67.50	34.1	8.3	58.9
90.00	25.6	8.8	51.9
112.50	24.6	8.3	49.5
135.00	23.1	7.0	44.2
157.50	28.3	10.5	59.6
180.00	20.5	5.5	37.1
202.50	28.8	9.2	56.3
225.00	20.5	4.2	33.1
247.50	24.3	6.7	44.5
270.00	31.7	9.0	58.7
292.50	27.8	6.7	47.8
315.00	25.0	6.2	43.6
337.50	23.8	6.1	42.1

TABLE 2--PEDESTRIAN WIND VELOCITIES AND TURBULENCE INTENSITIES

1999 BROADWAY

LOCATION 13

WIND AZIMUTH	UMEAN/UINF (PERCENT)	URMS/UINF (PERCENT)	UMEAN+3*URMS/UINF (PERCENT)
0.00	24.7	6.7	44.7
22.50	30.7	9.0	57.6
45.00	43.8	9.2	71.5
67.50	54.4	10.2	85.0
90.00	52.1	13.8	93.7
112.50	37.7	15.7	84.8
135.00	30.2	11.2	63.9
157.50	37.3	11.5	71.9
180.00	21.2	5.5	37.8
202.50	42.5	13.2	82.0
225.00	21.4	5.3	37.4
247.50	30.9	7.8	54.3
270.00	38.2	10.2	68.8
292.50	39.4	10.0	69.4
315.00	35.2	8.9	61.9
337.50	32.0	9.4	60.2

LOCATION 14

WIND AZIMUTH	UMEAN/UINF (PERCENT)	URMS/UINF (PERCENT)	UMEAN+3*URMS/UINF (PERCENT)
0.00	29.7	9.1	57.0
22.50	24.4	7.9	48.1
45.00	39.9	12.5	77.3
67.50	47.6	12.2	84.3
90.00	53.2	12.9	92.0
112.50	64.6	16.4	113.7
135.00	50.7	15.8	98.0
157.50	37.6	12.4	74.7
180.00	16.8	5.1	32.2
202.50	16.1	5.9	33.9
225.00	14.8	4.4	28.1
247.50	16.4	4.8	30.7
270.00	16.0	4.8	30.3
292.50	33.5	9.7	62.7
315.00	34.6	10.5	66.1
337.50	38.9	11.5	73.5

LOCATION 15

WIND AZIMUTH	UMEAN/UINF (PERCENT)	URMS/UINF (PERCENT)	UMEAN+3*URMS/UINF (PERCENT)
0.00	41.1	10.8	73.4
22.50	30.3	9.8	59.6
45.00	25.0	10.0	55.0
67.50	53.6	13.0	92.4
90.00	60.3	12.8	98.7
112.50	69.6	13.3	109.6
135.00	55.1	14.0	97.0
157.50	41.0	10.4	72.4
180.00	15.7	5.4	32.0
202.50	16.4	5.2	32.0
225.00	14.7	4.0	26.9
247.50	16.2	4.3	29.0
270.00	18.0	5.1	33.4
292.50	40.9	12.3	77.9
315.00	43.3	13.1	82.7
337.50	48.8	15.0	93.8

LOCATION 16

WIND AZIMUTH	UMEAN/UINF (PERCENT)	URMS/UINF (PERCENT)	UMEAN+3*URMS/UINF (PERCENT)
0.00	42.4	10.5	73.9
22.50	32.4	9.7	61.6
45.00	58.9	15.6	105.7
67.50	79.9	16.1	128.2
90.00	74.8	20.8	137.2
112.50	59.5	26.1	137.8
135.00	49.2	18.9	105.9
157.50	19.4	3.5	30.0
180.00	20.2	4.3	33.1
202.50	23.6	6.5	43.2
225.00	19.5	4.0	31.5
247.50	20.5	4.5	33.9
270.00	28.3	6.0	46.2
292.50	41.2	8.8	67.6
315.00	46.5	9.7	75.6
337.50	54.5	10.9	87.2

TABLE 2--PEDESTRIAN WIND VELOCITIES AND TURBULENCE INTENSITIES

1999 BROADWAY

LOCATION 17

WIND AZIMUTH	UMEAN/UINF (PERCENT)	URMS/UINF (PERCENT)	UMEAN+3*URMS/UINF (PERCENT)
0.00	56.7	10.9	89.5
22.50	37.8	10.9	70.5
45.00	36.3	12.4	73.5
67.50	67.3	15.6	114.1
90.00	71.6	19.5	129.9
112.50	51.6	27.0	132.5
135.00	43.7	20.9	106.3
157.50	18.5	4.0	30.4
180.00	18.7	3.9	30.3
202.50	18.5	4.1	30.9
225.00	18.3	3.6	29.1
247.50	16.4	2.7	24.7
270.00	18.3	4.2	30.9
292.50	46.7	9.5	75.2
315.00	53.8	10.6	85.6
337.50	63.4	11.0	96.3

LOCATION 18

WIND AZIMUTH	UMEAN/UINF (PERCENT)	URMS/UINF (PERCENT)	UMEAN+3*URMS/UINF (PERCENT)
0.00	17.7	7.0	38.6
22.50	17.9	5.9	35.5
45.00	22.9	7.6	45.6
67.50	22.3	7.0	43.3
90.00	22.5	7.5	45.0
112.50	25.5	8.4	50.6
135.00	23.9	7.7	47.0
157.50	23.4	8.9	50.1
180.00	13.7	4.5	27.2
202.50	19.5	7.4	41.8
225.00	14.9	4.8	29.5
247.50	12.3	3.1	21.7
270.00	12.7	3.4	22.8
292.50	19.4	7.8	42.6
315.00	19.3	7.1	40.6
337.50	16.7	6.2	35.4

LOCATION 19

WIND AZIMUTH	UMEAN/UINF (PERCENT)	URMS/UINF (PERCENT)	UMEAN+3*URMS/UINF (PERCENT)
0.00	17.3	5.6	34.2
22.50	23.6	9.3	51.5
45.00	43.0	12.3	80.0
67.50	36.6	9.5	64.9
90.00	30.7	9.8	60.0
112.50	24.1	8.0	48.2
135.00	19.2	6.5	38.9
157.50	29.3	13.2	68.8
180.00	14.5	4.8	28.9
202.50	18.7	7.2	40.3
225.00	13.4	3.7	24.5
247.50	10.5	2.1	16.8
270.00	10.7	2.3	17.6
292.50	15.9	6.4	35.1
315.00	20.6	8.5	46.2
337.50	20.0	8.0	44.2

LOCATION 20

WIND AZIMUTH	UMEAN/UINF (PERCENT)	URMS/UINF (PERCENT)	UMEAN+3*URMS/UINF (PERCENT)
0.00	26.8	6.4	46.0
22.50	35.4	13.8	76.8
45.00	29.2	7.0	50.3
67.50	49.9	19.6	108.5
90.00	70.2	16.7	120.2
112.50	63.0	13.6	104.0
135.00	37.8	16.3	86.6
157.50	33.5	10.5	65.1
180.00	29.3	8.2	54.0
202.50	54.9	11.8	90.3
225.00	40.6	12.6	78.3
247.50	21.5	6.0	39.6
270.00	22.8	6.3	41.7
292.50	27.0	9.1	54.4
315.00	29.9	9.7	59.0
337.50	26.1	7.3	48.1

TABLE 2--PEDESTRIAN WIND VELOCITIES AND TURBULENCE INTENSITIES

1999 BROADWAY

LOCATION 21

WIND AZIMUTH	UMEAN/UINF (PERCENT)	URMS/UINF (PERCENT)	UMEAN+3*URMS/UINF (PERCENT)
0.00	29.4	9.2	56.9
22.50	30.7	9.5	59.3
45.00	37.7	10.4	68.8
67.50	41.9	15.0	87.0
90.00	58.6	24.2	131.1
112.50	58.2	22.1	124.5
135.00	28.5	9.2	56.1
157.50	28.8	8.1	53.0
180.00	28.5	8.2	53.0
202.50	45.6	11.1	78.9
225.00	33.0	9.3	60.7
247.50	24.8	6.4	44.1
270.00	26.1	6.5	45.5
292.50	30.4	8.9	57.0
315.00	27.4	7.0	48.5
337.50	29.3	10.0	59.5

LOCATION 22

WIND AZIMUTH	UMEAN/UINF (PERCENT)	URMS/UINF (PERCENT)	UMEAN+3*URMS/UINF (PERCENT)
0.00	27.3	11.7	62.3
22.50	33.0	11.6	67.9
45.00	22.3	8.7	48.5
67.50	21.3	9.0	48.3
90.00	18.2	7.2	39.9
112.50	16.9	5.9	34.5
135.00	16.2	4.6	30.0
157.50	22.5	8.3	47.5
180.00	13.5	4.4	26.8
202.50	17.6	6.1	36.0
225.00	17.3	5.4	33.5
247.50	20.4	6.2	39.0
270.00	21.5	7.0	42.5
292.50	27.9	8.2	52.5
315.00	24.2	10.6	55.8
337.50	22.7	8.9	49.4

LOCATION 23

WIND AZIMUTH	UMEAN/UINF (PERCENT)	URMS/UINF (PERCENT)	UMEAN+3*URMS/UINF (PERCENT)
0.00	14.8	4.5	28.3
22.50	16.4	4.9	31.2
45.00	14.0	5.0	28.9
67.50	18.4	7.8	41.8
90.00	21.5	8.7	47.7
112.50	20.9	7.9	44.7
135.00	22.1	5.1	37.5
157.50	27.6	7.3	49.6
180.00	12.5	3.8	23.8
202.50	16.8	4.9	31.6
225.00	14.0	4.3	26.9
247.50	12.5	3.3	22.3
270.00	12.8	3.8	24.3
292.50	17.2	6.8	37.7
315.00	16.5	5.4	32.6
337.50	16.8	5.0	31.9

LOCATION 24

WIND AZIMUTH	UMEAN/UINF (PERCENT)	URMS/UINF (PERCENT)	UMEAN+3*URMS/UINF (PERCENT)
0.00	43.5	11.4	77.7
22.50	41.5	8.8	67.8
45.00	46.7	10.9	79.5
67.50	43.2	12.7	81.2
90.00	32.7	10.9	65.3
112.50	35.8	9.9	65.5
135.00	33.6	8.7	59.7
157.50	23.8	8.3	48.7
180.00	26.0	6.8	46.3
202.50	44.4	9.8	73.7
225.00	35.7	7.1	56.9
247.50	35.5	5.9	53.3
270.00	31.0	7.2	52.7
292.50	27.9	8.4	53.2
315.00	33.2	11.3	67.1
337.50	42.0	10.7	74.2

TABLE 2--PEDESTRIAN WIND VELOCITIES AND TURBULENCE INTENSITIES

1999 BROADWAY

LOCATION 25

WIND AZIMUTH	UMEAN/UINF (PERCENT)	URMS/UINF (PERCENT)	UMEAN+3*URMS/UINF (PERCENT)
0.00	57.9	13.1	97.3
22.50	55.3	11.2	89.0
45.00	45.6	8.6	71.4
67.50	38.9	10.4	70.1
90.00	33.3	11.0	66.4
112.50	32.9	10.5	64.2
135.00	29.5	7.6	52.3
157.50	21.7	6.3	40.6
180.00	30.5	8.3	55.5
202.50	53.9	15.6	100.8
225.00	44.6	10.7	76.9
247.50	38.8	8.1	63.1
270.00	32.4	8.7	58.6
292.50	32.6	9.2	60.3
315.00	47.1	13.8	88.5
337.50	59.6	13.4	99.8

LOCATION 26

WIND AZIMUTH	UMEAN/UINF (PERCENT)	URMS/UINF (PERCENT)	UMEAN+3*URMS/UINF (PERCENT)
0.00	39.5	10.6	71.1
22.50	37.0	9.7	66.1
45.00	30.5	7.9	54.2
67.50	22.1	8.6	48.1
90.00	24.9	12.2	61.4
112.50	33.4	12.4	70.6
135.00	30.1	9.9	60.0
157.50	21.9	12.1	58.1
180.00	25.1	6.8	45.5
202.50	41.8	7.7	64.7
225.00	30.9	7.5	53.5
247.50	22.5	5.6	39.2
270.00	18.0	4.9	32.6
292.50	24.2	7.4	46.4
315.00	32.4	9.8	61.8
337.50	39.3	9.9	68.8

LOCATION 27

WIND AZIMUTH	UMEAN/UINF (PERCENT)	URMS/UINF (PERCENT)	UMEAN+3*URMS/UINF (PERCENT)
0.00	32.3	10.1	62.6
22.50	29.7	8.6	55.6
45.00	19.9	7.1	41.3
67.50	18.3	6.7	38.4
90.00	24.8	10.6	56.5
112.50	33.8	10.7	65.8
135.00	30.8	6.7	50.9
157.50	37.7	10.9	70.6
180.00	22.0	5.5	38.4
202.50	32.6	6.9	53.3
225.00	24.8	6.4	44.1
247.50	19.2	5.5	35.7
270.00	15.7	4.6	29.4
292.50	21.1	6.2	39.6
315.00	27.7	8.6	53.6
337.50	33.9	8.9	60.4

TABLE 2--PEDESTRIAN WIND VELOCITIES AND TURBULENCE INTENSITIES

1999 BROADWAY

* * GREATEST VALUES * *

UMEAN/UINF (PERCENT)

LOC	AZ	MEAN	RMS	M+3RMS
16	67.5	79.9	16.1	128.2
16	90.0	74.8	20.8	137.2
17	90.0	71.6	19.5	129.9
20	90.0	70.2	16.7	120.2
15	112.5	69.6	13.3	109.6
17	67.5	67.3	15.6	114.1
14	112.5	64.6	16.4	113.7
17	337.5	63.4	11.0	96.3
20	112.5	63.0	13.6	104.0
9	90.0	62.6	10.8	95.0

URMS/UINF (PERCENT)

LOC	AZ	MEAN	RMS	M+3RMS
17	112.5	51.6	27.0	132.5
16	112.5	59.5	26.1	137.8
21	90.0	58.6	24.2	131.1
21	112.5	58.2	22.1	124.5
17	135.0	43.7	20.9	106.3
16	90.0	74.8	20.8	137.2
20	67.5	49.9	19.6	108.5
17	90.0	71.6	19.5	129.9
16	135.0	49.2	18.9	105.9
20	90.0	70.2	16.7	120.2

UMEAN+3*RMS/UINF (PERCENT)

LOC	AZ	MEAN	RMS	M+3RMS
16	112.5	59.5	26.1	137.8
16	90.0	74.8	20.8	137.2
17	112.5	51.6	27.0	132.5
21	90.0	58.6	24.2	131.1
17	90.0	71.6	19.5	129.9
16	67.5	79.9	16.1	128.2
21	112.5	58.2	22.1	124.5
20	90.0	70.2	16.7	120.2
17	67.5	67.3	15.6	114.1
14	112.5	64.6	16.4	113.7

TABLE 3

PERCENTAGE FREQUENCY OF WIND DIRECTION AND SPEED

STAPLETON INTERNATIONAL AIRPORT, DENVER (1965-1974)

SEASON : ANNUAL NO. OF OBS.= 29215 HT. OF MEAS.= 20. FT.

VELOCITY LEVELS IN MPH

DIRECTION	0- 3	4- 7	8-12	13-18	19-24	25-31	32 +	TOTAL
N	.60	2.90	3.20	1.60	.30	.10	0.00	8.90
NNE	.40	1.50	1.60	.80	.20	0.00	0.00	4.50
NE	.40	1.60	1.60	.60	.10	0.00	0.00	4.30
ENE	.40	1.50	1.30	.50	0.00	0.00	0.00	3.80
E	.70	2.60	1.90	.50	0.00	0.00	0.00	5.70
ESE	.50	1.90	1.40	.30	0.00	0.00	0.00	4.20
SE	.50	1.80	1.30	.40	0.00	0.00	0.00	4.10
SSE	.50	1.90	1.40	.50	.10	0.00	0.00	4.40
S	1.20	7.20	8.90	2.50	.30	0.00	0.00	20.10
SSW	.70	4.60	4.40	1.00	.10	0.00	0.00	10.80
SW	.70	2.40	1.60	.40	.10	0.00	0.00	5.20
WSW	.40	1.30	.70	.20	.10	0.00	0.00	2.70
W	.20	.80	.90	.80	.30	.10	0.00	3.10
WNW	.20	.70	.90	.90	.40	.10	0.00	3.50
NW	.30	1.40	1.30	.90	.30	.10	0.00	4.20
NNW	.30	1.50	1.40	.70	.10	0.00	0.00	4.00
CALM	6.50	0.00	0.00	0.00	0.00	0.00	0.00	6.50
TOT	14.60	35.80	33.70	12.60	2.60	.60	.10	100.00

TABLE 4

SUMMARY OF WIND EFFECTS ON PEOPLE

	Beaufort number	Speed (mph)	Effects
Calm, light air	0, 1	0- 3	Calm, no noticeable wind
Light breeze	2	4- 7	Wind felt on face
Gentle breeze	3	8-12	Wind extends light flag Hair is disturbed Clothing flaps
Moderate breeze	4	13-18	Raises dust, dry soil and loose paper Hair disarranged
Fresh breeze	5	19-24	Force of wind felt on body Drifting snow becomes airborne Limit of agreeable wind on land
Strong breeze	6	25-31	Umbrellas used with difficulty Hair blown straight Difficult to walk steadily Wind noise on ears unpleasant Windborne snow above head height (blizzard)
Near gale	7	32-38	Inconvenience felt when walking
Gale	8	39-46	Generally impedes progress Great difficulty with balance in gusts
Strong gale	9	47-54	People blown over by gusts

Note: Table from Reference 4, p. 40.

TABLE 5

CALCULATION OF REFERENCE PRESSURE

1. Basic wind speed from extreme value analysis of Denver fastest mile winds*:

   > 100-year fastest mile at 30 ft = 70 mph

   Mean hourly wind speed, 30 ft = $\frac{70}{1.27}$ = 55.1 mph

   Mean hourly gradient wind speed = $55.1 \left(\frac{1000}{30}\right)^{.17}$ = 100.0 mph

   Reference pressure at reference velocity location at

   1250 ft = 0.86 (0.00256) $(100.0)^2$ = <u>22 psf</u>

2. Gust load factors to convert hourly mean integrated load to mean load for various gust durations (see Section 4.4)

Duration (sec)	Gust Load Factor
10-15	$(1.4)^2$ = 1.96
30	$(1.32)^2$ = 1.74
45	$(1.28)^2$ = 1.64

3. Load factor to convert loads from 70 mph fastest mile to 90 mph fastest mile:

   multiply loads for 70 mph by $\left(\frac{90}{70}\right)^2$ = 1.65

---

* Analysis shown on attached drawing. Similar values will appear in the revised ANSI A58.1. Since 70 mph will be the lowest wind permitted in the revised ANSI A58.1, that value is used here.

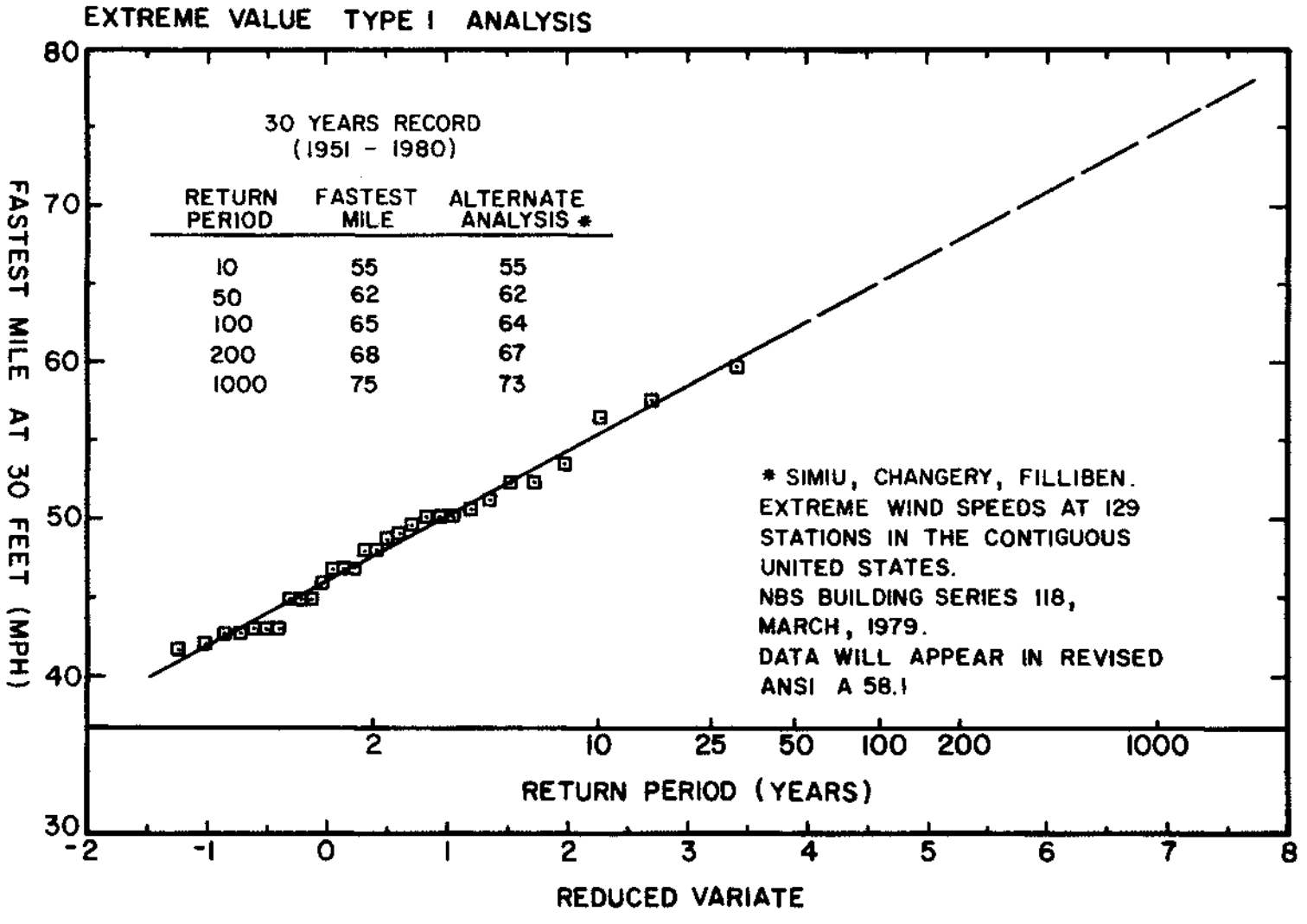

DENVER, COLORADO — STAPLETON INTERNATIONAL AIRPORT

TABLE 6A. PEAK LOADS FOR CONFIGURATION A : 1999 BROADWAY, CHURCH AND TOWER IN PLACE
LARGEST VALUES OF CLADDING LOAD REFERENCE PRESSURE = 22.0 PSF

TAP	AZI-MUTH	PRESS COEFF	NEGATIVE PEAK ---- PSF ----	POSITIVE PEAK ---- PSF ----	TAP	AZI-MUTH	PRESS COEFF	NEGATIVE PEAK ---- PSF ----	POSITIVE PEAK ---- PSF ----	TAP	AZI-MUTH	PRESS COEFF	NEGATIVE PEAK ---- PSF ----	POSITIVE PEAK ---- PSF ----
101	340	-2.00	-44.1	27.0	149	10	1.16	-24.1	25.5	210	0	-2.14	-47.0	26.1
102	60	-1.52	-33.5	25.2	150	10	1.19	-25.1	26.3	211	10	-2.55	-56.2	23.8
103	340	-2.20	-48.5	32.5	151	30	1.30	-26.4	28.6	212	350	-1.79	-39.5	29.4
104	290	1.31	-22.1	28.9	152	90	-1.36	-30.0	26.1	213	350	-1.90	-41.7	28.2
105	230	-1.50	-32.9	27.5	153	80	-1.39	-30.5	25.5	214	110	1.57	-27.8	34.5
106	210	-1.33	-29.2	25.3	154	80	-1.43	-31.5	22.7	215	90	1.49	-27.1	32.9
107	300	1.21	-24.2	26.7	155	80	-1.45	-32.0	25.6	216	70	1.28	-25.6	28.2
108	260	-1.23	-27.1	23.5	156	60	-1.59	-34.9	24.6	217	0	-1.63	-35.9	28.5
109	290	-1.41	-31.0	21.1	157	70	-1.24	-27.2	22.7	218	10	-2.11	-46.5	30.5
110	60	-1.80	-39.7	25.8	158	340	1.26	-23.8	27.8	219	0	-1.71	-37.6	29.4
111	70	-1.61	-35.4	24.7	159	10	1.09	-21.1	24.0	220	170	-1.93	-42.6	28.5
112	80	-1.43	-31.5	25.9	160	10	1.13	-25.0	25.0	221	170	-1.81	-39.7	29.2
113	70	-1.48	-32.5	26.8	161	30	1.27	-22.2	28.0	222	170	-1.59	-35.1	30.8
114	310	1.44	-22.1	31.7	162	70	-1.27	-28.0	27.1	223	100	1.28	-27.7	28.1
115	290	1.52	-18.8	33.5	163	90	-1.43	-31.5	25.7	224	90	1.43	-31.1	31.6
116	300	1.49	-22.1	32.7	164	80	-2.87	-63.1	18.9	225	10	-1.47	-32.3	28.6
117	300	1.72	-21.0	37.9	165	70	-2.55	-56.2	16.7	226	10	-1.30	-28.6	28.1
118	300	1.91	-18.8	41.9	166	60	-1.31	-28.8	18.6	227	10	-1.39	-30.6	29.6
119	300	1.31	-25.5	28.8	167	80	-1.13	-24.9	18.2	228	170	-1.82	-40.1	25.1
120	20	1.36	-28.2	29.8	168	60	-.93	-20.4	20.3	229	170	-1.99	-43.8	27.0
121	30	1.31	-24.6	28.9	169	350	1.04	-19.0	22.8	230	100	1.37	-27.9	30.2
122	20	1.44	-27.3	31.7	170	10	.84	-17.5	18.5	231	80	1.31	-27.6	28.9
123	350	1.39	-25.5	30.7	171	90	-1.00	-22.0	16.9	232	0	-1.32	-29.1	28.4
124	340	1.31	-25.3	28.9	172	70	-.91	-19.9	16.1	233	0	-1.50	-33.1	32.1
125	300	1.44	-18.3	31.8	173	260	-1.17	-25.7	15.8	234	0	-1.40	-30.9	29.8
126	310	1.39	-17.0	30.5	174	70	-1.10	-24.1	14.0	235	10	-1.31	-28.9	28.2
127	350	1.49	-19.5	32.8	175	80	-1.05	-23.2	14.5	236	160	-1.49	-32.7	24.9
128	350	1.31	-19.7	28.7	176	20	.79	-16.8	17.5	237	170	-1.67	-36.8	26.4
129	350	1.39	-21.3	30.6	177	110	-.81	-17.8	15.4	238	100	1.19	-25.9	26.3
130	10	1.34	-18.7	29.4	178	10	-1.14	-25.0	11.4	239	0	-1.45	-31.9	29.9
131	350	1.29	-26.7	28.5	179	0	-1.09	-23.9	14.4	240	10	-1.43	-31.4	26.8
132	340	1.43	-28.1	31.5	180	100	-1.15	-25.2	13.5	241	350	-1.74	-38.2	28.4
133	350	1.68	-33.7	36.9	181	350	1.06	-17.3	23.3	242	20	-1.85	-40.7	26.1
134	70	-1.42	-31.2	29.0	182	350	1.15	-16.9	25.3	243	340	-1.66	-36.5	25.7
135	290	1.27	-20.6	28.0	183	130	-.87	-19.0	15.2	244	0	-1.78	-39.2	22.7
136	330	1.41	-17.8	30.9	184	90	-1.59	-35.1	17.5	245	160	-1.26	-27.8	22.4
137	10	1.25	-20.7	27.5	185	340	1.33	-15.6	29.2	246	110	1.04	-20.9	22.8
138	350	1.31	-26.0	28.8	186	340	1.39	-16.4	30.6	247	350	-1.15	-25.2	24.5
139	20	1.40	-20.6	30.9	187	120	-.90	-19.8	18.3	248	10	-1.55	-34.1	23.5
140	10	1.35	-25.5	29.6	201	340	-1.59	-35.1	31.4	249	0	-1.83	-40.3	24.2
141	30	1.30	-25.4	28.6	202	60	-1.54	-33.9	12.0	250	350	-2.08	-45.8	21.7
142	40	1.42	-26.0	31.3	203	40	-1.58	-34.8	26.8	251	10	-2.14	-47.2	22.1
143	70	-1.48	-32.6	29.8	204	170	-1.81	-39.8	26.8	252	160	-1.75	-38.5	16.9
144	80	-1.34	-29.4	26.2	205	170	-1.52	-33.4	24.7	253	200	-1.01	-22.3	20.7
145	340	1.27	-24.9	27.8	206	0	-1.18	-26.0	22.9	254	330	-1.28	-28.3	23.7
146	340	1.22	-25.8	26.8	207	340	-1.22	-26.9	21.1	255	330	-1.11	-24.5	20.7
147	320	1.19	-18.6	26.1	208	0	-1.76	-38.8	18.8	256	340	-.89	-19.5	19.5
148	0	1.17	-22.2	25.7	209	10	-2.27	-50.0	21.1	257	0	-1.74	-38.3	18.0

TABLE 6A. PEAK LOADS FOR CONFIGURATION A : 1999 BROADWAY, CHURCH AND TOWER IN PLACE
LARGEST VALUES OF CLADDING LOAD REFERENCE PRESSURE = 22.0 PSF

TAP	AZI-MUTH	PRESS COEFF	NEGATIVE PEAK ---- PSF	POSITIVE PEAK ----	TAP	AZI-MUTH	PRESS COEFF	NEGATIVE PEAK ---- PSF	POSITIVE PEAK ----	TAP	AZI-MUTH	PRESS COEFF	NEGATIVE PEAK ---- PSF	POSITIVE PEAK ----
258	10	-2.42	-53.2	15.8	334	340	-.74	-16.4	11.9	424	330	-1.29	-28.3	21.9
259	0	-2.92	-64.2	19.0	335	80	-1.46	-32.1	29.8	425	140	-1.53	-33.7	21.1
260	330	-1.22	-26.7	16.0	336	90	-1.83	-40.3	25.9	426	140	-1.54	-33.9	22.7
261	340	-1.01	-22.1	17.0	337	100	-1.68	-37.0	27.5	427	110	-1.44	-31.6	22.0
262	330	-1.13	-24.9	20.3	338	130	-2.24	-49.4	18.8	428	320	-3.15	-69.3	18.2
263	90	1.06	-22.9	23.3	339	120	-2.09	-46.0	21.5	429	320	-1.88	-41.4	16.7
264	100	.95	-18.7	20.9	340	330	-1.54	-33.9	16.1	430	310	-1.86	-40.8	17.7
265	50	.87	-18.4	19.2	341	80	-1.64	-36.0	17.5	431	330	-1.51	-33.1	17.3
266	300	-1.12	-24.7	22.7	342	60	-1.81	-39.8	19.6	432	120	-1.51	-33.2	18.9
267	120	1.21	-21.7	26.7	343	330	-1.45	-31.9	15.5	433	130	-1.79	-39.3	19.3
268	110	1.23	-18.7	27.0	344	110	-1.44	-31.7	16.0	434	130	-1.77	-38.9	22.6
269	60	1.17	-24.1	25.8	345	110	-2.43	-53.4	17.4	435	130	-1.56	-34.3	24.4
270	50	1.12	-20.9	24.6	346	160	-1.25	-27.5	14.3	436	320	-2.27	-49.9	17.7
271	70	1.11	-21.9	24.4	347	50	-1.15	-25.2	13.5	437	320	-2.01	-44.1	17.5
272	0	-2.62	-57.7	19.1	348	100	-1.32	-29.0	16.2	438	320	-1.79	-39.4	15.5
301	260	-1.81	-39.9	26.7	349	330	-1.09	-23.9	15.5	439	340	-1.83	-40.3	15.3
302	110	-1.55	-34.2	29.1	350	120	-1.29	-28.4	15.8	440	120	-1.76	-38.6	19.7
303	110	-2.33	-51.3	24.7	351	110	-2.16	-47.5	18.7	441	130	-1.73	-38.1	18.0
304	180	-1.51	-33.2	27.5	352	340	-1.06	-23.2	12.2	442	110	-1.48	-32.5	17.2
305	330	-1.44	-31.6	27.7	353	350	-1.20	-26.3	13.6	443	130	-1.65	-36.3	21.0
306	60	-1.54	-33.9	25.1	354	90	-1.51	-33.2	16.9	444	340	-2.10	-46.1	14.8
307	260	-1.54	-33.8	22.5	355	100	-1.04	-22.8	20.5	445	320	-1.95	-43.0	13.0
308	330	-1.76	-38.8	30.2	356	80	-1.44	-31.6	19.2	446	340	-2.43	-53.4	12.3
309	120	-3.14	-69.0	29.8	357	120	-1.29	-28.3	14.1	447	120	-1.40	-30.8	12.0
310	210	-1.52	-33.5	31.0	358	100	-1.41	-31.0	18.0	448	110	-1.54	-33.8	12.7
311	130	1.34	-29.3	29.5	401	110	-1.69	-37.1	23.9	449	100	-1.56	-34.3	18.2
312	350	-1.50	-33.1	30.4	402	170	-1.63	-35.9	24.1	450	130	-1.83	-40.2	17.6
313	110	-1.96	-43.1	28.7	403	340	-1.93	-42.4	30.0	451	130	-2.00	-44.0	17.9
314	110	-2.28	-50.1	27.7	404	320	-2.39	-52.5	23.2	452	340	-3.18	-70.0	12.2
315	120	-2.24	-49.3	29.2	405	60	-1.93	-42.4	22.8	453	0	-1.85	-40.8	11.1
316	350	-1.50	-33.1	24.8	406	320	-2.03	-44.7	24.0	454	330	-1.75	-38.5	10.3
317	200	-1.39	-30.6	27.0	407	110	-1.73	-38.0	25.6	455	90	-1.05	-23.1	12.8
318	80	-1.55	-34.0	33.3	408	340	-1.56	-34.3	27.9	456	80	-1.45	-32.0	12.9
319	120	-1.66	-36.6	29.1	409	120	-1.99	-43.7	26.4	457	110	-1.61	-35.5	14.8
320	120	-2.43	-53.4	31.1	410	130	-1.80	-39.6	25.4	458	100	-1.73	-38.2	13.6
321	120	-2.21	-48.5	28.4	411	120	-1.97	-43.3	29.0	459	100	-1.73	-38.1	19.6
322	170	-1.29	-28.5	22.7	412	320	-1.64	-36.2	20.7	460	340	-1.14	-25.1	12.5
323	10	-1.47	-32.4	25.4	413	320	-1.78	-39.1	20.9	461	320	-1.08	-23.9	11.2
324	90	-1.86	-41.0	29.3	414	320	-1.65	-36.2	26.0	462	90	-1.49	-32.7	12.5
325	220	-1.34	-29.5	26.0	415	320	-1.28	-28.2	26.0	463	110	-1.04	-22.9	13.5
326	110	-1.98	-43.6	26.3	416	220	1.50	-29.4	33.0	464	90	-1.09	-23.9	13.8
327	120	-2.21	-48.7	28.3	417	120	-1.83	-40.2	29.9	465	110	-1.44	-31.8	15.1
328	10	-1.42	-31.3	23.4	418	120	-1.62	-35.6	25.4	466	320	-.94	-20.6	12.2
329	70	-1.29	-28.4	25.9	419	120	-2.12	-46.6	24.9	467	330	-1.01	-22.3	16.2
330	70	-1.64	-36.1	25.5	420	310	-2.02	-44.4	15.9	468	70	-.98	-21.5	14.3
331	120	-1.60	-35.2	22.6	421	310	-1.80	-39.6	17.8	469	100	-1.31	-28.9	17.1
332	110	-2.17	-47.6	24.7	422	310	-1.66	-36.6	20.6	470	100	-1.11	-24.5	18.6
333	110	-2.06	-45.2	22.5	423	330	-1.40	-30.7	21.1	471	100	-1.25	-27.4	17.9

TABLE 6A. PEAK LOADS FOR CONFIGURATION A : 1999 BROADWAY, CHURCH AND TOWER IN PLACE
LARGEST VALUES OF CLADDING LOAD REFERENCE PRESSURE = 22.0 PSF

TAP	AZI-MUTH	PRESS COEFF	NEGATIVE PEAK ---- PSF ----	POSITIVE PEAK ---- PSF ----	TAP	AZI-MUTH	PRESS COEFF	NEGATIVE PEAK ---- PSF ----	POSITIVE PEAK ---- PSF ----	TAP	AZI-MUTH	PRESS COEFF	NEGATIVE PEAK ---- PSF ----	POSITIVE PEAK ---- PSF ----
472	320	-2.89	-63.7	11.7	614	60	-2.22	-48.8	25.7	913	340	-1.80	-39.6	12.7
501	10	-2.05	-45.1	25.1	615	80	-1.97	-43.3	27.4	914	300	-1.60	-35.1	12.0
502	20	-1.48	-32.5	25.6	616	70	-2.18	-47.9	31.9	915	340	-2.10	-46.2	12.8
503	290	1.47	-27.9	32.3	617	70	-1.73	-38.1	22.9	916	50	-1.92	-42.2	13.7
504	250	-1.74	-38.2	27.5	618	90	-1.94	-42.7	25.5	917	320	-2.23	-49.0	18.6
505	20	-1.74	-38.3	30.1	619	320	-1.79	-39.4	26.6	918	330	-1.82	-40.1	12.0
506	20	-1.59	-34.9	30.2	620	70	-1.93	-42.4	27.4	919	340	-1.85	-40.7	16.8
507	290	1.46	-26.0	32.2	621	70	-1.87	-41.1	22.6	920	200	-1.50	-33.0	13.1
508	290	1.39	-25.4	30.7	622	70	-1.85	-40.7	21.3	921	320	-1.81	-39.9	11.5
509	60	-1.76	-38.8	27.4	623	90	-1.68	-37.0	25.9	1101	70	-1.20	-26.3	17.2
510	20	-1.57	-34.5	27.5	624	70	-2.17	-47.7	21.9	1102	20	1.01	-20.1	22.2
511	260	-1.71	-37.6	27.6	625	70	-2.12	-46.7	16.8	1103	110	-.99	-21.8	18.7
512	290	1.51	-30.7	33.2	626	70	-1.92	-42.2	18.9	1104	110	-1.10	-24.1	20.7
513	30	-1.81	-39.7	27.2	627	60	-1.76	-38.8	17.2	1105	110	-1.00	-22.0	18.3
514	20	-1.72	-37.9	28.0	628	300	-1.43	-31.5	15.9	1106	90	-1.09	-23.9	17.6
515	10	-1.36	-30.0	23.4	629	320	-1.32	-29.1	16.1	1107	100	-1.25	-27.5	19.6
516	70	-1.29	-28.3	25.0	630	90	-1.56	-34.3	13.3	1108	0	.81	-17.3	17.8
517	30	-1.85	-40.8	26.5	631	70	-1.39	-30.5	16.7	1109	50	.79	-16.4	17.4
518	10	-1.85	-40.7	24.3	632	90	-1.40	-30.7	13.5	1110	80	-1.07	-23.5	15.7
519	80	-1.19	-26.1	23.3	633	100	-1.60	-35.3	16.6	1111	70	.93	-19.5	20.5
520	80	-1.31	-28.8	24.9	634	120	-1.53	-33.7	18.2	1112	110	-.85	-18.7	18.3
521	20	-2.11	-46.5	22.3	801	90	-1.44	-31.6	10.6	1113	10	.88	-18.7	19.3
522	40	-1.98	-43.6	21.9	802	340	-1.02	-22.5	13.8	1114	70	.91	-16.9	20.0
523	0	-1.50	-33.0	18.4	803	350	.91	-18.2	19.9	1115	20	.86	-17.9	19.0
524	230	-1.65	-36.3	20.3	804	110	-1.65	-36.4	12.2	1116	100	-.78	-17.2	15.6
525	10	-1.70	-37.3	16.3	805	60	-1.26	-27.7	14.7	1117	120	-.75	-16.4	16.4
526	0	-1.82	-40.1	17.6	806	80	-1.27	-27.9	13.5	1118	80	.85	-13.2	18.6
527	120	-1.69	-37.1	16.5	807	320	-1.34	-29.6	13.2	1119	90	-1.27	-27.9	16.8
528	110	-1.91	-41.9	15.1	808	90	-1.35	-29.7	11.5	1120	300	-.90	-19.7	16.8
529	30	-1.29	-28.3	13.7	809	70	-1.10	-24.2	12.7	1121	50	.82	-14.8	18.0
530	100	-1.15	-25.2	11.9	810	20	-1.45	-31.9	14.9	1122	80	1.23	-15.7	27.1
531	0	-1.51	-33.2	13.9	811	100	-1.14	-25.1	9.4	1123	170	-1.03	-22.7	16.9
532	70	-1.01	-22.2	15.5	812	0	-1.00	-22.0	13.6	1124	140	-1.02	-22.4	17.4
533	120	-.91	-19.9	18.2	813	120	-1.13	-24.8	9.7	1125	20	.85	-12.9	18.6
534	40	-.94	-20.7	18.2	814	110	-1.37	-30.1	12.0	1126	100	-.80	-17.6	12.7
601	70	-2.20	-48.4	29.5	815	100	-1.22	-26.7	9.4	1201	70	-1.04	-22.9	12.2
602	70	-2.13	-46.8	27.5	901	130	-2.18	-48.0	8.6	1202	80	-1.29	-28.3	13.8
603	290	-1.41	-30.9	25.5	902	230	-2.19	-48.2	11.7	1203	70	-1.24	-27.3	18.6
604	310	-2.45	-53.9	31.7	903	120	-1.46	-32.1	10.7	1204	100	-.86	-18.9	15.3
605	70	-1.47	-32.4	27.4	904	130	-1.43	-31.5	12.5	1205	80	-1.62	-35.6	15.2
606	70	-1.66	-36.5	32.4	905	350	-1.61	-35.5	24.9	1206	130	-1.41	-31.0	23.3
607	310	-1.97	-43.4	27.7	906	0	-1.68	-36.9	8.4	1207	210	-.99	-21.7	16.4
608	0	1.69	-32.8	37.3	907	220	-1.85	-40.8	8.6	1208	330	1.06	-17.2	23.3
609	70	-1.83	-40.3	25.1	908	80	-1.15	-25.3	11.4	1209	320	1.00	-17.2	22.0
610	70	-1.67	-36.8	28.4	909	330	-1.43	-31.5	12.4	1210	90	-1.04	-22.8	17.3
611	310	-1.63	-35.8	29.8	910	330	-2.02	-44.4	10.1	1211	0	.93	-16.5	20.6
612	300	-1.92	-42.3	28.4	911	350	-1.70	-37.4	10.4	1212	120	-.79	-17.3	13.5
613	70	-1.79	-39.4	29.4	912	100	-1.26	-27.8	10.4	1213	70	-1.11	-24.3	14.5

TABLE 6A. PEAK LOADS FOR CONFIGURATION A : 1999 BROADWAY, CHURCH AND TOWER IN PLACE
LARGEST VALUES OF CLADDING LOAD REFERENCE PRESSURE = 22.0 PSF

TAP	AZI-MUTH	PRESS COEFF	NEGATIVE PEAK ---- PSF ----	POSITIVE PEAK ---- PSF ----	TAP	AZI-MUTH	PRESS COEFF	NEGATIVE PEAK ---- PSF ----	POSITIVE PEAK ---- PSF ----	TAP	AZI-MUTH	PRESS COEFF	NEGATIVE PEAK ---- PSF ----	POSITIVE PEAK ---- PSF ----
1214	120	-.83	-18.3	16.9	1403	110	-.99	-21.7	18.6	1916	100	-2.18	-48.0	21.6
1215	330	1.10	-17.6	24.1	1404	130	-1.25	-27.5	14.8	1917	90	-1.84	-40.5	21.5
1216	320	1.02	-19.5	22.4	1405	70	-1.46	-32.2	14.7	1918	70	-1.23	-27.0	26.6
1217	90	-.78	-17.1	15.8	1406	80	-1.23	-27.0	16.7	1919	90	-1.65	-36.3	26.9
1218	350	.95	-19.3	20.9	1407	80	-1.06	-23.4	14.5	1920	340	1.17	-25.3	25.7
1219	60	-.78	-17.1	14.5	1408	120	-.82	-18.1	17.3	1921	170	-.94	-20.7	18.3
1220	80	-.95	-20.9	15.9	1409	90	-1.18	-26.0	17.8	1922	130	-1.43	-31.4	18.2
1221	350	1.23	-15.3	27.1	1410	0	.98	-17.8	21.7	1923	90	-1.75	-38.6	19.0
1222	90	-.75	-16.5	14.2	1411	100	-1.06	-23.3	14.6	1924	90	-1.45	-31.8	22.2
1223	80	1.04	-13.1	22.8	1412	170	-.86	-18.9	15.1	1925	90	-1.15	-25.3	25.3
1224	0	1.03	-12.9	22.8	1413	70	-.95	-20.9	13.7	1926	110	-.92	-20.1	17.6
1225	330	1.44	-15.0	31.7	1414	80	-1.40	-30.8	18.3	1927	100	-1.00	-22.0	16.0
1226	350	1.16	-22.9	25.6	1415	90	-1.23	-27.2	19.4	1928	130	-1.19	-26.2	21.9
1227	10	.74	-15.0	16.4	1416	100	-.96	-21.0	13.3	1929	110	-1.15	-25.3	21.3
1228	70	1.41	-12.2	31.0	1417	110	-.82	-18.0	12.5	1930	90	-1.38	-30.4	23.2
1229	70	.79	-15.3	17.3	1418	100	-.92	-20.3	17.2	1931	80	-1.18	-25.9	22.0
1301	170	-1.10	-24.1	15.8	1419	120	-.89	-19.5	15.5	1932	90	-1.23	-27.1	19.9
1302	80	-1.06	-23.2	17.8	1420	110	-.93	-20.5	17.7	1933	10	.99	-18.1	21.8
1303	80	-.97	-21.4	17.4	1421	110	-1.72	-37.9	16.3	1934	300	-.87	-19.2	17.1
1304	40	-1.00	-21.9	12.1	1422	70	-1.30	-28.5	14.6	1935	110	-1.15	-25.3	18.4
1305	70	-.90	-19.9	17.5	1423	110	-1.21	-26.5	13.7	1936	0	1.18	-20.5	25.9
1306	350	.94	-16.6	20.7	1424	80	-.96	-21.1	16.9	1937	80	-1.55	-34.1	29.6
1307	120	-.79	-17.4	17.1	1425	160	-.82	-18.0	15.2	1938	350	1.40	-21.0	30.7
1308	100	-.96	-21.1	13.2	1426	170	-.80	-17.6	15.1	1939	0	1.18	-20.3	25.9
1309	110	-1.04	-22.9	13.2	1427	110	-.98	-21.7	16.4	1940	270	-.95	-21.0	16.9
1311	340	.85	-17.4	18.7	1428	130	-1.08	-23.7	17.9	1941	110	-.85	-18.7	17.1
1312	340	.82	-15.1	18.0	1429	110	-.84	-18.6	15.8	1942	320	.92	-20.0	20.2
1313	320	.91	-17.1	20.1	1430	100	-.93	-20.4	16.6	1943	0	1.20	-19.1	26.4
1314	120	-.78	-17.1	14.0	1431	10	.84	-18.0	18.4	1944	10	1.25	-21.4	27.5
1315	350	1.21	-18.3	26.6	1432	170	-.70	-15.5	14.5	1945	60	-.81	-17.9	14.5
1316	340	1.00	-19.9	21.9	1433	170	-.94	-20.8	18.3	1946	300	.97	-21.1	21.3
1317	60	-.70	-15.3	14.8	1434	80	-1.19	-26.2	13.3	1947	350	1.18	-20.0	26.0
1318	340	.86	-16.6	18.8	1435	170	-1.00	-22.0	13.8	1948	340	1.41	-19.0	30.9
1319	110	-.80	-17.7	14.5	1901	120	-1.21	-26.5	15.1	1949	0	1.45	-18.2	31.8
1320	110	-.94	-20.7	13.9	1902	70	-1.04	-22.9	20.7	1950	340	1.36	-20.7	29.9
1321	60	-.86	-18.9	14.3	1903	20	1.01	-12.7	22.3	1951	130	-1.02	-22.4	15.2
1322	110	-.83	-18.2	15.9	1904	80	-1.32	-28.9	19.8	1952	100	-1.27	-27.9	17.9
1323	340	1.02	-20.8	22.5	1905	20	.88	-18.2	19.4	1953	110	-1.30	-28.6	21.2
1324	160	.87	-14.3	19.2	1906	40	.78	-16.2	17.2	1954	330	1.08	-23.4	23.7
1325	70	-.70	-15.5	14.8	1907	100	-1.47	-32.3	21.4	1955	340	1.32	-17.9	29.0
1326	340	.70	-14.1	15.3	1908	70	-1.38	-30.5	24.6	1956	0	1.22	-16.3	26.9
1327	100	-.75	-16.5	14.5	1909	310	1.46	-31.9	32.1	1957	320	1.11	-22.3	24.4
1328	110	-.89	-19.6	17.9	1910	110	-1.49	-32.7	23.7	1958	0	1.23	-17.2	27.0
1329	340	1.46	-23.5	32.0	1911	0	.81	-13.1	17.8	1959	320	1.69	-23.0	37.1
1330	350	-.86	-19.0	18.2	1912	10	1.01	-18.5	22.3	1960	320	1.39	-18.4	30.7
1331	160	.88	-16.6	19.4	1913	80	-2.01	-44.2	22.9	1961	350	1.42	-22.1	31.1
1401	70	-1.07	-23.4	19.4	1914	110	-1.25	-27.5	15.1	1962	340	1.02	-21.0	22.5
1402	90	-1.13	-25.0	19.8	1915	0	.98	-17.3	21.6	1963	350	1.09	-15.6	24.0

TABLE 6A. PEAK LOADS FOR CONFIGURATION A : 1999 BROADWAY, CHURCH AND TOWER IN PLACE
LARGEST VALUES OF CLADDING LOAD REFERENCE PRESSURE = 22.0 PSF

TAP	AZI-MUTH	PRESS COEFF	NEGATIVE PEAK ---- PSF ----	POSITIVE PEAK ----	TAP	AZI-MUTH	PRESS COEFF	NEGATIVE PEAK ---- PSF ----	POSITIVE PEAK ----	TAP	AZI-MUTH	PRESS COEFF	NEGATIVE PEAK ---- PSF ----	POSITIVE PEAK ----
1964	310	.92	-19.8	20.2	1966	0	.96	-18.0	21.0	1968	10	1.51	-17.5	33.2
1965	110	-1.02	-22.5	19.3	1967	0	1.81	-19.8	39.8					

TABLE 6A. PEAK LOADS FOR CONFIGURATION A : 1999 BROADWAY, CHURCH AND TOWER IN PLACE
LARGEST VALUES OF CLADDING LOAD REFERENCE PRESSURE = 22.0 PSF

* * 15 GREATEST PRESSURE MAGNITUDES * *

TAP	AZI-MUTH	PRESS COEFF	NEGATIVE PEAK ---- PSF	POSITIVE PEAK ----
452	340	-3.18	-70.0	12.2
428	320	-3.15	-69.3	18.2
309	120	-3.14	-69.0	29.8
259	0	-2.92	-64.2	19.0
472	320	-2.89	-63.7	11.7
164	80	-2.87	-63.1	18.9
272	0	-2.62	-57.7	19.1
211	10	-2.55	-56.2	23.8
165	70	-2.55	-56.2	16.7
604	310	-2.45	-53.9	31.7
320	120	-2.43	-53.4	31.1
446	340	-2.43	-53.4	12.3
345	110	-2.43	-53.4	17.4
258	10	-2.42	-53.2	15.8
404	320	-2.39	-52.5	23.2

TABLE 6A. PEAK LOADS FOR CONFIGURATION C : 1999 BROADWAY, CHURCH AND TOWER IN PLACE
LARGEST VALUES OF CLADDING LOAD REFERENCE PRESSURE = 22.0 PSF

TAP	AZI-MUTH	PRESS COEFF	NEGATIVE PEAK ---- PSF ----	POSITIVE PEAK ---- PSF ----	TAP	AZI-MUTH	PRESS COEFF	NEGATIVE PEAK ---- PSF ----	POSITIVE PEAK ---- PSF ----	TAP	AZI-MUTH	PRESS COEFF	NEGATIVE PEAK ---- PSF ----	POSITIVE PEAK ---- PSF ----
164	68	-4.00	-88.0	19.9	272	10	-3.63	-79.8	21.6	446	324	-2.94	-64.8	11.1
165	68	-2.70	-59.5	20.0	309	120	-2.62	-57.7	17.3	452	324	-2.89	-63.5	13.4
211	8	-2.94	-64.7	25.1	320	120	-2.61	-57.4	11.7	472	324	-3.78	-83.3	14.8
259	10	-3.29	-72.3	20.7	428	320	-2.04	-45.0	19.3	604	302	-3.18	-69.9	32.3

TABLE 6A. PEAK LOADS FOR CONFIGURATION C : 1999 BROADWAY, CHURCH AND TOWER IN PLACE
LARGEST VALUES OF CLADDING LOAD REFERENCE PRESSURE = 22.0 PSF

* * 12 GREATEST PRESSURE MAGNITUDES * *

TAP	AZI-MUTH	PRESS COEFF	NEGATIVE PEAK	POSITIVE PEAK
			---- PSF	----
164	68	-4.00	-88.0	19.9
472	324	-3.78	-83.3	14.8
272	10	-3.63	-79.8	21.6
259	10	-3.29	-72.3	20.7
604	302	-3.18	-69.9	32.3
446	324	-2.94	-64.8	11.1
211	8	-2.94	-64.7	25.1
452	324	-2.89	-63.5	13.4
165	68	-2.70	-59.5	20.0
309	120	-2.62	-57.7	17.3
320	120	-2.61	-57.4	11.7
428	320	-2.04	-45.0	19.3

TABLE 6B. COMPARISON OF CONFIGURATIONS A AND C : 1999 BROADWAY, CHURCH AND TOWER IN PLACE
TAPS WHERE NEGATIVE PEAK LOAD FOR CONFIG. C EXCEEDED THAT FOR CONFIG. A BY 5 PSF
REF. PRESSURE = 22.0 PSF

TAP	AZIMUTH	A CONFIG. PSF LOAD	AZIMUTH	C CONFIG PSF LOAD
164	80	-63.1	68	-88.0
211	10	-56.2	8	-64.7
259	0	-64.2	10	-72.3
272	0	-57.7	10	-79.8
446	340	-53.4	324	-64.8
472	320	-63.7	324	-83.3
604	310	-53.9	302	-69.9

TABLE 6A PEAK LOADS FOR CONFIGURATION B : 1999 BROADWAY, CHURCH ONLY
LARGEST VALUES OF CLADDING LOAD REFERENCE PRESSURE = 22.0 PSF

TAP	AZI-MUTH	PRESS COEFF	NEGATIVE PEAK ---- PSF ----	POSITIVE PEAK ----	TAP	AZI-MUTH	PRESS COEFF	NEGATIVE PEAK ---- PSF ----	POSITIVE PEAK ----	TAP	AZI-MUTH	PRESS COEFF	NEGATIVE PEAK ---- PSF ----	POSITIVE PEAK ----
1101	260	-.60	-13.1	9.8	1223	90	.63	-10.6	13.9	1412	20	.55	-9.6	12.1
1102	60	.97	-15.8	21.3	1224	160	.80	-10.0	17.6	1413	270	.70	-10.3	15.4
1103	40	.74	-15.9	16.2	1225	160	.67	-9.8	14.7	1414	30	.69	-10.8	15.2
1104	70	.72	-14.6	15.7	1226	100	.67	-10.1	14.8	1415	10	.82	-9.8	18.1
1105	60	.75	-13.7	16.5	1227	80	.73	-9.4	16.1	1416	170	-.70	-15.3	11.6
1106	20	.80	-15.5	17.7	1228	90	.63	-11.0	13.8	1417	120	-.49	-10.7	10.4
1107	20	.65	-9.9	14.3	1229	90	.63	-9.2	13.8	1418	320	.76	-10.4	16.8
1108	30	.76	-10.6	16.7	1301	10	-.59	-13.1	10.4	1419	50	.60	-10.6	13.2
1109	40	.80	-11.5	17.6	1302	270	-.67	-14.7	11.4	1420	320	.86	-11.2	19.0
1110	100	.76	-10.7	16.8	1303	320	-.81	-17.9	12.6	1421	20	-.97	-21.4	16.9
1111	80	.75	-9.9	16.5	1304	310	.68	-10.6	14.9	1422	130	-.65	-14.2	11.5
1112	20	.73	-11.6	16.1	1305	160	.53	-11.4	11.6	1423	260	-.50	-11.1	9.4
1113	30	.82	-10.4	18.0	1306	160	.63	-11.6	13.9	1424	0	.61	-12.2	13.4
1114	20	.71	-10.1	15.6	1307	350	.51	-11.2	11.2	1425	260	.59	-10.6	13.0
1115	50	.66	-11.0	14.5	1308	10	-.62	-13.6	11.5	1426	10	.64	-11.3	14.0
1116	0	.58	-11.3	12.7	1309	160	.59	-11.6	13.1	1427	300	-.54	-11.9	11.8
1117	90	.77	-9.8	16.9	1311	160	.66	-10.2	14.6	1428	10	.78	-14.7	17.1
1118	60	.88	-12.4	19.4	1312	150	.65	-9.4	14.2	1429	20	.57	-9.2	12.5
1119	40	.74	-11.4	16.3	1313	310	.62	-9.5	13.6	1430	10	.61	-9.8	13.5
1120	60	.70	-13.6	15.4	1314	150	.62	-9.4	13.7	1431	10	.62	-9.2	13.6
1121	120	.71	-10.1	15.6	1315	160	.75	-14.5	16.5	1432	40	-.67	-14.7	13.0
1122	60	.71	-11.4	15.7	1316	160	.78	-9.7	17.2	1433	340	.55	-10.0	12.1
1123	50	.68	-10.5	15.0	1317	310	-.52	-11.5	10.9	1434	270	-1.07	-23.5	13.7
1124	70	.65	-12.0	14.4	1318	300	-.44	-9.7	9.0	1435	260	-.81	-17.8	10.0
1125	60	.65	-10.0	14.3	1319	160	.50	-10.5	11.0	1901	300	-.51	-11.2	10.6
1126	270	-.54	-11.9	11.7	1320	120	-.56	-12.2	9.8	1902	10	.65	-10.4	14.2
1201	10	-.63	-13.9	10.5	1321	130	-.65	-14.2	12.2	1903	30	.79	-5.2	17.3
1202	160	.85	-15.4	18.6	1322	150	.71	-10.7	15.5	1904	0	.66	-11.5	14.4
1203	100	.92	-12.7	20.3	1323	170	.67	-9.9	14.8	1905	40	.58	-11.6	12.7
1204	60	.78	-15.0	17.1	1324	330	.47	-9.3	10.4	1906	70	.56	-11.1	12.3
1205	160	.87	-18.0	19.1	1325	160	.47	-9.2	10.3	1907	0	.57	-11.1	12.6
1206	120	.79	-17.3	17.3	1326	160	.67	-9.4	14.8	1908	0	.52	-10.3	11.4
1207	20	-.80	-17.7	14.2	1327	200	.59	-10.5	12.9	1909	320	-.56	-12.4	10.4
1208	110	.66	-11.8	14.5	1328	160	.64	-10.6	14.1	1910	40	-.59	-13.0	12.1
1209	130	.61	-10.5	13.4	1329	110	.64	-9.6	14.2	1911	30	.63	-11.0	13.8
1210	110	.68	-10.2	14.9	1330	20	-.66	-14.4	12.0	1912	30	.71	-10.8	15.7
1211	120	.73	-12.6	16.1	1331	270	-.82	-18.0	12.2	1913	330	.70	-12.1	15.5
1212	30	-.62	-13.6	13.0	1401	30	.73	-14.1	16.1	1914	10	.65	-11.4	14.4
1213	100	.60	-10.7	13.3	1402	280	-.77	-16.9	15.9	1915	40	.67	-14.1	14.7
1214	150	.64	-13.5	14.1	1403	320	.79	-13.9	17.4	1916	290	.68	-12.2	15.0
1215	160	.74	-9.6	16.2	1404	20	-.80	-17.7	15.7	1917	320	.54	-11.7	11.9
1216	100	.74	-12.3	16.2	1405	270	-1.01	-22.3	21.1	1918	330	-.73	-16.1	11.3
1217	100	.92	-9.9	20.2	1406	320	.65	-12.8	14.4	1919	130	-.64	-14.1	11.4
1218	120	.68	-13.2	15.0	1407	10	-.93	-20.5	12.1	1920	100	.69	-11.0	15.2
1219	90	.75	-12.4	16.5	1408	0	.66	-11.9	14.5	1921	10	.84	-15.5	18.4
1220	100	.76	-15.0	16.7	1409	10	.86	-10.8	19.0	1922	280	-.58	-12.7	12.0
1221	160	.87	-9.2	19.2	1410	20	.81	-9.1	17.8	1923	30	.64	-12.4	14.0
1222	90	.68	-10.6	14.9	1411	30	-.56	-12.2	12.1	1924	130	-.54	-11.9	11.3

TABLE 6A. PEAK LOADS FOR CONFIGURATION B : 1999 BROADWAY, CHURCH ONLY
LARGEST VALUES OF CLADDING LOAD REFERENCE PRESSURE = 22.0 PSF

TAP	AZI-MUTH	PRESS COEFF	NEGATIVE PEAK ---- PSF ----	POSITIVE PEAK ---- PSF ----	TAP	AZI-MUTH	PRESS COEFF	NEGATIVE PEAK ---- PSF ----	POSITIVE PEAK ---- PSF ----	TAP	AZI-MUTH	PRESS COEFF	NEGATIVE PEAK ---- PSF ----	POSITIVE PEAK ---- PSF ----
1925	120	-.62	-13.7	11.7	1940	270	-.83	-18.3	10.2	1955	170	-.96	-21.0	9.0
1926	130	.77	-11.1	17.0	1941	270	-.52	-11.5	9.4	1956	160	.61	-10.0	13.5
1927	170	-.71	-15.7	11.6	1942	250	-.50	-10.9	10.5	1957	10	.67	-12.2	14.7
1928	260	-.54	-11.9	11.9	1943	270	-.49	-10.7	9.1	1958	260	-.62	-13.6	10.2
1929	300	-.60	-13.3	11.0	1944	110	-.49	-10.7	7.6	1959	10	-.58	-12.7	9.8
1930	160	-.64	-14.2	11.7	1945	260	-.56	-12.2	10.0	1960	170	-.74	-16.3	10.8
1931	110	.67	-11.3	14.8	1946	10	-.54	-11.8	10.4	1961	160	.60	-11.2	13.1
1932	90	.60	-9.3	13.2	1947	300	-.48	-10.5	8.7	1962	20	-.68	-15.1	15.0
1933	280	-1.02	-22.5	12.3	1948	20	-.62	-13.5	10.4	1963	280	.57	-11.6	12.6
1934	260	-.72	-15.8	10.3	1949	130	.59	-11.7	13.0	1964	330	.64	-11.1	14.1
1935	300	-.53	-11.6	11.1	1950	130	.67	-10.2	14.8	1965	270	-.50	-10.9	10.6
1936	120	-.56	-12.2	11.4	1951	260	-1.03	-22.7	11.9	1966	250	-.50	-11.0	9.9
1937	120	-.73	-16.0	10.0	1952	280	-.61	-13.5	11.0	1967	310	-.70	-15.4	9.3
1938	300	-.59	-12.9	12.6	1953	160	-.48	-10.6	9.6	1968	160	-.63	-13.9	10.1
1939	160	.74	-13.7	16.3	1954	310	-.53	-11.6	11.2					

TABLE 6A. PEAK LOADS FOR CONFIGURATION B : 1999 BROADWAY, CHURCH ONLY
LARGEST VALUES OF CLADDING LOAD REFERENCE PRESSURE = 22 0 PSF

* * 15 GREATEST PRESSURE MAGNITUDES * *

TAP	AZI-MUTH	PRESS COEFF	NEGATIVE PEAK	POSITIVE PEAK
			---- PSF	----
1434	270	-1.07	-23.5	13.7
1951	260	-1.03	-22.7	11.9
1933	280	-1.02	-22.5	12.3
1405	270	-1.01	-22.3	21.1
1421	20	-.97	-21.4	16.9
1102	60	.97	-15.8	21.3
1955	170	-.96	-21.0	9.0
1407	10	-.93	-20.5	12.1
1203	100	.92	-12.7	20.3
1217	100	.92	-9.9	20.2
1118	60	.88	-12.4	19.4
1221	160	.87	-9.2	19.2
1205	160	.87	-18.0	19.1
1420	320	.86	-11.2	19.0
1409	10	.86	-10.8	19.0

TABLE 7 BASE SHEAR AND MOMENT SUMMARY : 1999 BROADWAY TOWER
CONFIGURATION A REFERENCE PRESSURE 22.0 GUST FACTOR 1.32

AZIMUTH	SHEAR (KIPS) X	SHEAR (KIPS) Y	MOMENT (1000-FT-KIPS) X	MOMENT (1000-FT-KIPS) Y	MOMENT (1000-FT-KIPS) Z	ECCEN (FT) X	ECCEN (FT) Y
0	-2181.3	-208.7	67.5	-669.0	-44.9	2	-20
10	-2028.4	71.4	-12.1	-605.4	-45.9	-1	-23
20	-1438.2	768.3	-223.6	-416.2	-3.5	-1	-2
30	-842.4	1322.5	-382.8	-234.5	37.5	20	13
40	-235.1	1674.7	-476.9	-60.8	68.7	40	6
50	377.3	1888.4	-526.6	112.2	92.4	47	-9
60	907.1	1979.1	-554.7	264.1	110.3	46	-21
70	1151.5	1972.1	-557.2	332.0	106.1	40	-23
80	1036.7	2097.8	-595.9	302.6	94.5	36	-18
90	867.1	2376.3	-673.6	255.6	96.6	36	-13
100	707.2	2604.2	-745.6	201.4	92.1	33	-9
110	571.9	2716.1	-793.2	146.4	79.6	28	-6
120	557.8	2478.4	-745.7	136.6	55.2	21	-5
130	823.0	1635.3	-530.4	211.6	27.5	13	-7
140	759.6	741.2	-271.1	202.5	10.0	7	-7
150	639.4	84.7	-69.9	175.8	2.0	0	-3
160	766.9	-524.3	128.9	210.0	-1.7	1	1
170	538.7	-567.9	177.5	145.2	-.3	0	0
180	139.5	-392.1	124.1	39.3	-5.9	13	5
190	159.5	-572.3	175.4	46.1	-20.4	33	9
200	284.7	-925.7	276.5	84.3	-38.6	38	12
210	312.4	-1006.2	303.1	98.3	-38.7	35	11
220	296.6	-946.5	300.7	100.8	-37.7	36	11
230	205.2	-556.7	175.8	67.5	-22.6	36	13
240	196.2	-357.7	102.2	61.1	-21.1	45	25
250	229.3	-399.6	114.7	72.0	-27.7	52	30
260	211.5	-438.8	125.9	65.4	-28.2	52	25
270	63.1	-416.5	115.4	14.1	-23.0	54	8
280	-278.5	-450.6	128.1	-90.6	-13.6	22	-13
290	-782.0	-669.8	199.0	-236.1	-10.5	7	-8
300	-984.4	-640.5	185.0	-311.2	-4.4	2	-3
310	-1190.2	-168.6	24.5	-369.9	15.3	-2	13
320	-2137.6	558.7	-180.2	-638.2	62.4	7	27
330	-2422.1	617.8	-185.3	-714.5	51.6	5	20
340	-2439.0	350.1	-106.9	-733.7	25.5	1	10
350	-2323.9	11.2	-7.5	-713.5	-8.7	-0	-4

TABLE 7. BASE SHEAR AND MOMENT SUMMARY : 1999 BROADWAY CHURCH, TOWER NOT IN PLACE
CONFIGURATION B REFERENCE PRESSURE 22.0 GUST FACTOR 1.32

AZIMUTH	SHEAR (KIPS)		MOMENT (1000-FT-KIPS)			ECCEN (FT)	
	X	Y	X	Y	Z	X	Y
0	-13.5	5.6	-.2	-.4	.2	5	12
10	-16.0	6.4	-.2	-.5	.2	5	13
20	-13.5	9.8	-.3	-.4	.3	9	12
30	-11.7	20.0	-.6	-.4	.3	10	6
40	-7.3	22.6	-.7	-.2	.2	9	3
50	-3.2	21.5	-.6	-.1	.1	4	1
60	2.5	21.3	-.6	.1	.0	1	-0
70	8.1	20.6	-.6	.2	-.0	-1	0
80	12.5	18.1	-.5	.4	-.0	-0	0
90	16.5	15.0	-.4	.5	.0	0	-1
100	18.1	10.4	-.3	.5	.0	1	-1
110	17.7	5.5	-.1	.5	.1	1	-3
120	16.8	1.4	-.0	.5	.0	0	-3
130	9.3	-6.8	.2	.2	.0	-1	-1
140	5.3	-11.9	.3	.1	.0	-2	-1
150	7.9	-17.4	.5	.2	-.1	3	1
160	12.6	-17.4	.5	.3	-.1	3	2
170	8.2	-7.4	.2	.2	.1	-3	-4
180	1.2	-2.7	.1	.0	.1	-21	-9
190	1.5	-5.8	.2	.0	-.0	3	1
200	2.8	-8.7	.3	.1	-.0	2	1
210	2.8	-5.9	.2	.1	-.0	0	0
220	1.6	-2.7	.1	.0	.0	-7	-4
230	1.6	-4.8	.1	.0	-.0	4	1
240	.0	-7.0	.2	-.0	-.0	3	0
250	-3.0	-6.7	.2	-.1	.0	-5	2
260	-12.3	-4.2	.2	-.4	.2	-4	13
270	-12.7	-3.5	.2	-.4	.1	-3	11
280	-9.8	-7.7	.2	-.3	.1	-5	6
290	-14.3	-7.2	.2	-.4	.1	-3	6
300	-16.1	-9.2	.3	-.5	.1	-3	5
310	-13.2	-6.0	.2	-.4	.1	-3	6
320	-16.5	-1.7	.1	-.6	.2	-1	11
330	-13.6	2.2	-.1	-.5	.3	4	22
340	-12.6	1.9	-.1	-.4	.3	3	20
350	-10.5	3.0	-.1	-.3	.2	5	16

TABLE 7. BASE SHEAR AND MOMENT SUMMARY : 1999 BROADWAY CHURCH, TOWER IN PLACE
CONFIGURATION A REFERENCE PRESSURE 22.0 GUST FACTOR 1.32

AZIMUTH	SHEAR (KIPS)		MOMENT (1000-FT-KIPS)			ECCEN (FT)	
	X	Y	X	Y	Z	X	Y
0	23.4	-2.3	.0	.7	-.2	1	11
10	14.9	21.7	-.7	.4	-.0	-1	1
20	14.9	41.9	-1.3	.4	.2	4	-1
30	14.9	59.7	-1.8	.4	.3	4	-1
40	17.7	63.7	-1.8	.5	.3	4	-1
50	21.8	63.4	-1.7	.6	.3	5	-2
60	24.6	57.8	-1.5	.6	.4	6	-3
70	22.2	47.2	-1.1	.5	.4	7	-4
80	14.1	31.9	-.7	.3	.3	8	-4
90	7.4	20.8	-.3	.1	.3	15	-5
100	-.5	13.8	-.1	-.1	.2	17	1
110	-2.9	8.5	-.0	-.2	.2	24	8
120	-4.8	4.2	.0	-.2	.2	17	19
130	-6.9	2.6	.1	-.3	.1	7	19
140	-6.9	-5.3	.2	-.2	-.0	3	-4
150	-7.7	-9.1	.2	-.2	-.2	11	-9
160	1.8	-11.1	.2	.1	-.3	30	5
170	3.5	-7.7	.2	.1	-.3	28	13
180	3.6	-2.6	.0	.1	-.1	15	21
190	3.9	-9.2	.1	.1	-.2	23	10
200	5.1	-19.3	.3	.1	-.6	27	7
210	7.1	-19.9	.3	.2	-.7	29	10
220	7.2	-11.1	.1	.2	-.5	30	20
230	4.3	-5.1	.0	.1	-.2	18	16
240	2.7	-6.1	.1	.0	-.1	13	6
250	-.0	-11.8	.2	-.0	-.1	10	-0
260	-6.6	-12.0	.2	-.2	.1	-6	3
270	-4.3	-15.5	.4	-.1	-.0	2	-1
280	-.4	-26.4	.7	.0	-.2	9	-0
290	-3.7	-44.2	1.3	-.1	-.4	8	-1
300	-1.1	-57.8	1.7	.0	-.5	9	-0
310	7.1	-40.5	1.1	.2	-.3	8	1
320	13.6	-30.8	.8	.4	-.2	4	2
330	17.3	-34.8	.9	.5	-.3	7	3
340	23.5	-35.1	.9	.7	-.1	3	2
350	25.9	-26.4	.7	.8	-.3	5	5

TABLE 7. SHEAR AND MOMENT DIAGRAMS : 1999 BROADWAY TOWER
WIND DIRECTION 0 CONFIGURATION A REFERENCE PRESSURE 22.0 PSF GUST FACTOR 1.32

FLOOR	HEIGHT	FORCE (KIPS) X	FORCE (KIPS) Y	AREA (SQ FT) X	AREA (SQ FT) Y	PRESSURE (PSF) X	PRESSURE (PSF) Y	ECCEN (FT) X	ECCEN (FT) Y	SHEAR (KIPS) X	SHEAR (KIPS) Y	MOMENT (1000-FT-KIPS) X	MOMENT (1000-FT-KIPS) Y	MOMENT (1000-FT-KIPS) Z
LBBY	0.00									-2181.3	-208.7	67.5	-669.0	-44.9
		-30.8	-2.8	4067	3717	-7.6	-.8	2	-25					
3RD	30.00									-2150.5	-205.9	61.3	-604.0	-44.1
		-12.5	-3.2	1885	1928	-6.6	-1.7	6	-25					
4TH	42.50									-2137.9	-202.7	58.7	-577.2	-43.8
		-23.7	-6.0	2252	2592	-10.5	-2.3	5	-20					
5TH	55.00									-2114.3	-196.7	56.2	-550.6	-43.3
		-32.5	-6.7	2479	3002	-13.1	-2.2	4	-19					
6TH	67.50									-2081.8	-189.9	53.8	-524.4	-42.7
		-34.5	-6.1	2479	3002	-13.9	-2.0	3	-19					
7TH	80.00									-2047.3	-183.8	51.5	-498.6	-42.0
		-36.4	-5.5	2479	3002	-14.7	-1.8	3	-19					
8TH	92.50									-2010.9	-178.3	49.2	-473.2	-41.3
		-38.4	-4.8	2479	3002	-15.5	-1.6	2	-19					
9TH	105.00									-1972.5	-173.5	47.0	-448.3	-40.5
		-40.4	-4.2	2479	3002	-16.3	-1.4	2	-19					
10TH	117.50									-1932.2	-169.3	44.9	-423.9	-39.7
		-42.3	-3.6	2479	3002	-17.1	-1.2	2	-19					
11TH	130.00									-1889.9	-165.7	42.8	-400.0	-38.9
		-44.3	-3.0	2479	3002	-17.9	-1.0	1	-19					
12TH	142.50									-1845.6	-162.7	40.7	-376.7	-38.0
		-45.8	-2.6	2479	3002	-18.5	-.9	1	-19					
14TH	155.00									-1799.8	-160.1	38.7	-353.9	-37.2
		-47.0	-2.4	2479	3002	-19.0	-.8	1	-19					
15TH	167.50									-1752.8	-157.7	36.7	-331.7	-36.3
		-48.3	-2.2	2479	3002	-19.5	-.7	1	-19					
16TH	180.00									-1704.5	-155.5	34.8	-310.1	-35.4
		-49.5	-2.0	2479	3002	-20.0	-.7	1	-19					
17TH	192.50									-1655.0	-153.5	32.8	-289.1	-34.4
		-50.8	-1.8	2479	3002	-20.5	-.6	1	-19					
18TH	205.00									-1604.2	-151.7	30.9	-268.7	-33.5
		-52.0	-1.6	2479	3002	-21.0	-.5	1	-19					
19TH	217.50									-1552.2	-150.1	29.0	-249.0	-32.5
		-53.3	-1.4	2479	3002	-21.5	-.5	0	-18					
20TH	230.00									-1498.9	-148.7	27.2	-229.9	-31.5
		-54.5	-1.5	2479	3002	-22.0	-.5	1	-19					
21ST	242.50									-1444.4	-147.3	25.3	-211.5	-30.5
		-55.6	-1.9	2479	3002	-22.4	-.6	1	-19					
22ND	255.00									-1388.8	-145.4	23.5	-193.8	-29.5
		-56.7	-2.3	2479	3002	-22.9	-.8	1	-19					
23RD	267.50									-1332.1	-143.1	21.7	-176.8	-28.4
		-57.9	-2.7	2479	3002	-23.4	-.9	1	-19					
24TH	280.00									-1274.2	-140.3	19.9	-160.5	-27.2
		-59.0	-3.2	2479	3002	-23.8	-1.1	1	-20					
25TH	292.50									-1215.2	-137.2	18.2	-145.0	-26.1
		-60.1	-3.6	2479	3002	-24.3	-1.2	1	-20					
26TH	305.00									-1155.0	-133.6	16.5	-130.2	-24.9
		-61.3	-4.0	2479	3002	-24.7	-1.3	1	-20					
27TH	317.50									-1093.8	-129.6	14.8	-116.1	-23.6
		-62.3	-4.5	2479	3002	-25.1	-1.5	1	-20					

TABLE 7. SHEAR AND MOMENT DIAGRAMS : 1999 BROADWAY TOWER
WIND DIRECTION 0 CONFIGURATION A REFERENCE PRESSURE 22.0 PSF GUST FACTOR 1.32

FLOOR	HEIGHT	FORCE (KIPS) X	FORCE (KIPS) Y	AREA (SQ FT) X	AREA (SQ FT) Y	PRESSURE (PSF) X	PRESSURE (PSF) Y	ECCEN (FT) X	ECCEN (FT) Y	SHEAR (KIPS) X	SHEAR (KIPS) Y	MOMENT (1000-FT-KIPS) X	MOMENT (1000-FT-KIPS) Y	MOMENT (1000-FT-KIPS) Z
28TH	330.00									-1031.5	-125.1	13.2	-102.8	-22.4
		-63.0	-5.1	2479	3002	-25.4	-1.7	2	-21					
29TH	342.50									-968.5	-120.0	11.7	-90.3	-21.1
		-63.6	-5.8	2479	3002	-25.7	-1.9	2	-21					
30TH	355.00									-904.9	-114.2	10.3	-78.6	-19.7
		-64.3	-6.4	2479	3002	-26.0	-2.1	2	-21					
31ST	367.50									-840.6	-107.8	8.9	-67.7	-18.4
		-65.0	-7.1	2479	3002	-26.2	-2.4	2	-21					
32ND	380.00									-775.6	-100.7	7.6	-57.6	-17.0
		-65.7	-7.8	2479	3002	-26.5	-2.6	2	-21					
33RD	392.50									-709.9	-92.9	6.4	-48.3	-15.6
		-66.4	-8.4	2479	3002	-26.8	-2.8	3	-21					
34TH	405.00									-643.5	-84.5	5.2	-39.9	-14.1
		-66.7	-8.8	2479	3002	-26.9	-2.9	3	-21					
35TH	417.50									-576.8	-75.7	4.2	-32.2	-12.7
		-66.4	-8.6	2479	3002	-26.8	-2.9	3	-21					
36TH	430.00									-510.4	-67.1	3.4	-25.4	-11.3
		-66.1	-8.5	2479	3002	-26.7	-2.8	3	-21					
37TH	442.50									-444.3	-58.6	2.6	-19.5	-9.8
		-65.8	-8.4	2479	3002	-26.5	-2.8	3	-21					
38TH	455.00									-378.5	-50.2	1.9	-14.3	-8.4
		-65.5	-8.3	2479	3002	-26.4	-2.7	3	-21					
39TH	467.50									-313.0	-41.9	1.3	-10.0	-7.0
		-65.2	-8.1	2479	3002	-26.3	-2.7	3	-21					
40TH	480.00									-247.8	-33.8	.8	-6.5	-5.6
		-64.9	-8.0	2479	3002	-26.2	-2.7	3	-21					
41ST	492.50									-182.9	-25.8	.5	-3.8	-4.2
		-61.5	-8.3	2479	3002	-24.8	-2.8	3	-22					
42ND	505.00									-121.4	-17.5	.2	-1.9	-2.9
		-53.9	-9.1	2479	3002	-21.8	-3.0	4	-24					
43RD	517.50									-67.4	-8.4	.0	-.7	-1.5
		-46.4	-10.0	2479	3002	-18.7	-3.3	6	-27					
PARA	530.00									-21.0	1.5	-.0	-.2	-.2
		-21.0	1.5	1856	1929	-11.3	.8	-1	-11					
TOP	547.00									0.0	0.0	0.0	0.0	0.0

TABLE 7. SHEAR AND MOMENT DIAGRAMS : 1999 BROADWAY TOWER
WIND DIRECTION 10 CONFIGURATION A REFERENCE PRESSURE 22.0 PSF GUST FACTOR 1.32

FLOOR	HEIGHT	FORCE (KIPS) X	FORCE (KIPS) Y	AREA (SQ FT) X	AREA (SQ FT) Y	PRESSURE (PSF) X	PRESSURE (PSF) Y	ECCEN (FT) X	ECCEN (FT) Y	SHEAR (KIPS) X	SHEAR (KIPS) Y	MOMENT (1000-FT-KIPS) X	MOMENT (1000-FT-KIPS) Y	MOMENT (1000-FT-KIPS) Z
LBBY	0.00									-2028.4	71.4	-12.1	-605.4	-45.9
3RD	30.00	-27.6	8.2	4067	3717	-6.8	2.2	-9	-30	-2000.8	63.2	-10.1	-545.0	-45.0
4TH	42.50	-12.8	2.0	1885	1928	-6.8	1.1	-4	-27	-1987.9	61.1	-9.4	-520.0	-44.7
5TH	55.00	-24.4	2.0	2252	2592	-10.8	.8	-1	-13	-1963.5	59.1	-8.6	-495.3	-44.3
6TH	67.50	-33.0	2.6	2479	3002	-13.3	.9	-1	-13	-1930.6	56.5	-7.9	-471.0	-43.9
7TH	80.00	-34.9	3.1	2479	3002	-14.1	1.0	-1	-14	-1895.7	53.5	-7.2	-447.1	-43.4
8TH	92.50	-36.8	3.6	2479	3002	-14.9	1.2	-1	-14	-1858.8	49.9	-6.5	-423.6	-42.9
9TH	105.00	-38.8	4.1	2479	3002	-15.7	1.4	-2	-15	-1820.0	45.8	-6.0	-400.6	-42.3
10TH	117.50	-40.7	4.6	2479	3002	-16.4	1.5	-2	-16	-1779.3	41.2	-5.4	-378.1	-41.6
11TH	130.00	-42.7	5.1	2479	3002	-17.2	1.7	-2	-17	-1736.6	36.1	-4.9	-356.2	-40.9
12TH	142.50	-44.6	5.5	2479	3002	-18.0	1.9	-2	-17	-1692.0	30.4	-4.5	-334.7	-40.1
14TH	155.00	-45.9	5.4	2479	3002	-18.5	1.8	-2	-18	-1646.1	25.0	-4.2	-313.9	-39.3
15TH	167.50	-46.8	4.9	2479	3002	-18.9	1.6	-2	-19	-1599.3	20.1	-3.9	-293.6	-38.4
16TH	180.00	-47.7	4.4	2479	3002	-19.3	1.5	-2	-20	-1551.6	15.7	-3.7	-273.9	-37.5
17TH	192.50	-48.6	3.9	2479	3002	-19.6	1.3	-2	-21	-1502.9	11.8	-3.5	-254.8	-36.4
18TH	205.00	-49.6	3.4	2479	3002	-20.0	1.1	-1	-22	-1453.3	8.5	-3.4	-236.3	-35.4
19TH	217.50	-50.5	2.9	2479	3002	-20.4	1.0	-1	-22	-1402.8	5.6	-3.3	-218.5	-34.2
20TH	230.00	-51.4	2.4	2479	3002	-20.7	.8	-1	-23	-1351.4	3.2	-3.2	-201.3	-33.0
21ST	242.50	-52.3	1.9	2479	3002	-21.1	.6	-1	-24	-1299.1	1.4	-3.2	-184.7	-31.8
22ND	255.00	-53.2	1.4	2479	3002	-21.5	.5	-1	-24	-1245.9	.0	-3.2	-168.8	-30.5
23RD	267.50	-54.1	.9	2479	3002	-21.8	.3	-0	-24	-1191.8	-.8	-3.2	-153.5	-29.2
24TH	280.00	-54.9	.4	2479	3002	-22.2	.1	-0	-25	-1136.9	-1.2	-3.2	-139.0	-27.8
25TH	292.50	-55.8	-.1	2479	3002	-22.5	-.0	0	-25	-1081.1	-1.0	-3.2	-125.1	-26.4
26TH	305.00	-56.7	-.6	2479	3002	-22.9	-.2	0	-25	-1024.4	-.4	-3.2	-112.0	-25.0
27TH	317.50	-57.6	-1.1	2479	3002	-23.2	-.4	1	-26	-966.8	.8	-3.2	-99.5	-23.5
		-58.3	-1.6	2479	3002	-23.5	-.5	1	-26					

TABLE 7. SHEAR AND MOMENT DIAGRAMS : 1999 BROADWAY TOWER
WIND DIRECTION 10 CONFIGURATION A REFERENCE PRESSURE 22.0 PSF GUST FACTOR 1.32

FLOOR	HEIGHT	FORCE (KIPS) X	FORCE (KIPS) Y	AREA (SQ FT) X	AREA (SQ FT) Y	PRESSURE (PSF) X	PRESSURE (PSF) Y	ECCEN (FT) X	ECCEN (FT) Y	SHEAR (KIPS) X	SHEAR (KIPS) Y	MOMENT (1000-FT-KIPS) X	MOMENT (1000-FT-KIPS) Y	MOMENT (1000-FT-KIPS) Z
28TH	330.00									-908.5	2.3	-3.2	-87.8	-22.0
		-58.7	-1.8	2479	3002	-23.7	-.6	1	-26					
29TH	342.50									-849.8	4.1	-3.2	-76.8	-20.5
		-59.1	-2.0	2479	3002	-23.8	-.7	1	-26					
30TH	355.00									-790.7	6.1	-3.1	-66.6	-18.9
		-59.5	-2.2	2479	3002	-24.0	-.7	1	-26					
31ST	367.50									-731.2	8.4	-3.0	-57.0	-17.4
		-59.9	-2.4	2479	3002	-24.2	-.8	1	-26					
32ND	380.00									-671.3	10.8	-2.9	-48.3	-15.8
		-60.3	-2.7	2479	3002	-24.3	-.9	1	-26					
33RD	392.50									-610.9	13.5	-2.7	-40.3	-14.2
		-60.7	-2.9	2479	3002	-24.5	-1.0	1	-27					
34TH	405.00									-550.2	16.3	-2.5	-33.0	-12.6
		-60.6	-2.7	2479	3002	-24.5	-.9	1	-26					
35TH	417.50									-489.6	19.1	-2.3	-26.5	-11.0
		-59.7	-2.0	2479	3002	-24.1	-.7	1	-26					
36TH	430.00									-429.9	21.1	-2.1	-20.8	-9.4
		-58.8	-1.3	2479	3002	-23.7	-.4	1	-25					
37TH	442.50									-371.1	22.4	-1.8	-15.8	-8.0
		-57.8	-.5	2479	3002	-23.3	-.2	0	-24					
38TH	455.00									-313.2	22.9	-1.5	-11.5	-6.5
		-56.9	.2	2479	3002	-23.0	.1	-0	-24					
39TH	467.50									-256.3	22.6	-1.2	-7.9	-5.2
		-56.0	1.0	2479	3002	-22.6	.3	-0	-23					
40TH	480.00									-200.4	21.7	-1.0	-5.1	-3.9
		-55.0	1.7	2479	3002	-22.2	.6	-1	-22					
41ST	492.50									-145.3	19.9	-.7	-2.9	-2.7
		-51.3	2.4	2479	3002	-20.7	.8	-1	-21					
42ND	505.00									-94.0	17.6	-.5	-1.4	-1.6
		-44.0	2.9	2479	3002	-17.7	1.0	-1	-20					
43RD	517.50									-50.0	14.6	-.3	-.5	-.7
		-36.6	3.5	2479	3002	-14.8	1.2	-2	-18					
PARA	530.00									-13.5	11.1	-.1	-.1	-.1
		-13.5	11.1	1856	1929	-7.3	5.8	-2	-3					
TOP	547.00									0.0	0.0	0.0	0.0	0.0

TABLE 7. SHEAR AND MOMENT DIAGRAMS : 1999 BROADWAY TOWER
WIND DIRECTION 20 CONFIGURATION A REFERENCE PRESSURE 22 0 PSF GUST FACTOR 1 32

FLOOR	HEIGHT	FORCE (KIPS) X	FORCE (KIPS) Y	AREA (SQ FT) X	AREA (SQ FT) Y	PRESSURE (PSF) X	PRESSURE (PSF) Y	ECCEN (FT) X	ECCEN (FT) Y	SHEAR (KIPS) X	SHEAR (KIPS) Y	MOMENT (1000-FT-KIPS) X	MOMENT (1000-FT-KIPS) Y	MOMENT (1000-FT-KIPS) Z
LBBY	0.00									-1438.2	768.3	-223.6	-416.2	-3.5
		-22.2	22.3	4067	3717	-5.4	6.0	-17	-17					
3RD	30.00									-1416.0	746.0	-200.9	-373.4	-2.7
		-12.0	9.3	1885	1928	-6.4	4.8	-8	-10					
4TH	42.50									-1404.0	736.7	-191.6	-355.7	-2.5
		-20.6	12.9	2252	2592	-9.2	5.0	2	3					
5TH	55.00									-1383.4	723.7	-182.5	-338.3	-2.6
		-26.6	15.5	2479	3002	-10.7	5.2	3	5					
6TH	67.50									-1356.7	708.3	-173.6	-321.2	-2.8
		-27.7	16.1	2479	3002	-11.2	5.4	2	4					
7TH	80.00									-1329.0	692.2	-164.8	-304.4	-3.0
		-28.8	16.6	2479	3002	-11 6	5.5	2	3					
8TH	92.50									-1300.2	675.5	-156.3	-288.0	-3 1
		-29.9	17.2	2479	3002	-12.1	5.7	1	2					
9TH	105.00									-1270.2	658.3	-147.9	-271.9	-3.2
		-31.0	17.8	2479	3002	-12.5	5.9	1	2					
10TH	117.50									-1239.2	640 5	-139.8	-256.2	-3.3
		-32.2	18.4	2479	3002	-13.0	6.1	1	1					
11TH	130.00									-1207.0	622.1	-131.9	-240.9	-3.3
		-33.3	19.0	2479	3002	-13.4	6.3	0	0					
12TH	142.50									-1173.8	603.2	-124.2	-226.0	-3.3
		-34.1	19.1	2479	3002	-13.8	6.3	-0	-0					
14TH	155.00									-1139.7	584.1	-116.8	-211.6	-3.3
		-34.8	19.0	2479	3002	-14.0	6.3	-0	-1					
15TH	167.50									-1104.8	565.2	-109.6	-197.6	-3.3
		-35.5	18.9	2479	3002	-14.3	6.3	-1	-1					
16TH	180.00									-1069.3	546 3	-102.7	-184 0	-3 2
		-36.3	18.8	2479	3002	-14.6	6.2	-1	-2					
17TH	192.50									-1033 0	527.6	-96.0	-170.8	-3.1
		-37.0	18.7	2479	3002	-14.9	6.2	-1	-3					
18TH	205.00									-996.1	508.9	-89.5	-158.2	-3.0
		-37.7	18.6	2479	3002	-15.2	6.2	-2	-3					
19TH	217.50									-958.4	490.4	-83.3	-145.9	-2.8
		-38.4	18.5	2479	3002	-15.5	6.1	-2	-4					
20TH	230.00									-919.9	471.9	-77.2	-134.2	-2.7
		-38.9	18.3	2479	3002	-15.7	6.1	-2	-4					
21ST	242.50									-881.1	453.6	-71.5	-122.9	-2.5
		-39.0	18.2	2479	3002	-15.7	6.0	-2	-5					
22ND	255.00									-842.1	435.4	-65.9	-112.2	-2.2
		-39.1	18.0	2479	3002	-15.8	6.0	-2	-5					
23RD	267.50									-803.0	417.4	-60.6	-101.9	-2.0
		-39.2	17.8	2479	3002	-15.8	5.9	-2	-5					
24TH	280.00									-763.7	399.6	-55.5	-92.1	-1.7
		-39.4	17.7	2479	3002	-15.9	5.9	-3	-6					
25TH	292.50									-724.4	381.9	-50.6	-82.8	-1.5
		-39.5	17.5	2479	3002	-15.9	5.8	-3	-6					
26TH	305.00									-684.9	364.4	-45.9	-74.0	-1.2
		-39.6	17.3	2479	3002	-16.0	5.8	-3	-6					
27TH	317.50									-645.2	347.1	-41.5	-65.7	-.9
		-39.8	17.2	2479	3002	-16.0	5.7	-3	-7					

TABLE 7. SHEAR AND MOMENT DIAGRAMS : 1999 BROADWAY TOWER
WIND DIRECTION 20 CONFIGURATION A REFERENCE PRESSURE 22.0 PSF GUST FACTOR 1.32

FLOOR	HEIGHT	FORCE (KIPS) X	FORCE (KIPS) Y	AREA (SQ FT) X	AREA (SQ FT) Y	PRESSURE (PSF) X	PRESSURE (PSF) Y	ECCEN (FT) X	ECCEN (FT) Y	SHEAR (KIPS) X	SHEAR (KIPS) Y	MOMENT (1000-FT-KIPS) X	MOMENT (1000-FT-KIPS) Y	MOMENT (1000-FT-KIPS) Z
28TH	330.00									-605.4	329.9	-37.2	-57.9	-.6
		-39.9	17.1	2479	3002	-16.1	5.7	-3	-7					
29TH	342.50									-565.5	312.7	-33.2	-50.5	-.2
		-40.1	17.1	2479	3002	-16.2	5.7	-3	-7					
30TH	355.00									-525.5	295.7	-29.4	-43.7	.1
		-40.2	17.0	2479	3002	-16.2	5.7	-3	-8					
31ST	367.50									-485.2	278.6	-25.8	-37.4	.5
		-40.4	17.0	2479	3002	-16.3	5.7	-3	-8					
32ND	380.00									-444.9	261.7	-22.5	-31.6	.8
		-40.5	16.9	2479	3002	-16.3	5.6	-3	-8					
33RD	392.50									-404.4	244.7	-19.3	-26.3	1.2
		-40.7	16.9	2479	3002	-16.4	5.6	-3	-8					
34TH	405.00									-363.7	227.9	-16.3	-21.5	1.6
		-40.5	17.2	2479	3002	-16.4	5.7	-3	-8					
35TH	417.50									-323.2	210.7	-13.6	-17.2	2.0
		-40.0	18.1	2479	3002	-16.1	6.0	-2	-5					
36TH	430.00									-283.2	192.7	-11.1	-13.4	2.2
		-39.4	19.0	2479	3002	-15.9	6.3	-1	-3					
37TH	442.50									-243.7	173.7	-8.8	-10.1	2.4
		-38.9	19.9	2479	3002	-15.7	6.6	-0	-0					
38TH	455.00									-204.8	153.8	-6.7	-7.3	2.4
		-38.3	20.8	2479	3002	-15.5	6.9	1	2					
39TH	467.50									-166.5	133.0	-4.9	-5.0	2.3
		-37.8	21.7	2479	3002	-15.3	7.2	2	4					
40TH	480.00									-128.7	111.3	-3.4	-3.1	2.1
		-37.3	22.6	2479	3002	-15.0	7.5	4	6					
41ST	492.50									-91.4	88.7	-2.2	-1.8	1.8
		-34.2	23.2	2479	3002	-13.8	7.7	6	8					
42ND	505.00									-57.2	65.5	-1.2	-.8	1.4
		-27.9	23.4	2479	3002	-11.3	7.8	9	11					
43RD	517.50									-29.3	42.0	-.5	-.3	.8
		-21.7	23.6	2479	3002	-8.7	7.9	15	13					
PARA	530.00									-7.6	18.4	-.2	-.1	.2
		-7.6	18.4	1856	1929	-4.1	9.5	9	4					
TOP	547.00									0.0	0.0	0.0	0.0	0.0

TABLE 7. SHEAR AND MOMENT DIAGRAMS : 1999 BROADWAY TOWER
WIND DIRECTION 30 CONFIGURATION A REFERENCE PRESSURE 22.0 PSF GUST FACTOR 1.32

FLOOR	HEIGHT	FORCE (KIPS) X	FORCE (KIPS) Y	AREA (SQ FT) X	AREA (SQ FT) Y	PRESSURE (PSF) X	PRESSURE (PSF) Y	ECCEN (FT) X	ECCEN (FT) Y	SHEAR (KIPS) X	SHEAR (KIPS) Y	MOMENT (1000-FT-KIPS) X	MOMENT (1000-FT-KIPS) Y	MOMENT (1000-FT-KIPS) Z
LBBY	0.00									-842.4	1322.5	-382.8	-234.5	37.5
		-14.7	37.3	4067	3717	-3.6	10.0	-12	-5					
3RD	30.00									-827.7	1285.2	-343.7	-209.5	38.0
		-9.4	16.1	1885	1928	-5.0	8.3	-2	-1					
4TH	42.50									-818.3	1269.1	-327.7	-199.2	38.1
		-15.4	21.0	2252	2592	-6.9	8.1	13	9					
5TH	55.00									-802.9	1248.1	-312.0	-189.1	37.7
		-19.1	25.3	2479	3002	-7.7	8.4	19	14					
6TH	67.50									-783.8	1222.7	-296.5	-179.1	36.9
		-19.5	26.3	2479	3002	-7.9	8.8	19	14					
7TH	80.00									-764.3	1196.4	-281.4	-169.5	36.1
		-19.9	27.3	2479	3002	-8.0	9.1	19	14					
8TH	92.50									-744.4	1169.2	-266.6	-160.0	35.4
		-20.3	28.2	2479	3002	-8.2	9.4	19	14					
9TH	105.00									-724.2	1141.0	-252.2	-150.9	34.5
		-20.6	29.2	2479	3002	-8.3	9.7	19	14					
10TH	117.50									-703.6	1111.8	-238.1	-141.9	33.7
		-21.0	30.1	2479	3002	-8.5	10.0	20	14					
11TH	130.00									-682.5	1081.7	-224.4	-133.3	32.8
		-21.4	31.1	2479	3002	-8.6	10.4	20	14					
12TH	142.50									-661.1	1050.6	-211.1	-124.9	31.9
		-21.6	31.5	2479	3002	-8.7	10.5	20	13					
14TH	155.00									-639.5	1019.1	-198.1	-116.7	31.0
		-21.7	31.7	2479	3002	-8.7	10.5	19	13					
15TH	167.50									-617.8	987.4	-185.6	-108.9	30.1
		-21.7	31.8	2479	3002	-8.8	10.6	19	13					
16TH	180.00									-596.1	955.6	-173.5	-101 3	29.2
		-21.8	32.0	2479	3002	-8.8	10.7	19	13					
17TH	192.50									-574.3	923.6	-161.7	-94.0	28.3
		-21.9	32.2	2479	3002	-8.8	10.7	19	13					
18TH	205.00									-552.4	891.5	-150.4	-86.9	27.4
		-21.9	32.3	2479	3002	-8.9	10.8	19	13					
19TH	217.50									-530.5	859.1	-139.4	-80.2	26.5
		-22.0	32.5	2479	3002	-8.9	10.8	19	13					
20TH	230.00									-508.5	826.6	-128.9	-73.7	25.6
		-22.1	32.6	2479	3002	-8.9	10.9	18	13					
21ST	242.50									-486.4	794.0	-118.8	-67.5	24.8
		-22.1	32.6	2479	3002	-8.9	10.8	19	13					
22ND	255.00									-464.3	761.5	-109.0	-61.5	23.9
		-22.1	32.5	2479	3002	-8.9	10.8	19	13					
23RD	267.50									-442.2	728.9	-99.7	-55.8	23.0
		-22.2	32.5	2479	3002	-8.9	10.8	19	13					
24TH	280.00									-420.0	696.4	-90.8	-50.5	22.1
		-22.2	32.5	2479	3002	-9.0	10.8	19	13					
25TH	292.50									-397.8	663.9	-82.3	-45.3	21.2
		-22.2	32.5	2479	3002	-9.0	10.8	19	13					
26TH	305.00									-375.6	631.4	-74.2	-40.5	20.3
		-22.2	32.5	2479	3002	-9.0	10.8	19	13					
27TH	317.50									-353.4	599.0	-66.5	-36.0	19.4
		-22.3	32.5	2479	3002	-9.0	10.8	19	13					

TABLE 7. SHEAR AND MOMENT DIAGRAMS : 1999 BROADWAY TOWER
WIND DIRECTION 30 CONFIGURATION A REFERENCE PRESSURE 22.0 PSF GUST FACTOR 1.32

FLOOR	HEIGHT	FORCE (KIPS) X	FORCE (KIPS) Y	AREA (SQ FT) X	AREA (SQ FT) Y	PRESSURE (PSF) X	PRESSURE (PSF) Y	ECCEN (FT) X	ECCEN (FT) Y	SHEAR (KIPS) X	SHEAR (KIPS) Y	MOMENT (1000-FT-KIPS) X	MOMENT (1000-FT-KIPS) Y	MOMENT (1000-FT-KIPS) Z
28TH	330.00									-331.1	566.5	-59.2	-31.7	18.5
		-22.3	32.7	2479	3002	-9.0	10.9	19	13					
29TH	342.50									-308.8	533.8	-52.4	-27.7	17.5
		-22.3	32.8	2479	3002	-9.0	10.9	20	13					
30TH	355.00									-286.5	501.0	-45.9	-24.0	16.6
		-22.3	33.0	2479	3002	-9.0	11.0	20	13					
31ST	367.50									-264.2	468.0	-39.8	-20.5	15.7
		-22.3	33.2	2479	3002	-9.0	11.1	20	13					
32ND	380.00									-241.8	434.8	-34.2	-17.4	14.7
		-22.4	33.4	2479	3002	-9.0	11.1	20	13					
33RD	392.50									-219.5	401.4	-29.0	-14.5	13.7
		-22.4	33.5	2479	3002	-9.0	11.2	20	14					
34TH	405.00									-197.1	367.9	-24.2	-11.9	12.7
		-22.2	33.8	2479	3002	-9.0	11.3	21	14					
35TH	417.50									-174.9	334.0	-19.8	-9.5	11.7
		-21.7	34.4	2479	3002	-8.8	11.5	23	14					
36TH	430.00									-153.2	299.6	-15.8	-7.5	10.6
		-21.3	34.9	2479	3002	-8.6	11.6	24	15					
37TH	442.50									-131.9	264.7	-12.3	-5.7	9.5
		-20.8	35.5	2479	3002	-8.4	11.8	26	15					
38TH	455.00									-111.1	229.2	-9.2	-4.2	8.2
		-20.3	36.0	2479	3002	-8.2	12.0	27	15					
39TH	467.50									-90.8	193.2	-6.6	-2.9	6.9
		-19.8	36.6	2479	3002	-8.0	12.2	29	16					
40TH	480.00									-71.0	156.6	-4.4	-1.9	5.6
		-19.4	37.1	2479	3002	-7.8	12.4	31	16					
41ST	492.50									-51.7	119.6	-2.7	-1.2	4.1
		-17.5	36.4	2479	3002	-7.1	12.1	32	15					
42ND	505.00									-34.2	83.2	-1.4	-.6	2.7
		-13.9	34.1	2479	3002	-5.6	11.4	33	14					
43RD	517.50									-20.3	49.0	-.6	-.3	1.4
		-10.3	31.8	2479	3002	-4.1	10.6	34	11					
PARA	530.00									-10.0	17.2	-.1	-.1	.1
		-10.0	17.2	1856	1929	-5.4	8.9	6	4					
TOP	547.00									0.0	0.0	0.0	0.0	0.0

TABLE 7. SHEAR AND MOMENT DIAGRAMS : 1999 BROADWAY TOWER
WIND DIRECTION 40 CONFIGURATION A REFERENCE PRESSURE 22 0 PSF GUST FACTOR 1.32

FLOOR	HEIGHT	FORCE (KIPS) X	FORCE (KIPS) Y	AREA (SQ FT) X	AREA (SQ FT) Y	PRESSURE (PSF) X	PRESSURE (PSF) Y	ECCEN (FT) X	ECCEN (FT) Y	SHEAR (KIPS) X	SHEAR (KIPS) Y	MOMENT (1000-FT-KIPS) X	MOMENT (1000-FT-KIPS) Y	MOMENT (1000-FT-KIPS) Z
LBBY	0.00									-235.1	1674.7	-476.9	-60.8	68.7
		2.0	50.5	4067	3717	.5	13.6	-0	0					
3RD	30.00									-237.1	1624.2	-427.4	-53.7	68.7
		-3.1	21.8	1885	1928	-1.6	11.3	13	2					
4TH	42.50									-234.0	1602.4	-407.2	-50.7	68.4
		-7.8	29.0	2252	2592	-3.5	11 2	33	9					
5TH	55.00									-226.2	1573.4	-387.4	-47.8	67.3
		-9.9	35.3	2479	3002	-4.0	11.8	43	12					
6TH	67.50									-216.3	1538.1	-367.9	-45.1	65.7
		-9.6	36.0	2479	3002	-3.9	12.0	43	11					
7TH	80.00									-206.7	1502.1	-348.9	-42.4	64.1
		-9.3	36.7	2479	3002	-3.8	12 2	43	11					
8TH	92.50									-197.4	1465.5	-330.4	-39.9	62.4
		-9.1	37.4	2479	3002	-3.7	12.5	43	10					
9TH	105.00									-188.3	1428.1	-312.3	-37.5	60.7
		-8.8	38.1	2479	3002	-3.5	12.7	43	10					
10TH	117.50									-179.5	1390.0	-294.7	-35.2	58.9
		-8.5	38.8	2479	3002	-3.4	12.9	43	9					
11TH	130.00									-171.0	1351.2	-277.6	-33.0	57.2
		-8.2	39.5	2479	3002	-3.3	13.1	43	9					
12TH	142 50									-162.8	1311.8	-260.9	-30.9	55.4
		-7.9	39.6	2479	3002	-3.2	13.2	43	9					
14TH	155.00									-154.9	1272.2	-244.8	-28.9	53.6
		-7.5	39.5	2479	3002	-3.0	13.1	42	8					
15TH	167.50									-147.4	1232.7	-229.1	-27.1	51.9
		-7.1	39.3	2479	3002	-2.9	13.1	41	7					
16TH	180.00									-140.3	1193.4	-214.0	-25.3	50.2
		-6.7	39.2	2479	3002	-2.7	13 1	41	7					
17TH	192.50									-133.7	1154.2	-199.3	-23.5	48.6
		-6.3	39.1	2479	3002	-2.5	13.0	40	6					
18TH	205.00									-127 4	1115.2	-185.1	-21.9	47.0
		-5.9	38.9	2479	3002	-2.4	13.0	39	6					
19TH	217.50									-121 5	1076.2	-171.4	-20 4	45 5
		-5.5	38.8	2479	3002	-2.2	12.9	38	5					
20TH	230.00									-116.0	1037.4	-158.2	-18.9	44.0
		-5.2	39.0	2479	3002	-2.1	13.0	38	5					
21ST	242.50									-110.8	998.4	-145.5	-17.5	42.4
		-5.0	39.6	2479	3002	-2.0	13.2	39	5					
22ND	255.00									-105.8	958.7	-133.2	-16.1	40.9
		-4.8	40.2	2479	3002	-2.0	13.4	39	5					
23RD	267.50									-100.9	918.5	-121.5	-14.8	39.3
		-4.7	40 9	2479	3002	-1.9	13.6	40	5					
24TH	280.00									-96.3	877.6	-110.3	-13.6	37.6
		-4.5	41 5	2479	3002	-1.8	13.8	41	4					
25TH	292.50									-91 8	836.2	-99.6	-12.4	35.9
		-4 3	42 1	2479	3002	-1.7	14.0	42	4					
26TH	305.00									-87.4	794.1	-89.4	-11.3	34.1
		-4.1	42.7	2479	3002	-1.7	14.2	42	4					
27TH	317 50									-83.3	751.5	-79.7	-10.2	32.3
		-4.0	43 2	2479	3002	-1.6	14.4	43	4					

TABLE 7. SHEAR AND MOMENT DIAGRAMS : 1999 BROADWAY TOWER
WIND DIRECTION 40 CONFIGURATION A REFERENCE PRESSURE 22.0 PSF GUST FACTOR 1.32

FLOOR	HEIGHT	FORCE (KIPS) X	FORCE (KIPS) Y	AREA (SQ FT) X	AREA (SQ FT) Y	PRESSURE (PSF) X	PRESSURE (PSF) Y	ECCEN (FT) X	ECCEN (FT) Y	SHEAR (KIPS) X	SHEAR (KIPS) Y	MOMENT (1000-FT-KIPS) X	MOMENT (1000-FT-KIPS) Y	MOMENT (1000-FT-KIPS) Z
28TH	330.00									-79.3	708.3	-70.6	-9.2	30.5
		-4.1	43.5	2479	3002	-1.6	14.5	43	4					
29TH	342.50									-75.2	664.8	-62.0	-8.2	28.6
		-4.1	43.8	2479	3002	-1.7	14.6	43	4					
30TH	355.00									-71.1	621.0	-54.0	-7.3	26.7
		-4.2	44.1	2479	3002	-1.7	14.7	43	4					
31ST	367.50									-66.9	576.9	-46.5	-6.5	24.8
		-4.2	44.4	2479	3002	-1.7	14.8	43	4					
32ND	380.00									-62.7	532.5	-39.6	-5.6	22.9
		-4.3	44.7	2479	3002	-1.7	14.9	43	4					
33RD	392.50									-58.4	487.8	-33.2	-4.9	20.9
		-4.3	45.0	2479	3002	-1.7	15.0	43	4					
34TH	405.00									-54.1	442.7	-27.4	-4.2	19.0
		-4.4	45.2	2479	3002	-1.8	15.1	43	4					
35TH	417.50									-49.7	397.5	-22.1	-3.5	17.0
		-4.4	45.3	2479	3002	-1.8	15.1	44	4					
36TH	430.00									-45.4	352.2	-17.4	-2.9	15.0
		-4.4	45.3	2479	3002	-1.8	15.1	44	4					
37TH	442.50									-41.0	307.0	-13.3	-2.4	13.0
		-4.4	45.3	2479	3002	-1.8	15.1	44	4					
38TH	455.00									-36.6	261.6	-9.8	-1.9	11.0
		-4.4	45.3	2479	3002	-1.8	15.1	44	4					
39TH	467.50									-32.1	216.3	-6.8	-1.5	8.9
		-4.4	45.4	2479	3002	-1.8	15.1	45	4					
40TH	480.00									-27.7	171.0	-4.3	-1.1	6.9
		-4.5	45.4	2479	3002	-1.8	15.1	45	4					
41ST	492.50									-23.3	125.6	-2.5	-.8	4.8
		-4.0	43.4	2479	3002	-1.6	14.5	44	4					
42ND	505.00									-19.2	82.2	-1.2	-.5	2.9
		-3.0	38.8	2479	3002	-1.2	12.9	42	3					
43RD	517.50									-16.2	43.5	-.4	-.3	1.3
		-2.1	34.1	2479	3002	-.8	11.4	38	2					
PARA	530.00									-14.1	9.3	-.1	-.1	-.1
		-14.1	9.3	1856	1929	-7.6	4.8	-2	-3					
TOP	547.00									0.0	0.0	0.0	0.0	0.0

TABLE 7. SHEAR AND MOMENT DIAGRAMS : 1999 BROADWAY TOWER
WIND DIRECTION 50 CONFIGURATION A REFERENCE PRESSURE 22.0 PSF GUST FACTOR 1.32

FLOOR	HEIGHT	FORCE (KIPS) X	FORCE (KIPS) Y	AREA (SQ FT) X	AREA (SQ FT) Y	PRESSURE (PSF) X	PRESSURE (PSF) Y	ECCEN (FT) X	ECCEN (FT) Y	SHEAR (KIPS) X	SHEAR (KIPS) Y	MOMENT (1000-FT-KIPS) X	MOMENT (1000-FT-KIPS) Y	MOMENT (1000-FT-KIPS) Z
LBBY	0.00									377.3	1888.4	-526.6	112.2	92.4
		15.8	60.4	4067	3717	3.9	16.2	7	-2					
3RD	30.00									361.5	1828.0	-479.8	101.1	91.9
		4.2	25.7	1885	1928	2.2	13.3	21	-3					
4TH	42.50									357.3	1802.3	-448.1	96.6	91.4
		3.4	35.1	2252	2592	1.5	13.5	45	-4					
5TH	55.00									353.9	1767.2	-425.8	92.1	89.8
		3.7	42.8	2479	3002	1.5	14.3	56	-5					
6TH	67.50									350.3	1724.4	-404.0	87.7	87.4
		4.0	43.6	2479	3002	1.6	14.5	56	-5					
7TH	80.00									346.2	1680.8	-382.7	83.4	84.9
		4.4	44.3	2479	3002	1.8	14.8	56	-6					
8TH	92.50									341.8	1636.5	-362.0	79.1	82.4
		4.8	45.1	2479	3002	1.9	15.0	56	-6					
9TH	105.00									337.0	1591.4	-341.8	74.8	79.9
		5.2	45.9	2479	3002	2.1	15.3	56	-6					
10TH	117.50									331.9	1545.6	-322.2	70.7	77.3
		5.6	46.6	2479	3002	2.2	15.5	56	-7					
11TH	130.00									326.3	1498.9	-303.2	66.5	74.7
		5.9	47.4	2479	3002	2.4	15.8	56	-7					
12TH	142.50									320.3	1451.6	-284.7	62.5	72.0
		6.5	47.2	2479	3002	2.6	15.7	54	-7					
14TH	155.00									313.9	1404.4	-266.9	58.5	69.4
		7.0	46.5	2479	3002	2.8	15.5	53	-8					
15TH	167.50									306.8	1357.9	-249.6	54.7	66.9
		7.6	45.8	2479	3002	3.1	15.3	51	-8					
16TH	180.00									299.2	1312.1	-232.9	50.9	64.5
		8.2	45.2	2479	3002	3.3	15.0	49	-9					
17TH	192.50									291.0	1266.9	-216.8	47.2	62.2
		8.8	44.5	2479	3002	3.5	14.8	47	-9					
18TH	205.00									282.2	1222.4	-201.3	43.6	60.0
		9.4	43.9	2479	3002	3.8	14.6	45	-10					
19TH	217.50									272.9	1178.5	-186.3	40.1	58.0
		9.9	43.2	2479	3002	4.0	14.4	43	-10					
20TH	230.00									262.9	1135.3	-171.8	36.8	56.0
		10.4	43.2	2479	3002	4.2	14.4	42	-10					
21ST	242.50									252.6	1092.1	-157.9	33.6	54.1
		10.6	43.8	2479	3002	4.3	14.6	43	-10					
22ND	255.00									242.0	1048.3	-144.5	30.5	52.1
		10.8	44.4	2479	3002	4.4	14.8	44	-11					
23RD	267.50									231.1	1003.9	-131.7	27.5	50.0
		11.1	45.0	2479	3002	4.5	15.0	44	-11					
24TH	280.00									220.0	958.8	-119.4	24.7	47.9
		11.3	45.7	2479	3002	4.6	15.2	45	-11					
25TH	292.50									208.7	913.2	-107.7	22.0	45.7
		11.6	46.3	2479	3002	4.7	15.4	46	-11					
26TH	305.00									197.1	866.9	-96.6	19.5	43.5
		11.8	46.9	2479	3002	4.8	15.6	46	-12					
27TH	317.50									185.2	820.0	-86.0	17.1	41.1
		12.0	47.5	2479	3002	4.9	15.8	47	-12					

TABLE 7. SHEAR AND MOMENT DIAGRAMS : 1999 BROADWAY TOWER
WIND DIRECTION 50 CONFIGURATION A REFERENCE PRESSURE 22.0 PSF GUST FACTOR 1.32

FLOOR	HEIGHT	FORCE (KIPS) X	FORCE (KIPS) Y	AREA (SQ FT) X	AREA (SQ FT) Y	PRESSURE (PSF) X	PRESSURE (PSF) Y	ECCEN (FT) X	ECCEN (FT) Y	SHEAR (KIPS) X	SHEAR (KIPS) Y	MOMENT (1000-FT-KIPS) X	MOMENT (1000-FT-KIPS) Y	MOMENT (1000-FT-KIPS) Z
28TH	330.00									173.2	772.5	-76.1	14.8	38.8
		12.2	47.9	2479	3002	4.9	16.0	47	-12					
29TH	342.50									161.0	724.6	-66.7	12.8	36.4
		12.3	48.3	2479	3002	5.0	16.1	47	-12					
30TH	355.00									148.7	676.3	-58.0	10.8	34.0
		12.5	48.8	2479	3002	5.0	16.2	47	-12					
31ST	367.50									136.2	627.5	-49.8	9.0	31.5
		12.6	49.2	2479	3002	5.1	16.4	47	-12					
32ND	380.00									123.5	578.3	-42.3	7.4	29.0
		12.8	49.6	2479	3002	5.2	16.5	47	-12					
33RD	392.50									110.8	528.7	-35.4	6.0	26.5
		12.9	50.0	2479	3002	5.2	16.7	47	-12					
34TH	405.00									97.8	478.7	-29.1	4.6	24.0
		12.9	50.2	2479	3002	5.2	16.7	47	-12					
35TH	417.50									84.9	428.5	-23.4	3.5	21.5
		12.6	50.1	2479	3002	5.1	16.7	48	-12					
36TH	430.00									72.3	378.4	-18.4	2.5	18.9
		12.3	49.9	2479	3002	5.0	16.6	48	-12					
37TH	442.50									60.0	328.5	-13.9	1.7	16.4
		12.0	49.7	2479	3002	4.9	16.6	48	-12					
38TH	455.00									47.9	278.8	-10.1	1.0	13.9
		11.7	49.6	2479	3002	4.7	16.5	48	-11					
39TH	467.50									36.2	229.2	-7.0	.5	11.3
		11.5	49.4	2479	3002	4.6	16.5	48	-11					
40TH	480.00									24.7	179.9	-4.4	.1	8.8
		11.2	49.2	2479	3002	4.5	16.4	49	-11					
41ST	492.50									13.6	130.6	-2.5	-.1	6.3
		10.3	46.9	2479	3002	4.1	15.6	48	-11					
42ND	505.00									3.3	83.8	-1.1	-.2	3.9
		8.6	41.7	2479	3002	3.5	13.9	48	-10					
43RD	517.50									-5.3	42.0	-.3	-.2	1.8
		6.9	36.6	2479	3002	2.8	12.2	47	-9					
PARA	530.00									-12.2	5.5	-.0	-.1	.1
		-12.2	5.5	1856	1929	-6.6	2.8	2	5					
TOP	547.00									0.0	0.0	0.0	0.0	0.0

TABLE 7. SHEAR AND MOMENT DIAGRAMS : 1999 BROADWAY TOWER
WIND DIRECTION 60 CONFIGURATION A REFERENCE PRESSURE 22.0 PSF GUST FACTOR 1.32

FLOOR	HEIGHT	FORCE (KIPS) X	FORCE (KIPS) Y	AREA (SQ FT) X	AREA (SQ FT) Y	PRESSURE (PSF) X	PRESSURE (PSF) Y	ECCEN (FT) X	ECCEN (FT) Y	SHEAR (KIPS) X	SHEAR (KIPS) Y	MOMENT (1000-FT-KIPS) X	MOMENT (1000-FT-KIPS) Y	MOMENT (1000-FT-KIPS) Z
LBBY	0.00									907.1	1979.1	-554.7	264.1	110.3
		24.7	63.3	4067	3717	6.1	17.0	15	-6					
3RD	30.00									882.4	1915.8	-496.3	237.3	109.2
		9.7	27.9	1885	1928	5.2	14.5	25	-9					
4TH	42.50									872.7	1887.8	-472.5	226.3	108.4
		11.9	37.0	2252	2592	5.3	14.3	45	-15					
5TH	55.00									860.8	1850.8	-449.2	215.5	106.5
		14.5	44.4	2479	3002	5.8	14.8	56	-18					
6TH	67.50									846.3	1806.4	-426.3	204.8	103.8
		15.3	44.9	2479	3002	6.2	15.0	56	-19					
7TH	80.00									831.0	1761.6	-404.0	194.3	101.0
		16.1	45.4	2479	3002	6.5	15.1	56	-20					
8TH	92.50									814.9	1716.1	-382.3	184.1	98.1
		16.9	45.9	2479	3002	6.8	15.3	56	-20					
9TH	105.00									798.0	1670.2	-361.1	174.0	95.2
		17.7	46.5	2479	3002	7.1	15.5	55	-21					
10TH	117.50									780.3	1623.7	-340.5	164.1	92.3
		18.5	47.0	2479	3002	7.5	15.7	55	-22					
11TH	130.00									761.9	1576.7	-320.5	154.5	89.3
		19.3	47.5	2479	3002	7.8	15.8	55	-22					
12TH	142.50									742.6	1529.2	-301.1	145.1	86.2
		19.9	47.6	2479	3002	8.0	15.8	54	-22					
14TH	155.00									722.7	1481.6	-282.3	135.9	83.2
		20.4	47.4	2479	3002	8.2	15.8	52	-22					
15TH	167.50									702.3	1434.2	-264.1	127.0	80.3
		21.0	47.2	2479	3002	8.5	15.7	50	-22					
16TH	180.00									681.3	1387.0	-246.4	118.4	77.5
		21.5	47.0	2479	3002	8.7	15.7	48	-22					
17TH	192.50									659.8	1340.0	-229.4	110.0	74.8
		22.0	46.8	2479	3002	8.9	15.6	46	-22					
18TH	205.00									637.8	1293.2	-212.9	101.9	72.2
		22.5	46.7	2479	3002	9.1	15.5	44	-21					
19TH	217.50									615.3	1246.5	-197.1	94.0	69.6
		23.1	46.5	2479	3002	9.3	15.5	42	-21					
20TH	230.00									592.2	1200.0	-181.8	86.5	67.2
		23.6	46.6	2479	3002	9.5	15.5	41	-21					
21ST	242.50									568.6	1153.4	-167.1	79.2	64.7
		24.0	47.1	2479	3002	9.7	15.7	42	-21					
22ND	255.00									544.6	1106.2	-152.9	72.3	62.3
		24.4	47.6	2479	3002	9.9	15.9	42	-22					
23RD	267.50									520.2	1058.6	-139.4	65.6	59.7
		24.9	48.1	2479	3002	10.0	16.0	42	-22					
24TH	280.00									495.3	1010.5	-126.5	59.3	57.2
		25.3	48.6	2479	3002	10.2	16.2	43	-22					
25TH	292.50									470.0	961.9	-114.1	53.2	54.5
		25.8	49.1	2479	3002	10.4	16.4	43	-22					
26TH	305.00									444.2	912.8	-102.4	47.5	51.9
		26.2	49.6	2479	3002	10.6	16.5	43	-23					
27TH	317.50									418.0	863.2	-91.3	42.1	49.1
		26.5	50.0	2479	3002	10.7	16.7	43	-23					

TABLE 7. SHEAR AND MOMENT DIAGRAMS : 1999 BROADWAY TOWER
WIND DIRECTION 60 CONFIGURATION A REFERENCE PRESSURE 22.0 PSF GUST FACTOR 1.32

FLOOR	HEIGHT	FORCE (KIPS) X	FORCE (KIPS) Y	AREA (SQ FT) X	AREA (SQ FT) Y	PRESSURE (PSF) X	PRESSURE (PSF) Y	ECCEN (FT) X	ECCEN (FT) Y	SHEAR (KIPS) X	SHEAR (KIPS) Y	MOMENT (1000-FT-KIPS) X	MOMENT (1000-FT-KIPS) Y	MOMENT (1000-FT-KIPS) Z
28TH	330.00									391.5	813.2	-80.8	37.1	46.4
		26.4	50.2	2479	3002	10.6	16.7	43	-23					
29TH	342.50									365.1	763.0	-71.0	32.4	43.6
		26.2	50.4	2479	3002	10.6	16.8	44	-23					
30TH	355.00									338.9	712.6	-61.8	28.0	40.8
		26.1	50.6	2479	3002	10.5	16.9	44	-23					
31ST	367.50									312.8	662.0	-53.2	23.9	38.0
		26.0	50.9	2479	3002	10.5	16.9	44	-22					
32ND	380.00									286.8	611.1	-45.2	20.1	35.2
		25.9	51.1	2479	3002	10.4	17.0	44	-22					
33RD	392.50									260.9	560.0	-37.9	16.7	32.4
		25.8	51.3	2479	3002	10.4	17.1	44	-22					
34TH	405.00									235.1	508.7	-31.2	13.6	29.5
		25.7	51.5	2479	3002	10.4	17.2	44	-22					
35TH	417.50									209.5	457.2	-25.2	10.8	26.7
		25.6	51.8	2479	3002	10.3	17.3	45	-22					
36TH	430.00									183.9	405.4	-19.8	8.4	23.8
		25.5	52.0	2479	3002	10.3	17.3	46	-22					
37TH	442.50									158.4	353.3	-15.1	6.2	20.8
		25.4	52.3	2479	3002	10.2	17.4	46	-23					
38TH	455.00									133.1	301.1	-11.0	4.4	17.8
		25.3	52.5	2479	3002	10.2	17.5	47	-23					
39TH	467.50									107.8	248.5	-7.5	2.9	14.8
		25.2	52.8	2479	3002	10.2	17.6	48	-23					
40TH	480.00									82.6	195.7	-4.8	1.7	11.7
		25.1	53.0	2479	3002	10.1	17.7	48	-23					
41ST	492.50									57.5	142.7	-2.6	.8	8.5
		23.9	51.2	2479	3002	9.6	17.0	49	-23					
42ND	505.00									33.6	91.5	-1.2	.3	5.5
		21.3	46.6	2479	3002	8.6	15.5	49	-22					
43RD	517.50									12.3	44.9	-.3	-.0	2.7
		18.6	42.0	2479	3002	7.5	14.0	50	-22					
PARA	530.00									-6.3	3.0	-.0	-.1	.2
		-6.3	3.0	1856	1929	-3.4	1.5	14	30					
TOP	547.00									0.0	0.0	0.0	0.0	0.0

TABLE 7. SHEAR AND MOMENT DIAGRAMS : 1999 BROADWAY TOWER
WIND DIRECTION 70 CONFIGURATION A REFERENCE PRESSURE 22.0 PSF GUST FACTOR 1.32

FLOOR	HEIGHT	FORCE (KIPS) X	FORCE (KIPS) Y	AREA (SQ FT) X	AREA (SQ FT) Y	PRESSURE (PSF) X	PRESSURE (PSF) Y	ECCEN (FT) X	ECCEN (FT) Y	SHEAR (KIPS) X	SHEAR (KIPS) Y	MOMENT (1000-FT-KIPS) X	MOMENT (1000-FT-KIPS) Y	MOMENT (1000-FT-KIPS) Z
LBBY	0.00									1151.5	1972.1	-557.2	332.0	106.1
		30.5	67.5	4067	3717	7.5	18.2	17	-8					
3RD	30.00									1121.1	1904.6	-499.1	297.9	104.7
		13.1	29.2	1885	1928	7.0	15.2	24	-11					
4TH	42.50									1108.0	1875.4	-475.4	284.0	103.8
		17.7	35.9	2252	2592	7.8	13.9	39	-19					
5TH	55.00									1090.3	1839.5	-452.2	270.3	102.1
		21.3	41.0	2479	3002	8.6	13.7	47	-24					
6TH	67.50									1069.0	1798.4	-429.5	256.8	99.7
		22.1	42.0	2479	3002	8.9	14.0	47	-25					
7TH	80.00									1046.9	1756.5	-407.3	243.5	97.2
		22.9	42.9	2479	3002	9.2	14.3	47	-25					
8TH	92.50									1024.0	1713.5	-385.6	230.6	94.6
		23.7	43.9	2479	3002	9.6	14.6	47	-25					
9TH	105.00									1000.3	1669.7	-364.4	218.0	91.9
		24.5	44.8	2479	3002	9.9	14.9	47	-26					
10TH	117.50									975.8	1624.9	-343.8	205.6	89.2
		25.3	45.8	2479	3002	10.2	15.2	47	-26					
11TH	130.00									950.5	1579.1	-323.8	193.6	86.4
		26.1	46.7	2479	3002	10.5	15.6	47	-26					
12TH	142.50									924.4	1532.4	-304.4	181.8	83.5
		26.6	46.9	2479	3002	10.7	15.6	46	-26					
14TH	155.00									897.9	1485.5	-285.5	170.5	80.6
		26.9	46.7	2479	3002	10.8	15.6	45	-26					
15TH	167.50									871.0	1438.8	-267.2	159.4	77.8
		27.2	46.5	2479	3002	11.0	15.5	43	-25					
16TH	180.00									843.8	1392.3	-249.5	148.7	75.1
		27.6	46.3	2479	3002	11.1	15.4	42	-25					
17TH	192.50									816.2	1346.0	-232.4	138.3	72.5
		27.9	46.1	2479	3002	11.3	15.4	41	-25					
18TH	205.00									788.3	1299.9	-215.9	128.3	69.9
		28.2	46.0	2479	3002	11.4	15.3	39	-24					
19TH	217.50									760.1	1253.9	-199.9	118.6	67.4
		28.6	45.8	2479	3002	11.5	15.2	38	-24					
20TH	230.00									731.5	1208.1	-184.5	109.3	65.0
		28.9	46.0	2479	3002	11.7	15.3	37	-24					
21ST	242.50									702.6	1162.2	-169.7	100.3	62.6
		29.3	46.5	2479	3002	11.8	15.5	38	-24					
22ND	255.00									673.3	1115.6	-155.5	91.7	60.2
		29.7	47.1	2479	3002	12.0	15.7	38	-24					
23RD	267.50									643.7	1068.6	-141.8	83.5	57.7
		30.0	47.6	2479	3002	12.1	15.9	38	-24					
24TH	280.00									613.6	1020.9	-128.8	75.6	55.2
		30.4	48.2	2479	3002	12.3	16.1	38	-24					
25TH	292.50									583.2	972.8	-116.3	68.1	52.6
		30.8	48.7	2479	3002	12.4	16.2	38	-24					
26TH	305.00									552.4	924.0	-104.4	61.1	50.0
		31.2	49.3	2479	3002	12.6	16.4	38	-24					
27TH	317.50									521.3	874.7	-93.2	54.3	47.4
		31.4	49.8	2479	3002	12.7	16.6	38	-24					

TABLE 7 SHEAR AND MOMENT DIAGRAMS : 1999 BROADWAY TOWER
WIND DIRECTION 70 CONFIGURATION A REFERENCE PRESSURE 22.0 PSF GUST FACTOR 1.32

FLOOR	HEIGHT	FORCE (KIPS) X	FORCE (KIPS) Y	AREA (SQ FT) X	AREA (SQ FT) Y	PRESSURE (PSF) X	PRESSURE (PSF) Y	ECCEN (FT) X	ECCEN (FT) Y	SHEAR (KIPS) X	SHEAR (KIPS) Y	MOMENT (1000-FT-KIPS) X	MOMENT (1000-FT-KIPS) Y	MOMENT (1000-FT-KIPS) Z
28TH	330.00									489.9	824.9	-82.6	48.0	44.7
		31.4	50.1	2479	3002	12.7	16.7	38	-24					
29TH	342.50									458.5	774.9	-72.6	42.1	42.0
		31.3	50.3	2479	3002	12.6	16.8	38	-24					
30TH	355.00									427.2	724.5	-63.2	36.6	39.3
		31.3	50.6	2479	3002	12.6	16.9	39	-24					
31ST	367.50									395.9	673.9	-54.5	31.4	36.6
		31.2	50.9	2479	3002	12.6	17.0	39	-24					
32ND	380.00									364.7	623.0	-46.4	26.7	33.9
		31.2	51.2	2479	3002	12.6	17.1	39	-24					
33RD	392.50									333.5	571.8	-38.9	22.3	31.2
		31.1	51.5	2479	3002	12.6	17.1	39	-23					
34TH	405.00									302.3	520.3	-32.1	18.3	28.5
		31.1	51.9	2479	3002	12.6	17.3	39	-23					
35TH	417.50									271.2	468.5	-25.9	14.7	25.8
		31.2	52.4	2479	3002	12.6	17.5	39	-24					
36TH	430.00									240.0	416.1	-20.4	11.5	22.9
		31.3	52.9	2479	3002	12.6	17.6	40	-24					
37TH	442.50									208.7	363.2	-15.5	8.7	20.1
		31.4	53.5	2479	3002	12.7	17.8	41	-24					
38TH	455.00									177.4	309.7	-11.3	6.3	17.2
		31.4	54.0	2479	3002	12.7	18.0	41	-24					
39TH	467.50									145.9	255.7	-7.8	4.3	14.2
		31.5	54.5	2479	3002	12.7	18.2	42	-24					
40TH	480.00									114.4	201.2	-4.9	2.7	11.2
		31.6	55.1	2479	3002	12.7	18.3	42	-24					
41ST	492.50									82.9	146.1	-2.7	1.4	8.1
		30.6	52.8	2479	3002	12.3	17.6	42	-25					
42ND	505.00									52.3	93.3	-1.2	.6	5.1
		28.2	47.0	2479	3002	11.4	15.7	42	-25					
43RD	517.50									24.0	46.3	-.4	.1	2.4
		25.9	41.2	2479	3002	10.4	13.7	40	-25					
PARA	530.00									-1.8	5.0	-.0	-.0	.1
		-1.8	5.0	1856	1929	-1.0	2.6	15	5					
TOP	547.00									0.0	0.0	0.0	0.0	0.0

TABLE 7. SHEAR AND MOMENT DIAGRAMS : 1999 BROADWAY TOWER
WIND DIRECTION 80 CONFIGURATION A REFERENCE PRESSURE 22 0 PSF GUST FACTOR 1.32

FLOOR	HEIGHT	FORCE (KIPS) X	FORCE (KIPS) Y	AREA (SQ FT) X	AREA (SQ FT) Y	PRESSURE (PSF) X	PRESSURE (PSF) Y	ECCEN (FT) X	ECCEN (FT) Y	SHEAR (KIPS) X	SHEAR (KIPS) Y	MOMENT (1000-FT-KIPS) X	MOMENT (1000-FT-KIPS) Y	MOMENT (1000-FT-KIPS) Z
LBBY	0.00									1036.7	2097.8	-595.9	302.6	94.5
3RD	30.00	22.4	67.7	4067	3717	5.5	18.2	20	-7	1014 4	2030 1	-534.0	271.8	93.0
4TH	42.50	10 9	30.4	1885	1928	5.8	15.8	23	-8	1003.5	1999.7	-508.8	259.2	92.2
5TH	55.00	16.4	37.5	2252	2592	7.3	14.5	33	-14	987.1	1962.2	-484.0	246.7	90.8
6TH	67.50	19.9	41.7	2479	3002	8.0	13.9	38	-18	967.1	1920.5	-459.7	234.5	88.8
7TH	80.00	20.3	42.6	2479	3002	8.2	14.2	39	-19	946.8	1877.9	-436.0	222.6	86.8
8TH	92.50	20.6	43.5	2479	3002	8.3	14.5	40	-19	926.2	1834.4	-412.8	210.9	84.6
9TH	105.00	21.0	44.5	2479	3002	8.5	14.8	41	-19	905.2	1789.9	-390.1	199.4	82.4
10TH	117.50	21.4	45.4	2479	3002	8.6	15.1	41	-19	883.8	1744.6	-368.1	188.2	80.1
11TH	130.00	21.7	46.3	2479	3002	8.8	15.4	42	-20	862.1	1698.2	-346.5	177.3	77.8
12TH	142.50	22.1	47.2	2479	3002	8.9	15.7	43	-20	840.0	1651.0	-325.6	166.7	75.3
14TH	155 00	22.6	48.0	2479	3002	9.1	16.0	42	-20	817.4	1603.0	-305.3	156.3	72.8
15TH	167 50	23.2	48.6	2479	3002	9.4	16.2	41	-20	794.2	1554.4	-285.5	146.2	70.4
16TH	180.00	23.8	49.2	2479	3002	9.6	16.4	40	-19	770.4	1505.2	-266.4	136.5	67.9
17TH	192.50	24.5	49.9	2479	3002	9.9	16.6	39	-19	745.9	1455.3	-247.9	127.0	65.5
18TH	205.00	25.1	50.5	2479	3002	10.1	16.8	38	-19	720.8	1404.8	-230.0	117.8	63.1
19TH	217 50	25.7	51.1	2479	3002	10.4	17.0	38	-19	695.1	1353.6	-212.8	109.0	60.6
20TH	230.00	26.3	51.8	2479	3002	10.6	17.3	37	-19	668 8	1301.9	-196.2	100.4	58.2
21ST	242.50	26.7	52.2	2479	3002	10.8	17.4	36	-19	642.1	1249.7	-180.3	92.3	55.9
22ND	255.00	26.9	52.4	2479	3002	10.9	17.4	36	-19	615.2	1197.3	-165.0	84.4	53.5
23RD	267.50	27.1	52.5	2479	3002	10.9	17.5	36	-19	588.1	1144.8	-150.3	76.9	51.1
24TH	280.00	27.3	52.7	2479	3002	11.0	17.5	36	-19	560.8	1092.1	-136.3	69.7	48.7
25TH	292.50	27.5	52.8	2479	3002	11.1	17.6	36	-18	533.3	1039.3	-123.0	62.9	46.3
26TH	305.00	27.7	53.0	2479	3002	11.2	17.7	35	-18	505.6	986.3	-110.4	56.4	43.9
27TH	317.50	27.8	53.2	2479	3002	11.2	17.7	35	-18	477.8	933.1	-98.4	50.2	41.5
		28.0	53.5	2479	3002	11.3	17.8	35	-18					

TABLE 7. SHEAR AND MOMENT DIAGRAMS : 1999 BROADWAY TOWER
WIND DIRECTION 0° CONFIGURATION A REFERENCE PRESSURE 22.0 PSF GUST FACTOR 1.32

FLOOR	HEIGHT	FORCE (KIPS) X	FORCE (KIPS) Y	AREA (SQ FT) X	AREA (SQ FT) Y	PRESSURE (PSF) X	PRESSURE (PSF) Y	ECCEN (FT) X	ECCEN (FT) Y	SHEAR (KIPS) X	SHEAR (KIPS) Y	MOMENT (1000-FT-KIPS) X	MOMENT (1000-FT-KIPS) Y	MOMENT (1000-FT-KIPS) Z
28TH	330.00									449.8	879.6	-87.0	44.4	39.2
		28.1	54.0	2479	3002	11.3	18.0	35	-18					
29TH	342.50									421.7	825.6	-76.4	39.0	36.7
		28.2	54.6	2479	3002	11.4	18.2	35	-18					
30TH	355.00									393.5	771.0	-66.4	33.9	34.3
		28.3	55.2	2479	3002	11.4	18.4	35	-18					
31ST	367.50									365.1	715.9	-57.1	29.1	31.8
		28.4	55.7	2479	3002	11.5	18.6	36	-18					
32ND	380.00									336.7	660.2	-48.5	24.7	29.3
		28.5	56.3	2479	3002	11.5	18.7	36	-18					
33RD	392.50									308.2	603.9	-40.6	20.7	26.8
		28.6	56.8	2479	3002	11.6	18.9	36	-18					
34TH	405.00									279.6	547.0	-33.4	17.0	24.3
		28.7	57.1	2479	3002	11.6	19.0	36	-18					
35TH	417.50									250.9	489.9	-26.9	13.7	21.7
		28.7	56.9	2479	3002	11.6	19.0	36	-18					
36TH	430.00									222.1	433.0	-21.2	10.8	19.1
		28.8	56.7	2479	3002	11.6	18.9	36	-18					
37TH	442.50									193.3	376.3	-16.1	8.2	16.6
		28.8	56.5	2479	3002	11.6	18.8	36	-18					
38TH	455.00									164.5	319.8	-11.7	5.9	14.0
		28.9	56.3	2479	3002	11.6	18.8	36	-18					
39TH	467.50									135.7	263.5	-8.1	4.1	11.5
		28.9	56.1	2479	3002	11.7	18.7	36	-18					
40TH	480.00									106.8	207.4	-5.2	2.5	8.9
		28.9	55.9	2479	3002	11.7	18.6	36	-19					
41ST	492.50									77.8	151.5	-2.9	1.4	6.4
		28.1	53.4	2479	3002	11.3	17.8	36	-19					
42ND	505.00									49.7	98.1	-1.4	.6	4.0
		26.2	47.9	2479	3002	10.6	16.0	34	-19					
43RD	517.50									23.6	50.2	-.4	.1	1.8
		24.2	42.4	2479	3002	9.8	14.1	33	-19					
PARA	530.00									-.6	7.9	-.1	-.0	-.0
		-.6	7.9	1856	1929	-.3	4.1	-6	-0					
TOP	547.00									0.0	0.0	0.0	0.0	0.0

TABLE 7. SHEAR AND MOMENT DIAGRAMS : 1999 BROADWAY TOWER
WIND DIRECTION 90 CONFIGURATION A REFERENCE PRESSURE 22 0 PSF GUST FACTOR 1.32

FLOOR	HEIGHT	FORCE (KIPS) X	FORCE (KIPS) Y	AREA (SQ FT) X	AREA (SQ FT) Y	PRESSURE (PSF) X	PRESSURE (PSF) Y	ECCEN (FT) X	ECCEN (FT) Y	SHEAR (KIPS) X	SHEAR (KIPS) Y	MOMENT (1000-FT-KIPS) X	MOMENT (1000-FT-KIPS) Y	MOMENT (1000-FT-KIPS) Z
LBBY	0.00									867.1	2376.3	-673 6	255.6	96.6
		23.1	79.0	4067	3717	5.7	21.3	19	-6					
3RD	30.00									844.0	2297.3	-603.5	230.0	94.9
		9.2	35.2	1885	1928	4.9	18.3	21	-6					
4TH	42.50									834.8	2262.1	-575.0	219.5	94.1
		14.3	40.8	2252	2592	6.4	15.7	29	-10					
5TH	55.00									820.5	2221.3	-547.0	209.1	92.8
		17.6	44.3	2479	3002	7.1	14.7	34	-14					
6TH	67.50									802.9	2177.1	-519.5	199.0	91.1
		17.5	46.0	2479	3002	7.1	15.3	35	-13					
7TH	80.00									785.4	2131.1	-492.6	189.1	89.2
		17.4	47 7	2479	3002	7.0	15.9	36	-13					
8TH	92.50									768.0	2083.4	-466.3	179.4	87.3
		17.2	49.4	2479	3002	6.9	16.5	37	-13					
9TH	105 00									750.8	2034.0	-440.5	169.9	85.2
		17.1	51.1	2479	3002	6.9	17.0	38	-13					
10TH	117.50									733.7	1982.9	-415.4	160.6	83.0
		16.9	52.8	2479	3002	6.8	17.6	39	-12					
11TH	130.00									716.8	1930.1	-391.0	151.5	80.8
		16.8	54.5	2479	3002	6.8	18.2	40	-12					
12TH	142.50									700.0	1875.6	-367.2	142.7	78.4
		17.2	55.5	2479	3002	6.9	18.5	40	-12					
14TH	155.00									682.8	1820.1	-344.1	134.0	76.0
		17.7	56.2	2479	3002	7.1	18.7	39	-12					
15TH	167.50									665.1	1763.9	-321.7	125.6	73.6
		18.3	56.8	2479	3002	7.4	18.9	39	-12					
16TH	180.00									646.8	1707.1	-300.0	117.4	71.2
		18.8	57.5	2479	3002	7.6	19.2	38	-12					
17TH	192.50									628.0	1649.5	-279.0	109.4	68.7
		19.4	58.2	2479	3002	7.8	19.4	38	-13					
18TH	205.00									608.7	1591.4	-258.7	101.7	66.3
		19.9	58.9	2479	3002	8.0	19.6	37	-13					
19TH	217.50									588.8	1532.5	-239.2	94.2	63.8
		20.5	59.5	2479	3002	8.3	19.8	37	-13					
20TH	230.00									568.3	1473.0	-220.4	87.0	61.4
		20 9	60.0	2479	3002	8.4	20.0	37	-13					
21ST	242.50									547.4	1412.9	-202.4	80.0	58.9
		21.2	60.4	2479	3002	8.6	20.1	37	-13					
22ND	255.00									526.2	1352.6	-185.1	73.3	56.4
		21.6	60.7	2479	3002	8.7	20.2	37	-13					
23RD	267.50									504.6	1291.9	-168.6	66.9	53.9
		21.9	61.0	2479	3002	8.8	20.3	37	-13					
24TH	280.00									482.7	1230.9	-152.8	60.7	51.3
		22.2	61.3	2479	3002	9.0	20.4	37	-13					
25TH	292.50									460.5	1169.6	-137.8	54.8	48.8
		22.6	61.6	2479	3002	9.1	20.5	37	-14					
26TH	305.00									437.9	1108.0	-123.6	49.2	46.2
		22.9	61.9	2479	3002	9.2	20.6	37	-14					
27TH	317.50									415.0	1046.0	-110.1	43.8	43.6
		23.2	62.2	2479	3002	9.4	20.7	37	-14					

TABLE 7. SHEAR AND MOMENT DIAGRAMS : 1999 BROADWAY TOWER
WIND DIRECTION 90 CONFIGURATION A REFERENCE PRESSURE 22.0 PSF GUST FACTOR 1.32

FLOOR	HEIGHT	FORCE (KIPS) X	FORCE (KIPS) Y	AREA (SQ FT) X	AREA (SQ FT) Y	PRESSURE (PSF) X	PRESSURE (PSF) Y	ECCEN (FT) X	ECCEN (FT) Y	SHEAR (KIPS) X	SHEAR (KIPS) Y	MOMENT (1000-FT-KIPS) X	MOMENT (1000-FT-KIPS) Y	MOMENT (1000-FT-KIPS) Z
28TH	330.00									391.8	983.8	-97.4	38.8	40.9
		23.6	62.2	2479	3002	9.5	20.7	37	-14					
29TH	342.50									368.2	921.6	-85.5	34.1	38.3
		23.9	62.3	2479	3002	9.6	20.8	37	-14					
30TH	355.00									344.3	859.3	-74.4	29.6	35.6
		24.2	62.4	2479	3002	9.8	20.8	37	-14					
31ST	367.50									320.1	796.9	-64.0	25.4	33.0
		24.5	62.4	2479	3002	9.9	20.8	37	-14					
32ND	380.00									295.6	734.5	-54.5	21.6	30.3
		24.9	62.5	2479	3002	10.0	20.8	37	-15					
33RD	392.50									270.7	672.0	-45.7	18.1	27.7
		25.2	62.5	2479	3002	10.2	20.8	36	-15					
34TH	405.00									245.6	609.5	-37.7	14.8	25.0
		25.4	62.5	2479	3002	10.2	20.8	36	-15					
35TH	417.50									220.2	547.0	-30.4	11.9	22.4
		25.5	62.5	2479	3002	10.3	20.8	36	-15					
36TH	430.00									194.7	484.5	-24.0	9.3	19.8
		25.5	62.4	2479	3002	10.3	20.8	36	-15					
37TH	442.50									169.2	422.1	-18.3	7.1	17.1
		25.5	62.3	2479	3002	10.3	20.8	36	-15					
38TH	455.00									143.7	359.8	-13.4	5.1	14.5
		25.6	62.2	2479	3002	10.3	20.7	36	-15					
39TH	467.50									118.1	297.6	-9.3	3.5	11.8
		25.6	62.1	2479	3002	10.3	20.7	36	-15					
40TH	480.00									92.4	235.5	-6.0	2.1	9.2
		25.7	62.0	2479	3002	10.4	20.7	36	-15					
41ST	492.50									66.7	173.4	-3.4	1.2	6.6
		24.8	59.5	2479	3002	10.0	19.8	36	-15					
42ND	505.00									41.9	114.0	-1.6	.5	4.1
		22.8	53.7	2479	3002	9.2	17.9	35	-15					
43RD	517.50									19.1	60.3	-.6	.1	1.9
		20.8	47.9	2479	3002	8.4	15.9	34	-15					
PARA	530.00									-1.7	12.4	-.1	-.0	-.0
		-1.7	12.4	1856	1929	-.9	6.4	-4	-1					
TOP	547.00									0.0	0.0	0.0	0.0	0.0

TABLE 7. SHEAR AND MOMENT DIAGRAMS : 1999 BROADWAY TOWER
WIND DIRECTION 190 CONFIGURATION A REFERENCE PRESSURE 22.0 PSF GUST FACTOR 1.32

FLOOR	HEIGHT	FORCE (KIPS) X	FORCE (KIPS) Y	AREA (SQ FT) X	AREA (SQ FT) Y	PRESSURE (PSF) X	PRESSURE (PSF) Y	ECCEN (FT) X	ECCEN (FT) Y	SHEAR (KIPS) X	SHEAR (KIPS) Y	MOMENT (1000-FT-KIPS) X	MOMENT (1000-FT-KIPS) Y	MOMENT (1000-FT-KIPS) Z
LBBY	0.00									707.2	2604.2	-745.6	201.4	92.1
		26.5	79.5	4067	3717	6.5	21.4	16	-5					
3RD	30.00									680.7	2524.7	-668.7	180.6	90.7
		10.0	36.9	1885	1928	5.3	19.2	17	-5					
4TH	42.50									670.7	2487.8	-637.3	172.2	90.0
		14.9	43.1	2252	2592	6.6	16.6	23	-8					
5TH	55.00									655.9	2444.7	-606.5	163.9	88.9
		17.7	46.8	2479	3002	7.2	15.6	26	-10					
6TH	67.50									638.1	2397.9	-576.2	155.8	87.5
		17.1	48.7	2479	3002	6.9	16.2	28	-10					
7TH	80.00									621.0	2349.2	-546.6	147.9	86.0
		16.5	50.7	2479	3002	6.6	16.9	29	-9					
8TH	92.50									604.6	2298.5	-517.5	140.3	84.4
		15.9	52.6	2479	3002	6.4	17.5	30	-9					
9TH	105.00									588.7	2245.9	-489.1	132.8	82.7
		15.2	54.6	2479	3002	6.1	18.2	32	-9					
10TH	117.50									573.5	2191.3	-461.4	125.5	80.8
		14.6	56.5	2479	3002	5.9	18.8	33	-9					
11TH	130.00									558.8	2134.8	-434.3	118.5	78.8
		14.0	58.5	2479	3002	5.6	19.5	34	-8					
12TH	142.50									544.8	2076.3	-408.0	111.6	76.7
		14.0	59.8	2479	3002	5.6	19.9	34	-8					
14TH	155.00									530.9	2016.5	-382.4	104.8	74.5
		14.2	60.8	2479	3002	5.7	20.2	34	-8					
15TH	167.50									516.6	1955.8	-357.6	98.3	72.3
		14.5	61.8	2479	3002	5.9	20.6	34	-8					
16TH	180.00									502.1	1894.0	-333.6	91.9	70.1
		14.8	62.8	2479	3002	6.0	20.9	34	-8					
17TH	192.50									487.3	1831.2	-310.3	85.7	67.8
		15.0	63.8	2479	3002	6.1	21.3	34	-8					
18TH	205.00									472.3	1767.4	-287.8	79.8	65.5
		15.3	64.8	2479	3002	6.2	21.6	34	-8					
19TH	217.50									457.0	1702.5	-266.1	73.9	63.2
		15.6	65.8	2479	3002	6.3	21.9	34	-8					
20TH	230.00									441.4	1636.7	-245.2	68.3	60.9
		15.8	66.5	2479	3002	6.4	22.2	34	-8					
21ST	242.50									425.6	1570.2	-225.2	62.9	58.5
		16.0	66.9	2479	3002	6.5	22.3	34	-8					
22ND	255.00									409.6	1503.2	-206.0	57.7	56.0
		16.3	67.3	2479	3002	6.6	22.4	35	-8					
23RD	267.50									393.3	1435.9	-187.6	52.7	53.6
		16.5	67.8	2479	3002	6.7	22.6	35	-9					
24TH	280.00									376.8	1368.1	-170.1	47.9	51.0
		16.8	68.2	2479	3002	6.8	22.7	35	-9					
25TH	292.50									360.0	1300.0	-153.4	43.3	48.5
		17.0	68.6	2479	3002	6.9	22.8	35	-9					
26TH	305.00									343.0	1231.4	-137.6	38.9	45.9
		17.3	69.0	2479	3002	7.0	23.0	36	-9					
27TH	317.50									325.7	1162.4	-122.6	34.7	43.3
		17.5	69.3	2479	3002	7.1	23.1	36	-9					

TABLE 7. SHEAR AND MOMENT DIAGRAMS : 1999 BROADWAY TOWER
WIND DIRECTION 190 CONFIGURATION A REFERENCE PRESSURE 22.0 PSF GUST FACTOR 1.32

FLOOR	HEIGHT	FORCE (KIPS) X	FORCE (KIPS) Y	AREA (SQ FT) X	AREA (SQ FT) Y	PRESSURE (PSF) X	PRESSURE (PSF) Y	ECCEN (FT) X	ECCEN (FT) Y	SHEAR (KIPS) X	SHEAR (KIPS) Y	MOMENT (1000-FT-KIPS) X	MOMENT (1000-FT-KIPS) Y	MOMENT (1000-FT-KIPS) Z
28TH	330.00									308.2	1093.2	-108.5	30.7	40.7
		17.9	69.3	2479	3002	7.2	23.1	36	-9					
29TH	342.50									290.3	1023.9	-95.3	27.0	38.0
		18.2	69.3	2479	3002	7.3	23.1	36	-9					
30TH	355.00									272.1	954.6	-82.9	23.5	35.4
		18.6	69.3	2479	3002	7.5	23.1	36	-10					
31ST	367.50									253.6	885.3	-71.4	20.2	32.7
		18.9	69.4	2479	3002	7.6	23.1	36	-10					
32ND	380.00									234.7	815.9	-60.8	17.1	30.1
		19.2	69.4	2479	3002	7.8	23.1	36	-10					
33RD	392.50									215.4	746.5	-51.0	14.3	27.4
		19.6	69.4	2479	3002	7.9	23.1	36	-10					
34TH	405.00									195.9	677.1	-42.1	11.7	24.7
		19.9	69.4	2479	3002	8.0	23.1	35	-10					
35TH	417.50									176.0	607.7	-34.1	9.4	22.1
		20.1	69.1	2479	3002	8.1	23.0	35	-10					
36TH	430.00									155.9	538.6	-26.9	7.3	19.4
		20.3	68.9	2479	3002	8.2	23.0	35	-10					
37TH	442.50									135.6	469.7	-20.6	5.5	16.8
		20.5	68.7	2479	3002	8.3	22.9	35	-10					
38TH	455.00									115.1	401.0	-15.2	4.0	14.2
		20.7	68.4	2479	3002	8.4	22.8	35	-10					
39TH	467.50									94.3	332.6	-10.6	2.6	11.6
		21.0	68.2	2479	3002	8.5	22.7	34	-11					
40TH	480.00									73.4	264.4	-6.9	1.6	9.1
		21.2	68.0	2479	3002	8.5	22.7	34	-11					
41ST	492.50									52.2	196.4	-4.0	.8	6.5
		20.6	65.4	2479	3002	8.3	21.8	34	-11					
42ND	505.00									31.6	130.9	-2.0	.3	4.1
		18.9	59.8	2479	3002	7.6	19.9	33	-11					
43RD	517.50									12.7	71.1	-.7	.0	1.9
		17.2	54.2	2479	3002	6.9	18.1	33	-10					
PARA	530.00									-4.5	16.9	-.1	-.0	-.1
		-4.5	16.9	1856	1929	-2.4	8.8	-3	-1					
TOP	547.00									0.0	0.0	0.0	0.0	0.0

TABLE 7. SHEAR AND MOMENT DIAGRAMS : 1999 BROADWAY TOWER
WIND DIRECTION 110 CONFIGURATION A REFERENCE PRESSURE 22.0 PSF GUST FACTOR 1.32

FLOOR	HEIGHT	FORCE (KIPS) X	FORCE (KIPS) Y	AREA (SQ FT) X	AREA (SQ FT) Y	PRESSURE (PSF) X	PRESSURE (PSF) Y	ECCEN (FT) X	ECCEN (FT) Y	SHEAR (KIPS) X	SHEAR (KIPS) Y	MOMENT (1000-FT-KIPS) X	MOMENT (1000-FT-KIPS) Y	MOMENT (1000-FT-KIPS) Z
LBBY	0.00									571.9	2716.1	-793.2	146.4	79.6
3RD	30.00	37.0	79.0	4067	3717	9.1	21.2	11	-5	534.9	2637.1	-712.9	129.8	78.5
4TH	42.50	13.0	37.1	1885	1928	6.9	19.2	12	-4	521.9	2600.0	-680.2	123.2	78.1
5TH	55.00	17.2	42.0	2252	2592	7.6	16.2	15	-6	504.8	2558.0	-648.0	116.8	77.3
6TH	67.50	19.6	45.0	2479	3002	7.9	15.0	17	-7	485.2	2513.0	-616.3	110.6	76.4
7TH	80.00	18.4	47.3	2479	3002	7.4	15.8	19	-7	466.8	2465.7	-585.1	104.6	75.4
8TH	92.50	17.2	49.6	2479	3002	7.0	16.5	21	-7	449.5	2416.0	-554.6	98.9	74.2
9TH	105.00	16.1	51.9	2479	3002	6.5	17.3	23	-7	433.5	2364.1	-524.8	93.4	72.9
10TH	117.50	14.9	54.2	2479	3002	6.0	18.1	24	-7	418.6	2309.9	-495.5	88.1	71.5
11TH	130.00	13.7	56.5	2479	3002	5.5	18.8	26	-6	404.9	2253.3	-467.0	82.9	70.0
12TH	142.50	12.5	58.8	2479	3002	5.0	19.6	27	-6	392.4	2194.5	-439.2	77.9	68.3
14TH	155.00	12.0	60.3	2479	3002	4.8	20.1	28	-6	380.4	2134.2	-412.2	73.1	66.6
15TH	167.50	11.8	61.4	2479	3002	4.8	20.5	28	-5	368.6	2072.8	-385.9	68.4	64.8
16TH	180.00	11.6	62.6	2479	3002	4.7	20.8	29	-5	357.0	2010.2	-360.4	63.9	62.9
17TH	192.50	11.4	63.7	2479	3002	4.6	21.2	29	-5	345.6	1946.5	-335.6	59.5	61.0
18TH	205.00	11.2	64.9	2479	3002	4.5	21.6	29	-5	334.5	1881.6	-311.7	55.3	59.0
19TH	217.50	10.9	66.0	2479	3002	4.4	22.0	30	-5	323.5	1815.6	-288.6	51.1	57.0
20TH	230.00	10.7	67.2	2479	3002	4.3	22.4	30	-5	312.8	1748.4	-266.3	47.2	54.9
21ST	242.50	10.8	68.0	2479	3002	4.4	22.7	30	-5	302.0	1680.4	-244.9	43.3	52.8
22ND	255.00	11.1	68.6	2479	3002	4.5	22.9	31	-5	290.9	1611.8	-224.3	39.6	50.7
23RD	267.50	11.4	69.2	2479	3002	4.6	23.1	31	-5	279.5	1542.6	-204.6	36.0	48.5
24TH	280.00	11.8	69.8	2479	3002	4.7	23.3	31	-5	267.7	1472.7	-185.8	32.6	46.2
25TH	292.50	12.1	70.4	2479	3002	4.9	23.5	31	-5	255.6	1402.3	-167.8	29.4	44.0
26TH	305.00	12.4	71.0	2479	3002	5.0	23.7	31	-5	243.2	1331.3	-150.7	26.2	41.7
27TH	317.50	12.7	71.6	2479	3002	5.1	23.9	32	-6	230.5	1259.6	-134.5	23.3	39.3
		13.0	72.2	2479	3002	5.3	24.0	32	-6					

TABLE 7. SHEAR AND MOMENT DIAGRAMS : 1999 BROADWAY TOWER
WIND DIRECTION 110 CONFIGURATION A REFERENCE PRESSURE 22.0 PSF GUST FACTOR 1.32

FLOOR	HEIGHT	FORCE (KIPS) X	FORCE (KIPS) Y	AREA (SQ FT) X	AREA (SQ FT) Y	PRESSURE (PSF) X	PRESSURE (PSF) Y	ECCEN (FT) X	ECCEN (FT) Y	SHEAR (KIPS) X	SHEAR (KIPS) Y	MOMENT (1000-FT-KIPS) X	MOMENT (1000-FT-KIPS) Y	MOMENT (1000-FT-KIPS) Z
28TH	330.00									217.5	1187.5	-119.2	20.5	37.0
		13.3	72.6	2479	3002	5.4	24.2	32	-6					
29TH	342.50									204.1	1114.9	-104.6	17.8	34.6
		13.6	73.0	2479	3002	5.5	24.3	32	-6					
30TH	355.00									190.5	1041.8	-91.3	15.4	32.2
		13.9	73.4	2479	3002	5.6	24.5	31	-6					
31ST	367.50									176.5	968.4	-78.8	13.1	29.8
		14.2	73.9	2479	3002	5.7	24.6	31	-6					
32ND	380.00									162.3	894.5	-67.1	11.0	27.4
		14.5	74.3	2479	3002	5.9	24.7	31	-6					
33RD	392.50									147.8	820.3	-56.4	9.0	25.0
		14.8	74.7	2479	3002	6.0	24.9	31	-6					
34TH	405.00									132.9	745.6	-46.6	7.3	22.6
		15.0	75.0	2479	3002	6.1	25.0	31	-6					
35TH	417.50									117.9	670.6	-37.8	5.7	20.1
		15.0	75.1	2479	3002	6.0	25.0	31	-6					
36TH	430.00									102.9	595.5	-29.9	4.3	17.7
		15.0	75.2	2479	3002	6.0	25.1	31	-6					
37TH	442.50									87.9	520.3	-22.9	3.1	15.4
		14.9	75.3	2479	3002	6.0	25.1	30	-6					
38TH	455.00									73.0	444.9	-16.9	2.1	13.0
		14.9	75.4	2479	3002	6.0	25.1	30	-6					
39TH	467.50									58.1	369.5	-11.8	1.3	10.6
		14.9	75.6	2479	3002	6.0	25.2	30	-6					
40TH	480.00									43.3	294.0	-7.6	.7	8.3
		14.8	75.7	2479	3002	6.0	25.2	29	-6					
41ST	492.50									28.4	218.3	-4.4	.2	6.0
		14.2	73.0	2479	3002	5.7	24.3	29	-6					
42ND	505.00									14.2	145.3	-2.2	-.0	3.8
		12.8	66.8	2479	3002	5.2	22.3	29	-5					
43RD	517.50									1.4	78.4	-.8	-.1	1.8
		11.3	60.6	2479	3002	4.6	20.2	28	-5					
PARA	530.00									-9.9	17.8	-.2	-.1	.0
		-9.9	17.8	1856	1929	-5.3	9.2	2	1					
TOP	547.00									0.0	0.0	0.0	0.0	0.0

TABLE 7. SHEAR AND MOMENT DIAGRAMS : 1999 BROADWAY TOWER
WIND DIRECTION 120 CONFIGURATION A REFERENCE PRESSURE 22 0 PSF GUST FACTOR 1.32

FLOOR	HEIGHT	FORCE (KIPS) X	FORCE (KIPS) Y	AREA (SQ FT) X	AREA (SQ FT) Y	PRESSURE (PSF) X	PRESSURE (PSF) Y	ECCEN (FT) X	ECCEN (FT) Y	SHEAR (KIPS) X	SHEAR (KIPS) Y	MOMENT (1000-FT-KIPS) X	MOMENT (1000-FT-KIPS) Y	MOMENT (1000-FT-KIPS) Z
LBBY	0.00									557.8	2478.4	-745.7	136.6	55.2
3RD	30.00	39.1	61.9	4067	3717	9.4	16.7	9	-6	519.7	2416.5	-672.3	120.5	54.4
4TH	42.50	14.1	28.9	1885	1928	7.5	15.0	11	-5	505.5	2387.6	-642.3	114.1	54.0
5TH	55.00	17.5	34.5	2252	2592	7.8	13.3	14	-7	488.0	2353.1	-612.6	107.9	53.4
6TH	67.50	19.6	37.5	2479	3002	7.9	12.5	14	-8	468.4	2315.7	-583.4	101.9	52.7
7TH	80.00	18.8	39.1	2479	3002	7.6	13.0	15	-7	449.7	2276.6	-554.7	96.1	51.9
8TH	92.50	18.0	40.7	2479	3002	7.3	13.6	16	-7	431.7	2235.9	-526.5	90.6	51.2
9TH	105.00	17.2	42.3	2479	3002	6.9	14.1	17	-7	414.5	2193.6	-498.9	85.3	50.4
10TH	117.50	16.4	43.9	2479	3002	6.6	14.6	17	-6	398.1	2149.7	-471.7	80.3	49.5
11TH	130.00	15.6	45.5	2479	3002	6.3	15.2	18	-6	382.5	2104.2	-445.1	75.4	48.6
12TH	142.50	14.8	47.1	2479	3002	6.0	15.7	18	-6	367.8	2057.0	-419.1	70.7	47.7
14TH	155.00	14.1	49.1	2479	3002	5.7	16.4	19	-5	353.6	2007.9	-393.7	66.2	46.7
15TH	167.50	13.6	51.2	2479	3002	5.5	17.1	19	-5	340.1	1956.7	-368.9	61.9	45.6
16TH	180.00	13.0	53.3	2479	3002	5.2	17.8	20	-5	327.1	1903.5	-344.8	57.7	44.5
17TH	192.50	12.4	55.4	2479	3002	5.0	18.5	20	-5	314.7	1848.1	-321.4	53.7	43.3
18TH	205.00	11.8	57.5	2479	3002	4.8	19.2	21	-4	302.9	1790.6	-298.6	49.8	42.1
19TH	217.50	11.2	59.6	2479	3002	4.5	19.9	21	-4	291.6	1731.0	-276.6	46.1	40.8
20TH	230.00	10.7	61.7	2479	3002	4.3	20.6	21	-4	281.0	1669.2	-255.4	42.5	39.5
21ST	242.50	10.4	63.2	2479	3002	4.2	21.0	22	-4	270.6	1606.1	-234.9	39.1	38.1
22ND	255.00	10.6	64.0	2479	3002	4.3	21.3	22	-4	260.0	1542.0	-215.2	35.8	36.6
23RD	267.50	10.7	64.9	2479	3002	4.3	21.6	23	-4	249.3	1477.1	-196.3	32.6	35.1
24TH	280.00	10.8	65.8	2479	3002	4.4	21.9	24	-4	238.5	1411.3	-178.3	29.5	33.5
25TH	292.50	10.9	66.6	2479	3002	4.4	22.2	24	-4	227.6	1344.7	-161.1	26.6	31.8
26TH	305.00	11.1	67.5	2479	3002	4.5	22.5	25	-4	216.5	1277.2	-144.7	23.8	30.1
27TH	317.50	11.2	68.4	2479	3002	4.5	22.8	25	-4	205.4	1208.8	-129.1	21.2	28.3
		11.3	69.1	2479	3002	4.6	23.0	26	-4					

TABLE 7. SHEAR AND MOMENT DIAGRAMS : 1999 BROADWAY TOWER
WIND DIRECTION 120 CONFIGURATION A REFERENCE PRESSURE 22.0 PSF GUST FACTOR 1.32

FLOOR	HEIGHT	FORCE (KIPS) X	FORCE (KIPS) Y	AREA (SQ FT) X	AREA (SQ FT) Y	PRESSURE (PSF) X	PRESSURE (PSF) Y	ECCEN (FT) X	ECCEN (FT) Y	SHEAR (KIPS) X	SHEAR (KIPS) Y	MOMENT (1000-FT-KIPS) X	MOMENT (1000-FT-KIPS) Y	MOMENT (1000-FT-KIPS) Z
28TH	330.00									194.0	1139.7	-114.5	18.7	26.5
		11.5	69.7	2479	3002	4.6	23.2	26	-4					
29TH	342.50									182.5	1070.0	-100.6	16.4	24.7
		11.7	70.2	2479	3002	4.7	23.4	25	-4					
30TH	355.00									170.8	999.9	-87.7	14.1	22.8
		11.9	70.7	2479	3002	4.8	23.6	25	-4					
31ST	367.50									159.0	929.2	-75.7	12.1	21.0
		12.1	71.2	2479	3002	4.9	23.7	25	-4					
32ND	380.00									146.9	857.9	-64.5	10.2	19.1
		12.3	71.8	2479	3002	4.9	23.9	25	-4					
33RD	392.50									134.6	786.2	-54.2	8.4	17.3
		12.4	72.3	2479	3002	5.0	24.1	25	-4					
34TH	405.00									122.2	713.9	-44.8	6.8	15.4
		12.7	72.5	2479	3002	5.1	24.2	25	-4					
35TH	417.50									109.5	641.4	-36.4	5.4	13.6
		13.0	72.2	2479	3002	5.2	24.1	24	-4					
36TH	430.00									96.5	569.1	-28.8	4.1	11.8
		13.3	71.9	2479	3002	5.4	24.0	23	-4					
37TH	442.50									83.2	497.2	-22.1	2.9	10.0
		13.7	71.6	2479	3002	5.5	23.9	22	-4					
38TH	455.00									69.5	425.6	-16.4	2.0	8.4
		14.0	71.3	2479	3002	5.6	23.8	22	-4					
39TH	467.50									55.5	354.2	-11.5	1.2	6.8
		14.3	71.0	2479	3002	5.8	23.7	21	-4					
40TH	480.00									41.2	283.2	-7.5	.6	5.2
		14.7	70.7	2479	3002	5.9	23.6	20	-4					
41ST	492.50									26.5	212.5	-4.4	.2	3.8
		14.0	68.6	2479	3002	5.7	22.9	19	-4					
42ND	505.00									12.5	143.8	-2.2	-.1	2.4
		12.1	64.2	2479	3002	4.9	21.4	19	-4					
43RD	517.50									.4	79.6	-.8	-.1	1.1
		10.2	59.8	2479	3002	4.1	19.9	19	-3					
PARA	530.00									-9.9	19.8	-.2	-.1	-.1
		-9.9	19.8	1856	1929	-5.3	10.3	-5	-2					
TOP	547.00									0.0	0.0	0.0	0.0	0.0

TABLE 7. SHEAR AND MOMENT DIAGRAMS : 1999 BROADWAY TOWER
WIND DIRECTION 130 CONFIGURATION A REFERENCE PRESSURE 22 0 PSF GUST FACTOR 1.32

FLOOR	HEIGHT	FORCE (KIPS) X	FORCE (KIPS) Y	AREA (SQ FT) X	AREA (SQ FT) Y	PRESSURE (PSF) X	PRESSURE (PSF) Y	ECCEN (FT) X	ECCEN (FT) Y	SHEAR (KIPS) X	SHEAR (KIPS) Y	MOMENT (1000-FT-KIPS) X	MOMENT (1000-FT-KIPS) Y	MOMENT (1000-FT-KIPS) Z
LBBY	0.00									823.0	1635.3	-530.4	211.6	27.5
		48.2	34.1	4067	3717	11.8	9.2	5	-7					
3RD	30.00									774.8	1601.2	-481.9	187.7	26.9
		19.2	14.4	1885	1928	10.2	7.5	6	-8					
4TH	42.50									755.6	1586.9	-461.9	178.1	26.7
		22.6	16.5	2252	2592	10.0	6.3	7	-9					
5TH	55.00									733.0	1570.4	-442.2	168.8	26.4
		24.7	17.7	2479	3002	10.0	5.9	6	-8					
6TH	67.50									708.3	1552.7	-422.7	159.8	26.1
		24.0	18.4	2479	3002	9.7	6.1	6	-8					
7TH	80.00									684.3	1534.3	-403.4	151.1	25.8
		23.3	19.1	2479	3002	9.4	6.4	7	-8					
8TH	92 50									661.0	1515.2	-384.3	142.7	25.5
		22.6	19.9	2479	3002	9.1	6.6	7	-8					
9TH	105.00									638.4	1495.3	-365.5	134.6	25.2
		21.9	20.6	2479	3002	8.8	6.9	7	-8					
10TH	117.50									616.6	1474.7	-347.0	126.7	24.8
		21.1	21.3	2479	3002	8.5	7.1	8	-8					
11TH	130.00									595.4	1453.3	-328.7	119.1	24.5
		20.4	22.1	2479	3002	8.2	7.4	8	-7					
12TH	142.50									575.0	1431.3	-310.6	111.8	24.2
		19.9	23.7	2479	3002	8.0	7.9	9	-7					
14TH	155.00									555.1	1407.6	-292.9	104.8	23.8
		19.4	25.8	2479	3002	7.8	8.6	10	-7					
15TH	167.50									535.7	1381.8	-275.5	97.9	23.4
		19.0	27.8	2479	3002	7.7	9.3	10	-7					
16TH	180.00									516.7	1354.0	-258.4	91.4	23.0
		18.5	29.9	2479	3002	7.5	10.0	11	-7					
17TH	192.50									498.1	1324.1	-241.6	85.0	22.6
		18.1	31.9	2479	3002	7.3	10.6	11	-6					
18TH	205.00									480.1	1292.1	-225.3	78.9	22.1
		17.6	34.0	2479	3002	7.1	11.3	12	-6					
19TH	217.50									462.4	1258.2	-209.3	73.0	21.6
		17.2	36.0	2479	3002	6.9	12.0	12	-6					
20TH	230.00									445.2	1222.1	-193.8	67.3	21.0
		17.0	37.9	2479	3002	6.9	12.6	13	-6					
21ST	242.50									428.2	1184.2	-178.8	61.9	20.5
		17.2	39.6	2479	3002	7.0	13.2	13	-6					
22ND	255.00									410.9	1144.7	-164.2	56.6	19.8
		17.4	41.2	2479	3002	7.0	13.7	14	-6					
23RD	267.50									393.5	1103.4	-150.2	51.6	19.2
		17.6	42.9	2479	3002	7.1	14.3	14	-6					
24TH	280.00									375.9	1060.5	-136.7	46.8	18.4
		17.8	44.6	2479	3002	7.2	14.8	15	-6					
25TH	292.50									358.2	1016.0	-123.7	42.2	17.7
		17.9	46.2	2479	3002	7.2	15.4	15	-6					
26TH	305.00									340.2	969.7	-111.3	37.8	16.9
		18.1	47.9	2479	3002	7.3	16.0	16	-6					
27TH	317.50									322.1	921.9	-99.4	33.7	16.0
		18.3	49.4	2479	3002	7.4	16.4	16	-6					

TABLE 7. SHEAR AND MOMENT DIAGRAMS : 1999 BROADWAY TOWER
WIND DIRECTION 130 CONFIGURATION A REFERENCE PRESSURE 22.0 PSF GUST FACTOR 1.32

FLOOR	HEIGHT	FORCE (KIPS) X	FORCE (KIPS) Y	AREA (SQ FT) X	AREA (SQ FT) Y	PRESSURE (PSF) X	PRESSURE (PSF) Y	ECCEN (FT) X	ECCEN (FT) Y	SHEAR (KIPS) X	SHEAR (KIPS) Y	MOMENT (1000-FT-KIPS) X	MOMENT (1000-FT-KIPS) Y	MOMENT (1000-FT-KIPS) Z
28TH	330.00									303.8	872.5	-88.2	29.8	15.1
		18.5	50.4	2479	3002	7.5	16.8	16	-6					
29TH	342.50									285.3	822.1	-77.6	26.1	14.2
		18.7	51.5	2479	3002	7.6	17.1	16	-6					
30TH	355.00									266.6	770.6	-67.7	22.7	13.2
		18.9	52.5	2479	3002	7.6	17.5	17	-6					
31ST	367.50									247.6	718.1	-58.4	19.5	12.2
		19.1	53.6	2479	3002	7.7	17.8	17	-6					
32ND	380.00									228.5	664.5	-49.7	16.5	11.2
		19.3	54.6	2479	3002	7.8	18.2	17	-6					
33RD	392.50									209.2	609.9	-41.8	13.7	10.2
		19.5	55.7	2479	3002	7.9	18.5	17	-6					
34TH	405.00									189.7	554.2	-34.5	11.2	9.1
		19.7	56.3	2479	3002	7.9	18.8	17	-6					
35TH	417.50									170.0	497.9	-27.9	9.0	8.0
		19.8	56.3	2479	3002	8.0	18.7	17	-6					
36TH	430.00									150.2	441.6	-22.1	7.0	6.9
		20.0	56.2	2479	3002	8.1	18.7	16	-6					
37TH	442.50									130.2	385.4	-16.9	5.2	5.9
		20.1	56.2	2479	3002	8.1	18.7	16	-6					
38TH	455.00									110.1	329.2	-12.4	3.7	4.9
		20.2	56.1	2479	3002	8.2	18.7	15	-5					
39TH	467.50									89.9	273.1	-8.7	2.5	4.0
		20.3	56.1	2479	3002	8.2	18.7	14	-5					
40TH	480.00									69.6	217.0	-5.6	1.5	3.1
		20.5	56.0	2479	3002	8.3	18.7	14	-5					
41ST	492.50									49.1	161.0	-3.2	.8	2.2
		19.7	54.1	2479	3002	8.0	18.0	14	-5					
42ND	505.00									29.4	106.9	-1.6	.3	1.3
		17.8	49.7	2479	3002	7.2	16.6	13	-5					
43RD	517.50									11.6	57.2	-.5	.0	.6
		15.9	45.3	2479	3002	6.4	15.1	13	-5					
PARA	530.00									-4.3	11.9	-.1	-.0	-.1
		-4.3	11.9	1856	1929	-2.3	6.2	-4	-2					
TOP	547.00									0.0	0.0	0.0	0.0	0.0

TABLE 7. SHEAR AND MOMENT DIAGRAMS : 1999 BROADWAY TOWER
WIND DIRECTION 140 CONFIGURATION A REFERENCE PRESSURE 22.0 PSF GUST FACTOR 1.32

FLOOR	HEIGHT	FORCE (KIPS) X	FORCE (KIPS) Y	AREA (SQ FT) X	AREA (SQ FT) Y	PRESSURE (PSF) X	PRESSURE (PSF) Y	ECCEN (FT) X	ECCEN (FT) Y	SHEAR (KIPS) X	SHEAR (KIPS) Y	MOMENT (1000-FT-KIPS) X	MOMENT (1000-FT-KIPS) Y	MOMENT (1000-FT-KIPS) Z
LBBY	0.00									759.6	741.2	-271.1	202.5	10.0
		35.7	5.2	4067	3717	8.8	1.4	0	-3					
3RD	30.00									723.9	736.0	-248.9	180.2	9.9
		15.4	1.4	1885	1928	8.2	.7	0	-2					
4TH	42.50									708.4	734.5	-239.7	171.3	9.9
		18.7	.7	2252	2592	8.3	.3	-0	5					
5TH	55.00									689.7	733.8	-230.6	162.5	10.0
		20.6	.6	2479	3002	8.3	.2	-0	9					
6TH	67.50									669.0	733.2	-221.4	154.0	10.2
		20.2	1.1	2479	3002	8.2	.4	-0	8					
7TH	80.00									648.8	732.1	-212.2	145.8	10.4
		19.8	1.7	2479	3002	8.0	.6	-1	7					
8TH	92.50									629.0	730.4	-203.1	137.8	10.5
		19.3	2.2	2479	3002	7.8	.7	-1	7					
9TH	105.00									609.7	728.2	-194.0	130.1	10.6
		18.9	2.8	2479	3002	7.6	.9	-1	6					
10TH	117.50									590.8	725.4	-184.9	122.6	10.7
		18.5	3.3	2479	3002	7.5	1.1	-1	5					
11TH	130.00									572.3	722.1	-175.8	115.3	10.8
		18.0	3.8	2479	3002	7.3	1.3	-1	5					
12TH	142.50									554.3	718.3	-166.8	108.3	10.9
		17.8	5.1	2479	3002	7.2	1.7	-1	3					
14TH	155.00									536.4	713.2	-157.9	101.4	11.0
		17.7	6.6	2479	3002	7.2	2.2	-0	1					
15TH	167.50									518.7	706.6	-149.0	94.8	11.0
		17.6	8.2	2479	3002	7.1	2.7	0	-1					
16TH	180.00									501.1	698.5	-140.2	88.5	11.0
		17.5	9.7	2479	3002	7.1	3.2	1	-3					
17TH	192.50									483.6	688.8	-131.6	82.3	10.9
		17.4	11.3	2479	3002	7.0	3.7	3	-4					
18TH	205.00									466.2	677.5	-123.0	76.4	10.8
		17.3	12.8	2479	3002	7.0	4.3	4	-5					
19TH	217.50									448.9	664.7	-114.6	70.7	10.7
		17.2	14.3	2479	3002	6.9	4.8	5	-6					
20TH	230.00									431.7	650.4	-106.4	65.2	10.5
		17.2	15.9	2479	3002	6.9	5.3	6	-7					
21ST	242.50									414.5	634.5	-98.4	59.9	10.3
		17.4	17.3	2479	3002	7.0	5.8	7	-7					
22ND	255.00									397.2	617.2	-90.6	54.8	10.1
		17.5	18.8	2479	3002	7.1	6.3	8	-7					
23RD	267.50									379.7	598.4	-83.0	49.9	9.8
		17.7	20.3	2479	3002	7.1	6.8	9	-8					
24TH	280.00									362.0	578.1	-75.6	45.3	9.5
		17.8	21.7	2479	3002	7.2	7.2	9	-8					
25TH	292.50									344.2	556.3	-68.5	40.9	9.1
		18.0	23.2	2479	3002	7.2	7.7	10	-8					
26TH	305.00									326.2	533.1	-61.7	36.7	8.7
		18.1	24.7	2479	3002	7.3	8.2	11	-8					
27TH	317.50									308.1	508.4	-55.2	32.7	8.3
		18.2	25.9	2479	3002	7.3	8.6	11	-8					

TABLE 7. SHEAR AND MOMENT DIAGRAMS : 1999 BROADWAY TOWER
WIND DIRECTION 140 CONFIGURATION A REFERENCE PRESSURE 22.0 PSF GUST FACTOR 1.32

FLOOR	HEIGHT	FORCE (KIPS) X	FORCE (KIPS) Y	AREA (SQ FT) X	AREA (SQ FT) Y	PRESSURE (PSF) X	PRESSURE (PSF) Y	ECCEN (FT) X	ECCEN (FT) Y	SHEAR (KIPS) X	SHEAR (KIPS) Y	MOMENT (1000-FT-KIPS) X	MOMENT (1000-FT-KIPS) Y	MOMENT (1000-FT-KIPS) Z
28TH	330.00									290.0	482.5	-49.0	29.0	7.9
		18.1	26.7	2479	3002	7.3	8.9	11	-8					
29TH	342.50									271.8	455.8	-43.1	25.5	7.5
		18.1	27.5	2479	3002	7.3	9.2	11	-7					
30TH	355.00									253.7	428.3	-37.6	22.2	7.0
		18.0	28.2	2479	3002	7.3	9.4	11	-7					
31ST	367.50									235.7	400.1	-32.4	19.1	6.6
		18.0	29.0	2479	3002	7.2	9.7	11	-7					
32ND	380.00									217.7	371.1	-27.6	16.3	6.1
		17.9	29.7	2479	3002	7.2	9.9	12	-7					
33RD	392.50									199.8	341.3	-23.2	13.7	5.6
		17.9	30.5	2479	3002	7.2	10.2	12	-7					
34TH	405.00									182.0	310.8	-19.1	11.3	5.2
		17.9	31.1	2479	3002	7.2	10.4	12	-7					
35TH	417.50									164.1	279.7	-15.4	9.1	4.7
		18.1	31.4	2479	3002	7.3	10.5	12	-7					
36TH	430.00									146.0	248.3	-12.1	7.2	4.2
		18.3	31.7	2479	3002	7.4	10.6	12	-7					
37TH	442.50									127.7	216.6	-9.2	5.5	3.7
		18.5	32.0	2479	3002	7.4	10.7	12	-7					
38TH	455.00									109.3	184.6	-6.7	4.0	3.2
		18.6	32.3	2479	3002	7.5	10.8	12	-7					
39TH	467.50									90.6	152.3	-4.6	2.8	2.6
		18.8	32.6	2479	3002	7.6	10.9	12	-7					
40TH	480.00									71.8	119.7	-2.9	1.8	2.1
		19.0	32.9	2479	3002	7.7	11.0	12	-7					
41ST	492.50									52.8	86.8	-1.6	1.0	1.6
		18.6	31.7	2479	3002	7.5	10.5	12	-7					
42ND	505.00									34.2	55.2	-.7	.4	1.0
		17.5	28.4	2479	3002	7.0	9.5	12	-7					
43RD	517.50									16.7	26.8	-.2	.1	.6
		16.3	25.1	2479	3002	6.6	8.4	11	-7					
FARA	530.00									.4	1.7	-.0	.0	.2
		.4	1.7	1856	1929	.2	.9	85	-21					
TOP	547.00									0.0	0.0	0.0	0.0	0.0

TABLE 7. SHEAR AND MOMENT DIAGRAMS : 1999 BROADWAY TOWER
WIND DIRECTION 150 CONFIGURATION A REFERENCE PRESSURE 22.0 PSF GUST FACTOR 1.32

FLOOR	HEIGHT	FORCE (KIPS) X	FORCE (KIPS) Y	AREA (SQ FT) X	AREA (SQ FT) Y	PRESSURE (PSF) X	PRESSURE (PSF) Y	ECCEN (FT) X	ECCEN (FT) Y	SHEAR (KIPS) X	SHEAR (KIPS) Y	MOMENT (1000-FT-KIPS) X	MOMENT (1000-FT-KIPS) Y	MOMENT (1000-FT-KIPS) Z
LBBY	0.00									639.4	84.7	-69.9	175.8	2.0
3RD	30.00	29.2	-14.6	4067	3717	7.2	-3.9	3	6	610.2	99.4	-67.2	157.1	2.2
4TH	42.50	12.4	-7.1	1885	1928	6.6	-3.7	2	4	597.8	106.5	-65.9	149.5	2.2
5TH	55.00	14.9	-7.7	2252	2592	6.6	-3.0	4	7	582.8	114.2	-64.5	142.2	2.4
6TH	67.50	16.2	-7.7	2479	3002	6.5	-2.6	4	9	566.7	121.9	-63.0	135.0	2.6
7TH	80.00	15.9	-7.5	2479	3002	6.4	-2.5	4	9	550.8	129.4	-61.5	128.0	2.7
8TH	92.50	15.6	-7.3	2479	3002	6.3	-2.4	4	9	535.1	136.8	-59.8	121.2	2.9
9TH	105.00	15.3	-7.1	2479	3002	6.2	-2.4	4	9	519.8	143.9	-58.1	114.6	3.1
10TH	117.50	15.0	-6.9	2479	3002	6.1	-2.3	4	9	504.8	150.8	-56.2	108.2	3.2
11TH	130.00	14.8	-6.7	2479	3002	6.0	-2.2	4	9	490.0	157.4	-54.3	102.0	3.4
12TH	142.50	14.5	-6.5	2479	3002	5.8	-2.2	4	9	475.6	163.9	-52.3	96.0	3.6
14TH	155.00	14.4	-5.8	2479	3002	5.8	-1.9	4	9	461.2	169.7	-50.2	90.1	3.7
15TH	167.50	14.4	-4.9	2479	3002	5.8	-1.6	3	8	446.8	174.6	-48.0	84.4	3.8
16TH	180.00	14.4	-4.1	2479	3002	5.8	-1.4	2	6	432.4	178.7	-45.8	78.9	3.9
17TH	192.50	14.4	-3.2	2479	3002	5.8	-1.1	1	5	418.1	181.8	-43.6	73.6	4.0
18TH	205.00	14.4	-2.3	2479	3002	5.8	-.8	0	3	403.7	184.2	-41.3	68.5	4.0
19TH	217.50	14.3	-1.4	2479	3002	5.8	-.5	0	1	389.4	185.6	-39.0	63.5	4.1
20TH	230.00	14.3	-.6	2479	3002	5.8	-.2	-0	-0	375.0	186.2	-36.7	58.7	4.0
21ST	242.50	14.3	.2	2479	3002	5.8	.1	0	-2	360.7	186.0	-34.3	54.1	4.0
22ND	255.00	14.3	.9	2479	3002	5.8	.3	0	-3	346.4	185.1	-32.0	49.7	4.0
23RD	267.50	14.4	1.5	2479	3002	5.8	.5	0	-4	332.0	183.6	-29.7	45.5	3.9
24TH	280.00	14.4	2.2	2479	3002	5.8	.7	1	-5	317.6	181.4	-27.4	41.4	3.8
25TH	292.50	14.4	2.8	2479	3002	5.8	.9	1	-6	303.3	178.6	-25.2	37.5	3.8
26TH	305.00	14.4	3.5	2479	3002	5.8	1.2	2	-7	288.9	175.1	-23.0	33.8	3.7
27TH	317.50	14.4	4.2	2479	3002	5.8	1.4	2	-8	274.5	170.9	-20.8	30.3	3.5
		14.4	4.9	2479	3002	5.8	1.6	3	-8					

TABLE 7. SHEAR AND MOMENT DIAGRAMS : 1999 BROADWAY TOWER
WIND DIRECTION 150 CONFIGURATION A REFERENCE PRESSURE 22.0 PSF GUST FACTOR 1.32

FLOOR	HEIGHT	FORCE (KIPS) X	FORCE (KIPS) Y	AREA (SQ FT) X	AREA (SQ FT) Y	PRESSURE (PSF) X	PRESSURE (PSF) Y	ECCEN (FT) X	ECCEN (FT) Y	SHEAR (KIPS) X	SHEAR (KIPS) Y	MOMENT (1000-FT-KIPS) X	MOMENT (1000-FT-KIPS) Y	MOMENT (1000-FT-KIPS) Z
28TH	330.00									260.1	166.1	-18.7	27.0	3.4
		14.6	5.7	2479	3002	5.9	1.9	3	-9					
29TH	342.50									245.4	160.4	-16.7	23.8	3.3
		14.8	6.4	2479	3002	6.0	2.1	4	-9					
30TH	355.00									230.6	154.0	-14.7	20.8	3.1
		15.0	7.2	2479	3002	6.1	2.4	4	-9					
31ST	367.50									215.6	146.7	-12.8	18.1	2.9
		15.2	8.0	2479	3002	6.2	2.7	5	-9					
32ND	380.00									200.3	138.7	-11.0	15.5	2.8
		15.4	8.8	2479	3002	6.2	2.9	5	-9					
33RD	392.50									184.9	129.9	-9.4	13.0	2.6
		15.7	9.6	2479	3002	6.3	3.2	6	-9					
34TH	405.00									169.2	120.3	-7.8	10.8	2.4
		15.9	10.3	2479	3002	6.4	3.4	6	-9					
35TH	417.50									153.3	110.0	-6.3	8.8	2.2
		16.1	10.8	2479	3002	6.5	3.6	6	-9					
36TH	430.00									137.2	99.2	-5.0	7.0	2.0
		16.4	11.3	2479	3002	6.6	3.8	6	-9					
37TH	442.50									120.8	87.9	-3.9	5.4	1.8
		16.7	11.8	2479	3002	6.7	3.9	6	-9					
38TH	455.00									104.1	76.2	-2.8	4.0	1.5
		16.9	12.3	2479	3002	6.8	4.1	6	-9					
39TH	467.50									87.2	63.9	-2.0	2.8	1.3
		17.2	12.7	2479	3002	6.9	4.2	6	-9					
40TH	480.00									69.9	51.2	-1.3	1.8	1.1
		17.5	13.2	2479	3002	7.1	4.4	6	-8					
41ST	492.50									52.5	37.9	-.7	1.0	.9
		17.3	13.3	2479	3002	7.0	4.4	7	-9					
42ND	505.00									35.2	24.7	-.3	.5	.6
		16.5	12.6	2479	3002	6.7	4.2	7	-9					
43RD	517.50									18.7	12.0	-.1	.2	.4
		15.7	12.0	2479	3002	6.3	4.0	7	-10					
PARA	530.00									3.0	-.0	.0	.0	.1
		3.0	-.0	1856	1929	1.6	-.0	-0	-48					
TOP	547.00									0.0	0.0	0.0	0.0	0.0

TABLE 7. SHEAR AND MOMENT DIAGRAMS : 1999 BROADWAY TOWER
WIND DIRECTION 160 CONFIGURATION A REFERENCE PRESSURE 22.0 PSF GUST FACTOR 1.32

FLOOR	HEIGHT	FORCE (KIPS) X	FORCE (KIPS) Y	AREA (SQ FT) X	AREA (SQ FT) Y	PRESSURE (PSF) X	PRESSURE (PSF) Y	ECCEN (FT) X	ECCEN (FT) Y	SHEAR (KIPS) X	SHEAR (KIPS) Y	MOMENT (1000-FT-KIPS) X	MOMENT (1000-FT-KIPS) Y	MOMENT (1000-FT-KIPS) Z
LBBY	0.00									766.9	-524.3	128.9	210.0	-1.7
		35.4	-23.4	4067	3717	8.7	-6.3	4	6					
3RD	30.00									731.5	-501.0	113.6	187.6	-1.3
		14.7	-10.7	1885	1928	7.8	-5.5	2	3					
4TH	42.50									716.8	-490.3	107.4	178.5	-1.3
		16.6	-11.8	2252	2592	7.4	-4.6	4	5					
5TH	55.00									700.2	-478.5	101.3	169.6	-1.2
		17.8	-12.6	2479	3002	7.2	-4.2	5	7					
6TH	67.50									682.4	-465.9	95.4	161.0	-1.0
		17.8	-13.0	2479	3002	7.2	-4.3	5	7					
7TH	80.00									664.7	-452.9	89.7	152.6	-.8
		17.7	-13.4	2479	3002	7.2	-4.5	5	6					
8TH	92.50									646.9	-439.5	84.1	144.4	-.6
		17.7	-13.8	2479	3002	7.1	-4.6	5	6					
9TH	105.00									629.2	-425.7	78.7	136.4	-.4
		17.7	-14.3	2479	3002	7.1	-4.8	5	6					
10TH	117.50									611.5	-411.4	73.4	128.7	-.3
		17.7	-14.7	2479	3002	7.1	-4.9	5	6					
11TH	130.00									593.9	-396.7	68.4	121.1	-.1
		17.6	-15.1	2479	3002	7.1	-5.0	5	6					
12TH	142.50									576.2	-381.6	63.5	113.8	.1
		17.6	-15.2	2479	3002	7.1	-5.1	4	5					
14TH	155.00									558.6	-366.4	58.8	106.7	.2
		17.6	-15.2	2479	3002	7.1	-5.1	4	4					
15TH	167.50									541.0	-351.2	54.4	99.8	.4
		17.6	-15.2	2479	3002	7.1	-5.1	3	4					
16TH	180.00									523.4	-336.0	50.1	93.2	.5
		17.6	-15.1	2479	3002	7.1	-5.0	3	3					
17TH	192.50									505.8	-320.9	46.0	86.8	.6
		17.6	-15.1	2479	3002	7.1	-5.0	2	2					
18TH	205.00									488.3	-305.8	42.0	80.5	.6
		17.5	-15.1	2479	3002	7.1	-5.0	1	2					
19TH	217.50									470.7	-290.7	38.3	74.5	.7
		17.5	-15.1	2479	3002	7.1	-5.0	1	1					
20TH	230.00									453.2	-275.6	34.8	68.8	.7
		17.6	-15.0	2479	3002	7.1	-5.0	0	0					
21ST	242.50									435.7	-260.6	31.4	63.2	.7
		17.7	-14.8	2479	3002	7.1	-4.9	0	1					
22ND	255.00									418.0	-245.8	28.3	57.9	.7
		17.8	-14.7	2479	3002	7.2	-4.9	0	1					
23RD	267.50									400.2	-231.1	25.3	52.8	.7
		17.9	-14.6	2479	3002	7.2	-4.9	0	1					
24TH	280.00									382.2	-216.5	22.5	47.9	.8
		18.0	-14.4	2479	3002	7.3	-4.8	0	1					
25TH	292.50									364.2	-202.1	19.9	43.2	.8
		18.2	-14.3	2479	3002	7.3	-4.8	0	1					
26TH	305.00									346.0	-187.8	17.4	38.8	.8
		18.3	-14.1	2479	3002	7.4	-4.7	0	1					
27TH	317.50									327.7	-173.6	15.2	34.6	.8
		18.4	-13.9	2479	3002	7.4	-4.6	0	1					

TABLE 7. SHEAR AND MOMENT DIAGRAMS : 1999 BROADWAY TOWER
WIND DIRECTION 160 CONFIGURATION A REFERENCE PRESSURE 22.9 PSF GUST FACTOR 1.32

FLOOR	HEIGHT	FORCE (KIPS) X	FORCE (KIPS) Y	AREA (SQ FT) X	AREA (SQ FT) Y	PRESSURE (PSF) X	PRESSURE (PSF) Y	ECCEN (FT) X	ECCEN (FT) Y	SHEAR (KIPS) X	SHEAR (KIPS) Y	MOMENT (1000-FT-KIPS) X	MOMENT (1000-FT-KIPS) Y	MOMENT (1000-FT-KIPS) Z
28TH	330.00									309.3	-159.7	13.1	39.6	.8
		19.7	-13.6	2479	3002	7.5	-4.5	0	0					
29TH	342.50									290.6	-146.1	11.2	26.8	.8
		18.9	-13.2	2479	3002	7.6	-4.4	-0	-0					
30TH	355.00									271.7	-132.9	9.4	23.3	.8
		19.2	-12.8	2479	3002	7.7	-4.3	-1	-1					
31ST	367.50									252.5	-120.1	7.9	20.0	.8
		19.4	-12.5	2479	3002	7.8	-4.2	-1	-1					
32ND	380.00									233.1	-107.6	6.4	17.0	.8
		19.6	-12.1	2479	3002	7.9	-4.0	-1	-2					
33RD	392.50									213.5	-95.5	5.2	14.2	.7
		19.9	-11.7	2479	3002	8.0	-3.9	-1	-2					
34TH	405.00									193.6	-83.7	4.0	11.7	.6
		20.1	-11.4	2479	3002	8.1	-3.8	-1	-3					
35TH	417.50									173.5	-72.4	3.1	9.4	.6
		20.1	-11.0	2479	3002	8.1	-3.7	-1	-3					
36TH	430.00									153.4	-61.3	2.2	7.3	.5
		20.2	-10.7	2479	3002	8.1	-3.6	-1	-2					
37TH	442.50									133.2	-50.6	1.5	5.5	.5
		20.2	-10.4	2479	3002	8.2	-3.5	-1	-2					
38TH	455.00									113.0	-40.2	1.0	4.0	.4
		20.3	-10.0	2479	3002	8.2	-3.3	-1	-2					
39TH	467.50									92.8	-30.2	.5	2.7	.3
		20.3	-9.7	2479	3002	8.2	-3.2	-1	-2					
40TH	480.00									72.5	-20.6	.2	1.7	.3
		20.4	-9.3	2479	3002	8.2	-3.1	-1	-2					
41ST	492.50									52.1	-11.2	.0	.9	.2
		19.6	-8.0	2479	3002	7.9	-2.7	-1	-3					
42ND	505.00									32.5	-3.2	-.1	.4	.2
		17.6	-5.4	2479	3002	7.1	-1.8	-1	-4					
43RD	517.50									14.9	2.2	-.1	.1	.1
		15.7	-2.8	2479	3002	6.3	-.9	-1	-5					
PARA	530.00									-.8	5.0	-.0	-.0	.0
		-.8	5.0	1856	1929	-.4	2.6	1	0					
TOP	547.00									0.0	0.0	0.0	0.0	0.0

TABLE 7. SHEAR AND MOMENT DIAGRAMS : 1999 BROADWAY TOWER
WIND DIRECTION 170 CONFIGURATION A REFERENCE PRESSURE 22.0 PSF GUST FACTOR 1.32

FLOOR	HEIGHT	FORCE (KIPS) X	FORCE (KIPS) Y	AREA (SQ FT) X	AREA (SQ FT) Y	PRESSURE (PSF) X	PRESSURE (PSF) Y	ECCEN (FT) X	ECCEN (FT) Y	SHEAR (KIPS) X	SHEAR (KIPS) Y	MOMENT (1000-FT-KIPS) X	MOMENT (1000-FT-KIPS) Y	MOMENT (1000-FT-KIPS) Z
LBBY	0.00									538.7	-567.9	177.5	145.2	-.3
		27.5	-12.5	4067	3717	6.8	-3.4	5	10					
3RD	30.00									511.2	-555.3	160.7	129.4	-.0
		11.1	-6.0	1885	1928	5.9	-3.1	4	7					
4TH	42.50									500.1	-549.4	153.8	123.1	.1
		12.8	-6.6	2252	2592	5.7	-2.6	4	8					
5TH	55.00									487.3	-542.7	146.9	116.9	.2
		13.8	-7.2	2479	3002	5.6	-2.4	5	9					
6TH	67.50									473.5	-535.6	140.2	110.9	.4
		13.5	-7.5	2479	3002	5.5	-2.5	5	9					
7TH	80.00									460.0	-528.0	133.6	105.1	.5
		13.3	-7.9	2479	3002	5.4	-2.6	5	8					
8TH	92.50									446.7	-520.1	127.0	99.4	.7
		13.0	-8.3	2479	3002	5.2	-2.8	5	8					
9TH	105.00									433.7	-511.9	120.6	93.9	.8
		12.7	-8.6	2479	3002	5.1	-2.9	5	7					
10TH	117.50									420.9	-503.2	114.2	88.6	1.0
		12.5	-9.0	2479	3002	5.0	-3.0	5	6					
11TH	130.00									408.5	-494.3	108.0	83.4	1.1
		12.2	-9.4	2479	3002	4.9	-3.1	5	6					
12TH	142.50									396.2	-484.9	101.9	78.3	1.2
		12.1	-9.7	2479	3002	4.9	-3.2	4	5					
14TH	155.00									384.1	-475.2	95.9	73.5	1.3
		12.0	-9.9	2479	3002	4.9	-3.3	3	3					
15TH	167.50									372.1	-465.3	90.0	68.7	1.4
		12.0	-10.2	2479	3002	4.8	-3.4	2	2					
16TH	180.00									360.1	-455.1	84.2	64.2	1.4
		11.9	-10.5	2479	3002	4.8	-3.5	1	1					
17TH	192.50									348.2	-444.6	78.6	59.7	1.4
		11.8	-10.8	2479	3002	4.8	-3.6	-0	-1					
18TH	205.00									336.4	-433.9	73.1	55.5	1.4
		11.8	-11.0	2479	3002	4.8	-3.7	-2	-2					
19TH	217.50									324.6	-422.8	67.8	51.3	1.4
		11.7	-11.3	2479	3002	4.7	-3.8	-3	-3					
20TH	230.00									312.9	-411.5	62.5	47.3	1.3
		11.8	-11.9	2479	3002	4.7	-4.0	-3	-3					
21ST	242.50									301.1	-399.5	57.5	43.5	1.2
		11.9	-12.9	2479	3002	4.8	-4.3	-3	-3					
22ND	255.00									289.2	-386.6	52.6	39.8	1.2
		12.1	-13.9	2479	3002	4.9	-4.6	-3	-2					
23RD	267.50									277.1	-372.8	47.8	36.3	1.1
		12.2	-14.8	2479	3002	4.9	-4.9	-3	-2					
24TH	280.00									264.9	-357.9	43.3	32.9	1.0
		12.4	-15.8	2479	3002	5.0	-5.3	-2	-2					
25TH	292.50									252.5	-342.1	38.9	29.7	1.0
		12.5	-16.8	2479	3002	5.1	-5.6	-2	-2					
26TH	305.00									240.0	-325.4	34.7	26.6	.9
		12.7	-17.7	2479	3002	5.1	-5.9	-2	-2					
27TH	317.50									227.3	-307.6	30.7	23.7	.9
		12.8	-18.5	2479	3002	5.2	-6.2	-2	-1					

TABLE 7. SHEAR AND MOMENT DIAGRAMS : 1999 BROADWAY TOWER
WIND DIRECTION 170 CONFIGURATION A REFERENCE PRESSURE 22.0 PSF GUST FACTOR 1.32

FLOOR	HEIGHT	FORCE (KIPS) X	FORCE (KIPS) Y	AREA (SQ FT) X	AREA (SQ FT) Y	PRESSURE (PSF) X	PRESSURE (PSF) Y	ECCEN (FT) X	ECCEN (FT) Y	SHEAR (KIPS) X	SHEAR (KIPS) Y	MOMENT (1000-FT-KIPS) X	MOMENT (1000-FT-KIPS) Y	MOMENT (1000-FT-KIPS) Z
28TH	330.00									214.5	-289.1	27.0	20.9	.8
		13.0	-18.7	2479	3002	5.3	-6.2	-2	-1					
29TH	342.50									201.5	-270.5	23.5	18.3	.7
		13.2	-18.9	2479	3002	5.3	-6.3	-2	-1					
30TH	355.00									188.2	-251.5	20.3	15.9	.7
		13.4	-19.1	2479	3002	5.4	-6.4	-2	-1					
31ST	367.50									174.8	-232.4	17.2	13.6	.6
		13.6	-19.3	2479	3002	5.5	-6.4	-2	-1					
32ND	380.00									161.2	-213.1	14.4	11.5	.6
		13.8	-19.6	2479	3002	5.6	-6.5	-2	-1					
33RD	392.50									147.4	-193.5	11.9	9.6	.5
		14.0	-19.8	2479	3002	5.6	-6.6	-2	-2					
34TH	405.00									133.4	-173.7	9.6	7.8	.4
		14.1	-19.9	2479	3002	5.7	-6.6	-2	-2					
35TH	417.50									119.3	-153.8	7.6	6.2	.4
		14.2	-19.8	2479	3002	5.7	-6.6	-2	-1					
36TH	430.00									105.2	-134.1	5.8	4.8	.3
		14.2	-19.7	2479	3002	5.7	-6.5	-2	-1					
37TH	442.50									90.9	-114.4	4.2	3.6	.3
		14.3	-19.5	2479	3002	5.8	-6.5	-2	-1					
38TH	455.00									76.6	-94.9	2.9	2.6	.2
		14.3	-19.4	2479	3002	5.8	-6.5	-2	-1					
39TH	467.50									62.3	-75.4	1.8	1.7	.1
		14.4	-19.3	2479	3002	5.8	-6.4	-2	-1					
40TH	480.00									47.9	-56.1	1.0	1.0	.1
		14.4	-19.2	2479	3002	5.8	-6.4	-2	-1					
41ST	492.50									33.5	-36.9	.4	.5	.0
		13.9	-17.7	2479	3002	5.6	-5.9	-2	-1					
42ND	505.00									19.6	-19.2	.1	.2	-.0
		12.5	-14.4	2479	3002	5.0	-4.8	-2	-2					
43RD	517.50									7.1	-4.8	-.1	-.0	-.1
		11.0	-11.2	2479	3002	4.5	-3.7	-3	-3					
PARA	530.00									-3.9	6.4	-.1	-.0	-.1
		-3.9	6.4	1856	1929	-2.1	3.3	-14	-8					
TOP	547.00									0.0	0.0	0.0	0.0	0.0

TABLE 7. SHEAR AND MOMENT DIAGRAMS : 1999 BROADWAY TOWER
WIND DIRECTION 180 CONFIGURATION A REFERENCE PRESSURE 22.0 PSF GUST FACTOR 1.32

FLOOR	HEIGHT	FORCE (KIPS) X	FORCE (KIPS) Y	AREA (SQ FT) X	AREA (SQ FT) Y	PRESSURE (PSF) X	PRESSURE (PSF) Y	ECCEN (FT) X	ECCEN (FT) Y	SHEAR (KIPS) X	SHEAR (KIPS) Y	MOMENT (1000-FT-KIPS) X	MOMENT (1000-FT-KIPS) Y	MOMENT (1000-FT-KIPS) Z
LBBY	0.00									139.5	-392.1	124.1	39.3	-5.9
		5.6	-10.1	4067	3717	1.4	-2.7	19	10					
3RD	30.00									133.9	-382.0	112.4	35.2	-5.6
		1.9	-4.6	1885	1928	1.0	-2.4	16	7					
4TH	42.50									132.0	-377.4	107 7	33.5	-5.6
		2.4	-5.5	2252	2592	1.1	-2.1	21	9					
5TH	55.00									129.5	-371.9	103.0	31.9	-5.4
		3.0	-6.0	2479	3002	1.2	-2.0	24	12					
6TH	67.50									126.5	-365.9	98.4	30.3	-5.2
		3.0	-6.1	2479	3002	1.2	-2.0	24	12					
7TH	80.00									123.5	-359.8	93.9	28.7	-5.1
		3.0	-6.3	2479	3002	1.2	-2.1	24	12					
8TH	92.50									120.5	-353.5	89.4	27.2	-4.9
		3.0	-6.4	2479	3002	1.2	-2.1	23	11					
9TH	105.00									117.5	-347.1	85.0	25.7	-4.7
		3.0	-6.6	2479	3002	1.2	-2.2	25	11					
10TH	117.50									114.5	-340.5	80.7	24.3	-4.5
		3.0	-6.7	2479	3002	1.2	-2.2	25	11					
11TH	130.00									111.5	-333.7	76.5	22.9	-4.3
		2.9	-6.9	2479	3002	1.2	-2.3	25	11					
12TH	142.50									108.6	-326.8	72.4	21.5	-4.1
		3.0	-7.0	2479	3002	1.2	-2.3	24	10					
14TH	155.00									105.6	-319.8	68.4	20.1	-3.9
		3.0	-7.1	2479	3002	1.2	-2.4	22	9					
15TH	167.50									102.6	-312.8	64.4	18.8	-3.7
		3.1	-7.2	2479	3002	1.2	-2.4	19	8					
16TH	180.00									99.5	-305.6	60.5	17.6	-3.5
		3.1	-7.2	2479	3002	1.2	-2.4	17	7					
17TH	192.50									96.5	-298.4	56.8	16.4	-3.4
		3.1	-7.3	2479	3002	1.3	-2.4	15	7					
18TH	205.00									93.3	-291.1	53.1	15.2	-3.2
		3.2	-7 4	2479	3002	1.3	-2.5	13	6					
19TH	217.50									90.1	-283.7	49.5	14.0	-3.1
		3.2	-7.5	2479	3002	1.3	-2.5	11	5					
20TH	230.00									86.9	-276.3	46.0	12.9	-3.0
		3.3	-7.7	2479	3002	1.3	-2.5	10	4					
21ST	242.50									83.7	-268.6	42.6	11.9	-2.9
		3.4	-8.0	2479	3002	1.4	-2.7	10	4					
22ND	255.00									80.3	-260.6	39.3	10.8	-2.8
		3.4	-8.3	2479	3002	1.4	-2.8	9	4					
23RD	267.50									76.9	-252.3	36.1	9.8	-2.8
		3.5	-8.6	2479	3002	1.4	-2.9	9	4					
24TH	280.00									73.4	-243.7	33.0	8.9	-2.7
		3.6	-9.0	2479	3002	1.4	-3.0	8	3					
25TH	292.50									69.8	-234.7	30.0	8.0	-2.6
		3.7	-9.3	2479	3002	1.5	-3.1	8	3					
26TH	305.00									66.1	-225.4	27.1	7.2	-2.5
		3.7	-9.6	2479	3002	1.5	-3.2	7	3					
27TH	317.50									62.4	-215.8	24.3	6.4	-2.4
		3.8	-10.0	2479	3002	1.5	-3.3	7	3					

TABLE 7. SHEAR AND MOMENT DIAGRAMS : 1999 BROADWAY TOWER
WIND DIRECTION 180 CONFIGURATION A REFERENCE PRESSURE 22.0 PSF GUST FACTOR 1.32

FLOOR	HEIGHT	FORCE (KIPS) X	FORCE (KIPS) Y	AREA (SQ FT) X	AREA (SQ FT) Y	PRESSURE (PSF) X	PRESSURE (PSF) Y	ECCEN (FT) X	ECCEN (FT) Y	SHEAR (KIPS) X	SHEAR (KIPS) Y	MOMENT (1000-FT-KIPS) X	MOMENT (1000-FT-KIPS) Y	MOMENT (1000-FT-KIPS) Z
28TH	330.00									58.6	-205.9	21.7	5.6	-2.3
		3.7	-10.3	2479	3002	1.5	-3.4	7	3					
29TH	342.50									54.8	-195.5	19.2	4.9	-2.2
		3.7	-10.7	2479	3002	1.5	-3.6	7	3					
30TH	355.00									51.2	-184.8	16.8	4.2	-2.2
		3.6	-11.1	2479	3002	1.5	-3.7	8	2					
31ST	367.50									47.5	-173.7	14.6	3.6	-2.1
		3.6	-11.5	2479	3002	1.4	-3.8	8	2					
32ND	380.00									44.0	-162.2	12.5	3.0	-2.0
		3.5	-11.9	2479	3002	1.4	-4.0	8	2					
33RD	392.50									40.5	-150.4	10.5	2.5	-1.9
		3.4	-12.3	2479	3002	1.4	-4.1	8	2					
34TH	405.00									37.0	-138.1	8.7	2.0	-1.8
		3.5	-12.6	2479	3002	1.4	-4.2	8	2					
35TH	417.50									33.5	-125.5	7.1	1.6	-1.6
		3.7	-13.1	2479	3002	1.5	-4.4	9	3					
36TH	430.00									29.8	-112.4	5.6	1.2	-1.5
		4.0	-13.5	2479	3002	1.6	-4.5	10	3					
37TH	442.50									25.9	-98.9	4.3	.8	-1.4
		4.2	-13.9	2479	3002	1.7	-4.6	11	3					
38TH	455.00									21.7	-85.0	3.1	.5	-1.2
		4.4	-14.3	2479	3002	1.8	-4.8	11	3					
39TH	467.50									17.2	-70.7	2.1	.3	-1.0
		4.6	-14.7	2479	3002	1.9	-4.9	12	4					
40TH	480.00									12.6	-55.9	1.4	.1	-.8
		4.9	-15.2	2479	3002	2.0	-5.1	13	4					
41ST	492.50									7.7	-40.7	.8	-.0	-.6
		4.8	-14.8	2479	3002	1.9	-4.9	14	4					
42ND	505.00									2.9	-26.0	.3	-.1	-.4
		4.3	-13.3	2479	3002	1.7	-4.4	16	5					
43RD	517.50									-1.3	-12.7	.1	-.1	-.2
		3.8	-11.8	2479	3002	1.5	-3.9	19	6					
PARA	530.00									-5.1	-.9	.0	-.0	.1
		-5.1	-.9	1856	1929	-2.7	-.4	-2	14					
TOP	547.00									0.0	0.0	0.0	0.0	0.0

TABLE 7. SHEAR AND MOMENT DIAGRAMS : 1999 BROADWAY TOWER
WIND DIRECTION 190 CONFIGURATION A REFERENCE PRESSURE 22.0 PSF GUST FACTOR 1.32

FLOOR	HEIGHT	FORCE (KIPS) X	FORCE (KIPS) Y	AREA (SQ FT) X	AREA (SQ FT) Y	PRESSURE (PSF) X	PRESSURE (PSF) Y	ECCEN (FT) X	ECCEN (FT) Y	SHEAR (KIPS) X	SHEAR (KIPS) Y	MOMENT (1000-FT-KIPS) X	MOMENT (1000-FT-KIPS) Y	MOMENT (1000-FT-KIPS) Z
LBBY	0.00									159.5	-572.3	175.4	46.1	-20.4
		4.8	-18.9	4067	3717	1.2	-5.1	22	6					
3RD	30.00									154.6	-553.4	158.5	41.4	-19.9
		1.4	-8.0	1885	1928	.7	-4.2	24	4					
4TH	42.50									153.2	-545.4	151.6	39.5	-19.7
		2.3	-9.3	2252	2592	1.0	-3.6	37	9					
5TH	55.00									151.0	-536.1	144.9	37.6	-19.4
		3.0	-10.1	2479	3002	1.2	-3.4	43	13					
6TH	67.50									147.9	-526.0	138.2	35.7	-18.9
		3.1	-10.4	2479	3002	1.3	-3.5	44	13					
7TH	80.00									144.8	-515.6	131.7	33.9	-18.4
		3.2	-10.7	2479	3002	1.3	-3.6	44	13					
8TH	92.50									141.6	-504.9	125.3	32.1	-17.9
		3.3	-10.9	2479	3002	1.3	-3.6	45	13					
9TH	105.00									138.4	-494.0	119.1	30.4	-17.3
		3.3	-11.2	2479	3002	1.3	-3.7	45	13					
10TH	117.50									135.0	-482.8	113.0	28.7	-16.8
		3.4	-11.4	2479	3002	1.4	-3.8	46	14					
11TH	130.00									131.6	-471.4	107.0	27.0	-16.2
		3.5	-11.7	2479	3002	1.4	-3.9	46	14					
12TH	142.50									128.1	-459.6	101.2	25.4	-15.6
		3.6	-11.7	2479	3002	1.4	-3.9	45	14					
14TH	155.00									124.6	-447.9	95.5	23.8	-15.1
		3.6	-11.6	2479	3002	1.5	-3.9	44	14					
15TH	167.50									120.9	-436.3	90.0	22.2	-14.5
		3.7	-11.5	2479	3002	1.5	-3.8	43	14					
16TH	180.00									117.3	-424.9	84.6	20.8	-13.9
		3.7	-11.4	2479	3002	1.5	-3.8	42	14					
17TH	192.50									113.6	-413.5	79.4	19.3	-13.4
		3.8	-11.3	2479	3002	1.5	-3.8	41	14					
18TH	205.00									109.8	-402.2	74.3	17.9	-12.9
		3.8	-11.2	2479	3002	1.5	-3.7	40	14					
19TH	217.50									106.0	-391.1	69.3	16.6	-12.4
		3.9	-11.0	2479	3002	1.6	-3.7	39	14					
20TH	230.00									102.1	-380.0	64.5	15.3	-11.9
		3.9	-11.1	2479	3002	1.6	-3.7	38	14					
21ST	242.50									98.2	-368.9	59.8	14.0	-11.4
		4.0	-11.4	2479	3002	1.6	-3.8	37	13					
22ND	255.00									94.2	-357.5	55.3	12.8	-10.9
		4.1	-11.6	2479	3002	1.6	-3.9	37	13					
23RD	267.50									90.1	-345.9	50.9	11.7	-10.5
		4.1	-11.9	2479	3002	1.7	-4.0	36	12					
24TH	280.00									86.0	-334.0	46.6	10.6	-10.0
		4.2	-12.2	2479	3002	1.7	-4.1	35	12					
25TH	292.50									81.8	-321.8	42.5	9.5	-9.5
		4.2	-12.4	2479	3002	1.7	-4.1	34	12					
26TH	305.00									77.6	-309.4	38.6	8.5	-9.0
		4.3	-12.7	2479	3002	1.7	-4.2	34	11					
27TH	317.50									73.3	-296.7	34.8	7.6	-8.6
		4.3	-13.0	2479	3002	1.7	-4.3	33	11					

TABLE 7. SHEAR AND MOMENT DIAGRAMS : 1999 BROADWAY TOWER
WIND DIRECTION 190 CONFIGURATION A REFERENCE PRESSURE 22.0 PSF GUST FACTOR 1.32

FLOOR	HEIGHT	FORCE (KIPS) X	FORCE (KIPS) Y	AREA (SQ FT) X	AREA (SQ FT) Y	PRESSURE (PSF) X	PRESSURE (PSF) Y	ECCEN (FT) X	ECCEN (FT) Y	SHEAR (KIPS) X	SHEAR (KIPS) Y	MOMENT (1000-FT-KIPS) X	MOMENT (1000-FT-KIPS) Y	MOMENT (1000-FT-KIPS) Z
28TH	330.00									69.0	-283.7	31.2	6.7	-8.1
		4.3	-13.5	2479	3002	1.7	-4.5	33	10					
29TH	342.50									64.7	-270.2	27.7	5.9	-7.6
		4.3	-13.9	2479	3002	1.7	-4.6	32	10					
30TH	355.00									60.4	-256.3	24.4	5.1	-7.1
		4.3	-14.4	2479	3002	1.7	-4.8	32	9					
31ST	367.50									56.2	-241.9	21.3	4.3	-6.6
		4.2	-14.8	2479	3002	1.7	-4.9	31	9					
32ND	380.00									51.9	-227.1	18.4	3.7	-6.1
		4.2	-15.3	2479	3002	1.7	-5.1	31	8					
33RD	392.50									47.7	-211.8	15.6	3.0	-5.6
		4.2	-15.8	2479	3002	1.7	-5.2	30	8					
34TH	405.00									43.5	-196.0	13.1	2.5	-5.1
		4.2	-16.3	2479	3002	1.7	-5.4	30	8					
35TH	417.50									39.3	-179.7	10.7	2.0	-4.6
		4.4	-17.1	2479	3002	1.8	-5.7	29	7					
36TH	430.00									34.9	-162.6	8.6	1.5	-4.1
		4.6	-17.9	2479	3002	1.9	-6.0	28	7					
37TH	442.50									30.3	-144.7	6.7	1.1	-3.5
		4.8	-18.6	2479	3002	1.9	-6.2	27	7					
38TH	455.00									25.5	-126.1	5.0	.7	-3.0
		4.9	-19.4	2479	3002	2.0	-6.5	26	7					
39TH	467.50									20.6	-106.7	3.5	.4	-2.5
		5.1	-20.2	2479	3002	2.1	-6.7	25	6					
40TH	480.00									15.4	-86.5	2.3	.2	-1.9
		5.3	-21.0	2479	3002	2.1	-7.0	24	6					
41ST	492.50									10.1	-65.5	1.4	.1	-1.4
		5.2	-20.8	2479	3002	2.1	-6.9	24	6					
42ND	505.00									4.9	-44.7	.7	-.0	-.9
		4.8	-19.6	2479	3002	1.9	-6.5	25	6					
43RD	517.50									.1	-25.1	.3	-.1	-.3
		4.4	-18.3	2479	3002	1.8	-6.1	26	6					
PARA	530.00									-4.3	-6.7	.1	-.0	.2
		-4.3	-6.7	1856	1929	-2.3	-3.5	-17	11					
TOP	547.00									0.0	0.0	0.0	0.0	0.0

TABLE 7. SHEAR AND MOMENT DIAGRAMS : 1999 BROADWAY TOWER
WIND DIRECTION 200 CONFIGURATION A REFERENCE PRESSURE 22.0 PSF GUST FACTOR 1.32

FLOOR	HEIGHT	FORCE (KIPS) X	FORCE (KIPS) Y	AREA (SQ FT) X	AREA (SQ FT) Y	PRESSURE (PSF) X	PRESSURE (PSF) Y	ECCEN (FT) X	ECCEN (FT) Y	SHEAR (KIPS) X	SHEAR (KIPS) Y	MOMENT (1000-FT-KIPS) X	MOMENT (1000-FT-KIPS) Y	MOMENT (1000-FT-KIPS) Z
LBBY	0.00									284.7	-925.7	276.5	84.3	-38.6
		10.0	-33.3	4067	3717	2.5	-9.0	21	6					
3RD	30.00									274.7	-892.4	249.2	75.9	-37.9
		3.0	-13.5	1885	1928	1.6	-7.0	23	5					
4TH	42.50									271.7	-878.9	238.1	72.5	-37.6
		4.1	-15.4	2252	2592	1.8	-5.9	33	9					
5TH	55.00									267.7	-863.5	227.2	69.2	-37.0
		5.1	-16.5	2479	3002	2.0	-5.5	39	12					
6TH	67.50									262.6	-847.0	216.5	65.8	-36.3
		5.1	-16.8	2479	3002	2.0	-5.6	40	12					
7TH	80.00									257.5	-830.2	206.1	62.6	-35.6
		5.1	-17.1	2479	3002	2.0	-5.7	41	12					
8TH	92.50									252.4	-813.1	195.8	59.4	-34.8
		5.1	-17.4	2479	3002	2.1	-5.8	42	12					
9TH	105.00									247.3	-795.8	185.7	56.3	-34.0
		5.1	-17.7	2479	3002	2.1	-5.9	43	12					
10TH	117.50									242.3	-778.1	175.9	53.2	-33.2
		5.1	-18.0	2479	3002	2.1	-6.0	44	12					
11TH	130.00									237.2	-760.1	166.3	50.2	-32.4
		5.1	-18.3	2479	3002	2.1	-6.1	45	12					
12TH	142.50									232.1	-741.9	156.9	47.3	-31.5
		5.3	-18.4	2479	3002	2.1	-6.1	44	13					
14TH	155.00									226.7	-723.4	147.7	44.4	-30.6
		5.6	-18.6	2479	3002	2.3	-6.2	44	13					
15TH	167.50									221.1	-704.8	138.8	41.6	-29.7
		5.9	-18.7	2479	3002	2.4	-6.2	43	14					
16TH	180.00									215.2	-686.1	130.1	38.9	-28.8
		6.2	-18.8	2479	3002	2.5	-6.3	42	14					
17TH	192.50									208.9	-667.3	121.7	36.2	-28.0
		6.5	-19.0	2479	3002	2.6	-6.3	41	14					
18TH	205.00									202.4	-648.3	113.4	33.7	-27.1
		6.9	-19.1	2479	3002	2.8	-6.4	41	15					
19TH	217.50									195.5	-629.3	105.4	31.2	-26.2
		7.2	-19.2	2479	3002	2.9	-6.4	40	15					
20TH	230.00									188.4	-610.0	97.7	28.8	-25.3
		7.3	-19.6	2479	3002	3.0	-6.5	40	15					
21ST	242.50									181.0	-590.5	90.2	26.5	-24.4
		7.3	-20.2	2479	3002	2.9	-6.7	40	14					
22ND	255.00									173.7	-570.3	82.9	24.3	-23.5
		7.3	-20.7	2479	3002	2.9	-6.9	40	14					
23RD	267.50									166.4	-549.6	75.9	22.1	-22.6
		7.3	-21.3	2479	3002	2.9	-7.1	40	14					
24TH	280.00									159.2	-528.2	69.2	20.1	-21.7
		7.3	-21.9	2479	3002	2.9	-7.3	40	13					
25TH	292.50									151.9	-506.3	62.7	18.2	-20.7
		7.3	-22.5	2479	3002	2.9	-7.5	40	13					
26TH	305.00									144.6	-483.8	56.6	16.3	-19.7
		7.3	-23.1	2479	3002	2.9	-7.7	40	12					
27TH	317.50									137.4	-460.8	50.6	14.5	-18.7
		7.3	-23.6	2479	3002	2.9	-7.9	40	12					

TABLE 7. SHEAR AND MOMENT DIAGRAMS : 1999 BROADWAY TOWER
WIND DIRECTION 200 CONFIGURATION A REFERENCE PRESSURE 22.0 PSF GUST FACTOR 1.32

FLOOR	HEIGHT	FORCE (KIPS) X	FORCE (KIPS) Y	AREA (SQ FT) X	AREA (SQ FT) Y	PRESSURE (PSF) X	PRESSURE (PSF) Y	ECCEN (FT) X	ECCEN (FT) Y	SHEAR (KIPS) X	SHEAR (KIPS) Y	MOMENT (1000-FT-KIPS) X	MOMENT (1000-FT-KIPS) Y	MOMENT (1000-FT-KIPS) Z
28TH	330.00									130.1	-437.1	45.0	12.9	-17.7
		7.4	-24.2	2479	3002	3.0	-8.0	39	12					
29TH	342.50									122.6	-413.0	39.7	11.3	-16.7
		7.6	-24.7	2479	3002	3.1	-8.2	39	12					
30TH	355.00									115.1	-388.3	34.7	9.8	-15.6
		7.7	-25.2	2479	3002	3.1	-8.4	39	12					
31ST	367.50									107.4	-363.1	30.0	8.4	-14.5
		7.9	-25.7	2479	3002	3.2	-8.6	39	12					
32ND	380.00									99.5	-337.5	25.6	7.1	-13.4
		8.0	-26.2	2479	3002	3.2	-8.7	39	12					
33RD	392.50									91.5	-311.3	21.6	5.9	-12.3
		8.1	-26.7	2479	3002	3.3	-8.9	39	12					
34TH	405.00									83.4	-284.6	17.9	4.8	-11.2
		8.3	-27.2	2479	3002	3.3	-9.1	38	12					
35TH	417.50									75.1	-257.4	14.5	3.8	-10.0
		8.5	-27.7	2479	3002	3.4	-9.2	38	12					
36TH	430.00									66.6	-229.6	11.4	3.0	-8.9
		8.7	-28.2	2479	3002	3.5	-9.4	38	12					
37TH	442.50									57.8	-201.4	8.7	2.2	-7.7
		8.9	-28.7	2479	3002	3.6	-9.6	37	12					
38TH	455.00									48.9	-172.7	6.4	1.5	-6.6
		9.2	-29.2	2479	3002	3.7	-9.7	37	12					
39TH	467.50									39.7	-143.5	4.4	1.0	-5.4
		9.4	-29.7	2479	3002	3.8	-9.9	36	11					
40TH	480.00									30.3	-113.8	2.8	.5	-4.2
		9.6	-30.2	2479	3002	3.9	-10.1	36	11					
41ST	492.50									20.7	-83.7	1.6	.2	-3.0
		9.5	-29.4	2479	3002	3.8	-9.8	36	11					
42ND	505.00									11.2	-54.2	.7	.0	-1.8
		9.0	-27.1	2479	3002	3.6	-9.0	35	12					
43RD	517.50									2.2	-27.1	.2	-.1	-.8
		8.5	-24.7	2479	3002	3.4	-8.2	34	12					
PARA	530.00									-6.2	-2.5	.0	-.1	.2
		-6.2	-2.5	1856	1929	-3.3	-1.3	-8	22					
TOP	547.00									0.0	0.0	0.0	0.0	0.0

TABLE 7. SHEAR AND MOMENT DIAGRAMS : 1999 BROADWAY TOWER
WIND DIRECTION 210 CONFIGURATION A REFERENCE PRESSURE 22.0 PSF GUST FACTOR 1.32

FLOOR	HEIGHT	FORCE (KIPS) X	FORCE (KIPS) Y	AREA (SQ FT) X	AREA (SQ FT) Y	PRESSURE (PSF) X	PRESSURE (PSF) Y	ECCEN (FT) X	ECCEN (FT) Y	SHEAR (KIPS) X	SHEAR (KIPS) Y	MOMENT (1000-FT-KIPS) X	MOMENT (1000-FT-KIPS) Y	MOMENT (1000-FT-KIPS) Z
LBBY	0.00									312.4	-1006.2	303.1	98.3	-38.7
		11.5	-33.5	4067	3717	2.8	-9.0	20	7					
3RD	30.00									300.9	-972.7	273.4	89.1	-38.0
		3.3	-14.5	1885	1928	1.8	-7.5	21	5					
4TH	42.50									297.6	-958.2	261.3	85.3	-37.6
		4.3	-17.0	2252	2592	1.9	-6.6	31	8					
5TH	55.00									293.2	-941.2	249.4	81.6	-37.1
		5.2	-18.4	2479	3002	2.1	-6.1	37	10					
6TH	67.50									288.0	-922.8	237.8	78.0	-36.4
		5.1	-18.8	2479	3002	2.1	-6.3	38	10					
7TH	80.00									282.9	-904.1	226.4	74.4	-35.6
		5.0	-19.1	2479	3002	2.0	-6.4	39	10					
8TH	92.50									278.0	-884.9	215.2	70.9	-34.8
		4.9	-19.5	2479	3002	2.0	-6.5	40	10					
9TH	105.00									273.1	-865.4	204.2	67.5	-34.0
		4.8	-19.9	2479	3002	1.9	-6.6	40	10					
10TH	117.50									268.3	-845.5	193.5	64.1	-33.1
		4.6	-20.3	2479	3002	1.9	-6.8	41	9					
11TH	130.00									263.7	-825.2	183.1	60.8	-32.3
		4.5	-20.6	2479	3002	1.8	-6.9	42	9					
12TH	142.50									259.2	-804.6	172.9	57.5	-31.4
		4.7	-20.7	2479	3002	1.9	-6.9	42	9					
14TH	155.00									254.5	-783.9	163.0	54.3	-30.4
		4.9	-20.6	2479	3002	2.0	-6.9	41	10					
15TH	167.50									249.6	-763.2	153.3	51.2	-29.5
		5.1	-20.6	2479	3002	2.1	-6.9	40	10					
16TH	180.00									244.5	-742.7	143.9	48.1	-28.7
		5.3	-20.5	2479	3002	2.2	-6.8	39	10					
17TH	192.50									239.2	-722.2	134.8	45.0	-27.8
		5.6	-20.4	2479	3002	2.2	-6.8	39	11					
18TH	205.00									233.6	-701.8	125.9	42.1	-27.0
		5.8	-20.4	2479	3002	2.3	-6.8	38	11					
19TH	217.50									227.8	-681.4	117.2	39.2	-26.1
		6.0	-20.3	2479	3002	2.4	-6.8	37	11					
20TH	230.00									221.8	-661.1	108.8	36.4	-25.3
		6.3	-20.4	2479	3002	2.5	-6.8	36	11					
21ST	242.50									215.5	-640.7	100.7	33.7	-24.5
		6.5	-20.8	2479	3002	2.6	-6.9	36	11					
22ND	255.00									209.0	-619.8	92.8	31.0	-23.7
		6.8	-21.2	2479	3002	2.7	-7.1	36	11					
23RD	267.50									202.2	-598.6	85.2	28.4	-22.9
		7.1	-21.6	2479	3002	2.9	-7.2	35	12					
24TH	280.00									195.1	-577.0	77.8	26.0	-22.0
		7.3	-22.0	2479	3002	3.0	-7.3	35	12					
25TH	292.50									187.8	-555.0	70.8	23.6	-21.2
		7.6	-22.4	2479	3002	3.1	-7.5	35	12					
26TH	305.00									180.1	-532.6	64.0	21.3	-20.3
		7.9	-22.8	2479	3002	3.2	-7.6	34	12					
27TH	317.50									172.3	-509.8	57.5	19.1	-19.4
		8.2	-23.3	2479	3002	3.3	-7.8	34	12					

TABLE 7. SHEAR AND MOMENT DIAGRAMS : 1999 BROADWAY TOWER
WIND DIRECTION 210 CONFIGURATION A REFERENCE PRESSURE 22.0 PSF GUST FACTOR 1.32

FLOOR	HEIGHT	FORCE (KIPS) X	FORCE (KIPS) Y	AREA (SQ FT) X	AREA (SQ FT) Y	PRESSURE (PSF) X	PRESSURE (PSF) Y	ECCEN (FT) X	ECCEN (FT) Y	SHEAR (KIPS) X	SHEAR (KIPS) Y	MOMENT (1000-FT-KIPS) X	MOMENT (1000-FT-KIPS) Y	MOMENT (1000-FT-KIPS) Z
28TH	330.00									164.1	-486.5	51.2	17.0	-18.5
		8.4	-24.3	2479	3002	3.4	-8.1	34	12					
29TH	342.50									155.7	-462.2	45.3	15.0	-17.6
		8.7	-25.3	2479	3002	3.5	-8.4	34	12					
30TH	355.00									147.0	-436.9	39.7	13.1	-16.6
		9.0	-26.3	2479	3002	3.6	-8.7	35	12					
31ST	367.50									138.0	-410.6	34.4	11.3	-15.6
		9.2	-27.2	2479	3002	3.7	-9.1	35	12					
32ND	380.00									128.8	-383.4	29.4	9.6	-14.6
		9.5	-28.2	2479	3002	3.8	-9.4	35	12					
33RD	392.50									119.3	-355.2	24.8	8.1	-13.5
		9.8	-29.2	2479	3002	3.9	-9.7	35	12					
34TH	405.00									109.5	-326.1	20.5	6.6	-12.3
		10.1	-30.1	2479	3002	4.1	-10.0	35	12					
35TH	417.50									99.4	-295.9	16.7	5.3	-11.2
		10.5	-31.0	2479	3002	4.2	-10.3	35	12					
36TH	430.00									88.9	-264.9	13.1	4.2	-10.0
		11.0	-31.9	2479	3002	4.4	-10.6	34	12					
37TH	442.50									77.9	-233.0	10.0	3.1	-8.7
		11.4	-32.9	2479	3002	4.6	-10.9	34	12					
38TH	455.00									66.5	-200.1	7.3	2.2	-7.5
		11.8	-33.8	2479	3002	4.8	-11.3	34	12					
39TH	467.50									54.7	-166.3	5.0	1.5	-6.2
		12.3	-34.7	2479	3002	4.9	-11.6	34	12					
40TH	480.00									42.4	-131.6	3.2	.8	-4.8
		12.7	-35.6	2479	3002	5.1	-11.9	34	12					
41ST	492.50									29.7	-96.0	1.8	.4	-3.5
		12.5	-34.8	2479	3002	5.1	-11.6	34	12					
42ND	505.00									17.2	-61.3	.8	.1	-2.2
		11.6	-31.6	2479	3002	4.7	-10.5	34	12					
43RD	517.50									5.5	-29.7	.2	-.0	-.9
		10.7	-28.4	2479	3002	4.3	-9.5	34	13					
PARA	530.00									-5.2	-1.2	.0	-.0	.1
		-5.2	-1.2	1856	1929	-2.8	-.6	-6	26					
TOP	547.00									0.0	0.0	0.0	0.0	0.0

TABLE 7. SHEAR AND MOMENT DIAGRAMS : 1999 BROADWAY TOWER
WIND DIRECTION 220 CONFIGURATION A REFERENCE PRESSURE 22.0 PSF GUST FACTOR 1.32

FLOOR	HEIGHT	FORCE (KIPS) X	FORCE (KIPS) Y	AREA (SQ FT) X	AREA (SQ FT) Y	PRESSURE (PSF) X	PRESSURE (PSF) Y	ECCEN (FT) X	ECCEN (FT) Y	SHEAR (KIPS) X	SHEAR (KIPS) Y	MOMENT (1000-FT-KIPS) X	MOMENT (1000-FT-KIPS) Y	MOMENT (1000-FT-KIPS) Z
LBBY	0.00									296.6	-946.5	300.7	100.8	-37.7
		6.5	-23.9	4067	3717	1.6	-6.4	21	6					
3RD	30.00									290.2	-922.6	272.6	92.0	-37.1
		1.4	-10.0	1885	1928	.7	-5.2	22	3					
4TH	42.50									288.7	-912.6	261.2	88.4	-36.9
		2.6	-11.7	2252	2592	1.2	-4.5	35	8					
5TH	55.00									286.1	-900.9	249.8	84.8	-36.5
		3.9	-13.1	2479	3002	1.6	-4.4	44	13					
6TH	67.50									282.2	-887.8	238.7	81.3	-35.9
		4.0	-13.8	2479	3002	1.6	-4.6	45	13					
7TH	80.00									278.2	-874.1	227.6	77.8	-35.2
		4.1	-14.4	2479	3002	1.6	-4.8	45	13					
8TH	92.50									274.2	-859.6	216.8	74.3	-34.5
		4.2	-15.1	2479	3002	1.7	-5.0	46	13					
9TH	105.00									270.0	-844.5	206.2	70.9	-33.7
		4.3	-15.8	2479	3002	1.7	-5.3	46	13					
10TH	117.50									265.8	-828.7	195.7	67.6	-33.0
		4.3	-16.5	2479	3002	1.8	-5.5	47	12					
11TH	130.00									261.4	-812.3	185.4	64.3	-32.1
		4.4	-17.1	2479	3002	1.8	-5.7	47	12					
12TH	142.50									257.0	-795.1	175.4	61.0	-31.3
		4.5	-17.5	2479	3002	1.8	-5.8	46	12					
14TH	155.00									252.5	-777.6	165.6	57.8	-30.4
		4.5	-17.8	2479	3002	1.8	-5.9	45	11					
15TH	167.50									248.0	-759.7	156.0	54.7	-29.6
		4.6	-18.1	2479	3002	1.8	-6.0	43	11					
16TH	180.00									243.4	-741.6	146.6	51.6	-28.7
		4.6	-18.4	2479	3002	1.9	-6.1	41	10					
17TH	192.50									238.8	-723.2	137.4	48.6	-27.9
		4.6	-18.7	2479	3002	1.9	-6.2	39	10					
18TH	205.00									234.2	-704.4	128.5	45.7	-27.1
		4.7	-19.0	2479	3002	1.9	-6.3	38	9					
19TH	217.50									229.5	-685.4	119.8	42.8	-26.4
		4.7	-19.3	2479	3002	1.9	-6.4	36	9					
20TH	230.00									224.8	-666.1	111.4	39.9	-25.6
		4.8	-19.7	2479	3002	2.0	-6.6	36	9					
21ST	242.50									220.0	-646.4	103.2	37.2	-24.9
		5.1	-20.2	2479	3002	2.0	-6.7	36	9					
22ND	255.00									214.9	-626.2	95.2	34.4	-24.1
		5.3	-20.6	2479	3002	2.1	-6.9	36	9					
23RD	267.50									209.6	-605.6	87.5	31.8	-23.3
		5.6	-21.1	2479	3002	2.2	-7.0	36	9					
24TH	280.00									204.1	-584.5	80.1	29.2	-22.5
		5.8	-21.6	2479	3002	2.3	-7.2	36	10					
25TH	292.50									198.2	-562.9	72.9	26.7	-21.7
		6.0	-22.1	2479	3002	2.4	-7.3	36	10					
26TH	305.00									192.2	-540.8	66.0	24.2	-20.9
		6.3	-22.5	2479	3002	2.5	-7.5	36	10					
27TH	317.50									185.9	-518.3	59.4	21.9	-20.0
		6.6	-23.1	2479	3002	2.7	-7.7	36	10					

TABLE 7. SHEAR AND MOMENT DIAGRAMS : 1999 BROADWAY TOWER
WIND DIRECTION 220 CONFIGURATION A REFERENCE PRESSURE 22.0 PSF GUST FACTOR 1.32

FLOOR	HEIGHT	FORCE (KIPS) X	FORCE (KIPS) Y	AREA (SQ FT) X	AREA (SQ FT) Y	PRESSURE (PSF) X	PRESSURE (PSF) Y	ECCEN (FT) X	ECCEN (FT) Y	SHEAR (KIPS) X	SHEAR (KIPS) Y	MOMENT (1000-FT-KIPS) X	MOMENT (1000-FT-KIPS) Y	MOMENT (1000-FT-KIPS) Z
28TH	330.00									179.3	-495.1	53.1	19.6	-19.1
		7.2	-24.0	2479	3002	2.9	-8.0	35	11					
29TH	342.50									172.1	-471.1	47.0	17.4	-18.2
		7.8	-24.9	2479	3002	3.2	-8.3	35	11					
30TH	355.00									164.2	-446.2	41.3	15.3	-17.2
		8.4	-25.8	2479	3002	3.4	-8.6	35	11					
31ST	367.50									155.8	-420.4	35.9	13.3	-16.2
		9.0	-26.7	2479	3002	3.6	-8.9	35	12					
32ND	380.00									146.7	-393.7	30.8	11.4	-15.2
		9.6	-27.6	2479	3002	3.9	-9.2	35	12					
33RD	392.50									137.1	-366.1	26.0	9.6	-14.1
		10.2	-28.5	2479	3002	4.1	-9.5	35	12					
34TH	405.00									126.9	-337.6	21.6	8.0	-13.0
		10.8	-29.5	2479	3002	4.4	-9.8	35	13					
35TH	417.50									116.0	-308.1	17.6	6.5	-11.8
		11.5	-30.8	2479	3002	4.6	-10.3	34	13					
36TH	430.00									104.6	-277.3	13.9	5.1	-10.6
		12.1	-32.1	2479	3002	4.9	-10.7	34	13					
37TH	442.50									92.5	-245.1	10.7	3.9	-9.4
		12.7	-33.5	2479	3002	5.1	-11.1	34	13					
38TH	455.00									79.7	-211.7	7.8	2.8	-8.1
		13.4	-34.8	2479	3002	5.4	-11.6	34	13					
39TH	467.50									66.4	-176.9	5.4	1.9	-6.7
		14.0	-36.1	2479	3002	5.6	-12.0	33	13					
40TH	480.00									52.4	-140.9	3.4	1.1	-5.3
		14.6	-37.4	2479	3002	5.9	-12.5	33	13					
41ST	492.50									37.8	-103.5	1.9	.6	-3.9
		14.8	-37.1	2479	3002	6.0	-12.3	33	13					
42ND	505.00									23.0	-66.4	.8	.2	-2.5
		14.4	-34.6	2479	3002	5.8	-11.5	34	14					
43RD	517.50									8.7	-31.8	.2	-.0	-1.1
		13.9	-32.1	2479	3002	5.6	-10.7	34	15					
PARA	530.00									-5.2	.3	-.0	-.0	.2
		-5.2	.3	1856	1929	-2.8	.2	2	33					
TOP	547.00									0.0	0.0	0.0	0.0	0.0

TABLE 7. SHEAR AND MOMENT DIAGRAMS : 1999 BROADWAY TOWER
WIND DIRECTION 230 CONFIGURATION A REFERENCE PRESSURE 22.0 PSF GUST FACTOR 1.32

FLOOR	HEIGHT	FORCE (KIPS) X	FORCE (KIPS) Y	AREA (SQ FT) X	AREA (SQ FT) Y	PRESSURE (PSF) X	PRESSURE (PSF) Y	ECCEN (FT) X	ECCEN (FT) Y	SHEAR (KIPS) X	SHEAR (KIPS) Y	MOMENT (1000-FT-KIPS) X	MOMENT (1000-FT-KIPS) Y	MOMENT (1000-FT-KIPS) Z
LBBY	0.00									205.2	-556.7	175.8	67.5	-22.6
		2.3	-13.4	4067	3717	.6	-3.6	22	4					
3RD	30.00									202.9	-543.3	159.2	61.3	-22.3
		.8	-5.6	1885	1928	.4	-2.9	28	4					
4TH	42.50									202.2	-537.7	152.5	58.8	-22.1
		2.2	-7.6	2252	2592	1.0	-2.9	47	13					
5TH	55.00									200.0	-530.1	145.8	56.3	-21.7
		3.2	-9.3	2479	3002	1.3	-3.1	58	20					
6TH	67.50									196.8	-520.8	139.3	53.8	-21.1
		3.3	-9.5	2479	3002	1.3	-3.2	59	20					
7TH	80.00									193.5	-511.3	132.8	51.4	-20.5
		3.3	-9.8	2479	3002	1.4	-3.3	60	20					
8TH	92.50									190.2	-501.5	126.5	49.0	-19.8
		3.4	-10.1	2479	3002	1.4	-3.4	61	20					
9TH	105.00									186.8	-491.4	120.3	46.6	-19.2
		3.5	-10.4	2479	3002	1.4	-3.5	61	21					
10TH	117.50									183.3	-481.0	114.2	44.3	-18.4
		3.5	-10.7	2479	3002	1.4	-3.6	62	21					
11TH	130.00									179.7	-470.3	108.2	42.0	-17.7
		3.6	-10.9	2479	3002	1.5	-3.6	63	21					
12TH	142.50									176.1	-459.4	102.4	39.8	-16.9
		3.7	-11.0	2479	3002	1.5	-3.7	60	20					
14TH	155.00									172.4	-448.4	96.8	37.6	-16.2
		3.8	-10.9	2479	3002	1.5	-3.6	57	20					
15TH	167.50									168.6	-437.5	91.2	35.5	-15.5
		3.9	-10.9	2479	3002	1.6	-3.6	53	19					
16TH	180.00									164.8	-426.6	85.8	33.4	-14.9
		4.0	-10.8	2479	3002	1.6	-3.6	49	18					
17TH	192.50									160.8	-415.7	80.6	31.4	-14.3
		4.1	-10.8	2479	3002	1.6	-3.6	45	17					
18TH	205.00									156.7	-405.0	75.4	29.4	-13.7
		4.2	-10.7	2479	3002	1.7	-3.6	41	16					
19TH	217.50									152.5	-394.2	70.4	27.5	-13.2
		4.3	-10.7	2479	3002	1.7	-3.6	38	15					
20TH	230.00									148.3	-383.5	65.6	25.6	-12.7
		4.3	-10.8	2479	3002	1.7	-3.6	36	14					
21ST	242.50									143.9	-372.7	60.8	23.8	-12.3
		4.4	-11.1	2479	3002	1.8	-3.7	35	14					
22ND	255.00									139.6	-361.6	56.3	22.0	-11.8
		4.4	-11.4	2479	3002	1.8	-3.8	35	13					
23RD	267.50									135.2	-350.2	51.8	20.3	-11.4
		4.5	-11.7	2479	3002	1.8	-3.9	34	13					
24TH	280.00									130.7	-338.5	47.5	18.6	-10.9
		4.5	-12.0	2479	3002	1.8	-4.0	34	13					
25TH	292.50									126.2	-326.5	43.3	17.0	-10.5
		4.6	-12.3	2479	3002	1.8	-4.1	33	12					
26TH	305.00									121.6	-314.1	39.3	15.4	-10.0
		4.6	-12.6	2479	3002	1.9	-4.2	33	12					
27TH	317.50									117.0	-301.5	35.5	14.0	-9.5
		4.7	-13.0	2479	3002	1.9	-4.3	32	12					

TABLE 7. SHEAR AND MOMENT DIAGRAMS : 1999 BROADWAY TOWER
WIND DIRECTION 230 CONFIGURATION A REFERENCE PRESSURE 22.0 PSF GUST FACTOR 1.32

FLOOR	HEIGHT	FORCE (KIPS) X	FORCE (KIPS) Y	AREA (SQ FT) X	AREA (SQ FT) Y	PRESSURE (PSF) X	PRESSURE (PSF) Y	ECCEN (FT) X	ECCEN (FT) Y	SHEAR (KIPS) X	SHEAR (KIPS) Y	MOMENT (1000-FT-KIPS) X	MOMENT (1000-FT-KIPS) Y	MOMENT (1000-FT-KIPS) Z
28TH	330.00									112.3	-288.6	31.8	12.5	-9.0
		4.9	-13.4	2479	3002	2.0	-4.5	32	12					
29TH	342.50									107.4	-275.2	28.3	11.2	-8.6
		5.0	-13.8	2479	3002	2.0	-4.6	32	12					
30TH	355.00									102.4	-261.4	24.9	9.8	-8.1
		5.2	-14.2	2479	3002	2.1	-4.7	31	11					
31ST	367.50									97.2	-247.2	21.8	8.6	-7.6
		5.3	-14.6	2479	3002	2.2	-4.9	31	11					
32ND	380.00									91.9	-232.6	18.8	7.4	-7.1
		5.5	-15.0	2479	3002	2.2	-5.0	30	11					
33RD	392.50									86.4	-217.6	15.9	6.3	-6.5
		5.7	-15.4	2479	3002	2.3	-5.1	30	11					
34TH	405.00									80.7	-202.2	13.3	5.3	-6.0
		6.0	-16.1	2479	3002	2.4	-5.4	30	11					
35TH	417.50									74.7	-186.1	10.9	4.3	-5.5
		6.6	-17.3	2479	3002	2.7	-5.8	29	11					
36TH	430.00									68.1	-168.8	8.7	3.4	-4.9
		7.2	-18.4	2479	3002	2.9	-6.1	28	11					
37TH	442.50									60.8	-150.4	6.7	2.6	-4.3
		7.9	-19.6	2479	3002	3.2	-6.5	28	11					
38TH	455.00									53.0	-130.8	4.9	1.9	-3.7
		8.5	-20.7	2479	3002	3.4	-6.9	27	11					
39TH	467.50									44.5	-110.1	3.4	1.3	-3.0
		9.1	-21.9	2479	3002	3.7	-7.3	27	11					
40TH	480.00									35.4	-88.2	2.2	.8	-2.3
		9.7	-23.0	2479	3002	3.9	-7.7	26	11					
41ST	492.50									25.7	-65.2	1.2	.4	-1.6
		10.0	-23.0	2479	3002	4.0	-7.7	25	11					
42ND	505.00									15.8	-42.2	.5	.1	-.9
		9.8	-21.4	2479	3002	4.0	-7.1	24	11					
43RD	517.50									6.0	-20.9	.1	-.0	-.3
		9.6	-19.8	2479	3002	3.9	-6.6	22	11					
PARA	530.00									-3.7	-1.1	.0	-.0	.2
		-3.7	-1.1	1856	1929	-2.0	-.5	-17	58					
TOP	547.00									0.0	0.0	0.0	0.0	0.0

TABLE 7. SHEAR AND MOMENT DIAGRAMS : 1999 BROADWAY TOWER
WIND DIRECTION 240 CONFIGURATION A REFERENCE PRESSURE 22.0 PSF GUST FACTOR 1.32

FLOOR	HEIGHT	FORCE (KIPS) X	FORCE (KIPS) Y	AREA (SQ FT) X	AREA (SQ FT) Y	PRESSURE (PSF) X	PRESSURE (PSF) Y	ECCEN (FT) X	ECCEN (FT) Y	SHEAR (KIPS) X	SHEAR (KIPS) Y	MOMENT (1000-FT-KIPS) X	MOMENT (1000-FT-KIPS) Y	MOMENT (1000-FT-KIPS) Z
LBBY	0.00									196.2	-357.7	102.2	61.1	-21.1
3RD	30.00	.4	-11.0	4067	3717	.1	-2.9	22	1	195.7	-346.8	91.6	55.3	-20.9
4TH	42.50	.4	-4.5	1885	1928	.2	-2.3	35	3	195.4	-342.3	87.3	52.8	-20.7
5TH	55.00	1.7	-6.6	2252	2592	.8	-2.6	58	15	193.6	-335.7	83.1	50.4	-20.3
6TH	67.50	2.8	-8.4	2479	3002	1.1	-2.8	69	23	190.8	-327.2	78.9	48.0	-19.7
7TH	80.00	3.0	-8.5	2479	3002	1.2	-2.8	69	24	187.9	-318.7	74.9	45.6	-19.0
8TH	92.50	3.2	-8.6	2479	3002	1.3	-2.9	70	26	184.7	-310.1	71.0	43.3	-18.3
9TH	105.00	3.4	-8.7	2479	3002	1.4	-2.9	70	27	181.3	-301.3	67.2	41.0	-17.6
10TH	117.50	3.5	-8.9	2479	3002	1.4	-2.9	71	28	177.8	-292.5	63.5	38.7	-16.9
11TH	130.00	3.7	-9.0	2479	3002	1.5	-3.0	71	30	174.0	-283.5	59.9	36.5	-16.1
12TH	142.50	3.9	-9.1	2479	3002	1.6	-3.0	71	31	170.1	-274.5	56.4	34.4	-15.4
14TH	155.00	4.1	-8.9	2479	3002	1.7	-3.0	69	32	166.0	-265.5	53.0	32.3	-14.6
15TH	167.50	4.3	-8.7	2479	3002	1.7	-2.9	65	32	161.7	-256.9	49.7	30.2	-13.9
16TH	180.00	4.5	-8.4	2479	3002	1.8	-2.8	62	33	157.2	-248.5	46.6	28.3	-13.3
17TH	192.50	4.6	-8.1	2479	3002	1.9	-2.7	58	33	152.6	-240.3	43.5	26.3	-12.6
18TH	205.00	4.8	-7.9	2479	3002	1.9	-2.6	54	33	147.8	-232.4	40.6	24.4	-12.1
19TH	217.50	5.0	-7.6	2479	3002	2.0	-2.5	50	33	142.8	-224.8	37.7	22.6	-11.5
20TH	230.00	5.2	-7.4	2479	3002	2.1	-2.5	46	32	137.6	-217.4	34.9	20.9	-11.0
21ST	242.50	5.3	-7.3	2479	3002	2.1	-2.4	43	31	132.3	-210.1	32.3	19.2	-10.5
22ND	255.00	5.4	-7.5	2479	3002	2.2	-2.5	43	31	126.9	-202.6	29.7	17.6	-10.0
23RD	267.50	5.4	-7.6	2479	3002	2.2	-2.5	43	31	121.5	-195.0	27.2	16.0	-9.5
24TH	280.00	5.5	-7.7	2479	3002	2.2	-2.6	42	30	116.0	-187.3	24.8	14.5	-9.1
25TH	292.50	5.5	-7.9	2479	3002	2.2	-2.6	42	30	110.5	-179.5	22.5	13.1	-8.6
26TH	305.00	5.6	-8.0	2479	3002	2.3	-2.7	42	29	104.9	-171.5	20.3	11.8	-8.1
27TH	317.50	5.6	-8.1	2479	3002	2.3	-2.7	41	29	99.2	-163.4	18.2	10.5	-7.6
		5.7	-8.2	2479	3002	2.3	-2.7	41	28					

TABLE 7. SHEAR AND MOMENT DIAGRAMS : 1999 BROADWAY TOWER
WIND DIRECTION 240 CONFIGURATION A REFERENCE PRESSURE 22.0 PSF GUST FACTOR 1.32

FLOOR	HEIGHT	FORCE (KIPS) X	FORCE (KIPS) Y	AREA (SQ FT) X	AREA (SQ FT) Y	PRESSURE (PSF) X	PRESSURE (PSF) Y	ECCEN (FT) X	ECCEN (FT) Y	SHEAR (KIPS) X	SHEAR (KIPS) Y	MOMENT (1000-FT-KIPS) X	MOMENT (1000-FT-KIPS) Y	MOMENT (1000-FT-KIPS) Z
28TH	330.00									93.5	-155.1	16.2	9.3	-7.1
		5.7	-8.4	2479	3002	2.3	-2.8	40	27					
29TH	342.50									87.9	-146.7	14.4	8.2	-6.6
		5.7	-8.5	2479	3002	2.3	-2.8	40	27					
30TH	355.00									82.2	-138.3	12.6	7.1	-6.1
		5.7	-8.6	2479	3002	2.3	-2.9	39	26					
31ST	367.50									76.5	-129.7	10.9	6.1	-5.6
		5.6	-8.7	2479	3002	2.3	-2.9	39	25					
32ND	380.00									70.9	-121.0	9.3	5.2	-5.1
		5.6	-8.8	2479	3002	2.3	-2.9	38	24					
33RD	392.50									65.3	-112.2	7.9	4.3	-4.6
		5.6	-8.9	2479	3002	2.3	-3.0	38	24					
34TH	405.00									59.6	-103.3	6.5	3.5	-4.2
		5.7	-9.1	2479	3002	2.3	-3.0	37	23					
35TH	417.50									54.0	-94.1	5.3	2.8	-3.7
		5.9	-9.6	2479	3002	2.4	-3.2	35	22					
36TH	430.00									48.1	-84.6	4.2	2.2	-3.3
		6.1	-10.0	2479	3002	2.5	-3.3	34	20					
37TH	442.50									42.0	-74.6	3.2	1.6	-2.8
		6.3	-10.4	2479	3002	2.5	-3.5	32	19					
38TH	455.00									35.7	-64.2	2.3	1.2	-2.3
		6.5	-10.8	2479	3002	2.6	-3.6	31	19					
39TH	467.50									29.3	-53.4	1.6	.7	-1.9
		6.7	-11.2	2479	3002	2.7	-3.7	30	18					
40TH	480.00									22.6	-42.2	1.0	.4	-1.4
		6.9	-11.6	2479	3002	2.8	-3.9	29	17					
41ST	492.50									15.7	-30.5	.5	.2	-1.0
		6.8	-11.5	2479	3002	2.8	-3.8	27	16					
42ND	505.00									8.9	-19.1	.2	.0	-.5
		6.5	-10.5	2479	3002	2.6	-3.5	26	16					
43RD	517.50									2.3	-8.6	.0	-.0	-.2
		6.3	-9.5	2479	3002	2.5	-3.2	23	15					
PARA	530.00									-3.9	.9	-.0	-.0	.1
		-3.9	.9	1856	1929	-2.1	.5	8	35					
TOP	547.00									0.0	0.0	0.0	0.0	0.0

TABLE 7. SHEAR AND MOMENT DIAGRAMS : 1999 BROADWAY TOWER
WIND DIRECTION 250 CONFIGURATION A REFERENCE PRESSURE 22.0 PSF GUST FACTOR 1.32

FLOOR	HEIGHT	FORCE (KIPS) X	FORCE (KIPS) Y	AREA (SQ FT) X	AREA (SQ FT) Y	PRESSURE (PSF) X	PRESSURE (PSF) Y	ECCEN (FT) X	ECCEN (FT) Y	SHEAR (KIPS) X	SHEAR (KIPS) Y	MOMENT (1000-FT-KIPS) X	MOMENT (1000-FT-KIPS) Y	MOMENT (1000-FT-KIPS) Z
LBBY	0.00									229.3	-399.6	114.7	72.0	-27.7
		-.6	-13.1	4067	3717	-.1	-3.5	14	-1					
3RD	30.00									229.9	-386.5	102.9	65.1	-27.5
		.2	-5.4	1885	1928	.1	-2.8	30	1					
4TH	42.50									229.7	-381.1	98.1	62.3	-27.3
		1.9	-7.7	2252	2592	.9	-3.0	55	14					
5TH	55.00									227.7	-373.4	93.3	59.4	-26.9
		3.2	-9.7	2479	3002	1.3	-3.2	66	22					
6TH	67.50									224.5	-363.7	88.7	56.6	-26.2
		3.5	-9.7	2479	3002	1.4	-3.2	67	24					
7TH	80.00									221.1	-354.0	84.3	53.8	-25.4
		3.7	-9.7	2479	3002	1.5	-3.2	68	26					
8TH	92.50									217.3	-344.2	79.9	51.1	-24.7
		4.0	-9.8	2479	3002	1.6	-3.3	69	28					
9TH	105.00									213.3	-334.4	75.6	48.4	-23.9
		4.3	-9.8	2479	3002	1.7	-3.3	69	30					
10TH	117.50									209.1	-324.6	71.5	45.7	-23.1
		4.5	-9.8	2479	3002	1.8	-3.3	70	32					
11TH	130.00									204.5	-314.8	67.5	43.1	-22.3
		4.8	-9.8	2479	3002	1.9	-3.3	70	34					
12TH	142.50									199.7	-305.0	63.7	40.6	-21.4
		5.0	-9.6	2479	3002	2.0	-3.2	68	35					
14TH	155.00									194.7	-295.4	59.9	38.2	-20.6
		5.1	-9.3	2479	3002	2.1	-3.1	65	36					
15TH	167.50									189.6	-286.1	56.3	35.7	-19.8
		5.3	-9.0	2479	3002	2.1	-3.0	62	37					
16TH	180.00									184.3	-277.1	52.8	33.4	-19.0
		5.5	-8.7	2479	3002	2.2	-2.9	59	37					
17TH	192.50									178.8	-268.4	49.3	31.1	-18.3
		5.6	-8.4	2479	3002	2.3	-2.8	55	37					
18TH	205.00									173.2	-260.0	46.0	28.9	-17.7
		5.8	-8.1	2479	3002	2.3	-2.7	52	37					
19TH	217.50									167.4	-252.0	42.8	26.8	-17.0
		5.9	-7.7	2479	3002	2.4	-2.6	48	37					
20TH	230.00									161.5	-244.2	39.7	24.8	-16.4
		6.0	-7.7	2479	3002	2.4	-2.6	46	36					
21ST	242.50									155.5	-236.6	36.7	22.8	-15.9
		6.0	-7.9	2479	3002	2.4	-2.6	46	36					
22ND	255.00									149.5	-228.7	33.8	20.9	-15.3
		6.1	-8.0	2479	3002	2.4	-2.7	46	35					
23RD	267.50									143.4	-220.7	31.0	19.0	-14.7
		6.1	-8.2	2479	3002	2.5	-2.7	46	34					
24TH	280.00									137.3	-212.5	28.3	17.3	-14.1
		6.1	-8.4	2479	3002	2.5	-2.8	46	34					
25TH	292.50									131.2	-204.1	25.7	15.6	-13.5
		6.1	-8.6	2479	3002	2.5	-2.8	46	33					
26TH	305.00									125.1	-195.6	23.2	14.0	-12.9
		6.2	-8.7	2479	3002	2.5	-2.9	46	33					
27TH	317.50									118.9	-186.8	20.8	12.5	-12.3
		6.2	-8.9	2479	3002	2.5	-3.0	46	32					

TABLE 7. SHEAR AND MOMENT DIAGRAMS : 1999 BROADWAY TOWER
WIND DIRECTION 250 CONFIGURATION A REFERENCE PRESSURE 22.0 PSF GUST FACTOR 1.32

FLOOR	HEIGHT	FORCE (KIPS) X	FORCE (KIPS) Y	AREA (SQ FT) X	AREA (SQ FT) Y	PRESSURE (PSF) X	PRESSURE (PSF) Y	ECCEN (FT) X	ECCEN (FT) Y	SHEAR (KIPS) X	SHEAR (KIPS) Y	MOMENT (1000-FT-KIPS) X	MOMENT (1000-FT-KIPS) Y	MOMENT (1000-FT-KIPS) Z
28TH	330.00									112.7	-177.9	18.5	11.0	-11.7
		6.4	-9.2	2479	3002	2.6	-3.1	46	32					
29TH	342.50									106.3	-168.7	16.4	9.7	-11.1
		6.6	-9.5	2479	3002	2.7	-3.2	46	32					
30TH	355.00									99.7	-159.2	14.3	8.4	-10.4
		6.8	-9.8	2479	3002	2.7	-3.3	45	31					
31ST	367.50									93.0	-149.4	12.4	7.2	-9.8
		6.9	-10.1	2479	3002	2.8	-3.4	45	31					
32ND	380.00									86.0	-139.3	10.6	6.1	-9.1
		7.1	-10.3	2479	3002	2.9	-3.4	45	31					
33RD	392.50									78.9	-129.0	8.9	5.0	-8.4
		7.3	-10.6	2479	3002	2.9	-3.5	45	31					
34TH	405.00									71.7	-118.3	7.4	4.1	-7.7
		7.4	-10.9	2479	3002	3.0	-3.6	45	30					
35TH	417.50									64.2	-107.4	6.0	3.2	-7.0
		7.6	-11.3	2479	3002	3.1	-3.8	45	30					
36TH	430.00									56.7	-96.1	4.7	2.5	-6.3
		7.7	-11.7	2479	3002	3.1	-3.9	45	30					
37TH	442.50									49.0	-84.4	3.6	1.8	-5.5
		7.8	-12.1	2479	3002	3.2	-4.0	45	29					
38TH	455.00									41.2	-72.4	2.6	1.3	-4.7
		7.9	-12.4	2479	3002	3.2	-4.1	45	29					
39TH	467.50									33.2	-59.9	1.8	.8	-3.9
		8.1	-12.8	2479	3002	3.3	-4.3	45	28					
40TH	480.00									25.1	-47.1	1.1	.4	-3.1
		8.2	-13.2	2479	3002	3.3	-4.4	45	28					
41ST	492.50									16.9	-34.0	.6	.2	-2.3
		8.0	-12.9	2479	3002	3.2	-4.3	46	28					
42ND	505.00									8.9	-21.1	.2	.0	-1.5
		7.3	-11.7	2479	3002	3.0	-3.9	48	30					
43RD	517.50									1.6	-9.4	.0	-.1	-.7
		6.7	-10.6	2479	3002	2.7	-3.5	50	31					
PARA	530.00									-5.1	1.3	-.0	-.0	.0
		-5.1	1.3	1856	1929	-2.7	.7	1	3					
TOP	547.00									0.0	0.0	0.0	0.0	0.0

TABLE 7. SHEAR AND MOMENT DIAGRAMS : 1999 BROADWAY TOWER
WIND DIRECTION 260 CONFIGURATION A REFERENCE PRESSURE 22.0 PSF GUST FACTOR 1.32

FLOOR	HEIGHT	FORCE (KIPS) X	FORCE (KIPS) Y	AREA (SQ FT) X	AREA (SQ FT) Y	PRESSURE (PSF) X	PRESSURE (PSF) Y	ECCEN (FT) X	ECCEN (FT) Y	SHEAR (KIPS) X	SHEAR (KIPS) Y	MOMENT (1000-FT-KIPS) X	MOMENT (1000-FT-KIPS) Y	MOMENT (1000-FT-KIPS) Z
LBBY	0.00									211.5	-438.8	125.9	65.4	-28.2
		-4.2	-15.1	4067	3717	-1.0	-4.1	-0	0					
3RD	30.00									215.7	-423.7	113.0	59.0	-28.2
		-.7	-6.1	1885	1928	-.4	-3.2	20	-2					
4TH	42.50									216.4	-417.7	107.7	56.3	-28.0
		1.8	-8.8	2252	2592	.8	-3.4	50	10					
5TH	55.00									214.7	-408.8	102.5	53.6	-27.6
		3.4	-11.3	2479	3002	1.4	-3.8	62	18					
6TH	67.50									211.3	-397.5	97.5	50.9	-26.8
		3.7	-11.4	2479	3002	1.5	-3.8	63	20					
7TH	80.00									207.6	-386.1	92.6	48.3	-26.0
		4.0	-11.5	2479	3002	1.6	-3.8	64	22					
8TH	92.50									203.6	-374.6	87.8	45.7	-25.2
		4.4	-11.6	2479	3002	1.8	-3.9	65	24					
9TH	105.00									199.2	-363.0	83.2	43.2	-24.4
		4.7	-11.7	2479	3002	1.9	-3.9	65	26					
10TH	117.50									194.5	-351.3	78.8	40.7	-23.5
		5.0	-11.8	2479	3002	2.0	-3.9	66	28					
11TH	130.00									189.5	-339.5	74.5	38.3	-22.5
		5.3	-11.9	2479	3002	2.2	-4.0	67	30					
12TH	142.50									184.2	-327.6	70.3	36.0	-21.6
		5.5	-11.6	2479	3002	2.2	-3.9	65	31					
14TH	155.00									178.6	-316.0	66.3	33.7	-20.7
		5.7	-11.0	2479	3002	2.3	-3.7	63	32					
15TH	167.50									173.0	-305.0	62.4	31.5	-19.8
		5.8	-10.5	2479	3002	2.3	-3.5	60	33					
16TH	180.00									167.2	-294.5	58.6	29.4	-19.0
		5.9	-9.9	2479	3002	2.4	-3.3	57	34					
17TH	192.50									161.2	-284.6	55.0	27.4	-18.2
		6.1	-9.4	2479	3002	2.4	-3.1	54	35					
18TH	205.00									155.2	-275.3	51.5	25.4	-17.5
		6.2	-8.8	2479	3002	2.5	-2.9	50	36					
19TH	217.50									149.0	-266.5	48.1	23.5	-16.8
		6.3	-8.3	2479	3002	2.6	-2.7	47	36					
20TH	230.00									142.6	-258.2	44.8	21.7	-16.2
		6.3	-8.0	2479	3002	2.5	-2.6	45	36					
21ST	242.50									136.3	-250.3	41.7	19.9	-15.6
		6.1	-7.9	2479	3002	2.5	-2.6	45	35					
22ND	255.00									130.2	-242.4	38.6	18.2	-15.1
		6.0	-7.8	2479	3002	2.4	-2.6	45	34					
23RD	267.50									124.2	-234.5	35.6	16.7	-14.5
		5.8	-7.8	2479	3002	2.3	-2.6	45	34					
24TH	280.00									118.4	-226.7	32.7	15.1	-13.9
		5.6	-7.7	2479	3002	2.3	-2.6	45	33					
25TH	292.50									112.7	-219.0	29.9	13.7	-13.4
		5.5	-7.7	2479	3002	2.2	-2.6	45	32					
26TH	305.00									107.3	-211.3	27.3	12.3	-12.9
		5.3	-7.6	2479	3002	2.1	-2.5	45	31					
27TH	317.50									102.0	-203.6	24.7	11.0	-12.4
		5.2	-7.7	2479	3002	2.1	-2.6	46	31					

TABLE 7. SHEAR AND MOMENT DIAGRAMS : 1999 BROADWAY TOWER
WIND DIRECTION 260 CONFIGURATION A REFERENCE PRESSURE 22.0 PSF GUST FACTOR 1.32

FLOOR	HEIGHT	FORCE (KIPS) X	FORCE (KIPS) Y	AREA (SQ FT) X	AREA (SQ FT) Y	PRESSURE (PSF) X	PRESSURE (PSF) Y	ECCEN (FT) X	ECCEN (FT) Y	SHEAR (KIPS) X	SHEAR (KIPS) Y	MOMENT (1000-FT-KIPS) X	MOMENT (1000-FT-KIPS) Y	MOMENT (1000-FT-KIPS) Z
28TH	330.00									96.8	-195.9	22.2	9.8	-11.9
		5.3	-8.1	2479	3002	2.1	-2.7	47	30					
29TH	342.50									91.5	-187.8	19.8	8.6	-11.3
		5.4	-8.5	2479	3002	2.2	-2.8	47	30					
30TH	355.00									86.1	-179.3	17.5	7.5	-10.8
		5.5	-8.9	2479	3002	2.2	-2.9	48	30					
31ST	367.50									80.6	-170.5	15.3	6.4	-10.2
		5.6	-9.2	2479	3002	2.3	-3.1	49	30					
32ND	380.00									75.0	-161.3	13.2	5.5	-9.6
		5.7	-9.6	2479	3002	2.3	-3.2	50	29					
33RD	392.50									69.3	-151.7	11.3	4.6	-8.9
		5.8	-10.0	2479	3002	2.3	-3.3	50	29					
34TH	405.00									63.6	-141.7	9.4	3.7	-8.2
		5.9	-10.6	2479	3002	2.4	-3.5	50	28					
35TH	417.50									57.6	-131.1	7.7	3.0	-7.5
		6.2	-11.6	2479	3002	2.5	-3.9	50	27					
36TH	430.00									51.4	-119.5	6.2	2.3	-6.8
		6.5	-12.6	2479	3002	2.6	-4.2	49	25					
37TH	442.50									44.9	-106.8	4.7	1.7	-6.0
		6.8	-13.6	2479	3002	2.7	-4.5	48	24					
38TH	455.00									38.2	-93.2	3.5	1.2	-5.2
		7.0	-14.7	2479	3002	2.8	-4.9	48	23					
39TH	467.50									31.1	-78.5	2.4	.7	-4.3
		7.3	-15.7	2479	3002	3.0	-5.2	48	22					
40TH	480.00									23.8	-62.9	1.5	.4	-3.4
		7.6	-16.7	2479	3002	3.1	-5.6	47	21					
41ST	492.50									16.2	-46.2	.8	.2	-2.5
		7.6	-16.6	2479	3002	3.1	-5.5	46	21					
42ND	505.00									8.6	-29.5	.4	-.0	-1.5
		7.1	-15.2	2479	3002	2.9	-5.1	45	21					
43RD	517.50									1.5	-14.4	.1	-.1	-.7
		6.7	-13.7	2479	3002	2.7	-4.6	44	21					
PARA	530.00									-5.2	-.7	.0	-.0	.0
		-5.2	-.7	1856	1929	-2.8	-.4	-1	8					
TOP	547.00									0.0	0.0	0.0	0.0	0.0

TABLE 7. SHEAR AND MOMENT DIAGRAMS : 1999 BROADWAY TOWER
WIND DIRECTION 270 CONFIGURATION A REFERENCE PRESSURE 22.0 PSF GUST FACTOR 1.32

FLOOR	HEIGHT	FORCE (KIPS) X	FORCE (KIPS) Y	AREA (SQ FT) X	AREA (SQ FT) Y	PRESSURE (PSF) X	PRESSURE (PSF) Y	ECCEN (FT) X	ECCEN (FT) Y	SHEAR (KIPS) X	SHEAR (KIPS) Y	MOMENT (1000-FT-KIPS) X	MOMENT (1000-FT-KIPS) Y	MOMENT (1000-FT-KIPS) Z
LBBY	0.00									63.1	-416.5	115.4	14.1	-23.0
		-4.7	-15.2	4067	3717	-1.1	-4.1	3	-1					
3RD	30.00									67.8	-401.2	103.1	12.2	-22.9
		-1.3	-6.1	1885	1928	-.7	-3.2	17	-4					
4TH	42.50									69.1	-395.1	98.1	11.3	-22.8
		.5	-8.7	2252	2592	.2	-3.4	47	3					
5TH	55.00									68.6	-386.4	93.3	10.4	-22.4
		1.6	-11.0	2479	3002	.7	-3.7	59	9					
6TH	67.50									67.0	-375.4	88.5	9.6	-21.7
		1.8	-11.0	2479	3002	.7	-3.7	59	10					
7TH	80.00									65.1	-364.4	83.9	8.8	-21.1
		2.0	-11.0	2479	3002	.8	-3.7	60	11					
8TH	92.50									63.1	-353.4	79.4	8.0	-20.4
		2.2	-11.1	2479	3002	.9	-3.7	60	12					
9TH	105.00									60.9	-342.3	75.0	7.2	-19.7
		2.4	-11.1	2479	3002	1.0	-3.7	61	13					
10TH	117.50									58.5	-331.2	70.8	6.4	-19.0
		2.6	-11.1	2479	3002	1.0	-3.7	61	14					
11TH	130.00									55.9	-320.1	66.8	5.7	-18.3
		2.8	-11.1	2479	3002	1.1	-3.7	61	15					
12TH	142.50									53.1	-308.9	62.8	5.0	-17.5
		2.9	-10.9	2479	3002	1.2	-3.6	61	16					
14TH	155.00									50.2	-298.0	59.0	4.4	-16.8
		3.0	-10.6	2479	3002	1.2	-3.5	59	17					
15TH	167.50									47.1	-287.4	55.4	3.8	-16.1
		3.1	-10.2	2479	3002	1.3	-3.4	58	18					
16TH	180.00									44.0	-277.2	51.9	3.2	-15.5
		3.2	-9.9	2479	3002	1.3	-3.3	57	19					
17TH	192.50									40.8	-267.3	48.4	2.7	-14.9
		3.4	-9.6	2479	3002	1.4	-3.2	55	19					
18TH	205.00									37.4	-257.8	45.2	2.2	-14.3
		3.5	-9.2	2479	3002	1.4	-3.1	54	20					
19TH	217.50									33.9	-248.5	42.0	1.8	-13.7
		3.6	-8.9	2479	3002	1.4	-3.0	52	21					
20TH	230.00									30.4	-239.7	39.0	1.4	-13.2
		3.5	-8.7	2479	3002	1.4	-2.9	51	21					
21ST	242.50									26.8	-231.0	36.0	1.0	-12.7
		3.3	-8.7	2479	3002	1.3	-2.9	52	20					
22ND	255.00									23.5	-222.3	33.2	.7	-12.1
		3.1	-8.6	2479	3002	1.3	-2.9	52	19					
23RD	267.50									20.4	-213.7	30.5	.4	-11.6
		3.0	-8.6	2479	3002	1.2	-2.9	52	18					
24TH	280.00									17.4	-205.0	27.8	.2	-11.1
		2.8	-8.6	2479	3002	1.1	-2.9	53	17					
25TH	292.50									14.6	-196.4	25.3	-.0	-10.6
		2.6	-8.6	2479	3002	1.0	-2.9	53	16					
26TH	305.00									12.0	-187.9	22.9	-.2	-10.1
		2.4	-8.6	2479	3002	1.0	-2.9	53	15					
27TH	317.50									9.7	-179.3	20.6	-.3	-9.6
		2.2	-8.6	2479	3002	.9	-2.9	54	14					

TABLE 7. SHEAR AND MOMENT DIAGRAMS : 1999 BROADWAY TOWER
WIND DIRECTION 270 CONFIGURATION A REFERENCE PRESSURE 22.0 PSF GUST FACTOR 1.32

FLOOR	HEIGHT	FORCE (KIPS) X	FORCE (KIPS) Y	AREA (SQ FT) X	AREA (SQ FT) Y	PRESSURE (PSF) X	PRESSURE (PSF) Y	ECCEN (FT) X	ECCEN (FT) Y	SHEAR (KIPS) X	SHEAR (KIPS) Y	MOMENT (1000-FT-KIPS) X	MOMENT (1000-FT-KIPS) Y	MOMENT (1000-FT-KIPS) Z
28TH	330.00									7.5	-170.7	18.4	-.4	-9.1
		2.0	-8.7	2479	3002	.8	-2.9	54	12					
29TH	342.50									5.5	-162.0	16.4	-.5	-8.7
		1.8	-8.8	2479	3002	.7	-2.9	54	11					
30TH	355.00									3.7	-153.2	14.4	-.6	-8.2
		1.6	-8.9	2479	3002	.6	-3.0	54	9					
31ST	367.50									2.1	-144.3	12.5	-.6	-7.7
		1.3	-9.0	2479	3002	.5	-3.0	54	8					
32ND	380.00									.8	-135.2	10.8	-.6	-7.2
		1.1	-9.2	2479	3002	.5	-3.0	54	7					
33RD	392.50									-.3	-126.1	9.2	-.6	-6.7
		.9	-9.3	2479	3002	.4	-3.1	54	5					
34TH	405.00									-1.3	-116.8	7.6	-.6	-6.2
		.8	-9.6	2479	3002	.3	-3.2	53	4					
35TH	417.50									-2.0	-107.3	6.2	-.6	-5.7
		.7	-10.2	2479	3002	.3	-3.4	54	4					
36TH	430.00									-2.8	-97.1	5.0	-.6	-5.1
		.7	-10.8	2479	3002	.3	-3.6	54	3					
37TH	442.50									-3.5	-86.3	3.8	-.5	-4.5
		.6	-11.4	2479	3002	.3	-3.8	54	3					
38TH	455.00									-4.1	-74.8	2.8	-.5	-3.9
		.6	-12.0	2479	3002	.2	-4.0	54	3					
39TH	467.50									-4.7	-62.8	1.9	-.4	-3.2
		.5	-12.7	2479	3002	.2	-4.2	54	2					
40TH	480.00									-5.2	-50.1	1.2	-.4	-2.6
		.5	-13.3	2479	3002	.2	-4.4	54	2					
41ST	492.50									-5.7	-36.8	.7	-.3	-1.8
		.4	-13.1	2479	3002	.2	-4.4	54	2					
42ND	505.00									-6.2	-23.7	.3	-.2	-1.1
		.4	-11.8	2479	3002	.2	-3.9	53	2					
43RD	517.50									-6.6	-11.9	.1	-.1	-.5
		.4	-10.5	2479	3002	.1	-3.5	51	2					
PARA	530.00									-6.9	-1.4	.0	-.1	.0
		-6.9	-1.4	1856	1929	-3.7	-.7	-1	4					
TOP	547.00									0.0	0.0	0.0	0.0	0.0

TABLE 7. SHEAR AND MOMENT DIAGRAMS : 1999 BROADWAY TOWER
WIND DIRECTION 280 CONFIGURATION A REFERENCE PRESSURE 22.0 PSF GUST FACTOR 1.32

FLOOR	HEIGHT	FORCE (KIPS) X	FORCE (KIPS) Y	AREA (SQ FT) X	AREA (SQ FT) Y	PRESSURE (PSF) X	PRESSURE (PSF) Y	ECCEN (FT) X	ECCEN (FT) Y	SHEAR (KIPS) X	SHEAR (KIPS) Y	MOMENT (1000-FT-KIPS) X	MOMENT (1000-FT-KIPS) Y	MOMENT (1000-FT-KIPS) Z
LBBY	0.00									-278.5	-450.6	128.1	-90.6	-13.6
		-10.2	-17.9	4067	3717	-2.5	-4.8	4	-2					
3RD	30.00									-268.3	-432.7	114.8	-82.4	-13.5
		-4.9	-7.3	1885	1928	-2.6	-3.8	8	-5					
4TH	42.50									-263.4	-425.3	109.5	-79.1	-13.4
		-4.8	-8.9	2252	2592	-2.1	-3.4	19	-10					
5TH	55.00									-258.6	-416.4	104.2	-75.8	-13.2
		-4.5	-10.1	2479	3002	-1.8	-3.4	26	-12					
6TH	67.50									-254.1	-406.3	99.1	-72.6	-12.8
		-4.4	-10.3	2479	3002	-1.8	-3.4	27	-12					
7TH	80.00									-249.7	-396.0	94.0	-69.4	-12.5
		-4.3	-10.5	2479	3002	-1.8	-3.5	29	-12					
8TH	92.50									-245.3	-385.5	89.2	-66.3	-12.2
		-4.3	-10.8	2479	3002	-1.7	-3.6	30	-12					
9TH	105.00									-241.1	-374.7	84.4	-63.3	-11.8
		-4.2	-11.0	2479	3002	-1.7	-3.7	32	-12					
10TH	117.50									-236.9	-363.7	79.8	-60.3	-11.4
		-4.1	-11.2	2479	3002	-1.7	-3.7	33	-12					
11TH	130.00									-232.8	-352.5	75.3	-57.4	-11.0
		-4.0	-11.4	2479	3002	-1.6	-3.8	34	-12					
12TH	142.50									-228.8	-341.1	71.0	-54.5	-10.5
		-4.0	-11.3	2479	3002	-1.6	-3.8	34	-12					
14TH	155.00									-224.8	-329.8	66.8	-51.7	-10.1
		-4.0	-11.0	2479	3002	-1.6	-3.7	33	-12					
15TH	167.50									-220.7	-318.7	62.7	-48.9	-9.7
		-4.1	-10.8	2479	3002	-1.6	-3.6	32	-12					
16TH	180.00									-216.7	-308.0	58.8	-46.1	-9.3
		-4.1	-10.5	2479	3002	-1.7	-3.5	31	-12					
17TH	192.50									-212.5	-297.5	55.0	-43.5	-8.9
		-4.1	-10.2	2479	3002	-1.7	-3.4	30	-12					
18TH	205.00									-208.4	-287.3	51.4	-40.8	-8.5
		-4.2	-9.9	2479	3002	-1.7	-3.3	29	-12					
19TH	217.50									-204.2	-277.3	47.9	-38.3	-8.2
		-4.2	-9.7	2479	3002	-1.7	-3.2	28	-12					
20TH	230.00									-200.0	-267.7	44.4	-35.7	-7.9
		-4.4	-9.5	2479	3002	-1.8	-3.2	26	-12					
21ST	242.50									-195.6	-258.1	41.2	-33.3	-7.6
		-4.7	-9.5	2479	3002	-1.9	-3.2	25	-12					
22ND	255.00									-191.0	-248.7	38.0	-30.8	-7.3
		-4.9	-9.4	2479	3002	-2.0	-3.1	23	-12					
23RD	267.50									-186.0	-239.2	34.9	-28.5	-7.0
		-5.2	-9.4	2479	3002	-2.1	-3.1	22	-12					
24TH	280.00									-180.8	-229.8	32.0	-26.2	-6.7
		-5.5	-9.4	2479	3002	-2.2	-3.1	20	-12					
25TH	292.50									-175.3	-220.4	29.2	-24.0	-6.5
		-5.8	-9.3	2479	3002	-2.3	-3.1	19	-12					
26TH	305.00									-169.6	-211.1	26.5	-21.8	-6.2
		-6.0	-9.3	2479	3002	-2.4	-3.1	18	-11					
27TH	317.50									-163.5	-201.8	23.9	-19.7	-6.0
		-6.4	-9.3	2479	3002	-2.6	-3.1	16	-11					

TABLE 7. SHEAR AND MOMENT DIAGRAMS : 1999 BROADWAY TOWER
WIND DIRECTION 280 CONFIGURATION A REFERENCE PRESSURE 22.0 PSF GUST FACTOR 1.32

FLOOR	HEIGHT	FORCE (KIPS) X	FORCE (KIPS) Y	AREA (SQ FT) X	AREA (SQ FT) Y	PRESSURE (PSF) X	PRESSURE (PSF) Y	ECCEN (FT) X	ECCEN (FT) Y	SHEAR (KIPS) X	SHEAR (KIPS) Y	MOMENT (1000-FT-KIPS) X	MOMENT (1000-FT-KIPS) Y	MOMENT (1000-FT-KIPS) Z
28TH	330.00									-157.1	-192.4	21.5	-17.7	-5.8
		-6.8	-9.5	2479	3002	-2.7	-3.2	15	-11					
29TH	342.50									-150.4	-183.0	19.1	-15.8	-5.6
		-7.2	-9.6	2479	3002	-2.9	-3.2	14	-11					
30TH	355.00									-143.2	-173.4	16.9	-14.0	-5.4
		-7.6	-9.7	2479	3002	-3.1	-3.2	13	-10					
31ST	367.50									-135.6	-163.6	14.8	-12.2	-5.1
		-8.0	-9.9	2479	3002	-3.2	-3.3	12	-10					
32ND	380.00									-127.7	-153.8	12.8	-10.6	-4.9
		-8.4	-10.0	2479	3002	-3.4	-3.3	12	-10					
33RD	392.50									-119.3	-143.8	10.9	-9.0	-4.7
		-8.8	-10.1	2479	3002	-3.5	-3.4	11	-9					
34TH	405.00									-110.5	-133.6	9.2	-7.6	-4.6
		-9.2	-10.5	2479	3002	-3.7	-3.5	11	-10					
35TH	417.50									-101.3	-123.2	7.6	-6.3	-4.3
		-9.5	-11.1	2479	3002	-3.8	-3.7	14	-12					
36TH	430.00									-91.8	-112.1	6.1	-5.1	-4.1
		-9.9	-11.7	2479	3002	-4.0	-3.9	16	-14					
37TH	442.50									-81.9	-100.4	4.8	-4.0	-3.7
		-10.3	-12.3	2479	3002	-4.1	-4.1	18	-15					
38TH	455.00									-71.6	-88.1	3.6	-3.0	-3.4
		-10.6	-12.9	2479	3002	-4.3	-4.3	20	-17					
39TH	467.50									-61.0	-75.1	2.6	-2.2	-2.9
		-11.0	-13.6	2479	3002	-4.4	-4.5	22	-18					
40TH	480.00									-50.0	-61.6	1.7	-1.5	-2.4
		-11.4	-14.2	2479	3002	-4.6	-4.7	24	-19					
41ST	492.50									-38.6	-47.4	1.1	-.9	-1.9
		-11.0	-14.2	2479	3002	-4.4	-4.7	26	-20					
42ND	505.00									-27.6	-33.2	.6	-.5	-1.3
		-9.8	-13.5	2479	3002	-3.9	-4.5	29	-21					
43RD	517.50									-17.8	-19.7	.2	-.2	-.7
		-8.5	-12.7	2479	3002	-3.4	-4.2	32	-22					
PARA	530.00									-9.3	-7.0	.1	-.1	-.1
		-9.3	-7.0	1856	1929	-5.0	-3.6	4	-6					
TOP	547.00									0.0	0.0	0.0	0.0	0.0

TABLE 7. SHEAR AND MOMENT DIAGRAMS : 1999 BROADWAY TOWER
WIND DIRECTION 290 CONFIGURATION A REFERENCE PRESSURE 22.0 PSF GUST FACTOR 1.32

FLOOR	HEIGHT	FORCE (KIPS) X	FORCE (KIPS) Y	AREA (SQ FT) X	AREA (SQ FT) Y	PRESSURE (PSF) X	PRESSURE (PSF) Y	ECCEN (FT) X	ECCEN (FT) Y	SHEAR (KIPS) X	SHEAR (KIPS) Y	MOMENT (1000-FT-KIPS) X	MOMENT (1000-FT-KIPS) Y	MOMENT (1000-FT-KIPS) Z
LBBY	0.00									-782.0	-669.8	199.0	-236.1	-10.5
		-25.3	-21.5	4067	3717	-6.2	-5.8	-1	1					
3RD	30.00									-756.7	-648.3	179.3	-213.0	-10.6
		-11.6	-9.4	1885	1928	-6.1	-4.9	-0	0					
4TH	42.50									-745.1	-638.9	171.2	-203.6	-10.6
		-13.4	-12.2	2252	2592	-5.9	-4.7	5	-5					
5TH	55.00									-731.7	-626.7	163.3	-194.4	-10.5
		-14.3	-13.7	2479	3002	-5.8	-4.6	6	-6					
6TH	67.50									-717.5	-613.0	155.6	-185.3	-10.3
		-14.6	-14.0	2479	3002	-5.9	-4.7	7	-7					
7TH	80.00									-702.9	-599.0	148.0	-176.4	-10.1
		-14.8	-14.3	2479	3002	-6.0	-4.8	8	-8					
8TH	92.50									-688.1	-584.6	140.6	-167.7	-9.9
		-15.1	-14.7	2479	3002	-6.1	-4.9	9	-9					
9TH	105.00									-673.0	-570.0	133.4	-159.2	-9.6
		-15.4	-15.0	2479	3002	-6.2	-5.0	10	-10					
10TH	117.50									-657.6	-554.9	126.3	-150.9	-9.3
		-15.6	-15.4	2479	3002	-6.3	-5.1	11	-11					
11TH	130.00									-642.0	-539.6	119.5	-142.8	-9.0
		-15.9	-15.7	2479	3002	-6.4	-5.2	11	-12					
12TH	142.50									-626.1	-523.9	112.9	-134.9	-8.6
		-15.9	-15.5	2479	3002	-6.4	-5.2	11	-11					
14TH	155.00									-610.2	-508.4	106.4	-127.1	-8.3
		-15.9	-15.2	2479	3002	-6.4	-5.1	10	-11					
15TH	167.50									-594.3	-493.2	100.1	-119.6	-7.9
		-15.9	-14.8	2479	3002	-6.4	-4.9	9	-10					
16TH	180.00									-578.4	-478.4	94.1	-112.3	-7.6
		-15.8	-14.5	2479	3002	-6.4	-4.8	8	-9					
17TH	192.50									-562.6	-463.9	88.2	-105.1	-7.4
		-15.8	-14.1	2479	3002	-6.4	-4.7	7	-8					
18TH	205.00									-546.8	-449.8	82.5	-98.2	-7.2
		-15.7	-13.8	2479	3002	-6.3	-4.6	6	-7					
19TH	217.50									-531.1	-436.0	76.9	-91.5	-7.0
		-15.7	-13.4	2479	3002	-6.3	-4.5	5	-6					
20TH	230.00									-515.4	-422.6	71.6	-84.9	-6.8
		-15.9	-13.3	2479	3002	-6.4	-4.4	4	-5					
21ST	242.50									-499.6	-409.3	66.4	-78.6	-6.7
		-16.3	-13.5	2479	3002	-6.6	-4.5	4	-5					
22ND	255.00									-483.3	-395.8	61.3	-72.4	-6.5
		-16.7	-13.7	2479	3002	-6.7	-4.6	4	-4					
23RD	267.50									-466.6	-382.1	56.5	-66.5	-6.4
		-17.1	-13.9	2479	3002	-6.9	-4.6	3	-4					
24TH	280.00									-449.5	-368.2	51.8	-60.8	-6.3
		-17.5	-14.1	2479	3002	-7.1	-4.7	3	-4					
25TH	292.50									-431.9	-354.2	47.3	-55.3	-6.2
		-18.0	-14.2	2479	3002	-7.2	-4.7	3	-3					
26TH	305.00									-414.0	-340.0	42.9	-50.0	-6.1
		-18.4	-14.4	2479	3002	-7.4	-4.8	2	-3					
27TH	317.50									-395.6	-325.5	38.8	-44.9	-6.0
		-18.9	-14.7	2479	3002	-7.6	-4.9	2	-3					

TABLE 7. SHEAR AND MOMENT DIAGRAMS : 1999 BROADWAY TOWER
WIND DIRECTION 290 CONFIGURATION A REFERENCE PRESSURE 22.0 PSF GUST FACTOR 1.32

FLOOR	HEIGHT	FORCE (KIPS) X	FORCE (KIPS) Y	AREA (SQ FT) X	AREA (SQ FT) Y	PRESSURE (PSF) X	PRESSURE (PSF) Y	ECCEN (FT) X	ECCEN (FT) Y	SHEAR (KIPS) X	SHEAR (KIPS) Y	MOMENT (1000-FT-KIPS) X	MOMENT (1000-FT-KIPS) Y	MOMENT (1000-FT-KIPS) Z
28TH	330.00	-19.5	-15.0	2479	3002	-7.9	-5.0	2	-3	-376.7	-310.9	34.8	-49.1	-5.9
29TH	342.50	-20.1	-15.4	2479	3002	-8.1	-5.1	3	-3	-357.3	-295.9	31.0	-35.5	-5.8
30TH	355.00	-20.7	-15.7	2479	3002	-8.3	-5.2	3	-4	-337.2	-280.5	27.4	-31.2	-5.7
31ST	367.50	-21.3	-16.1	2479	3002	-8.6	-5.4	3	-4	-316.5	-264.8	24.0	-27.1	-5.6
32ND	380.00	-21.9	-16.4	2479	3002	-8.8	-5.5	3	-4	-295.2	-248.7	20.8	-23.3	-5.5
33RD	392.50	-22.5	-16.8	2479	3002	-9.1	-5.6	3	-5	-273.3	-232.3	17.8	-19.7	-5.3
34TH	405.00	-23.1	-17.3	2479	3002	-9.3	-5.8	4	-6	-250.8	-215.5	15.0	-16.4	-5.1
35TH	417.50	-23.5	-18.0	2479	3002	-9.5	-6.0	6	-7	-227.8	-198.3	12.4	-13.4	-4.9
36TH	430.00	-24.0	-18.8	2479	3002	-9.7	-6.3	7	-9	-204.3	-180.2	10.0	-10.7	-4.7
37TH	442.50	-24.4	-19.6	2479	3002	-9.9	-6.5	8	-10	-180.3	-161.4	7.9	-8.3	-4.3
38TH	455.00	-24.9	-20.3	2479	3002	-10.0	-6.8	10	-12	-155.9	-141.8	6.0	-6.2	-3.9
39TH	467.50	-25.3	-21.1	2479	3002	-10.2	-7.0	11	-13	-131.0	-121.5	4.3	-4.4	-3.4
40TH	480.00	-25.8	-21.9	2479	3002	-10.4	-7.3	12	-14	-105.7	-100.4	3.0	-3.0	-2.9
41ST	492.50	-24.8	-22.0	2479	3002	-10.0	-7.3	14	-15	-79.9	-78.5	1.8	-1.8	-2.2
42ND	505.00	-22.0	-21.4	2479	3002	-8.9	-7.1	16	-16	-55.1	-56.5	1.0	-1.0	-1.6
43RD	517.50	-19.2	-20.8	2479	3002	-7.7	-6.9	19	-17	-33.1	-35.1	.4	-.4	-.9
PARA	530.00	-13.9	-14.3	1856	1929	-7.5	-7.4	6	-5	-13.9	-14.3	.1	-.1	-.2
TOP	547.00									0.0	0.0	0.0	0.0	0.0

TABLE 7. SHEAR AND MOMENT DIAGRAMS : 1999 BROADWAY TOWER
WIND DIRECTION 300 CONFIGURATION A REFERENCE PRESSURE 22.0 PSF GUST FACTOR 1.32

FLOOR	HEIGHT	FORCE (KIPS) X	FORCE (KIPS) Y	AREA (SQ FT) X	AREA (SQ FT) Y	PRESSURE (PSF) X	PRESSURE (PSF) Y	ECCEN (FT) X	ECCEN (FT) Y	SHEAR (KIPS) X	SHEAR (KIPS) Y	MOMENT (1000-FT-KIPS) X	MOMENT (1000-FT-KIPS) Y	MOMENT (1000-FT-KIPS) Z
LBBY	0.00									-984.4	-640.5	185.0	-311.2	-4.4
3RD	30.00	-27.9	-22.1	4067	3717	-6.9	-6.0	-2	2	-956.4	-618.3	166.2	-282.1	-4.5
4TH	42.50	-12.6	-9.6	1885	1928	-6.7	-5.0	-1	1	-943.8	-608.7	158.5	-270.2	-4.5
5TH	55.00	-15.0	-12.2	2252	2592	-6.7	-4.7	2	-2	-928.8	-596.6	151.0	-258.5	-4.5
6TH	67.50	-16.2	-13.4	2479	3002	-6.5	-4.5	2	-2	-912.6	-583.1	143.6	-247.0	-4.4
7TH	80.00	-16.3	-13.8	2479	3002	-6.6	-4.6	3	-3	-896.3	-569.3	136.4	-235.7	-4.3
8TH	92.50	-16.4	-14.2	2479	3002	-6.6	-4.7	4	-4	-879.9	-555.1	129.4	-224.6	-4.2
9TH	105.00	-16.5	-14.6	2479	3002	-6.6	-4.9	4	-5	-863.4	-540.5	122.5	-213.7	-4.1
10TH	117.50	-16.6	-14.9	2479	3002	-6.7	-5.0	5	-6	-846.8	-525.6	115.8	-203.0	-3.9
11TH	130.00	-16.7	-15.3	2479	3002	-6.7	-5.1	6	-7	-830.1	-510.3	109.4	-192.5	-3.7
12TH	142.50	-16.8	-15.7	2479	3002	-6.8	-5.2	7	-8	-813.4	-494.6	103.1	-182.2	-3.4
14TH	155.00	-16.9	-15.7	2479	3002	-6.8	-5.2	7	-8	-796.4	-479.0	97.0	-172.2	-3.2
15TH	167.50	-17.2	-15.4	2479	3002	-6.9	-5.1	6	-7	-779.3	-463.5	91.1	-162.3	-3.0
16TH	180.00	-17.4	-15.2	2479	3002	-7.0	-5.1	5	-6	-761.9	-448.3	85.4	-152.7	-2.8
17TH	192.50	-17.6	-15.0	2479	3002	-7.1	-5.0	4	-5	-744.3	-433.3	79.9	-143.3	-2.6
18TH	205.00	-17.8	-14.8	2479	3002	-7.2	-4.9	4	-4	-726.5	-418.5	74.6	-134.1	-2.5
19TH	217.50	-18.0	-14.6	2479	3002	-7.3	-4.9	3	-3	-708.5	-403.9	69.4	-125.1	-2.4
20TH	230.00	-18.2	-14.4	2479	3002	-7.4	-4.8	2	-3	-690.2	-389.5	64.5	-116.4	-2.3
21ST	242.50	-18.7	-14.3	2479	3002	-7.6	-4.8	1	-2	-671.5	-375.2	59.7	-107.9	-2.2
22ND	255.00	-19.5	-14.2	2479	3002	-7.9	-4.7	1	-1	-652.0	-361.0	55.1	-99.6	-2.2
23RD	267.50	-20.2	-14.2	2479	3002	-8.2	-4.7	1	-1	-631.8	-346.8	50.7	-91.6	-2.2
24TH	280.00	-21.0	-14.1	2479	3002	-8.5	-4.7	0	-0	-610.9	-332.7	46.4	-83.8	-2.2
25TH	292.50	-21.7	-14.1	2479	3002	-8.8	-4.7	-0	0	-589.2	-318.6	42.4	-76.3	-2.2
26TH	305.00	-22.4	-14.0	2479	3002	-9.1	-4.7	-1	1	-566.7	-304.6	38.5	-69.1	-2.2
27TH	317.50	-23.2	-14.0	2479	3002	-9.4	-4.7	-1	1	-543.6	-290.6	34.7	-62.1	-2.3
		-24.1	-14.0	2479	3002	-9.7	-4.7	-1	2					

TABLE 7. SHEAR AND MOMENT DIAGRAMS : 1999 BROADWAY TOWER
WIND DIRECTION 300 CONFIGURATION A REFERENCE PRESSURE 22.0 PSF GUST FACTOR 1.32

FLOOR	HEIGHT	FORCE (KIPS) X	FORCE (KIPS) Y	AREA (SQ FT) X	AREA (SQ FT) Y	PRESSURE (PSF) X	PRESSURE (PSF) Y	ECCEN (FT) X	ECCEN (FT) Y	SHEAR (KIPS) X	SHEAR (KIPS) Y	MOMENT (1000-FT-KIPS) X	MOMENT (1000-FT-KIPS) Y	MOMENT (1000-FT-KIPS) Z
28TH	330.00									-519.5	-276.7	31.2	-55.5	-2.3
		-25.3	-14.0	2479	3002	-10.2	-4.7	-1	2					
29TH	342.50									-494.2	-262.6	27.8	-49.1	-2.4
		-26.6	-14.1	2479	3002	-10.7	-4.7	-1	2					
30TH	355.00									-467.6	-248.5	24.6	-43.1	-2.4
		-27.8	-14.2	2479	3002	-11.2	-4.7	-1	2					
31ST	367.50									-439.8	-234.3	21.6	-37.5	-2.5
		-29.0	-14.3	2479	3002	-11.7	-4.7	-1	1					
32ND	380.00									-410.8	-220.1	18.8	-32.2	-2.5
		-30.3	-14.3	2479	3002	-12.2	-4.8	-1	1					
33RD	392.50									-380.5	-205.7	16.1	-27.2	-2.6
		-31.5	-14.4	2479	3002	-12.7	-4.8	-1	1					
34TH	405.00									-349.0	-191.4	13.6	-22.6	-2.6
		-32.5	-14.7	2479	3002	-13.1	-4.9	-0	1					
35TH	417.50									-316.5	-176.6	11.3	-18.5	-2.7
		-33.1	-15.4	2479	3002	-13.3	-5.1	0	-1					
36TH	430.00									-283.4	-161.2	9.2	-14.7	-2.6
		-33.6	-16.1	2479	3002	-13.6	-5.4	1	-2					
37TH	442.50									-249.8	-145.1	7.3	-11.4	-2.5
		-34.2	-16.8	2479	3002	-13.8	-5.6	2	-4					
38TH	455.00									-215.6	-128.3	5.6	-8.5	-2.4
		-34.7	-17.6	2479	3002	-14.0	-5.8	2	-5					
39TH	467.50									-180.8	-110.7	4.1	-6.0	-2.2
		-35.3	-18.3	2479	3002	-14.2	-6.1	3	-6					
40TH	480.00									-145.5	-92.4	2.8	-4.0	-1.9
		-35.9	-19.0	2479	3002	-14.5	-6.3	4	-7					
41ST	492.50									-109.6	-73.4	1.8	-2.4	-1.6
		-34.8	-19.4	2479	3002	-14.0	-6.5	5	-9					
42ND	505.00									-74.9	-54.1	1.0	-1.2	-1.2
		-31.5	-19.3	2479	3002	-12.7	-6.4	7	-11					
43RD	517.50									-43.4	-34.7	.4	-.5	-.7
		-28.2	-19.3	2479	3002	-11.4	-6.4	9	-14					
PARA	530.00									-15.1	-15.4	.1	-.1	-.1
		-15.1	-15.4	1856	1929	-8.2	-8.0	4	-4					
TOP	547.00									0.0	0.0	0.0	0.0	0.0

TABLE 7. SHEAR AND MOMENT DIAGRAMS : 1999 BROADWAY TOWER
WIND DIRECTION 310 CONFIGURATION A REFERENCE PRESSURE 22.0 PSF GUST FACTOR 1.32

FLOOR	HEIGHT	FORCE (KIPS) X	FORCE (KIPS) Y	AREA (SQ FT) X	AREA (SQ FT) Y	PRESSURE (PSF) X	PRESSURE (PSF) Y	ECCEN (FT) X	ECCEN (FT) Y	SHEAR (KIPS) X	SHEAR (KIPS) Y	MOMENT (1000-FT-KIPS) X	MOMENT (1000-FT-KIPS) Y	MOMENT (1000-FT-KIPS) Z
LBBY	0.00									-1190.2	-168.6	24.5	-369.9	15.3
		-29.3	-11.8	4067	3717	-7.2	-3.2	-1	2					
3RD	30.00									-1160.9	-156.8	19.6	-334.7	15.2
		-12.7	-5.8	1885	1928	-6.7	-3.0	-2	4					
4TH	42.50									-1148.2	-151.1	17.7	-320.2	15.1
		-17.3	-7.3	2252	2592	-7.7	-2.8	-1	3					
5TH	55.00									-1130.9	-143.8	15.8	-306.0	15.1
		-19.9	-8.1	2479	3002	-8.0	-2.7	-2	4					
6TH	67.50									-1111.0	-135.7	14.1	-292.0	15.0
		-20.3	-8.5	2479	3002	-8.2	-2.8	-1	3					
7TH	80.00									-1090.7	-127.2	12.5	-278.2	14.9
		-20.7	-8.8	2479	3002	-8.4	-2.9	-1	2					
8TH	92.50									-1070.0	-118.4	10.9	-264.7	14.9
		-21.1	-9.2	2479	3002	-8.5	-3.1	-1	2					
9TH	105.00									-1048.9	-109.2	9.5	-251.5	14.8
		-21.5	-9.5	2479	3002	-8.7	-3.2	-0	1					
10TH	117.50									-1027.3	-99.7	8.2	-238.5	14.8
		-22.0	-9.9	2479	3002	-8.9	-3.3	-0	0					
11TH	130.00									-1005.4	-89.8	7.0	-225.8	14.8
		-22.4	-10.2	2479	3002	-9.0	-3.4	0	-0					
12TH	142.50									-983.0	-79.6	5.9	-213.4	14.8
		-22.7	-9.9	2479	3002	-9.1	-3.3	-0	0					
14TH	155.00									-960.3	-69.6	5.0	-201.2	14.8
		-22.9	-9.3	2479	3002	-9.2	-3.1	-1	2					
15TH	167.50									-937.4	-60.3	4.2	-189.3	14.7
		-23.1	-8.7	2479	3002	-9.3	-2.9	-1	3					
16TH	180.00									-914.3	-51.7	3.5	-177.8	14.6
		-23.4	-8.1	2479	3002	-9.4	-2.7	-2	5					
17TH	192.50									-891.0	-43.6	2.9	-166.5	14.5
		-23.6	-7.5	2479	3002	-9.5	-2.5	-2	6					
18TH	205.00									-867.4	-36.1	2.4	-155.5	14.3
		-23.8	-6.9	2479	3002	-9.6	-2.3	-2	8					
19TH	217.50									-843.6	-29.3	2.0	-144.8	14.1
		-24.0	-6.2	2479	3002	-9.7	-2.1	-2	9					
20TH	230.00									-819.5	-23.0	1.7	-134.4	13.9
		-24.6	-5.6	2479	3002	-9.9	-1.9	-2	11					
21ST	242.50									-795.0	-17.4	1.4	-124.3	13.6
		-25.4	-4.9	2479	3002	-10.2	-1.6	-2	12					
22ND	255.00									-769.6	-12.6	1.2	-114.5	13.3
		-26.2	-4.1	2479	3002	-10.6	-1.4	-2	14					
23RD	267.50									-743.4	-8.4	1.1	-105.1	12.9
		-27.0	-3.4	2479	3002	-10.9	-1.1	-2	15					
24TH	280.00									-716.4	-5.0	1.0	-96.0	12.5
		-27.8	-2.7	2479	3002	-11.2	-.9	-2	17					
25TH	292.50									-688.5	-2.3	1.0	-87.2	12.0
		-28.6	-2.0	2479	3002	-11.6	-.7	-1	18					
26TH	305.00									-659.9	-.3	1.0	-78.8	11.5
		-29.4	-1.3	2479	3002	-11.9	-.4	-1	19					
27TH	317.50									-630.5	1.0	1.0	-70.7	11.0
		-30.3	-.6	2479	3002	-12.2	-.2	-0	20					

TABLE 7. SHEAR AND MOMENT DIAGRAMS : 1999 BROADWAY TOWER
WIND DIRECTION 310 CONFIGURATION A REFERENCE PRESSURE 22.0 PSF GUST FACTOR 1.32

FLOOR	HEIGHT	FORCE (KIPS) X	FORCE (KIPS) Y	AREA (SQ FT) X	AREA (SQ FT) Y	PRESSURE (PSF) X	PRESSURE (PSF) Y	ECCEN (FT) X	ECCEN (FT) Y	SHEAR (KIPS) X	SHEAR (KIPS) Y	MOMENT (1000-FT-KIPS) X	MOMENT (1000-FT-KIPS) Y	MOMENT (1000-FT-KIPS) Z
28TH	330.00									-600.1	1.6	1.0	-63.0	10.4
		-31.3	-.2	2479	3002	-12.6	-.1	-0	20					
29TH	342.50									-568.8	1.9	1.0	-55.7	9.8
		-32.4	.2	2479	3002	-13.1	.1	0	20					
30TH	355.00									-536.4	1.7	1.0	-48.8	9.1
		-33.4	.6	2479	3002	-13.5	.2	0	20					
31ST	367.50									-503.1	1.0	1.0	-42.3	8.5
		-34.4	1.0	2479	3002	-13.9	.3	1	20					
32ND	380.00									-468.7	.0	1.0	-36.2	7.8
		-35.4	1.5	2479	3002	-14.3	.5	1	20					
33RD	392.50									-433.3	-1.5	1.0	-30.6	7.0
		-36.4	1.9	2479	3002	-14.7	.6	1	20					
34TH	405.00									-396.8	-3.3	1.0	-25.4	6.3
		-37.3	2.0	2479	3002	-15.1	.7	1	20					
35TH	417.50									-359.5	-5.3	1.0	-20.7	5.6
		-38.0	1.6	2479	3002	-15.3	.5	1	19					
36TH	430.00									-321.5	-6.9	.9	-16.4	4.8
		-38.8	1.2	2479	3002	-15.6	.4	1	18					
37TH	442.50									-282.7	-8.1	.8	-12.6	4.1
		-39.5	.7	2479	3002	-15.9	.2	0	17					
38TH	455.00									-243.2	-8.8	.7	-9.3	3.5
		-40.2	.3	2479	3002	-16.2	.1	0	16					
39TH	467.50									-203.0	-9.1	.6	-6.6	2.8
		-40.9	-.1	2479	3002	-16.5	-.0	-0	15					
40TH	480.00									-162.1	-9.1	.4	-4.3	2.2
		-41.6	-.5	2479	3002	-16.8	-.2	-0	14					
41ST	492.50									-120.5	-8.6	.3	-2.5	1.6
		-40.1	-.7	2479	3002	-16.2	-.2	-0	14					
42ND	505.00									-80.4	-7.9	.2	-1.3	1.1
		-35.8	-.7	2479	3002	-14.4	-.2	-0	14					
43RD	517.50									-44.6	-7.2	.1	-.5	.6
		-31.5	-.6	2479	3002	-12.7	-.2	-0	14					
PARA	530.00									-13.1	-6.6	.1	-.1	.1
		-13.1	-6.6	1856	1929	-7.1	-3.4	-4	9					
TOP	547.00									0.0	0.0	0.0	0.0	0.0

TABLE 7. SHEAR AND MOMENT DIAGRAMS : 1999 BROADWAY TOWER
WIND DIRECTION 320 CONFIGURATION A REFERENCE PRESSURE 22.0 PSF GUST FACTOR 1.32

FLOOR	HEIGHT	FORCE (KIPS) X	FORCE (KIPS) Y	AREA (SQ FT) X	AREA (SQ FT) Y	PRESSURE (PSF) X	PRESSURE (PSF) Y	ECCEN (FT) X	ECCEN (FT) Y	SHEAR (KIPS) X	SHEAR (KIPS) Y	MOMENT (1000-FT-KIPS) X	MOMENT (1000-FT-KIPS) Y	MOMENT (1000-FT-KIPS) Z
LBBY	0.00									-2137.6	558.7	-180.2	-638.2	62.4
		-49.1	7.2	4067	3717	-12.1	1.9	1	4					
3RD	30.00									-2088.5	551.5	-163.6	-574.8	62.2
		-21.5	2.7	1885	1928	-11.4	1.4	1	10					
4TH	42.50									-2066.9	548.8	-156.7	-548.9	62.0
		-31.1	3.4	2252	2592	-13.8	1.3	2	19					
5TH	55.00									-2035.8	545.4	-149.9	-523.2	61.4
		-37.8	5.8	2479	3002	-15.3	1.9	4	28					
6TH	67.50									-1998.0	539.6	-143.1	-498.0	60.3
		-38.9	5.9	2479	3002	-15.7	2.0	4	29					
7TH	80.00									-1959.1	533.7	-136.4	-473.3	59.1
		-39.9	6.0	2479	3002	-16.1	2.0	4	30					
8TH	92.50									-1919.2	527.8	-129.7	-449.1	57.9
		-41.0	6.1	2479	3002	-16.5	2.0	5	30					
9TH	105.00									-1878.3	521.7	-123.2	-425.3	56.6
		-42.0	6.1	2479	3002	-16.9	2.0	5	31					
10TH	117.50									-1836.3	515.6	-116.7	-402.1	55.3
		-43.1	6.2	2479	3002	-17.4	2.1	5	32					
11TH	130.00									-1793.2	509.3	-110.3	-379.4	53.9
		-44.1	6.3	2479	3002	-17.8	2.1	5	32					
12TH	142.50									-1749.1	503.0	-104.0	-357.3	52.5
		-45.0	7.3	2479	3002	-18.2	2.4	5	32					
14TH	155.00									-1704.1	495.7	-97.7	-335.7	51.0
		-45.8	8.7	2479	3002	-18.5	2.9	6	32					
15TH	167.50									-1658.3	487.0	-91.6	-314.7	49.4
		-46.6	10.0	2479	3002	-18.8	3.3	7	32					
16TH	180.00									-1611.6	477.0	-85.6	-294.2	47.9
		-47.4	11.4	2479	3002	-19.1	3.8	8	32					
17TH	192.50									-1564.2	465.6	-79.7	-274.4	46.3
		-48.3	12.7	2479	3002	-19.5	4.2	8	32					
18TH	205.00									-1515.9	452.9	-73.9	-255.1	44.6
		-49.1	14.1	2479	3002	-19.8	4.7	9	31					
19TH	217.50									-1466.8	438.8	-68.4	-236.5	43.0
		-49.9	15.4	2479	3002	-20.1	5.1	10	31					
20TH	230.00									-1417.0	423.4	-63.0	-218.5	41.3
		-50.9	16.3	2479	3002	-20.5	5.4	10	31					
21ST	242.50									-1366.1	407.1	-57.8	-201.1	39.6
		-52.0	16.7	2479	3002	-21.0	5.6	10	30					
22ND	255.00									-1314.1	390.4	-52.8	-184.3	37.8
		-53.1	17.1	2479	3002	-21.4	5.7	9	29					
23RD	267.50									-1261.0	373.2	-48.0	-168.2	36.1
		-54.2	17.5	2479	3002	-21.9	5.8	9	29					
24TH	280.00									-1206.8	355.7	-43.5	-152.8	34.4
		-55.4	17.9	2479	3002	-22.3	6.0	9	28					
25TH	292.50									-1151.4	337.8	-39.1	-138.1	32.7
		-56.5	18.3	2479	3002	-22.8	6.1	9	27					
26TH	305.00									-1094.9	319.5	-35.0	-124.0	31.0
		-57.6	18.7	2479	3002	-23.2	6.2	9	27					
27TH	317.50									-1037.3	300.8	-31.1	-110.7	29.3
		-58.6	19.0	2479	3002	-23.6	6.3	9	26					

TABLE 7. SHEAR AND MOMENT DIAGRAMS : 1999 BROADWAY TOWER
WIND DIRECTION 320 CONFIGURATION A REFERENCE PRESSURE 22.9 PSF GUST FACTOR 1.32

FLOOR	HEIGHT	FORCE (KIPS) X	FORCE (KIPS) Y	AREA (SQ FT) X	AREA (SQ FT) Y	PRESSURE (PSF) X	PRESSURE (PSF) Y	ECCEN (FT) X	ECCEN (FT) Y	SHEAR (KIPS) X	SHEAR (KIPS) Y	MOMENT (1000-FT-KIPS) X	MOMENT (1000-FT-KIPS) Y	MOMENT (1000-FT-KIPS) Z
28TH	330.00									-978.8	281.8	-27.5	-98.1	27.6
		-59.2	18.9	2479	3002	-23.9	6.3	8	26					
29TH	342.50									-919.6	263.0	-24.1	-86.2	25.9
		-59.8	18.8	2479	3002	-24.1	6.2	8	26					
30TH	355.00									-859.8	244.2	-20.9	-75.1	24.1
		-60.4	18.6	2479	3002	-24.4	6.2	8	26					
31ST	367.50									-799.4	225.6	-18.0	-64.8	22.4
		-61.0	18.5	2479	3002	-24.6	6.2	8	26					
32ND	380.00									-738.5	207.0	-15.3	-55.1	20.6
		-61.6	18.4	2479	3002	-24.8	6.1	8	26					
33RD	392.50									-676.9	188.6	-12.8	-46.3	18.9
		-62.2	18.3	2479	3002	-25.1	6.1	8	26					
34TH	405.00									-614.8	170.3	-10.6	-38.2	17.1
		-62.6	18.1	2479	3002	-25.2	6.0	8	26					
35TH	417.50									-552.2	152.1	-8.6	-30.9	15.4
		-62.6	17.8	2479	3002	-25.3	5.9	7	26					
36TH	430.00									-489.6	134.3	-6.8	-24.4	13.6
		-62.7	17.4	2479	3002	-25.3	5.8	7	26					
37TH	442.50									-426.9	116.9	-5.2	-18.7	11.9
		-62.7	17.1	2479	3002	-25.3	5.7	7	26					
38TH	455.00									-364.2	99.9	-3.8	-13.7	10.1
		-62.8	16.7	2479	3002	-25.3	5.6	7	26					
39TH	467.50									-301.3	83.2	-2.7	-9.6	8.4
		-62.9	16.3	2479	3002	-25.4	5.4	7	26					
40TH	480.00									-238.5	66.8	-1.8	-6.2	6.7
		-62.9	16.0	2479	3002	-25.4	5.3	6	25					
41ST	492.50									-175.6	50.8	-1.0	-3.6	5.0
		-59.7	15.9	2479	3002	-24.1	5.3	7	26					
42ND	505.00									-115.9	34.9	-.5	-1.8	3.3
		-52.1	16.1	2479	3002	-21.0	5.4	8	27					
43RD	517.50									-63.7	18.9	-.2	-.7	1.8
		-44.6	16.3	2479	3002	-18.0	5.4	11	29					
PARA	530.00									-19.2	2.6	-.0	-.2	.3
		-19.2	2.6	1856	1929	-10.3	1.4	2	16					
TOP	547.00									0.0	0.0	0.0	0.0	0.0

TABLE 7. SHEAR AND MOMENT DIAGRAMS : 1999 BROADWAY TOWER
WIND DIRECTION 330 CONFIGURATION A REFERENCE PRESSURE 22.0 PSF GUST FACTOR 1.32

FLOOR	HEIGHT	FORCE (KIPS) X	FORCE (KIPS) Y	AREA (SQ FT) X	AREA (SQ FT) Y	PRESSURE (PSF) X	PRESSURE (PSF) Y	ECCEN (FT) X	ECCEN (FT) Y	SHEAR (KIPS) X	SHEAR (KIPS) Y	MOMENT (1000-FT-KIPS) X	MOMENT (1000-FT-KIPS) Y	MOMENT (1000-FT-KIPS) Z
LBBY	0.00									-2422.1	617.8	-185.3	-714.5	51.6
3RD	30.00	-52.2	10.2	4067	3717	-12.8	2.7	0	2	-2369.8	607.6	-166.9	-642.7	51.5
4TH	42.50	-23.4	4.1	1885	1928	-12.4	2.2	2	9	-2346.5	603.5	-159.3	-613.2	51.2
5TH	55.00	-34.4	5.4	2252	2592	-15.3	2.1	3	19	-2312.1	598.0	-151.8	-584.1	50.6
6TH	67.50	-42.0	8.1	2479	3002	-17.0	2.7	5	27	-2270.0	589.9	-144.4	-555.4	49.4
7TH	80.00	-43.9	8.9	2479	3002	-17.7	3.0	6	27	-2226.1	580.9	-137.1	-527.3	48.1
8TH	92.50	-45.7	9.8	2479	3002	-18.4	3.2	6	28	-2180.4	571.2	-129.9	-499.8	46.8
9TH	105.00	-47.6	10.6	2479	3002	-19.2	3.5	6	28	-2132.9	560.6	-122.8	-472.8	45.4
10TH	117.50	-49.4	11.4	2479	3002	-19.9	3.8	7	28	-2083.4	549.2	-115.9	-446.5	43.9
11TH	130.00	-51.2	12.2	2479	3002	-20.7	4.1	7	29	-2032.2	537.1	-109.1	-420.8	42.4
12TH	142.50	-53.1	13.0	2479	3002	-21.4	4.3	7	29	-1979.1	524.1	-102.4	-395.7	40.7
14TH	155.00	-54.3	13.7	2479	3002	-21.9	4.6	7	28	-1924.9	510.3	-96.0	-371.3	39.1
15TH	167.50	-55.1	14.4	2479	3002	-22.2	4.8	7	27	-1869.7	495.9	-89.7	-347.6	37.5
16TH	180.00	-56.0	15.1	2479	3002	-22.6	5.0	7	26	-1813.7	480.7	-83.6	-324.6	35.9
17TH	192.50	-56.9	15.8	2479	3002	-23.0	5.3	7	26	-1756.8	464.9	-77.7	-302.2	34.3
18TH	205.00	-57.8	16.6	2479	3002	-23.3	5.5	7	25	-1699.0	448.3	-72.0	-280.6	32.8
19TH	217.50	-58.7	17.3	2479	3002	-23.7	5.7	7	24	-1640.3	431.1	-66.5	-259.8	31.3
20TH	230.00	-59.5	18.0	2479	3002	-24.0	6.0	7	23	-1580.8	413.1	-61.2	-239.6	29.8
21ST	242.50	-60.4	18.2	2479	3002	-24.4	6.1	7	22	-1520.4	394.9	-56.1	-220.3	28.3
22ND	255.00	-61.2	18.1	2479	3002	-24.7	6.0	6	22	-1459.2	376.7	-51.3	-201.6	26.9
23RD	267.50	-62.0	18.0	2479	3002	-25.0	6.0	6	21	-1397.1	358.7	-46.7	-183.8	25.5
24TH	280.00	-62.9	17.9	2479	3002	-25.4	6.0	6	20	-1334.3	340.9	-42.3	-166.7	24.1
25TH	292.50	-63.7	17.8	2479	3002	-25.7	5.9	5	20	-1270.6	323.1	-38.2	-150.4	22.7
26TH	305.00	-64.5	17.6	2479	3002	-26.0	5.9	5	19	-1206.1	305.5	-34.3	-134.9	21.4
27TH	317.50	-65.3	17.5	2479	3002	-26.4	5.8	5	18	-1140.8	288.0	-30.6	-120.3	20.2
		-66.1	17.4	2479	3002	-26.7	5.8	5	18					

TABLE 7. SHEAR AND MOMENT DIAGRAMS : 1999 BROADWAY TOWER
WIND DIRECTION 330 CONFIGURATION A REFERENCE PRESSURE 22.0 PSF GUST FACTOR 1.32

FLOOR	HEIGHT	FORCE (KIPS) X	FORCE (KIPS) Y	AREA (SQ FT) X	AREA (SQ FT) Y	PRESSURE (PSF) X	PRESSURE (PSF) Y	ECCEN (FT) X	ECCEN (FT) Y	SHEAR (KIPS) X	SHEAR (KIPS) Y	MOMENT (1000-FT-KIPS) X	MOMENT (1000-FT-KIPS) Y	MOMENT (1000-FT-KIPS) Z
28TH	330.00									-1074.7	270.6	-27.1	-106.4	18.9
		-66.6	17.4	2479	3002	-26.9	5.8	5	18					
29TH	342.50									-1008.0	253.2	-23.8	-93.4	17.7
		-67.2	17.4	2479	3002	-27.1	5.8	4	17					
30TH	355.00									-940.8	235.8	-20.7	-81.2	16.4
		-67.8	17.4	2479	3002	-27.3	5.8	4	17					
31ST	367.50									-873.0	218.4	-17.9	-69.9	15.2
		-68.3	17.4	2479	3002	-27.6	5.8	4	17					
32ND	380.00									-804.7	201.0	-15.3	-59.4	14.0
		-68.9	17.4	2479	3002	-27.8	5.8	4	17					
33RD	392.50									-735.8	183.6	-12.9	-49.8	12.8
		-69.5	17.4	2479	3002	-28.0	5.8	4	16					
34TH	405.00									-666.3	166.3	-10.7	-41.0	11.6
		-69.7	17.2	2479	3002	-28.1	5.7	4	16					
35TH	417.50									-596.6	149.1	-8.7	-33.1	10.4
		-69.3	16.9	2479	3002	-28.0	5.6	4	16					
36TH	430.00									-527.2	132.2	-7.0	-26.1	9.2
		-69.0	16.5	2479	3002	-27.8	5.5	4	16					
37TH	442.50									-458.2	115.7	-5.4	-19.9	8.0
		-68.6	16.2	2479	3002	-27.7	5.4	4	16					
38TH	455.00									-389.6	99.5	-4.1	-14.6	6.9
		-68.2	15.8	2479	3002	-27.5	5.3	4	16					
39TH	467.50									-321.4	83.7	-2.9	-10.2	5.7
		-67.9	15.5	2479	3002	-27.4	5.2	4	16					
40TH	480.00									-253.5	68.2	-2.0	-6.6	4.6
		-67.5	15.1	2479	3002	-27.2	5.0	4	16					
41ST	492.50									-186.0	53.0	-1.2	-3.9	3.5
		-63.5	15.0	2479	3002	-25.6	5.0	4	16					
42ND	505.00									-122.5	38.1	-.6	-1.9	2.4
		-54.7	15.0	2479	3002	-22.1	5.0	5	18					
43RD	517.50									-67.8	23.0	-.3	-.7	1.3
		-46.0	15.1	2479	3002	-18.5	5.0	7	21					
PARA	530.00									-21.8	7.9	-.1	-.2	.2
		-21.8	7.9	1856	1929	-11.8	4.1	4	10					
TOP	547.00									0.0	0.0	0.0	0.0	0.0

TABLE 7. SHEAR AND MOMENT DIAGRAMS : 1999 BROADWAY TOWER
WIND DIRECTION 340 CONFIGURATION A REFERENCE PRESSURE 22.0 PSF GUST FACTOR 1.32

FLOOR	HEIGHT	FORCE (KIPS) X	FORCE (KIPS) Y	AREA (SQ FT) X	AREA (SQ FT) Y	PRESSURE (PSF) X	PRESSURE (PSF) Y	ECCEN (FT) X	ECCEN (FT) Y	SHEAR (KIPS) X	SHEAR (KIPS) Y	MOMENT (1000-FT-KIPS) X	MOMENT (1000-FT-KIPS) Y	MOMENT (1000-FT-KIPS) Z
LBBY	0.00									-2439.0	350.1	-106.9	-733.7	25.5
		-39.9	-.8	4067	3717	-9.8	-.2	0	-6					
3RD	30.00									-2399.1	350.9	-96.4	-661.1	25.7
		-17.7	-1.0	1885	1928	-9.4	-.5	0	-1					
4TH	42.50									-2381.4	351.8	-92.0	-631.2	25.7
		-28.9	-.1	2252	2592	-12.8	-.1	-0	8					
5TH	55.00									-2352.5	352.0	-87.6	-601.6	25.5
		-37.0	2.0	2479	3002	-14.9	.7	1	16					
6TH	67.50									-2315.5	350.0	-83.2	-572.5	24.9
		-39.3	2.8	2479	3002	-15.9	.9	1	16					
7TH	80.00									-2276.2	347.2	-78.9	-543.8	24.3
		-41.6	3.6	2479	3002	-16.8	1.2	1	17					
8TH	92.50									-2234.6	343.5	-74.6	-515.6	23.6
		-43.9	4.5	2479	3002	-17.7	1.5	2	18					
9TH	105.00									-2190.8	339.0	-70.3	-487.9	22.8
		-46.1	5.3	2479	3002	-18.6	1.8	2	18					
10TH	117.50									-2144.6	333.7	-66.1	-460.8	21.9
		-48.4	6.1	2479	3002	-19.5	2.0	2	19					
11TH	130.00									-2096.2	327.6	-62.0	-434.3	21.0
		-50.7	7.0	2479	3002	-20.4	2.3	3	19					
12TH	142.50									-2045.6	320.6	-57.9	-408.4	20.0
		-52.5	7.9	2479	3002	-21.2	2.6	3	19					
14TH	155.00									-1993.1	312.8	-54.0	-383.2	19.0
		-54.1	8.8	2479	3002	-21.8	2.9	3	18					
15TH	167.50									-1939.0	304.0	-50.1	-358.6	18.0
		-55.7	9.7	2479	3002	-22.5	3.2	3	17					
16TH	180.00									-1883.4	294.2	-46.4	-334.7	17.0
		-57.3	10.7	2479	3002	-23.1	3.6	3	17					
17TH	192.50									-1826.1	283.5	-42.8	-311.5	16.0
		-58.9	11.6	2479	3002	-23.7	3.9	3	16					
18TH	205.00									-1767.3	271.9	-39.3	-289.1	15.1
		-60.4	12.5	2479	3002	-24.4	4.2	3	16					
19TH	217.50									-1706.8	259.4	-36.0	-267.4	14.1
		-62.0	13.5	2479	3002	-25.0	4.5	3	15					
20TH	230.00									-1644.8	245.9	-32.8	-246.4	13.1
		-63.4	13.8	2479	3002	-25.6	4.6	3	14					
21ST	242.50									-1581.4	232.1	-29.8	-226.3	12.1
		-64.5	13.6	2479	3002	-26.0	4.5	3	14					
22ND	255.00									-1516.9	218.6	-27.0	-206.9	11.2
		-65.6	13.3	2479	3002	-26.5	4.4	3	13					
23RD	267.50									-1451.3	205.3	-24.4	-188.3	10.3
		-66.7	13.0	2479	3002	-26.9	4.3	2	12					
24TH	280.00									-1384.6	192.2	-21.9	-170.6	9.5
		-67.8	12.8	2479	3002	-27.4	4.3	2	11					
25TH	292.50									-1316.8	179.4	-19.5	-153.7	8.7
		-68.9	12.5	2479	3002	-27.8	4.2	2	10					
26TH	305.00									-1247.9	166.9	-17.4	-137.7	8.0
		-70.0	12.3	2479	3002	-28.2	4.1	2	10					
27TH	317.50									-1177.9	154.7	-15.4	-122.5	7.3
		-70.8	11.9	2479	3002	-28.6	4.0	2	9					

TABLE 7. SHEAR AND MOMENT DIAGRAMS : 1999 BROADWAY TOWER
WIND DIRECTION 340 CONFIGURATION A REFERENCE PRESSURE 22.0 PSF GUST FACTOR 1.32

FLOOR	HEIGHT	FORCE (KIPS) X	FORCE (KIPS) Y	AREA (SQ FT) X	AREA (SQ FT) Y	PRESSURE (PSF) X	PRESSURE (PSF) Y	ECCEN (FT) X	ECCEN (FT) Y	SHEAR (KIPS) X	SHEAR (KIPS) Y	MOMENT (1000-FT-KIPS) X	MOMENT (1000-FT-KIPS) Y	MOMENT (1000-FT-KIPS) Z
28TH	330.00									-1107.1	142.7	-13.5	-108.3	6.6
		-71.1	11.5	2479	3002	-28.7	3.8	1	8					
29TH	342.50									-1036.0	131.2	-11.8	-94.9	6.0
		-71.3	11.1	2479	3002	-28.8	3.7	1	8					
30TH	355.00									-964.8	120.1	-10.2	-82.4	5.4
		-71.5	10.6	2479	3002	-28.8	3.5	1	7					
31ST	367.50									-893.3	109.5	-8.8	-70.7	4.9
		-71.7	10.2	2479	3002	-28.9	3.4	1	7					
32ND	380.00									-821.5	99.4	-7.5	-60.0	4.4
		-71.9	9.7	2479	3002	-29.0	3.2	1	6					
33RD	392.50									-749.6	89.6	-6.3	-50.2	3.9
		-72.2	9.3	2479	3002	-29.1	3.1	1	6					
34TH	405.00									-677.5	80.4	-5.2	-41.3	3.5
		-72.1	8.8	2479	3002	-29.1	2.9	1	5					
35TH	417.50									-605.4	71.5	-4.3	-33.3	3.1
		-71.5	8.4	2479	3002	-28.9	2.8	1	5					
36TH	430.00									-533.8	63.1	-3.5	-26.2	2.8
		-71.0	8.0	2479	3002	-28.6	2.7	1	5					
37TH	442.50									-462.9	55.1	-2.7	-19.9	2.4
		-70.4	7.6	2479	3002	-28.4	2.5	1	5					
38TH	455.00									-392.4	47.5	-2.1	-14.6	2.1
		-69.9	7.2	2479	3002	-28.2	2.4	0	5					
39TH	467.50									-322.6	40.3	-1.5	-10.1	1.7
		-69.3	6.8	2479	3002	-28.0	2.3	0	4					
40TH	480.00									-253.3	33.5	-1.1	-6.5	1.4
		-68.7	6.4	2479	3002	-27.7	2.1	0	4					
41ST	492.50									-184.5	27.2	-.7	-3.8	1.1
		-64.3	6.4	2479	3002	-25.9	2.1	0	5					
42ND	505.00									-120.2	20.8	-.4	-1.9	.8
		-54.8	7.2	2479	3002	-22.1	2.4	1	6					
43RD	517.50									-65.5	13.6	-.2	-.7	.5
		-45.2	7.9	2479	3002	-18.2	2.6	1	8					
PARA	530.00									-20.2	5.7	-.0	-.2	.1
		-20.2	5.7	1856	1929	-10.9	2.9	1	5					
TOP	547.00									0.0	0.0	0.0	0.0	0.0

TABLE 7. SHEAR AND MOMENT DIAGRAMS : 1999 BROADWAY TOWER
WIND DIRECTION 350 CONFIGURATION A REFERENCE PRESSURE 22.0 PSF GUST FACTOR 1.32

FLOOR	HEIGHT	FORCE (KIPS) X	FORCE (KIPS) Y	AREA (SQ FT) X	AREA (SQ FT) Y	PRESSURE (PSF) X	PRESSURE (PSF) Y	ECCEN (FT) X	ECCEN (FT) Y	SHEAR (KIPS) X	SHEAR (KIPS) Y	MOMENT (1000-FT-KIPS) X	MOMENT (1000-FT-KIPS) Y	MOMENT (1000-FT-KIPS) Z
LBBY	0.00									-2323.9	11.2	-7.5	-713.5	-8.7
		-35.0	-5.5	4067	3717	-8.6	-1.5	2	-11					
3RD	30.00									-2288.8	16.7	-7.0	-644.3	-8.3
		-14.7	-4.0	1885	1928	-7.8	-2.1	3	-10					
4TH	42.50									-2274.1	20.6	-6.8	-615.8	-8.2
		-25.3	-5.0	2252	2592	-11.3	-1.9	2	-8					
5TH	55.00									-2248.7	25.6	-6.5	-587.5	-8.0
		-33.3	-4.2	2479	3002	-13.5	-1.4	0	-3					
6TH	67.50									-2215.4	29.8	-6.2	-559.6	-7.9
		-35.3	-3.5	2479	3002	-14.2	-1.2	0	-2					
7TH	80.00									-2180.1	33.3	-5.8	-532.2	-7.8
		-37.2	-2.8	2479	3002	-15.0	-.9	0	-2					
8TH	92.50									-2142.9	36.1	-5.3	-505.2	-7.7
		-39.2	-2.1	2479	3002	-15.8	-.7	0	-1					
9TH	105.00									-2103.7	38.3	-4.9	-478.6	-7.7
		-41.1	-1.5	2479	3002	-16.6	-.5	0	-0					
10TH	117.50									-2062.6	39.7	-4.4	-452.6	-7.7
		-43.1	-.8	2479	3002	-17.4	-.3	-0	0					
11TH	130.00									-2019.5	40.5	-3.9	-427.1	-7.7
		-45.0	-.1	2479	3002	-18.2	-.0	-0	1					
12TH	142.50									-1974.5	40.6	-3.4	-402.1	-7.7
		-46.8	.6	2479	3002	-18.9	.2	0	0					
14TH	155.00									-1927.7	40.0	-2.9	-377.7	-7.7
		-48.6	1.3	2479	3002	-19.6	.4	-0	-0					
15TH	167.50									-1879.1	38.8	-2.4	-353.9	-7.7
		-50.3	1.9	2479	3002	-20.3	.6	-0	-1					
16TH	180.00									-1828.8	36.8	-1.9	-330.7	-7.7
		-52.1	2.6	2479	3002	-21.0	.9	-0	-1					
17TH	192.50									-1776.7	34.2	-1.5	-308.2	-7.7
		-53.8	3.3	2479	3002	-21.7	1.1	-0	-1					
18TH	205.00									-1722.9	30.9	-1.1	-286.3	-7.6
		-55.6	4.0	2479	3002	-22.4	1.3	-0	-2					
19TH	217.50									-1667.3	27.0	-.7	-265.1	-7.5
		-57.3	4.6	2479	3002	-23.1	1.5	-0	-2					
20TH	230.00									-1610.0	22.3	-.4	-244.7	-7.3
		-58.9	4.7	2479	3002	-23.7	1.6	-0	-3					
21ST	242.50									-1551.1	17.6	-.1	-224.9	-7.2
		-60.2	4.2	2479	3002	-24.3	1.4	-0	-3					
22ND	255.00									-1490.9	13.4	.0	-205.9	-7.0
		-61.5	3.7	2479	3002	-24.8	1.2	-0	-3					
23RD	267.50									-1429.4	9.7	.2	-187.6	-6.8
		-62.9	3.1	2479	3002	-25.4	1.0	-0	-3					
24TH	280.00									-1366.5	6.6	.3	-170.2	-6.6
		-64.2	2.6	2479	3002	-25.9	.9	-0	-4					
25TH	292.50									-1302.2	4.0	.4	-153.5	-6.4
		-65.6	2.1	2479	3002	-26.5	.7	-0	-4					
26TH	305.00									-1236.7	1.9	.4	-137.6	-6.1
		-66.9	1.6	2479	3002	-27.0	.5	-0	-4					
27TH	317.50									-1169.7	.4	.4	-122.6	-5.8
		-68.1	1.1	2479	3002	-27.5	.4	-0	-4					

TABLE 7. SHEAR AND MOMENT DIAGRAMS : 1999 BROADWAY TOWER
WIND DIRECTION 350 CONFIGURATION A REFERENCE PRESSURE 22.0 PSF GUST FACTOR 1.32

FLOOR	HEIGHT	FORCE (KIPS) X	FORCE (KIPS) Y	AREA (SQ FT) X	AREA (SQ FT) Y	PRESSURE (PSF) X	PRESSURE (PSF) Y	ECCEN (FT) X	ECCEN (FT) Y	SHEAR (KIPS) X	SHEAR (KIPS) Y	MOMENT (1000-FT-KIPS) X	MOMENT (1000-FT-KIPS) Y	MOMENT (1000-FT-KIPS) Z
28TH	330.00									-1101.7	-.8	.4	-108.4	-5.5
		-68.7	1.0	2479	3002	-27.7	.3	-0	-5					
29TH	342.50									-1032.9	-1.7	.4	-95.0	-5.2
		-69.4	.8	2479	3002	-28.0	.3	-0	-5					
30TH	355.00									-963.5	-2.5	.4	-82.6	-4.9
		-70.1	.7	2479	3002	-28.3	.2	-0	-5					
31ST	367.50									-893.4	-3.2	.3	-71.0	-4.5
		-70.8	.5	2479	3002	-28.6	.2	-0	-5					
32ND	380.00									-822.7	-3.7	.3	-60.2	-4.2
		-71.4	.3	2479	3002	-28.8	.1	-0	-5					
33RD	392.50									-751.2	-4.0	.2	-50.4	-3.8
		-72.1	.2	2479	3002	-29.1	.1	-0	-5					
34TH	405.00									-679.1	-4.2	.2	-41.5	-3.4
		-72.3	.0	2479	3002	-29.2	.0	-0	-5					
35TH	417.50									-606.8	-4.2	.1	-33.4	-3.0
		-71.7	-.2	2479	3002	-28.9	-.1	0	-5					
36TH	430.00									-535.1	-4.0	.1	-26.3	-2.6
		-71.0	-.3	2479	3002	-28.7	-.1	0	-5					
37TH	442.50									-464.1	-3.7	.0	-20.0	-2.3
		-70.4	-.5	2479	3002	-28.4	-.2	0	-5					
38TH	455.00									-393.6	-3.1	-.0	-14.7	-1.9
		-69.8	-.7	2479	3002	-28.1	-.2	0	-5					
39TH	467.50									-323.9	-2.4	-.0	-10.2	-1.6
		-69.1	-.9	2479	3002	-27.9	-.3	0	-5					
40TH	480.00									-254.7	-1.6	-.1	-6.6	-1.3
		-68.5	-1.0	2479	3002	-27.6	-.3	0	-5					
41ST	492.50									-186.2	-.5	-.1	-3.8	-1.0
		-64.3	-1.2	2479	3002	-25.9	-.4	0	-5					
42ND	505.00									-122.0	.7	-.1	-1.9	-.7
		-55.3	-1.3	2479	3002	-22.3	-.4	0	-6					
43RD	517.50									-66.6	1.9	-.1	-.7	-.3
		-46.4	-1.4	2479	3002	-18.7	-.5	0	-7					
PARA	530.00									-20.2	3.3	-.0	-.2	-.0
		-20.2	3.3	1856	1529	-10.9	1.7	-0	-1					
TOP	547.00									0.0	0.0	0.0	0.0	0.0

TABLE 7. SHEAR AND MOMENT DIAGRAMS : 1999 BROADWAY CHURCH, TOWER NOT IN PLACE
WIND DIRECTION 0 CONFIGURATION B REFERENCE PRESSURE 22.0 PSF GUST FACTOR 1.32

FLOOR	HEIGHT	FORCE (KIPS) X	FORCE (KIPS) Y	AREA (SQ FT) X	AREA (SQ FT) Y	PRESSURE (PSF) X	PRESSURE (PSF) Y	ECCEN (FT) X	ECCEN (FT) Y	SHEAR (KIPS) X	SHEAR (KIPS) Y	MOMENT (1000-FT-KIPS) X	MOMENT (1000-FT-KIPS) Y	MOMENT (1000-FT-KIPS) Z
0'	0.00									-13.5	5.6	-.2	-.4	.2
		-1.6	-.0	967	1257	-1.7	-.0	-0	2					
10'	10.00									-11.8	5.6	-.2	-.3	.2
		-1.2	.7	967	1257	-1.2	.5	11	21					
20'	20.00									-10.6	5.0	-.1	-.2	.1
		-2.5	1.0	967	1255	-2.5	.8	5	13					
30'	30.00									-8.2	3.9	-.1	-.1	.1
		-3.4	1.4	967	1212	-3.5	1.1	5	13					
40'	40.00									-4.8	2.6	-.0	-.0	.1
		-2.7	1.2	967	1149	-2.8	1.0	5	10					
50'	50.00									-2.1	1.4	-.0	-.0	.0
		-2.1	1.4	870	980	-2.4	1.4	5	8					
TOP	59.00									0.0	0.0	0.0	0.0	0.0

TABLE 7. SHEAR AND MOMENT DIAGRAMS : 1999 BROADWAY CHURCH, TOWER NOT IN PLACE
WIND DIRECTION 10 CONFIGURATION B REFERENCE PRESSURE 22 0 PSF GUST FACTOR 1.32

FLOOR	HEIGHT	FORCE (KIPS) X	FORCE (KIPS) Y	AREA (SQ FT) X	AREA (SQ FT) Y	PRESSURE (PSF) X	PRESSURE (PSF) Y	ECCEN (FT) X	ECCEN (FT) Y	SHEAR (KIPS) X	SHEAR (KIPS) Y	MOMENT (1000-FT-KIPS) X	MOMENT (1000-FT-KIPS) Y	MOMENT (1000-FT-KIPS) Z
0'	0.00									-16 0	6.4	-.2	-.5	.2
		-2.3	-.2	967	1257	-2.4	-.1	-0	6					
10'	10.00									-13.7	6.5	-.2	-.4	.2
		-1.6	.7	967	1257	-1.7	.6	9	21					
20'	20.00									-12.1	5.8	-.1	-.2	.2
		-2.6	1.2	967	1255	-2.7	1.0	6	13					
30'	30.00									-9.5	4.6	-.1	-.1	.1
		-3.8	1.5	967	1212	-3.9	1.2	6	14					
40'	40.00									-5.6	3.1	-.0	-.1	.1
		-3.0	1.4	967	1149	-3.2	1.2	4	9					
50'	50.00									-2.6	1.7	-.0	-.0	.1
		-2.6	1.7	870	980	-3.0	1.8	9	14					
TOP	59.00									0.0	0.0	0.0	0.0	0.0

TABLE 7. SHEAR AND MOMENT DIAGRAMS : 1999 BROADWAY CHURCH. TOWER NOT IN PLACE
WIND DIRECTION 20 CONFIGURATION B REFERENCE PRESSURE 22.0 PSF GUST FACTOR 1.32

FLOOR	HEIGHT	FORCE (KIPS) X	FORCE (KIPS) Y	AREA (SQ FT) X	AREA (SQ FT) Y	PRESSURE (PSF) X	PRESSURE (PSF) Y	ECCEN (FT) X	ECCEN (FT) Y	SHEAR (KIPS) X	SHEAR (KIPS) Y	MOMENT (1000-FT-KIPS) X	MOMENT (1000-FT-KIPS) Y	MOMENT (1000-FT-KIPS) Z
0'	0.00									-13.5	9.8	-.3	-.4	.3
		-1.9	.1	967	1257	-2.0	.1	0	6					
10'	10.00									-11.5	9.7	-.3	-.3	.2
		-1.3	1.3	967	1257	-1.3	1.1	18	18					
20'	20.00									-10.3	8.4	-.2	-.2	.2
		-2.3	2.1	967	1255	-2.4	1.7	11	12					
30'	30.00									-8.0	6.3	-.1	-.1	.1
		-3.4	2.5	967	1212	-3.5	2.0	9	12					
40'	40.00									-4.6	3.8	-.0	-.0	.1
		-2.6	1.9	967	1149	-2.7	1.7	6	8					
50'	50.00									-2.0	1.9	-.0	-.0	.1
		-2.0	1.9	870	980	-2.3	1.9	13	14					
TOP	59.00									0.0	0.0	0.0	0.0	0.0

TABLE 7. SHEAR AND MOMENT DIAGRAMS : 1999 BROADWAY CHURCH, TOWER NOT IN PLACE
WIND DIRECTION 30 CONFIGURATION 8 REFERENCE PRESSURE 22.0 PSF GUST FACTOR 1.32

FLOOR	HEIGHT	FORCE (KIPS) X	FORCE (KIPS) Y	AREA (SQ FT) X	AREA (SQ FT) Y	PRESSURE (PSF) X	PRESSURE (PSF) Y	ECCEN (FT) X	ECCEN (FT) Y	SHEAR (KIPS) X	SHEAR (KIPS) Y	MOMENT (1000-FT-KIPS) X	MOMENT (1000-FT-KIPS) Y	MOMENT (1000-FT-KIPS) Z
0'	0.00									-11.7	20.0	-.6	-.4	.3
		-2.0	1.9	967	1257	-2.0	1.5	4	4					
10'	10.00									-9.7	18.1	-.4	-.2	.2
		-1.1	3.1	967	1257	-1.1	2.4	17	6					
20'	20.00									-8.6	15.1	-.3	-.2	.2
		-2.0	4.0	967	1255	-2.1	3.2	10	5					
30'	30.00									-6.6	11.1	-.1	-.1	.1
		-3.3	4.6	967	1212	-3.4	3.8	7	5					
40'	40.00									-3.3	6.4	-.1	-.0	.1
		-2.2	3.9	967	1149	-2.3	3.4	8	5					
50'	50.00									-1.1	2.6	-.0	-.0	.0
		-1.1	2.6	870	980	-1.3	2.6	14	6					
TOP	59.00									0.0	0.0	0.0	0.0	0.0

TABLE 7. SHEAR AND MOMENT DIAGRAMS : 1999 BROADWAY CHURCH, TOWER NOT IN PLACE
WIND DIRECTION 40 CONFIGURATION B REFERENCE PRESSURE 22.0 PSF GUST FACTOR 1.32

FLOOR	HEIGHT	FORCE (KIPS) X	FORCE (KIPS) Y	AREA (SQ FT) X	AREA (SQ FT) Y	PRESSURE (PSF) X	PRESSURE (PSF) Y	ECCEN (FT) X	ECCEN (FT) Y	SHEAR (KIPS) X	SHEAR (KIPS) Y	MOMENT (1000-FT-KIPS) X	MOMENT (1000-FT-KIPS) Y	MOMENT (1000-FT-KIPS) Z
0'	0.00									-7.3	22.6	-.7	-.2	.2
		-1.2	2.5	967	1257	-1.3	2.0	0	0					
10'	10.00									-6.1	20.1	-.5	-.1	.2
		-.6	3.9	967	1257	-.6	3.1	13	2					
20'	20.00									-5.5	16.3	-.3	-.1	.2
		-1.6	4.7	967	1255	-1.7	3.7	9	3					
30'	30.00									-3.8	11.6	-.1	-.0	.1
		-2.5	5.2	967	1212	-2.5	4.3	8	4					
40'	40.00									-1.4	6.4	-.1	-.0	.1
		-1.2	4.2	967	1149	-1.2	3.7	11	3					
50'	50.00									-.2	2.1	-.0	-.0	.0
		-.2	2.1	870	980	-.2	2.2	8	1					
TOP	59.00									0.0	0.0	0.0	0.0	0.0

TABLE 7. SHEAR AND MOMENT DIAGRAMS : 1999 BROADWAY CHURCH, TOWER NOT IN PLACE
WIND DIRECTION 50 CONFIGURATION B REFERENCE PRESSURE 22.0 PSF GUST FACTOR 1.32

FLOOR	HEIGHT	FORCE (KIPS) X	FORCE (KIPS) Y	AREA (SQ FT) X	AREA (SQ FT) Y	PRESSURE (PSF) X	PRESSURE (PSF) Y	ECCEN (FT) X	ECCEN (FT) Y	SHEAR (KIPS) X	SHEAR (KIPS) Y	MOMENT (1000-FT-KIPS) X	MOMENT (1000-FT-KIPS) Y	MOMENT (1000-FT-KIPS) Z
0'	0.00									-3.2	21.5	-.6	-.1	.1
		-.9	3.0	967	1257	-1.0	2.4	-3	-1					
10'	10.00									-2.3	18.5	-.4	-.1	.1
		.1	4.2	967	1257	.1	3.4	12	-0					
20'	20.00									-2.4	14.3	-.2	-.0	.1
		-.8	4.6	967	1255	-.8	3.7	8	1					
30'	30.00									-1.6	9.7	-.1	-.0	.0
		-1.4	4.5	967	1212	-1.5	3.7	3	1					
40'	40.00									-.2	5.1	-.0	-.0	.0
		-.1	3.5	967	1149	-.1	3.1	0	0					
50'	50.00									-.0	1.6	-.0	-.0	.0
		-.0	1.6	870	980	-.1	1.7	0	0					
TOP	59.00									0.0	0.0	0.0	0.0	0.0

TABLE 7. SHEAR AND MOMENT DIAGRAMS : 1999 BROADWAY CHURCH, TOWER NOT IN PLACE
WIND DIRECTION 60 CONFIGURATION B REFERENCE PRESSURE 22.0 PSF GUST FACTOR 1.32

FLOOR	HEIGHT	FORCE (KIPS) X	FORCE (KIPS) Y	AREA (SQ FT) X	AREA (SQ FT) Y	PRESSURE (PSF) X	PRESSURE (PSF) Y	ECCEN (FT) X	ECCEN (FT) Y	SHEAR (KIPS) X	SHEAR (KIPS) Y	MOMENT (1000-FT-KIPS) X	MOMENT (1000-FT-KIPS) Y	MOMENT (1000-FT-KIPS) Z
0'	0.00									2.5	21.3	-.6	.1	.0
		-.1	3.3	967	1257	-.1	2.6	-6	-0					
10'	10.00									2.7	18.0	-.4	.1	.0
		1.2	4.3	967	1257	1.2	3.4	10	-3					
20'	20.00									1.5	13.7	-.2	.0	-.0
		.2	4.5	967	1255	.2	3.6	7	-0					
30'	30.00									1.3	9.2	-.1	.0	-.0
		.1	4.3	967	1212	.1	3.6	-0	0					
40'	40.00									1.2	4.9	-.0	.0	-.0
		.9	3.4	967	1149	1.0	3.0	-9	2					
50'	50.00									.3	1.5	-.0	.0	-.0
		.3	1.5	870	980	.3	1.5	-8	2					
TOP	59.00									0.0	0.0	0.0	0.0	0.0

TABLE 7. SHEAR AND MOMENT DIAGRAMS : 1999 BROADWAY CHURCH, TOWER NOT IN PLACE
WIND DIRECTION 70 CONFIGURATION B REFERENCE PRESSURE 22.0 PSF GUST FACTOR 1.32

FLOOR	HEIGHT	FORCE (KIPS) X	FORCE (KIPS) Y	AREA (SQ FT) X	AREA (SQ FT) Y	PRESSURE (PSF) X	PRESSURE (PSF) Y	ECCEN (FT) X	ECCEN (FT) Y	SHEAR (KIPS) X	SHEAR (KIPS) Y	MOMENT (1000-FT-KIPS) X	MOMENT (1000-FT-KIPS) Y	MOMENT (1000-FT-KIPS) Z
0'	0.00									8.1	20.6	-.6	.2	-.0
10'	10.00	.8	3.1	967	1257	.8	2.5	-7	2	7.3	17.5	-.4	.2	.0
20'	20.00	2.0	4.1	967	1257	2.0	3.3	8	-4	5.3	13.4	-.2	.1	-.0
30'	30.00	1.4	4.3	967	1255	1.5	3.4	6	-2	3.9	9.1	-.1	.1	-.1
40'	40.00	1.3	4.2	967	1212	1.3	3.4	-1	0	2.7	4.9	-.0	.0	-.1
50'	50.00	1.9	3.3	967	1149	2.0	2.9	-8	5	.7	1.6	-.0	.0	-.0
TOP	59.00	.7	1.6	870	980	.9	1.6	-8	4	0.0	0.0	0.0	0.0	0.0

TABLE 7. SHEAR AND MOMENT DIAGRAMS : 1999 BROADWAY CHURCH, TOWER NOT IN PLACE
WIND DIRECTION 80 CONFIGURATION B REFERENCE PRESSURE 22.0 PSF GUST FACTOR 1.32

FLOOR	HEIGHT	FORCE (KIPS) X	FORCE (KIPS) Y	AREA (SQ FT) X	AREA (SQ FT) Y	PRESSURE (PSF) X	PRESSURE (PSF) Y	ECCEN (FT) X	ECCEN (FT) Y	SHEAR (KIPS) X	SHEAR (KIPS) Y	MOMENT (1000-FT-KIPS) X	MOMENT (1000-FT-KIPS) Y	MOMENT (1000-FT-KIPS) Z
0'	0.00									12.5	18.1	-.5	.4	-.0
		1.5	2.7	967	1257	1.5	2.2	-6	4					
10'	10.00									11.0	15.4	-.3	.2	.0
		2.7	3.6	967	1257	2.7	2.8	5	-4					
20'	20.00									8.3	11.9	-.2	.1	-.0
		2.4	3.9	967	1255	2.4	3.1	5	-3					
30'	30.00									6.0	8.0	-.1	.1	-.0
		2.5	3.7	967	1212	2.5	3.1	-0	0					
40'	40.00									3.5	4.3	-.0	.0	-.0
		2.5	2.7	967	1149	2.6	2.3	-7	7					
50'	50.00									1.0	1.6	-.0	.0	-.0
		1.0	1.6	870	980	1.2	1.7	-1	1					
TOP	59.00									0.0	0.0	0.0	0.0	0.0

TABLE 7. SHEAR AND MOMENT DIAGRAMS : 1999 BROADWAY CHURCH, TOWER NOT IN PLACE
WIND DIRECTION 90 CONFIGURATION B REFERENCE PRESSURE 22.0 PSF GUST FACTOR 1.32

FLOOR	HEIGHT	FORCE (KIPS) X	FORCE (KIPS) Y	AREA (SQ FT) X	AREA (SQ FT) Y	PRESSURE (PSF) X	PRESSURE (PSF) Y	ECCEN (FT) X	ECCEN (FT) Y	SHEAR (KIPS) X	SHEAR (KIPS) Y	MOMENT (1000-FT-KIPS) X	MOMENT (1000-FT-KIPS) Y	MOMENT (1000-FT-KIPS) Z
0'	0.00									16.5	15.0	-.4	.5	.0
		2.3	2.4	967	1257	2.4	1.9	-6	5					
10'	10.00									14.1	12.6	-.3	.3	.0
		3.8	3.0	967	1257	3.9	2.4	4	-5					
20'	20.00									10.4	9.6	-.2	.2	.0
		3.2	2.9	967	1255	3.3	2.3	4	-5					
30'	30.00									7.2	6.7	-.1	.1	-.0
		3.2	2.8	967	1212	3.3	2.3	2	-2					
40'	40.00									3.9	3.9	-.0	.0	-.0
		2.7	2.4	967	1149	2.8	2.1	-6	7					
50'	50.00									1.3	1.5	-.0	.0	.0
		1.3	1.5	870	980	1.5	1.5	1	-1					
TOP	59.00									0.0	0.0	0.0	0.0	0.0

TABLE 7. SHEAR AND MOMENT DIAGRAMS : 1999 BROADWAY CHURCH, TOWER NOT IN PLACE
WIND DIRECTION 100 CONFIGURATION B REFERENCE PRESSURE 22.0 PSF GUST FACTOR 1.32

FLOOR	HEIGHT	FORCE (KIPS) X	FORCE (KIPS) Y	AREA (SQ FT) X	AREA (SQ FT) Y	PRESSURE (PSF) X	PRESSURE (PSF) Y	ECCEN (FT) X	ECCEN (FT) Y	SHEAR (KIPS) X	SHEAR (KIPS) Y	MOMENT (1000-FT-KIPS) X	MOMENT (1000-FT-KIPS) Y	MOMENT (1000-FT-KIPS) Z
0'	0.00									18.1	10.4	-.3	.5	.0
		2.5	2.0	967	1257	2.6	1.6	-5	6					
10'	10.00									15.6	8.4	-.2	.3	.1
		3.9	2.1	967	1257	4.0	1.7	2	-4					
20'	20.00									11.7	6.3	-.1	.2	.0
		3.9	1.9	967	1255	4.0	1.5	2	-4					
30'	30.00									7.8	4.5	-.1	.1	.0
		3.9	1.8	967	1212	4.0	1.5	2	-4					
40'	40.00									3.9	2.7	-.0	.0	.0
		2.5	1.4	967	1149	2.5	1.2	-1	2					
50'	50.00									1.5	1.3	-.0	.0	.0
		1.5	1.3	870	980	1.7	1.3	3	-4					
TOP	59.00									0.0	0.0	0.0	0.0	0.0

TABLE 7. SHEAR AND MOMENT DIAGRAMS : 1999 BROADWAY CHURCH, TOWER NOT IN PLACE
WIND DIRECTION 110 CONFIGURATION B REFERENCE PRESSURE 22.0 PSF GUST FACTOR 1.32

FLOOR	HEIGHT	FORCE (KIPS) X	FORCE (KIPS) Y	AREA (SQ FT) X	AREA (SQ FT) Y	PRESSURE (PSF) X	PRESSURE (PSF) Y	ECCEN (FT) X	ECCEN (FT) Y	SHEAR (KIPS) X	SHEAR (KIPS) Y	MOMENT (1000-FT-KIPS) X	MOMENT (1000-FT-KIPS) Y	MOMENT (1000-FT-KIPS) Z
0'	0.00									17.7	5.5	-.1	.5	.1
		2.5	1.2	967	1257	2.6	1.0	-2	4					
10'	10.00									15.2	4.3	-.1	.3	.1
		3.8	1.2	967	1257	3.9	1.0	1	-4					
20'	20.00									11.4	3.0	-.1	.2	.0
		3.8	1.0	967	1255	3.9	.8	0	-2					
30'	30.00									7.6	2.0	-.0	.1	.0
		3.8	.8	967	1212	3.9	.7	1	-3					
40'	40.00									3.8	1.2	-.0	.0	.0
		2.3	.4	967	1149	2.4	.3	1	-5					
50'	50.00									1.5	.8	-.0	.0	.0
		1.5	.8	870	980	1.8	.8	5	-9					
TOP	59.00									0.0	0.0	0.0	0.0	0.0

TABLE 7. SHEAR AND MOMENT DIAGRAMS : 1999 BROADWAY CHURCH, TOWER NOT IN PLACE
WIND DIRECTION 120 CONFIGURATION B REFERENCE PRESSURE 22.0 PSF GUST FACTOR 1.32

FLOOR	HEIGHT	FORCE (KIPS) X	FORCE (KIPS) Y	AREA (SQ FT) X	AREA (SQ FT) Y	PRESSURE (PSF) X	PRESSURE (PSF) Y	ECCEN (FT) X	ECCEN (FT) Y	SHEAR (KIPS) X	SHEAR (KIPS) Y	MOMENT (1000-FT-KIPS) X	MOMENT (1000-FT-KIPS) Y	MOMENT (1000-FT-KIPS) Z
0'	0.00									16.8	1.4	-.0	.5	.0
		2.4	.7	967	1257	2.5	.5	-1	3					
10'	10.00									14.4	.7	-.0	.3	.1
		3.7	.4	967	1257	3.8	.3	0	-4					
20'	20.00									10.7	.3	-.0	.2	.0
		3.5	.2	967	1255	3.7	.2	0	-2					
30'	30.00									7.1	.0	-.0	.1	.0
		3.8	.0	967	1212	3.9	.0	0	-4					
40'	40.00									3.4	-.0	-.0	.0	.0
		1.9	-.2	967	1149	1.9	-.2	-1	-6					
50'	50.00									1.5	.2	-.0	.0	.0
		1.5	.2	870	980	1.7	.2	1	-5					
TOP	59.00									0.0	0.0	0.0	0.0	0.0

TABLE 7. SHEAR AND MOMENT DIAGRAMS : 1999 BROADWAY CHURCH, TOWER NOT IN PLACE
WIND DIRECTION 130 CONFIGURATION B REFERENCE PRESSURE 22.0 PSF GUST FACTOR 1.32

FLOOR	HEIGHT	FORCE (KIPS) X	FORCE (KIPS) Y	AREA (SQ FT) X	AREA (SQ FT) Y	PRESSURE (PSF) X	PRESSURE (PSF) Y	ECCEN (FT) X	ECCEN (FT) Y	SHEAR (KIPS) X	SHEAR (KIPS) Y	MOMENT (1000-FT-KIPS) X	MOMENT (1000-FT-KIPS) Y	MOMENT (1000-FT-KIPS) Z
0'	0.00									9.3	-6.8	.2	.2	.0
		1.5	-.7	967	1257	1.6	-.6	-3	-6					
10'	10.00									7.8	-6.1	.1	.2	-.0
		2.0	-1.2	967	1257	2.1	-1.0	-2	-3					
20'	20.00									5.8	-4.8	.1	.1	-.0
		2.1	-1.4	967	1255	2.1	-1.1	3	4					
30'	30.00									3.7	-3.4	.0	.0	.0
		2.1	-1.6	967	1212	2.1	-1.3	2	2					
40'	40.00									1.7	-1.8	.0	.0	.0
		.7	-1.2	967	1149	.7	-1.1	-8	-5					
50'	50.00									1.0	-.6	.0	.0	-.0
		1.0	-.6	870	980	1.1	-.6	1	2					
TOP	59.00									0.0	0.0	0.0	0.0	0.0

TABLE 7. SHEAR AND MOMENT DIAGRAMS : 1999 BROADWAY CHURCH, TOWER NOT IN PLACE
WIND DIRECTION 140 CONFIGURATION B REFERENCE PRESSURE 22.0 PSF GUST FACTOR 1.32

FLOOR	HEIGHT	FORCE (KIPS) X	FORCE (KIPS) Y	AREA (SQ FT) X	AREA (SQ FT) Y	PRESSURE (PSF) X	PRESSURE (PSF) Y	ECCEN (FT) X	ECCEN (FT) Y	SHEAR (KIPS) X	SHEAR (KIPS) Y	MOMENT (1000-FT-KIPS) X	MOMENT (1000-FT-KIPS) Y	MOMENT (1000-FT-KIPS) Z
0'	0.00									5.3	-11.9	.3	.1	.0
		.9	-2.1	967	1257	1.0	-1.7	-10	-5					
10'	10.00									4.3	-9.7	.2	.1	.0
		1.3	-2.4	967	1257	1.4	-1.9	-5	-3					
20'	20.00									3.0	-7.4	.1	.0	-.0
		1.4	-2.3	967	1255	1.4	-1.8	3	2					
30'	30.00									1.6	-5.1	.1	.0	.0
		1.0	-2.4	967	1212	1.0	-2.0	4	1					
40'	40.00									.6	-2.7	.0	.0	.0
		-.0	-1.8	967	1149	-.0	-1.6	-4	0					
50'	50.00									.7	-.8	.0	.0	.0
		.7	-.8	870	980	.8	-.9	-2	-2					
TOP	59.00									0.0	0.0	0.0	0.0	0.0

TABLE 7. SHEAR AND MOMENT DIAGRAMS : 1999 BROADWAY CHURCH, TOWER NOT IN PLACE
WIND DIRECTION 150 CONFIGURATION B REFERENCE PRESSURE 22.0 PSF GUST FACTOR 1.32

FLOOR	HEIGHT	FORCE (KIPS) X	FORCE (KIPS) Y	AREA (SQ FT) X	AREA (SQ FT) Y	PRESSURE (PSF) X	PRESSURE (PSF) Y	ECCEN (FT) X	ECCEN (FT) Y	SHEAR (KIPS) X	SHEAR (KIPS) Y	MOMENT (1000-FT-KIPS) X	MOMENT (1000-FT-KIPS) Y	MOMENT (1000-FT-KIPS) Z
0'	0.00									7.9	-17.4	.5	.2	-.1
		1.5	-3.0	967	1257	1.6	-2.4	-3	-2					
10'	10.00									6.4	-14.3	.3	.1	-.1
		1.9	-3.5	967	1257	2.0	-2.8	-0	-0					
20'	20.00									4.4	-10.8	.2	.1	-.1
		1.8	-3.5	967	1255	1.9	-2.8	6	3					
30'	30.00									2.6	-7.3	.1	.0	-.0
		1.7	-3.6	967	1212	1.8	-3.0	8	4					
40'	40.00									.9	-3.7	.0	.0	-.0
		-.1	-2.5	967	1149	-.1	-2.2	-2	0					
50'	50.00									1.0	-1.1	.0	.0	-.0
		1.0	-1.1	870	980	1.2	-1.2	4	4					
TOP	59.00									0.0	0.0	0.0	0.0	0.0

TABLE 7. SHEAR AND MOMENT DIAGRAMS : 1999 BROADWAY CHURCH, TOWER NOT IN PLACE
WIND DIRECTION 160 CONFIGURATION B REFERENCE PRESSURE 22.0 PSF GUST FACTOR 1.32

FLOOR	HEIGHT	FORCE (KIPS) X	FORCE (KIPS) Y	AREA (SQ FT) X	AREA (SQ FT) Y	PRESSURE (PSF) X	PRESSURE (PSF) Y	ECCEN (FT) X	ECCEN (FT) Y	SHEAR (KIPS) X	SHEAR (KIPS) Y	MOMENT (1000-FT-KIPS) X	MOMENT (1000-FT-KIPS) Y	MOMENT (1000-FT-KIPS) Z
0'	0.00									12.6	-17.4	.5	.3	-.1
		2.2	-2.6	967	1257	2.3	-2.1	-3	-3					
10'	10.00									10.4	-14.8	.3	.2	-.1
		2.6	-3.2	967	1257	2.7	-2.6	1	1					
20'	20.00									7.8	-11.6	.2	.1	-.1
		2.6	-3.5	967	1255	2.7	-2.8	5	4					
30'	30.00									5.2	-8.1	.1	.1	-.1
		2.8	-3.7	967	1212	2.9	-3.0	5	4					
40'	40.00									2.4	-4.5	.0	.0	-.0
		.5	-2.7	967	1149	.5	-2.4	1	0					
50'	50.00									1.9	-1.8	.0	.0	-.0
		1.9	-1.8	870	980	2.1	-1.8	8	8					
TOP	59.00									0.0	0.0	0.0	0.0	0.0

TABLE 7. SHEAR AND MOMENT DIAGRAMS : 1999 BROADWAY CHURCH, TOWER NOT IN PLACE
WIND DIRECTION 170 CONFIGURATION B REFERENCE PRESSURE 22.0 PSF GUST FACTOR 1.32

FLOOR	HEIGHT	FORCE (KIPS) X	FORCE (KIPS) Y	AREA (SQ FT) X	AREA (SQ FT) Y	PRESSURE (PSF) X	PRESSURE (PSF) Y	ECCEN (FT) X	ECCEN (FT) Y	SHEAR (KIPS) X	SHEAR (KIPS) Y	MOMENT (1000-FT-KIPS) X	MOMENT (1000-FT-KIPS) Y	MOMENT (1000-FT-KIPS) Z
0'	0.00									8.2	-7.4	.2	.2	.1
		1.4	-1.1	967	1257	1.5	-.8	-8	-10					
10'	10.00									6.8	-6.3	.1	.1	.0
		2.0	-1.4	967	1257	2.1	-1.1	-4	-6					
20'	20.00									4.8	-5.0	.1	.1	.0
		1.8	-1.5	967	1255	1.9	-1.2	-1	-1					
30'	30.00									3.0	-3.5	.0	.0	.0
		1.7	-1.4	967	1212	1.7	-1.2	-1	-1					
40'	40.00									1.3	-2.0	.0	.0	.0
		.3	-1.2	967	1149	.4	-1.0	-8	-2					
50'	50.00									1.0	-.8	.0	.0	-.0
		1.0	-.8	870	980	1.1	-.8	0	1					
TOP	59.00									0.0	0.0	0.0	0.0	0.0

TABLE 7. SHEAR AND MOMENT DIAGRAMS : 1999 BROADWAY CHURCH, TOWER NOT IN PLACE
WIND DIRECTION 180 CONFIGURATION B REFERENCE PRESSURE 22.0 PSF GUST FACTOR 1.32

FLOOR	HEIGHT	FORCE (KIPS) X	FORCE (KIPS) Y	AREA (SQ FT) X	AREA (SQ FT) Y	PRESSURE (PSF) X	PRESSURE (PSF) Y	ECCEN (FT) X	ECCEN (FT) Y	SHEAR (KIPS) X	SHEAR (KIPS) Y	MOMENT (1000-FT-KIPS) X	MOMENT (1000-FT-KIPS) Y	MOMENT (1000-FT-KIPS) Z
0'	0.00									1.2	-2.7	.1	.0	.1
		.3	-.6	967	1257	.3	-.4	-26	-15					
10'	10.00									.9	-2.2	.0	.0	.0
		.5	-.5	967	1257	.5	-.4	-16	-17					
20'	20.00									.4	-1.7	.0	.0	.0
		.3	-.6	967	1255	.3	-.5	-5	-3					
30'	30.00									.0	-1.1	.0	.0	.0
		.1	-.6	967	1212	.1	-.5	-15	-2					
40'	40.00									-.0	-.5	.0	.0	.0
		-.2	-.3	967	1149	-.3	-.2	-25	24					
50'	50.00									.2	-.3	.0	.0	.0
		.2	-.3	870	980	.2	-.3	-16	-12					
TOP	59.00									0.0	0.0	0.0	0.0	0.0

TABLE 7. SHEAR AND MOMENT DIAGRAMS : 1999 BROADWAY CHURCH, TOWER NOT IN PLACE
WIND DIRECTION 190 CONFIGURATION B REFERENCE PRESSURE 22.0 PSF GUST FACTOR 1.32

FLOOR	HEIGHT	FORCE (KIPS) X	FORCE (KIPS) Y	AREA (SQ FT) X	AREA (SQ FT) Y	PRESSURE (PSF) X	PRESSURE (PSF) Y	ECCEN (FT) X	ECCEN (FT) Y	SHEAR (KIPS) X	SHEAR (KIPS) Y	MOMENT (1000-FT-KIPS) X	MOMENT (1000-FT-KIPS) Y	MOMENT (1000-FT-KIPS) Z
0'	0.00									1.5	-5.8	.2	.0	-.0
		.3	-.9	967	1257	.3	-.7	6	2					
10'	10.00									1.2	-4.9	.1	.0	-.0
		.4	-.9	967	1257	.4	-.7	3	1					
20'	20.00									.8	-4.0	.1	.0	-.0
		.4	-1.1	967	1255	.5	-.9	11	4					
30'	30.00									.4	-2.9	.0	.0	.0
		.3	-1.4	967	1212	.3	-1.2	4	1					
40'	40.00									.1	-1.5	.0	.0	.0
		-.2	-1.0	967	1149	-.2	-.9	-7	1					
50'	50.00									.3	-.5	.0	.0	.0
		.3	-.5	870	980	.4	-.6	-0	-0					
TOP	59.00									0.0	0.0	0.0	0.0	0.0

TABLE 7. SHEAR AND MOMENT DIAGRAMS : 1999 BROADWAY CHURCH, TOWER NOT IN PLACE
WIND DIRECTION 200 CONFIGURATION B REFERENCE PRESSURE 22.0 PSF GUST FACTOR 1.32

FLOOR	HEIGHT	FORCE (KIPS) X	FORCE (KIPS) Y	AREA (SQ FT) X	AREA (SQ FT) Y	PRESSURE (PSF) X	PRESSURE (PSF) Y	ECCEN (FT) X	ECCEN (FT) Y	SHEAR (KIPS) X	SHEAR (KIPS) Y	MOMENT (1000-FT-KIPS) X	MOMENT (1000-FT-KIPS) Y	MOMENT (1000-FT-KIPS) Z
0'	0.00									2.8	-8.7	.3	.1	-.0
		.5	-1.4	967	1257	.5	-1.1	2	1					
10'	10.00									2.4	-7.3	.2	.0	-.0
		.7	-1.3	967	1257	.7	-1.0	0	0					
20'	20.00									1.6	-6.0	.1	.0	-.0
		.7	-1.7	967	1255	.7	-1.3	9	4					
30'	30.00									.9	-4.3	.1	.0	-.0
		.5	-1.9	967	1212	.5	-1.6	6	2					
40'	40.00									.4	-2.4	.0	.0	.0
		-.1	-1.5	967	1149	-.1	-1.3	-7	1					
50'	50.00									.6	-.9	.0	.0	-.0
		.6	-.9	870	980	.7	-.9	1	1					
TOP	59.00									0.0	0.0	0.0	0.0	0.0

TABLE 7. SHEAR AND MOMENT DIAGRAMS : 1999 BROADWAY CHURCH, TOWER NOT IN PLACE
WIND DIRECTION 210 CONFIGURATION B REFERENCE PRESSURE 22.0 PSF GUST FACTOR 1.32

FLOOR	HEIGHT	FORCE (KIPS) X	FORCE (KIPS) Y	AREA (SQ FT) X	AREA (SQ FT) Y	PRESSURE (PSF) X	PRESSURE (PSF) Y	ECCEN (FT) X	ECCEN (FT) Y	SHEAR (KIPS) X	SHEAR (KIPS) Y	MOMENT (1000-FT-KIPS) X	MOMENT (1000-FT-KIPS) Y	MOMENT (1000-FT-KIPS) Z
0'	0.00									2.8	-5.9	.2	.1	-.0
		.5	-.8	967	1257	.5	-.7	-7	-4					
10'	10.00									2.3	-5.1	.1	.0	-.0
		.6	-.9	967	1257	.6	-.7	-4	-3					
20'	20.00									1.7	-4.2	.1	.0	-.0
		.7	-1.2	967	1255	.7	-1.0	7	4					
30'	30.00									1.0	-3.0	.0	.0	-.0
		.6	-1.4	967	1212	.6	-1.2	6	2					
40'	40.00									.4	-1.6	.0	.0	.0
		-.1	-1.0	967	1149	-.1	-.9	-8	1					
50'	50.00									.5	-.5	.0	.0	-.0
		.5	-.5	870	980	.6	-.5	3	3					
TOP	59.00									0.0	0.0	0.0	0.0	0.0

TABLE 7. SHEAR AND MOMENT DIAGRAMS : 1999 BROADWAY CHURCH, TOWER NOT IN PLACE
WIND DIRECTION 220 CONFIGURATION B REFERENCE PRESSURE 22.0 PSF GUST FACTOR 1.32

FLOOR	HEIGHT	FORCE (KIPS) X	FORCE (KIPS) Y	AREA (SQ FT) X	AREA (SQ FT) Y	PRESSURE (PSF) X	PRESSURE (PSF) Y	ECCEN (FT) X	ECCEN (FT) Y	SHEAR (KIPS) X	SHEAR (KIPS) Y	MOMENT (1000-FT-KIPS) X	MOMENT (1000-FT-KIPS) Y	MOMENT (1000-FT-KIPS) Z
0'	0.00									1.6	-2.7	.1	.0	.0
		.4	-.3	967	1257	.4	-.2	-4	-5					
10'	10.00									1.2	-2.5	.1	.0	.0
		.5	-.3	967	1257	.5	-.2	-5	-9					
20'	20.00									.7	-2.2	.0	.0	.0
		.4	-.6	967	1255	.4	-.5	4	3					
30'	30.00									.3	-1.6	.0	.0	.0
		.1	-.9	967	1212	.1	-.7	-9	-1					
40'	40.00									.2	-.7	.0	.0	.0
		-.2	-.5	967	1149	-.2	-.4	-17	8					
50'	50.00									.4	-.3	.0	.0	.0
		.4	-.3	870	980	.5	-.3	-4	-7					
TOP	59.00									0.0	0.0	0.0	0.0	0.0

TABLE 7. SHEAR AND MOMENT DIAGRAMS : 1999 BROADWAY CHURCH, TOWER NOT IN PLACE
WIND DIRECTION 230 CONFIGURATION B REFERENCE PRESSURE 22.0 PSF GUST FACTOR 1.32

FLOOR	HEIGHT	FORCE (KIPS) X	FORCE (KIPS) Y	AREA (SQ FT) X	AREA (SQ FT) Y	PRESSURE (PSF) X	PRESSURE (PSF) Y	ECCEN (FT) X	ECCEN (FT) Y	SHEAR (KIPS) X	SHEAR (KIPS) Y	MOMENT (1000-FT-KIPS) X	MOMENT (1000-FT-KIPS) Y	MOMENT (1000-FT-KIPS) Z
0'	0.00									1.6	-4.8	.1	.0	-.0
		.1	-.9	967	1257	.1	-.7	3	1					
10'	10.00									1.4	-3.9	.1	.0	-.0
		.6	-.6	967	1257	.6	-.5	1	1					
20'	20.00									.8	-3.3	.1	.0	-.0
		.6	-.9	967	1255	.6	-.7	7	5					
30'	30.00									.3	-2.5	.0	.0	-.0
		.1	-1.1	967	1212	.1	-.9	7	1					
40'	40.00									.1	-1.4	.0	.0	.0
		-.2	-.9	967	1149	-.2	-.8	-3	0					
50'	50.00									.3	-.5	.0	.0	-.0
		.3	-.5	870	980	.4	-.5	3	2					
TOP	59.00									0.0	0.0	0.0	0.0	0.0

TABLE 7. SHEAR AND MOMENT DIAGRAMS : 1999 BROADWAY CHURCH, TOWER NOT IN PLACE
WIND DIRECTION 240 CONFIGURATION B REFERENCE PRESSURE 22.0 PSF GUST FACTOR 1.32

FLOOR	HEIGHT	FORCE (KIPS) X	FORCE (KIPS) Y	AREA (SQ FT) X	AREA (SQ FT) Y	PRESSURE (PSF) X	PRESSURE (PSF) Y	ECCEN (FT) X	ECCEN (FT) Y	SHEAR (KIPS) X	SHEAR (KIPS) Y	MOMENT (1000-FT-KIPS) X	MOMENT (1000-FT-KIPS) Y	MOMENT (1000-FT-KIPS) Z
0'	0.00									.0	-7.0	.2	-.0	-.0
		.0	-1.3	967	1257	.0	-1.0	5	0					
10'	10.00									-.0	-5.7	.1	-.0	-.0
		.3	-.8	967	1257	.3	-.7	6	2					
20'	20.00									-.4	-4.9	.1	-.0	-.0
		.2	-1.3	967	1255	.2	-1.0	11	2					
30'	30.00									-.6	-3.6	.0	-.0	.0
		-.1	-1.6	967	1212	-.1	-1.3	4	-0					
40'	40.00									-.5	-1.9	.0	-.0	.0
		-.4	-1.3	967	1149	-.4	-1.1	-4	1					
50'	50.00									-.1	-.7	.0	-.0	.0
		-.1	-.7	870	980	-.1	-.7	-10	2					
TOP	59.00									0.0	0.0	0.0	0.0	0.0

TABLE 7. SHEAR AND MOMENT DIAGRAMS : 1999 BROADWAY CHURCH, TOWER NOT IN PLACE
WIND DIRECTION 250 CONFIGURATION 8 REFERENCE PRESSURE 22.0 PSF GUST FACTOR 1.32

FLOOR	HEIGHT	FORCE (KIPS) X	FORCE (KIPS) Y	AREA (SQ FT) X	AREA (SQ FT) Y	PRESSURE (PSF) X	PRESSURE (PSF) Y	ECCEN (FT) X	ECCEN (FT) Y	SHEAR (KIPS) X	SHEAR (KIPS) Y	MOMENT (1000-FT-KIPS) X	MOMENT (1000-FT-KIPS) Y	MOMENT (1000-FT-KIPS) Z
0'	0.00									-3.0	-6.7	.2	-.1	.0
		-.6	-1.2	967	1257	-.6	-.9	-2	1					
10'	10.00									-2.4	-5.5	.1	-.1	.0
		-.2	-.8	967	1257	-.2	-.7	-10	3					
20'	20.00									-2.2	-4.7	.1	-.0	.0
		-.3	-1.2	967	1255	-.3	-.9	-1	0					
30'	30.00									-1.9	-3.5	.0	-.0	.0
		-.7	-1.5	967	1212	-.7	-1.2	-2	1					
40'	40.00									-1.2	-2.1	.0	-.0	.0
		-.8	-1.3	967	1149	-.8	-1.1	-5	3					
50'	50.00									-.4	-.8	.0	-.0	.0
		-.4	-.8	870	980	-.5	-.8	-10	5					
TOP	59.00									0.0	0.0	0.0	0.0	0.0

TABLE 7. SHEAR AND MOMENT DIAGRAMS : 1999 BROADWAY CHURCH, TOWER NOT IN PLACE
WIND DIRECTION 260 CONFIGURATION 8 REFERENCE PRESSURE 22.0 PSF GUST FACTOR 1.32

FLOOR	HEIGHT	FORCE (KIPS) X	FORCE (KIPS) Y	AREA (SQ FT) X	AREA (SQ FT) Y	PRESSURE (PSF) X	PRESSURE (PSF) Y	ECCEN (FT) X	ECCEN (FT) Y	SHEAR (KIPS) X	SHEAR (KIPS) Y	MOMENT (1000-FT-KIPS) X	MOMENT (1000-FT-KIPS) Y	MOMENT (1000-FT-KIPS) Z
0'	0.00									-12.3	-4.2	.2	-.4	.2
		-2.1	-.4	967	1257	-2.2	-.3	-2	11					
10'	10.00									-10.2	-3.8	.1	-.2	.1
		-2.0	-.2	967	1257	-2.1	-.2	-2	18					
20'	20.00									-8.2	-3.6	.1	-.1	.1
		-2.3	-.6	967	1255	-2.4	-.4	-5	19					
30'	30.00									-5.9	-3.1	.0	-.1	.1
		-2.3	-1.0	967	1212	-2.4	-.8	-8	17					
40'	40.00									-3.6	-2.1	.0	-.0	.0
		-2.1	-.9	967	1149	-2.2	-.8	-2	5					
50'	50.00									-1.5	-1.2	.0	-.0	.0
		-1.5	-1.2	870	980	-1.7	-1.2	-1	2					
TOP	59.00									0.0	0.0	0.0	0.0	0.0

TABLE 7. SHEAR AND MOMENT DIAGRAMS : 1993 BROADWAY CHURCH, TOWER NOT IN PLACE
WIND DIRECTION 270 CONFIGURATION B REFERENCE PRESSURE 22.0 PSF GUST FACTOR 1.32

FLOOR	HEIGHT	FORCE (KIPS) X	FORCE (KIPS) Y	AREA (SQ FT) X	AREA (SQ FT) Y	PRESSURE (PSF) X	PRESSURE (PSF) Y	ECCEN (FT) X	ECCEN (FT) Y	SHEAR (KIPS) X	SHEAR (KIPS) Y	MOMENT (1000-FT-KIPS) X	MOMENT (1000-FT-KIPS) Y	MOMENT (1000-FT-KIPS) Z
0'	0.00									-12.7	-3.5	.2	-.4	.1
		-2.2	1.6	967	1257	-2.3	1.3	5	7					
10'	10.00									-10.5	-5.1	.1	-.2	.1
		-2.2	-.2	967	1257	-2.3	-.2	-2	17					
20'	20.00									-8.3	-4.9	.1	-.1	.1
		-2.4	-1.4	967	1255	-2.5	-1.1	-8	14					
30'	30.00									-5.9	-3.5	.1	-.1	.0
		-2.5	-1.4	967	1212	-2.5	-1.2	-7	12					
40'	40.00									-3.5	-2.1	.0	-.0	.0
		-2.0	-1.0	967	1149	-2.0	-.9	1	-1					
50'	50.00									-1.5	-1.2	.0	-.0	.0
		-1.5	-1.2	870	986	-1.7	-1.2	-2	2					
TOP	59.00									0.0	0.0	0.0	0.0	0.0

TABLE 7. SHEAR AND MOMENT DIAGRAMS ; 1999 BROADWAY CHURCH, TOWER NOT IN PLACE
WIND DIRECTION 280 CONFIGURATION 8 REFERENCE PRESSURE 22.0 PSF GUST FACTOR 1.32

FLOOR	HEIGHT	FORCE (KIPS) X	FORCE (KIPS) Y	AREA (SQ FT) X	AREA (SQ FT) Y	PRESSURE (PSF) X	PRESSURE (PSF) Y	ECCEN (FT) X	ECCEN (FT) Y	SHEAR (KIPS) X	SHEAR (KIPS) Y	MOMENT (1000-FT-KIPS) X	MOMENT (1000-FT-KIPS) Y	MOMENT (1000-FT-KIPS) Z
0'	0.00									-9.8	-7.7	.2	-.3	.1
		-1.5	-1.3	967	1257	-1.6	-1.1	-4	4					
10'	10.00									-8.3	-6.3	.2	-.2	.1
		-1.4	-.9	967	1257	-1.5	-.7	-5	8					
20'	20.00									-6.9	-5.4	.1	-.1	.1
		-1.6	-1.2	967	1255	-1.6	-1.0	-4	5					
30'	30.00									-5.3	-4.2	.1	-.1	.1
		-1.8	-1.7	967	1212	-1.8	-1.4	-6	6					
40'	40.00									-3.5	-2.5	.0	-.0	.0
		-1.9	-1.5	967	1149	-1.9	-1.3	-4	5					
50'	50.00									-1.7	-1.0	.0	-.0	.0
		-1.7	-1.0	870	980	-1.9	-1.0	-5	8					
TOP	59.00									0.0	0.0	0.0	0.0	0.0

TABLE 7. SHEAR AND MOMENT DIAGRAMS : 1999 BROADWAY CHURCH, TOWER NOT IN PLACE
WIND DIRECTION 290 CONFIGURATION B REFERENCE PRESSURE 22.0 PSF GUST FACTOR 1.32

FLOOR	HEIGHT	FORCE (KIPS) X	FORCE (KIPS) Y	AREA (SQ FT) X	AREA (SQ FT) Y	PRESSURE (PSF) X	PRESSURE (PSF) Y	ECCEN (FT) X	ECCEN (FT) Y	SHEAR (KIPS) X	SHEAR (KIPS) Y	MOMENT (1000-FT-KIPS) X	MOMENT (1000-FT-KIPS) Y	MOMENT (1000-FT-KIPS) Z
0'	0.00									-14.3	-7.2	.2	-.4	.1
		-2.1	-1.0	967	1257	-2.2	-.8	-3	6					
10'	10.00									-12.2	-6.2	.2	-.3	.1
		-2.0	-.5	967	1257	-2.1	-.4	-3	12					
20'	20.00									-10.2	-5.7	.1	-.2	.1
		-2.5	-1.0	967	1255	-2.5	-.8	-5	11					
30'	30.00									-7.7	-4.7	.1	-.1	.0
		-2.8	-1.7	967	1212	-2.9	-1.4	-7	12					
40'	40.00									-5.0	-3.0	.0	-.0	-.0
		-2.7	-1.6	967	1149	-2.8	-1.4	0	-1					
50'	50.00									-2.3	-1.4	.0	-.0	-.0
		-2.3	-1.4	870	980	-2.6	-1.4	0	-1					
TOP	59.00									0.0	0.0	0.0	0.0	0.0

TABLE 7. SHEAR AND MOMENT DIAGRAMS : 1999 BROADWAY CHURCH, TOWER NOT IN PLACE
WIND DIRECTION 300 CONFIGURATION B REFERENCE PRESSURE 22.0 PSF GUST FACTOR 1.32

FLOOR	HEIGHT	FORCE (KIPS) X	FORCE (KIPS) Y	AREA (SQ FT) X	AREA (SQ FT) Y	PRESSURE (PSF) X	PRESSURE (PSF) Y	ECCEN (FT) X	ECCEN (FT) Y	SHEAR (KIPS) X	SHEAR (KIPS) Y	MOMENT (1000-FT-KIPS) X	MOMENT (1000-FT-KIPS) Y	MOMENT (1000-FT-KIPS) Z
0'	0.00									-16.1	-9.2	.3	-.5	.1
		-2.4	-1.4	967	1257	-2.5	-1.1	-1	2					
10'	10.00									-13.7	-7.7	.2	-.4	.1
		-2.1	-.7	967	1257	-2.2	-.5	-3	10					
20'	20.00									-11.5	-7.1	.1	-.2	.1
		-2.8	-1.4	967	1255	-2.9	-1.1	-4	9					
30'	30.00									-8.7	-5.6	.1	-.1	.0
		-3.2	-2.1	967	1212	-3.3	-1.8	-7	10					
40'	40.00									-5.5	-3.5	.0	-.1	-.0
		-2.9	-1.9	967	1149	-3.1	-1.6	0	-1					
50'	50.00									-2.6	-1.7	.0	-.0	-.0
		-2.6	-1.7	870	980	-3.0	-1.7	0	-1					
TOP	59.00									0.0	0.0	0.0	0.0	0.0

TABLE 7. SHEAR AND MOMENT DIAGRAMS : 1999 BROADWAY CHURCH, TOWER NOT IN PLACE
WIND DIRECTION 310 CONFIGURATION B REFERENCE PRESSURE 22.0 PSF GUST FACTOR 1.32

FLOOR	HEIGHT	FORCE (KIPS) X	FORCE (KIPS) Y	AREA (SQ FT) X	AREA (SQ FT) Y	PRESSURE (PSF) X	PRESSURE (PSF) Y	ECCEN (FT) X	ECCEN (FT) Y	SHEAR (KIPS) X	SHEAR (KIPS) Y	MOMENT (1000-FT-KIPS) X	MOMENT (1000-FT-KIPS) Y	MOMENT (1000-FT-KIPS) Z
0'	0.00									-13.2	-6.0	.2	-.4	.1
		-1.9	-1.0	967	1257	-2.0	-.9	-2	4					
10'	10.00									-11.3	-5.0	.1	-.3	.1
		-1.8	-.4	967	1257	-1.8	-.3	-3	13					
20'	20.00									-9.6	-4.6	.1	-.2	.1
		-2.4	-.8	967	1255	-2.4	-.7	-4	13					
30'	30.00									-7.2	-3.8	.1	-.1	.0
		-2.7	-1.4	967	1212	-2.7	-1.1	-6	12					
40'	40.00									-4.6	-2.4	.0	-.0	-.0
		-2.5	-1.4	967	1149	-2.5	-1.2	1	-2					
50'	50.00									-2.1	-1.0	.0	-.0	-.0
		-2.1	-1.0	870	980	-2.4	-1.0	1	-3					
TOP	59.00									0.0	0.0	0.0	0.0	0.0

TABLE 7. SHEAR AND MOMENT DIAGRAMS : 1999 BROADWAY CHURCH, TOWER NOT IN PLACE
WIND DIRECTION 320 CONFIGURATION B REFERENCE PRESSURE 22.9 PSF GUST FACTOR 1.32

FLOOR	HEIGHT	FORCE (KIPS) X	FORCE (KIPS) Y	AREA (SQ FT) X	AREA (SQ FT) Y	PRESSURE (PSF) X	PRESSURE (PSF) Y	ECCEN (FT) X	ECCEN (FT) Y	SHEAR (KIPS) X	SHEAR (KIPS) Y	MOMENT (1000-FT-KIPS) X	MOMENT (1000-FT-KIPS) Y	MOMENT (1000-FT-KIPS) Z
0'	0.00									-16.5	-1.7	.1	-.6	.2
		-1.6	-.3	967	1257	-1.7	-.3	-5	23					
10'	10.00									-14.8	-1.3	.1	-.4	.2
		-1.6	.2	967	1257	-1.7	.1	3	30					
20'	20.00									-13.2	-1.5	.0	-.3	.1
		-3.0	.0	967	1255	-3.1	.0	0	20					
30'	30.00									-10.2	-1.5	.0	-.2	.0
		-3.1	-.3	967	1212	-3.2	-.2	-2	19					
40'	40.00									-7.1	-1.3	.0	-.1	-.0
		-3.7	-1.0	967	1149	-3.8	-.9	1	-4					
50'	50.00									-3.4	-.3	.0	-.0	-.0
		-3.4	-.3	870	980	-3.9	-.3	0	-1					
TOP	59.00									0.0	0.0	0.0	0.0	0.0

TABLE 7. SHEAR AND MOMENT DIAGRAMS : 1999 BROADWAY CHURCH, TOWER NOT IN PLACE
WIND DIRECTION 330 CONFIGURATION B REFERENCE PRESSURE 22.0 PSF GUST FACTOR 1.32

FLOOR	HEIGHT	FORCE (KIPS) X	FORCE (KIPS) Y	AREA (SQ FT) X	AREA (SQ FT) Y	PRESSURE (PSF) X	PRESSURE (PSF) Y	ECCEN (FT) X	ECCEN (FT) Y	SHEAR (KIPS) X	SHEAR (KIPS) Y	MOMENT (1000-FT-KIPS) X	MOMENT (1000-FT-KIPS) Y	MOMENT (1000-FT-KIPS) Z
0'	0.00									-13.6	2.2	-.1	-.5	.3
		-.8	-.3	967	1257	-.9	-.3	-14	39					
10'	10.00									-12.7	2.6	-.1	-.4	.3
		-.9	.7	967	1257	-1.0	.6	35	46					
20'	20.00									-11.8	1.9	-.0	-.2	.2
		-2.4	.8	967	1255	-2.5	.6	9	29					
30'	30.00									-9.4	1.1	-.0	-.1	.1
		-2.8	.7	967	1212	-2.9	.5	6	27					
40'	40.00									-6.5	.4	-.0	-.1	.0
		-3.6	.1	967	1149	-3.8	.0	0	6					
50'	50.00									-2.9	.4	-.0	-.0	.0
		-2.9	.4	870	980	-3.3	.4	1	6					
TOP	59.00									0.0	0.0	0.0	0.0	0.0

TABLE 7. SHEAR AND MOMENT DIAGRAMS : 1999 BROADWAY CHURCH, TOWER NOT IN PLACE
WIND DIRECTION 340 CONFIGURATION B REFERENCE PRESSURE 22.0 PSF GUST FACTOR 1.32

FLOOR	HEIGHT	FORCE (KIPS) X	FORCE (KIPS) Y	AREA (SQ FT) X	AREA (SQ FT) Y	PRESSURE (PSF) X	PRESSURE (PSF) Y	ECCEN (FT) X	ECCEN (FT) Y	SHEAR (KIPS) X	SHEAR (KIPS) Y	MOMENT (1000-FT-KIPS) X	MOMENT (1000-FT-KIPS) Y	MOMENT (1000-FT-KIPS) Z
0'	0.00									-12.6	1.9	-.1	-.4	.3
		-1.2	-.3	967	1257	-1.3	-.3	-6	24					
10'	10.00									-11.3	2.2	-.0	-.3	.2
		-1.3	.7	967	1257	-1.3	.5	16	31					
20'	20.00									-10.0	1.6	-.0	-.2	.2
		-2.4	.7	967	1255	-2.4	.6	7	24					
30'	30.00									-7.7	.8	-.0	-.1	.1
		-2.5	.4	967	1212	-2.6	.3	4	26					
40'	40.00									-5.1	.4	-.0	-.0	.0
		-2.8	.0	967	1149	-2.9	.0	0	6					
50'	50.00									-2.4	.4	-.0	-.0	.0
		-2.4	.4	870	980	-2.7	.4	1	8					
TOP	59.00									0.0	0.0	0.0	0.0	0.0

TABLE 7. SHEAR AND MOMENT DIAGRAMS : 1999 BROADWAY CHURCH, TOWER NOT IN PLACE
WIND DIRECTION 350 CONFIGURATION B REFERENCE PRESSURE 22.0 PSF GUST FACTOR 1.32

FLOOR	HEIGHT	FORCE (KIPS) X	FORCE (KIPS) Y	AREA (SQ FT) X	AREA (SQ FT) Y	PRESSURE (PSF) X	PRESSURE (PSF) Y	ECCEN (FT) X	ECCEN (FT) Y	SHEAR (KIPS) X	SHEAR (KIPS) Y	MOMENT (1000-FT-KIPS) X	MOMENT (1000-FT-KIPS) Y	MOMENT (1000-FT-KIPS) Z
0'	0.00									-10.5	3.0	-.1	-.3	.2
		-1.0	.4	967	1257	-1.1	.3	1	4					
10'	10.00									-9.5	2.6	-.1	-.2	.2
		-1.3	.7	967	1257	-1.3	.6	10	19					
20'	20.00									-8.3	1.9	-.0	-.2	.1
		-2.2	.6	967	1255	-2.3	.5	7	23					
30'	30.00									-6.1	1.3	-.0	-.1	.1
		-2.2	.5	967	1212	-2.3	.4	6	25					
40'	40.00									-3.8	.8	-.0	-.0	.0
		-1.9	.3	967	1149	-2.0	.3	1	8					
50'	50.00									-1.9	.4	-.0	-.0	.0
		-1.9	.4	870	980	-2.2	.5	2	9					
TOP	59.00									0.0	0.0	0.0	0.0	0.0

TABLE 7. SHEAR AND MOMENT DIAGRAMS : 1999 BROADWAY CHURCH, TOWER IN PLACE
WIND DIRECTION 0 CONFIGURATION A REFERENCE PRESSURE 22.0 PSF GUST FACTOR 1.32

FLOOR	HEIGHT	FORCE (KIPS) X	FORCE (KIPS) Y	AREA (SQ FT) X	AREA (SQ FT) Y	PRESSURE (PSF) X	PRESSURE (PSF) Y	ECCEN (FT) X	ECCEN (FT) Y	SHEAR (KIPS) X	SHEAR (KIPS) Y	MOMENT (1000-FT-KIPS) X	MOMENT (1000-FT-KIPS) Y	MOMENT (1000-FT-KIPS) Z
0'	0.00									23.4	-2.3	.0	.7	-.2
		4.5	-.8	967	1257	4.6	-.6	2	12					
10'	10.00									18.9	-1.5	-.0	.5	-.2
		3.5	-.7	967	1257	3.6	-.6	2	12					
20'	20.00									15.4	-.8	-.0	.3	-.2
		4.7	-.9	967	1255	4.9	-.7	2	11					
30'	30.00									10.7	.1	-.0	.2	-.1
		3.4	-.9	967	1212	3.5	-.7	0	1					
40'	40.00									7.3	1.0	-.0	.1	-.1
		2.7	-.2	967	1149	2.8	-.1	1	20					
50'	50.00									4.7	1.1	-.0	.0	-.0
		4.7	1.1	870	980	5.3	1.2	-2	8					
TOP	59.00									0.0	0.0	0.0	0.0	0.0

TABLE 7. SHEAR AND MOMENT DIAGRAMS : 1999 BROADWAY CHURCH, TOWER IN PLACE
WIND DIRECTION 10 CONFIGURATION A REFERENCE PRESSURE 22.0 PSF GUST FACTOR 1.32

FLOOR	HEIGHT	FORCE (KIPS) X	FORCE (KIPS) Y	AREA (SQ FT) X	AREA (SQ FT) Y	PRESSURE (PSF) X	PRESSURE (PSF) Y	ECCEN (FT) X	ECCEN (FT) Y	SHEAR (KIPS) X	SHEAR (KIPS) Y	MOMENT (1000-FT-KIPS) X	MOMENT (1000-FT-KIPS) Y	MOMENT (1000-FT-KIPS) Z
0'	0.00									14.9	21.7	-.7	.4	-.0
		3.2	2.7	967	1257	3.3	2.2	-9	10					
10'	10.00									11.7	19.0	-.5	.3	.0
		2.7	3.8	967	1257	2.8	3.0	-2	1					
20'	20.00									9.0	15.2	-.3	.2	.0
		3.1	3.5	967	1255	3.2	2.8	-1	1					
30'	30.00									5.9	11.7	-.2	.1	.0
		2.0	3.6	967	1212	2.1	2.9	10	-6					
40'	40.00									3.9	8.1	-.1	.0	-.0
		.9	4.2	967	1149	1.0	3.6	-2	0					
50'	50.00									2.9	4.0	-.0	.0	-.0
		2.9	4.0	870	980	3.4	4.1	-0	0					
TOP	59.00									0.0	0.0	0.0	0.0	0.0

TABLE 7. SHEAR AND MOMENT DIAGRAMS : 1999 BROADWAY CHURCH, TOWER IN PLACE
WIND DIRECTION 20 CONFIGURATION A REFERENCE PRESSURE 22.0 PSF GUST FACTOR 1.32

FLOOR	HEIGHT	FORCE (KIPS) X	FORCE (KIPS) Y	AREA (SQ FT) X	AREA (SQ FT) Y	PRESSURE (PSF) X	PRESSURE (PSF) Y	ECCEN (FT) X	ECCEN (FT) Y	SHEAR (KIPS) X	SHEAR (KIPS) Y	MOMENT (1000-FT-KIPS) X	MOMENT (1000-FT-KIPS) Y	MOMENT (1000-FT-KIPS) Z
0'	0.00									14.9	41.9	-1.3	.4	.2
		3.2	5.3	967	1257	3.3	4.3	-4	2					
10'	10.00									11.8	36.6	-.9	.2	.2
		3.4	7.6	967	1257	3.5	6.0	7	-3					
20'	20.00									8.3	29.0	-.5	.1	.2
		3.0	7.8	967	1255	3.1	6.2	6	-2					
30'	30.00									5.3	21.1	-.3	.1	1
		2.5	7.5	967	1212	2.6	6.2	8	-3					
40'	40.00									2.8	13.6	-.1	.0	.0
		1.1	7.9	967	1149	1.2	6.9	-0	0					
50'	50.00									1.7	5.7	-.0	.0	.0
		1.7	5.7	870	980	1.9	5.8	5	-1					
TOP	59.00									0.0	0.0	0.0	0.0	0.0

TABLE 7. SHEAR AND MOMENT DIAGRAMS : 1999 BROADWAY CHURCH, TOWER IN PLACE
WIND DIRECTION 30 CONFIGURATION A REFERENCE PRESSURE 22.0 PSF GUST FACTOR 1.32

FLOOR	HEIGHT	FORCE (KIPS) X	FORCE (KIPS) Y	AREA (SQ FT) X	AREA (SQ FT) Y	PRESSURE (PSF) X	PRESSURE (PSF) Y	ECCEN (FT) X	ECCEN (FT) Y	SHEAR (KIPS) X	SHEAR (KIPS) Y	MOMENT (1000-FT-KIPS) X	MOMENT (1000-FT-KIPS) Y	MOMENT (1000-FT-KIPS) Z
0'	0.00									14.9	59.7	-1.8	.4	.3
		2.3	8.7	967	1257	2.4	6.9	-4	1					
10'	10.00									12.6	51.1	-1.2	.3	.3
		3.8	10.9	967	1257	4.0	8.7	8	-3					
20'	20.00									8.8	40.1	-.7	.2	.2
		2.5	10.9	967	1255	2.5	8.7	7	-2					
30'	30.00									6.3	29.2	-.4	.1	.1
		2.9	10.7	967	1212	3.0	8.8	4	-1					
40'	40.00									3.5	18.5	-.2	.0	.1
		1.6	11.4	967	1149	1.6	9.9	2	-0					
50'	50.00									1.9	7.1	-.0	.0	.1
		1.9	7.1	870	980	2.1	7.3	7	-2					
TOP	59.00									0.0	0.0	0.0	0.0	0.0

TABLE 7. SHEAR AND MOMENT DIAGRAMS : 1999 BROADWAY CHURCH, TOWER IN PLACE
WIND DIRECTION 40 CONFIGURATION A REFERENCE PRESSURE 22.0 PSF GUST FACTOR 1.32

FLOOR	HEIGHT	FORCE (KIPS) X	FORCE (KIPS) Y	AREA (SQ FT) X	AREA (SQ FT) Y	PRESSURE (PSF) X	PRESSURE (PSF) Y	ECCEN (FT) X	ECCEN (FT) Y	SHEAR (KIPS) X	SHEAR (KIPS) Y	MOMENT (1000-FT-KIPS) X	MOMENT (1000-FT-KIPS) Y	MOMENT (1000-FT-KIPS) Z
0'	0.00									17.7	63.7	-1.8	.5	.3
		2.6	10.0	967	1257	2.7	8.0	-3	1					
10'	10.00									15.1	53.7	-1.2	.3	.3
		5.0	12.0	967	1257	5.1	9.6	8	-3					
20'	20.00									10.1	41.7	-.7	.2	.2
		2.9	12.1	967	1255	3.0	9 6	10	-2					
30'	30.00									7.2	29.6	-.4	.1	1
		3.1	11.8	967	1212	3.2	9.8	4	-1					
40'	40.00									4.1	17.8	-.2	.0	.0
		2.0	11.1	967	1149	2.0	9.7	-0	0					
50'	50.00									2.1	6.7	-.0	.0	.0
		2.1	6.7	870	980	2.4	6.8	6	-2					
TOP	59.00									0.0	0.0	0.0	0.0	0.0

TABLE 7. SHEAR AND MOMENT DIAGRAMS : 1999 BROADWAY CHURCH, TOWER IN PLACE
WIND DIRECTION 50 CONFIGURATION A REFERENCE PRESSURE 22.0 PSF GUST FACTOR 1.32

FLOOR	HEIGHT	FORCE (KIPS) X	FORCE (KIPS) Y	AREA (SQ FT) X	AREA (SQ FT) Y	PRESSURE (PSF) X	PRESSURE (PSF) Y	ECCEN (FT) X	ECCEN (FT) Y	SHEAR (KIPS) X	SHEAR (KIPS) Y	MOMENT (1000-FT-KIPS) X	MOMENT (1000-FT-KIPS) Y	MOMENT (1000-FT-KIPS) Z
0'	0.00									21.8	63.4	-1.7	.6	.3
		3.5	11.6	967	1257	3.6	9.3	-4	1					
10'	10.00									18.3	51.8	-1.1	.4	.4
		6.2	12.8	967	1257	6.5	10.2	8	-4					
20'	20.00									12.1	39.0	-.7	.2	.3
		3.3	12.1	967	1255	3.4	9.6	11	-3					
30'	30.00									8.8	26.9	-.3	.1	.1
		4.0	11.8	967	1212	4.2	9.7	4	-1					
40'	40.00									4.7	15.1	-.1	.0	.1
		3.1	9.8	967	1149	3.2	8.5	-1	0					
50'	50.00									1.6	5.3	-.0	.0	.1
		1.6	5.3	870	980	1.8	5.4	12	-4					
TOP	59.00									0.0	0.0	0.0	0.0	0.0

TABLE 7. SHEAR AND MOMENT DIAGRAMS : 1999 BROADWAY CHURCH, TOWER IN PLACE
WIND DIRECTION 60 CONFIGURATION A REFERENCE PRESSURE 22.0 PSF GUST FACTOR 1.32

FLOOR	HEIGHT	FORCE (KIPS) X	FORCE (KIPS) Y	AREA (SQ FT) X	AREA (SQ FT) Y	PRESSURE (PSF) X	PRESSURE (PSF) Y	ECCEN (FT) X	ECCEN (FT) Y	SHEAR (KIPS) X	SHEAR (KIPS) Y	MOMENT (1000-FT-KIPS) X	MOMENT (1000-FT-KIPS) Y	MOMENT (1000-FT-KIPS) Z
0'	0.00									24.6	57.8	-1.5	.6	.4
		4.2	12.0	967	1257	4.4	9.6	-3	1					
10'	10.00									20.4	45.8	-1.0	.4	.4
		6.9	11.6	967	1257	7.2	9.3	9	-5					
20'	20.00									13.4	34.1	-.6	.2	.3
		3.4	10.9	967	1255	3.5	8.7	14	-4					
30'	30.00									10.1	23.2	-.3	.1	.1
		4.4	11.5	967	1212	4.6	9.5	7	-3					
40'	40.00									5.6	11.7	-.1	.0	.1
		4.6	7.6	967	1149	4.8	6.6	-2	1					
50'	50.00									1.0	4.1	-.0	.0	.1
		1.0	4.1	870	980	1.2	4.2	18	-4					
TOP	59.00									0.0	0.0	0.0	0.0	0.0

TABLE 7. SHEAR AND MOMENT DIAGRAMS : 1999 BROADWAY CHURCH, TOWER IN PLACE
WIND DIRECTION 70 CONFIGURATION A REFERENCE PRESSURE 22.0 PSF GUST FACTOR 1.32

FLOOR	HEIGHT	FORCE (KIPS) X	FORCE (KIPS) Y	AREA (SQ FT) X	AREA (SQ FT) Y	PRESSURE (PSF) X	PRESSURE (PSF) Y	ECCEN (FT) X	ECCEN (FT) Y	SHEAR (KIPS) X	SHEAR (KIPS) Y	MOMENT (1000-FT-KIPS) X	MOMENT (1000-FT-KIPS) Y	MOMENT (1000-FT-KIPS) Z
0'	0.00									22.2	47.2	-1.1	.5	.4
		4.0	10.9	967	1257	4.1	8.7	-4	1					
10'	10.00									18.2	36.3	-.7	.3	.5
		6.9	9.9	967	1257	7.1	7.9	9	-6					
20'	20.00									11.3	26.4	-.4	.2	.3
		2.9	9.0	967	1255	3.0	7.2	17	-5					
30'	30.00									8.4	17.4	-.2	.1	.2
		3.8	9.5	967	1212	3.9	7.8	9	-4					
40'	40.00									4.7	7.9	-.1	.0	.1
		4.8	5.0	967	1149	4.9	4.3	-2	2					
50'	50.00									-.1	2.9	-.0	-.0	.1
		-.1	2.9	870	980	-.1	3.0	33	1					
TOP	59.00									0.0	0.0	0.0	0.0	0.0

TABLE 7. SHEAR AND MOMENT DIAGRAMS : 1999 BROADWAY CHURCH, TOWER IN PLACE
WIND DIRECTION SO CONFIGURATION A REFERENCE PRESSURE 22.0 PSF GUST FACTOR 1.32

FLOOR	HEIGHT	FORCE (KIPS) X	FORCE (KIPS) Y	AREA (SQ FT) X	AREA (SQ FT) Y	PRESSURE (PSF) X	PRESSURE (PSF) Y	ECCEN (FT) X	ECCEN (FT) Y	SHEAR (KIPS) X	SHEAR (KIPS) Y	MOMENT (1000-FT-KIPS) X	MOMENT (1000-FT-KIPS) Y	MOMENT (1000-FT-KIPS) Z
0'	0.00									14.1	31.9	-.7	.3	.3
		2.8	9.0	967	1257	2.9	7.2	-8	2					
10'	10.00									11.4	23.0	-.4	.2	.4
		5.6	7.2	967	1257	5.8	5.8	8	-6					
20'	20.00									5.7	15.7	-.2	.1	.3
		1.1	6.3	967	1255	1.1	5.1	20	-3					
30'	30.00									4.7	9.4	-.1	.1	.2
		1.7	7.1	967	1212	1.8	5.8	12	-3					
40'	40.00									2.9	2.3	-.0	.0	.1
		3.1	1.7	967	1149	3.2	1.5	0	-0					
50'	50.00									-.1	.6	-.0	-.0	.1
		-.1	.6	870	980	-.1	.6	135	29					
TOP	59.00									0.0	0.0	0.0	0.0	0.0

TABLE 7. SHEAR AND MOMENT DIAGRAMS : 1999 BROADWAY CHURCH TOWER IN PLACE
WIND DIRECTION 90 CONFIGURATION A REFERENCE PRESSURE 22.0 PSF GUST FACTOR 1.32

FLOOR	HEIGHT	FORCE (KIPS) X	FORCE (KIPS) Y	AREA (SQ FT) X	AREA (SQ FT) Y	PRESSURE (PSF) X	PRESSURE (PSF) Y	ECCEN (FT) X	ECCEN (FT) Y	SHEAR (KIPS) X	SHEAR (KIPS) Y	MOMENT (1000-FT-KIPS) X	MOMENT (1000-FT-KIPS) Y	MOMENT (1000-FT-KIPS) Z
0'	0.00									7.4	20.8	-.3	.1	.3
		2.1	7.9	967	1257	2.2	6.3	-5	1					
10'	10.00									5.3	12.9	-.2	.0	.4
		4.1	5.2	967	1257	4.2	4.1	8	-7					
20'	20.00									1.2	7.7	-.0	.0	.3
		.5	4.4	967	1255	.5	3.5	26	-3					
30'	30.00									.7	3.3	.0	-.0	.2
		.5	5.0	967	1212	.6	4.1	20	-2					
40'	40.00									.1	-1.7	.0	-.0	.1
		1.1	-.9	967	1149	1.1	-.8	0	0					
50'	50.00									-1.0	-.8	.0	-.0	.1
		-1.0	-.8	870	980	-1.1	-.8	-45	56					
TOP	59.00									0.0	0.0	0.0	0.0	0.0

TABLE 7 SHEAR AND MOMENT DIAGRAMS : 1999 BROADWAY CHURCH, TOWER IN PLACE
WIND DIRECTION 100 CONFIGURATION A REFERENCE PRESSURE 22.0 PSF GUST FACTOR 1.32

FLOOR	HEIGHT	FORCE (KIPS) X	FORCE (KIPS) Y	AREA (SQ FT) X	AREA (SQ FT) Y	PRESSURE (PSF) X	PRESSURE (PSF) Y	ECCEN (FT) X	ECCEN (FT) Y	SHEAR (KIPS) X	SHEAR (KIPS) Y	MOMENT (1000-FT-KIPS) X	MOMENT (1000-FT-KIPS) Y	MOMENT (1000-FT-KIPS) Z
0'	0.00									-.5	13.8	-.1	-.1	.2
		1.2	6.6	967	1257	1.2	5.2	-10	2					
10'	10.00									-1.6	7.2	-.0	-.1	.3
		2.3	3.6	967	1257	2.4	2.9	2	-1					
20'	20.00									-4.0	3.5	.0	-.1	.3
		-.9	3.3	967	1255	-1.0	2.7	24	7					
30'	30.00									-3.1	.2	.0	-.1	.2
		-.7	3.1	967	1212	-.7	2.6	32	7					
40'	40.00									-2.4	-2.9	.0	-.0	.1
		-.5	-1.7	967	1149	-.5	-1.5	-1	0					
50'	50.00									-1.9	-1.2	.0	-.0	.1
		-1.9	-1.2	870	980	-2.2	-1.3	-23	35					
TOP	59.00									0.0	0.0	0.0	0.0	0.0

TABLE 7. SHEAR AND MOMENT DIAGRAMS : 1999 BROADWAY CHURCH, TOWER IN PLACE
WIND DIRECTION 110 CONFIGURATION A REFERENCE PRESSURE 22.0 PSF GUST FACTOR 1.32

FLOOR	HEIGHT	FORCE (KIPS) X	FORCE (KIPS) Y	AREA (SQ FT) X	AREA (SQ FT) Y	PRESSURE (PSF) X	PRESSURE (PSF) Y	ECCEN (FT) X	ECCEN (FT) Y	SHEAR (KIPS) X	SHEAR (KIPS) Y	MOMENT (1000-FT-KIPS) X	MOMENT (1000-FT-KIPS) Y	MOMENT (1000-FT-KIPS) Z
0'	0.00									-2.9	8.5	-.0	-.2	.2
10'	10.00	.8	5.4	967	1257	.8	4.3	-9	1	-3.7	3.1	.0	-.1	.3
20'	20.00	1.2	2.0	967	1257	1.3	1.6	2	-1	-4 9	1.1	.0	-.1	.3
30'	30.00	-1.0	1.7	967	1255	-1.1	1.3	35	22	-3.9	-.5	.0	-.1	.2
40'	40 00	-1.1	1.7	967	1212	-1.1	1.4	47	31	-2.8	-2.2	.0	-.0	.1
50'	50.00	-1.6	-1.3	967	1149	-1.7	-1.1	-4	5	-1.2	-.9	.0	-.0	.1
TOP	59.00	-1.2	-.9	870	980	-1.3	-.9	-28	36	0.0	0.0	0.0	0.0	0.0

TABLE 7. SHEAR AND MOMENT DIAGRAMS : 1999 BROADWAY CHURCH, TOWER IN PLACE
WIND DIRECTION 120 CONFIGURATION A REFERENCE PRESSURE 22.0 PSF GUST FACTOR 1.32

FLOOR	HEIGHT	FORCE (KIPS) X	FORCE (KIPS) Y	AREA (SQ FT) X	AREA (SQ FT) Y	PRESSURE (PSF) X	PRESSURE (PSF) Y	ECCEN (FT) X	ECCEN (FT) Y	SHEAR (KIPS) X	SHEAR (KIPS) Y	MOMENT (1000-FT-KIPS) X	MOMENT (1000-FT-KIPS) Y	MOMENT (1000-FT-KIPS) Z
0'	0.00									-4.8	4.2	.0	-.2	.2
		.5	4.3	967	1257	.5	3.4	-15	2					
10'	10.00									-5.4	-.1	.1	-.2	.2
		.4	.9	967	1257	.5	.7	5	-2					
20'	20.00									-5.8	-1.0	.0	-.1	.2
		-1.1	.5	967	1255	-1.1	.4	19	43					
30'	30.00									-4.7	-1.4	.0	-.1	.2
		-1.5	.5	967	1212	-1.5	.4	15	47					
40'	40.00									-3.2	-1.9	.0	-.0	.1
		-1.9	-1.1	967	1149	-2.0	-1.0	-5	8					
50'	50.00									-1.3	-.8	.0	-.0	.1
		-1.3	-.8	870	980	-1.5	-.8	-23	36					
TOP	59.00									0.0	0.0	0.0	0.0	0.0

TABLE 7. SHEAR AND MOMENT DIAGRAMS : 1999 BROADWAY CHURCH, TOWER IN PLACE
WIND DIRECTION 130 CONFIGURATION A REFERENCE PRESSURE 22.0 PSF GUST FACTOR 1.32

FLOOR	HEIGHT	FORCE (KIPS) X	FORCE (KIPS) Y	AREA (SQ FT) X	AREA (SQ FT) Y	PRESSURE (PSF) X	PRESSURE (PSF) Y	ECCEN (FT) X	ECCEN (FT) Y	SHEAR (KIPS) X	SHEAR (KIPS) Y	MOMENT (1000-FT-KIPS) X	MOMENT (1000-FT-KIPS) Y	MOMENT (1000-FT-KIPS) Z
0'	0.00									-6.9	2.6	.1	-.3	.1
		-.2	4.2	967	1257	-.2	3.3	-10	-0					
10'	10.00									-6.7	-1.6	.1	-.2	.2
		.3	.6	967	1257	.3	.4	-17	9					
20'	20.00									-7.0	-2.2	.1	-.1	.2
		-1.7	-.0	967	1255	-1.7	-.0	-0	29					
30'	30.00									-5.3	-2.2	.0	-.1	.2
		-1.8	.2	967	1212	-1.9	.2	6	47					
40'	40.00									-3.5	-2.4	.0	-.0	.1
		-2.1	-1.4	967	1149	-2.2	-1.2	-3	5					
50'	50.00									-1.4	-1.0	.0	-.0	.1
		-1.4	-1.0	870	980	-1.6	-1.1	-18	24					
TOP	59.00									0.0	0.0	0.0	0.0	0.0

TABLE 7. SHEAR AND MOMENT DIAGRAMS : 1999 BROADWAY CHURCH, TOWER IN PLACE
WIND DIRECTION 140 CONFIGURATION A REFERENCE PRESSURE 22.0 PSF GUST FACTOR 1.32

FLOOR	HEIGHT	FORCE (KIPS) X	FORCE (KIPS) Y	AREA (SQ FT) X	AREA (SQ FT) Y	PRESSURE (PSF) X	PRESSURE (PSF) Y	ECCEN (FT) X	ECCEN (FT) Y	SHEAR (KIPS) X	SHEAR (KIPS) Y	MOMENT (1000-FT-KIPS) X	MOMENT (1000-FT-KIPS) Y	MOMENT (1000-FT-KIPS) Z
0'	0.00									-6.9	-5.3	.2	-.2	-.0
		-.8	.9	967	1257	-.9	.7	-28	-26					
10'	10.00									-6.1	-6.3	.1	-.2	.0
		-.9	-1.5	967	1257	-.9	-1.2	26	-16					
20'	20.00									-5.2	-4.7	.1	-.1	.1
		-1.4	-1.8	967	1255	-1.5	-1.4	7	-5					
30'	30.00									-3.8	-3.0	.0	-.1	.1
		-1.3	-1.5	967	1212	-1.4	-1.3	-7	6					
40'	40.00									-2.4	-1.4	.0	-.0	.1
		-1.4	-1.3	967	1149	-1.5	-1.1	-5	5					
50'	50.00									-1.0	-.1	.0	-.0	.0
		-1.0	-.1	870	980	-1.2	-.1	-5	45					
TOP	59.00									0.0	0.0	0.0	0.0	0.0

TABLE 7. SHEAR AND MOMENT DIAGRAMS : 1999 BROADWAY CHURCH, TOWER IN PLACE
WIND DIRECTION 150 CONFIGURATION A REFERENCE PRESSURE 22.0 PSF GUST FACTOR 1.32

FLOOR	HEIGHT	FORCE (KIPS) X	FORCE (KIPS) Y	AREA (SQ FT) X	AREA (SQ FT) Y	PRESSURE (PSF) X	PRESSURE (PSF) Y	ECCEN (FT) X	ECCEN (FT) Y	SHEAR (KIPS) X	SHEAR (KIPS) Y	MOMENT (1000-FT-KIPS) X	MOMENT (1000-FT-KIPS) Y	MOMENT (1000-FT-KIPS) Z
0'	0.00									-7.7	-9.1	.2	-.2	-.2
		-1.8	-1.5	967	1257	-1.9	-1.2	19	-22					
10'	10.00									-5.9	-7.5	.1	-.1	-.1
		-1.8	-2.4	967	1237	-1.9	-1.9	20	-15					
20'	20.00									-4.1	-5.1	.1	-.1	-.0
		-1.5	-1.7	967	1255	-1.6	-1.4	14	-12					
30'	30.00									-2.5	-3.4	.0	-.0	.0
		-1.3	-1.7	967	1212	-1.4	-1.4	7	-6					
40'	40.00									-1.2	-1.6	.0	-.0	.0
		-.9	-1.4	967	1149	-1.0	-1.3	-1	1					
50'	50.00									-.3	-.2	.0	-.0	.0
		-.3	-.2	870	980	-.3	-.2	-56	78					
TOP	59.00									0.0	0.0	0.0	0.0	0.0

TABLE 7. SHEAR AND MOMENT DIAGRAMS : 1999 BROADWAY CHURCH, TOWER IN PLACE
WIND DIRECTION 160 CONFIGURATION A REFERENCE PRESSURE 22.0 PSF GUST FACTOR 1.32

FLOOR	HEIGHT	FORCE (KIPS) X	FORCE (KIPS) Y	AREA (SQ FT) X	AREA (SQ FT) Y	PRESSURE (PSF) X	PRESSURE (PSF) Y	ECCEN (FT) X	ECCEN (FT) Y	SHEAR (KIPS) X	SHEAR (KIPS) Y	MOMENT (1000-FT-KIPS) X	MOMENT (1000-FT-KIPS) Y	MOMENT (1000-FT-KIPS) Z
0'	0.00									1.8	-11.1	.2	.1	-.3
		-.0	-3.8	967	1257	-.0	-3.1	34	-0					
10'	10.00									1.8	-7.3	.1	.0	-.2
		-.1	-3.4	967	1257	-.1	-2.7	39	-1					
20'	20.00									1.9	-3.9	.1	.0	-.1
		.6	-1.4	967	1255	.6	-1.1	41	18					
30'	30.00									1.3	-2.5	.0	.0	-.0
		1.1	-1.4	967	1212	1.1	-1.1	21	17					
40'	40.00									.2	-1.1	.0	.0	.0
		-.1	-1.3	967	1149	-.1	-1.2	3	-0					
50'	50.00									.3	.2	-.0	.0	.0
		.3	.2	870	980	.4	.2	66	-95					
TOP	59.00									0.0	0.0	0.0	0.0	0.0

TABLE 7. SHEAR AND MOMENT DIAGRAMS : 1999 BROADWAY CHURCH, TOWER IN PLACE
WIND DIRECTION 170 CONFIGURATION A REFERENCE PRESSURE 22.0 PSF GUST FACTOR 1.32

FLOOR	HEIGHT	FORCE (KIPS) X	FORCE (KIPS) Y	AREA (SQ FT) X	AREA (SQ FT) Y	PRESSURE (PSF) X	PRESSURE (PSF) Y	ECCEN (FT) X	ECCEN (FT) Y	SHEAR (KIPS) X	SHEAR (KIPS) Y	MOMENT (1000-FT-KIPS) X	MOMENT (1000-FT-KIPS) Y	MOMENT (1000-FT-KIPS) Z
0'	0.00									3.5	-7.7	.2	.1	-.3
		.3	-2.5	967	1257	.3	-2.0	34	5					
10'	10.00									3.2	-5.1	.1	.1	-.2
		.5	-2.1	967	1257	.6	-1.6	39	10					
20'	20.00									2.6	-3.1	.1	.0	-.1
		.8	-.6	967	1255	.9	-.5	24	34					
30'	30.00									1.8	-2.5	.0	.0	-.0
		1.0	-1.0	967	1212	1.0	-.8	23	23					
40'	40.00									.8	-1.5	.0	.0	.0
		.2	-1.5	967	1149	.2	-1.3	17	2					
50'	50.00									.6	-.0	.0	.0	.0
		.6	-.0	870	980	.7	-.0	-0	-45					
TOP	59.00									0.0	0.0	0.0	0.0	0.0

TABLE 7. SHEAR AND MOMENT DIAGRAMS : 1999 BROADWAY CHURCH, TOWER IN PLACE
WIND DIRECTION 180 CONFIGURATION A REFERENCE PRESSURE 22.0 PSF GUST FACTOR 1.32

FLOOR	HEIGHT	FORCE (KIPS) X	FORCE (KIPS) Y	AREA (SQ FT) X	AREA (SQ FT) Y	PRESSURE (PSF) X	PRESSURE (PSF) Y	ECCEN (FT) X	ECCEN (FT) Y	SHEAR (KIPS) X	SHEAR (KIPS) Y	MOMENT (1000-FT-KIPS) X	MOMENT (1000-FT-KIPS) Y	MOMENT (1000-FT-KIPS) Z
0'	0.00									3.6	-2.6	.0	.1	-.1
		.6	-1.5	967	1257	.6	-1.2	22	9					
10'	10.00									3.0	-1.1	.0	.1	-.1
		.9	-.8	967	1257	.9	-.6	12	13					
20'	20.00									2.1	-.3	-.0	.0	-.1
		.8	-.2	967	1255	.8	-.1	4	20					
30'	30.00									1.3	-.1	-.0	.0	-.0
		.9	-.2	967	1212	.9	-.2	11	37					
40'	40.00									.5	.1	-.0	.0	-.0
		.1	-.0	967	1149	.1	-.0	11	143					
50'	50.00									.3	.1	-.0	.0	.0
		.3	.1	870	980	.4	.1	12	-30					
TOP	59.00									0.0	0.0	0.0	0.0	0.0

TABLE 7. SHEAR AND MOMENT DIAGRAMS : 1999 BROADWAY CHURCH, TOWER IN PLACE
WIND DIRECTION 190 CONFIGURATION A REFERENCE PRESSURE 22.0 PSF GUST FACTOR 1.32

FLOOR	HEIGHT	FORCE (KIPS) X	FORCE (KIPS) Y	AREA (SQ FT) X	AREA (SQ FT) Y	PRESSURE (PSF) X	PRESSURE (PSF) Y	ECCEN (FT) X	ECCEN (FT) Y	SHEAR (KIPS) X	SHEAR (KIPS) Y	MOMENT (1000-FT-KIPS) X	MOMENT (1000-FT-KIPS) Y	MOMENT (1000-FT-KIPS) Z
0'	0.00									3.9	-9.2	.1	.1	-.2
		.6	-3.9	967	1257	.7	-3.1	15	3					
10'	10.00									3.2	-5.3	.1	.1	-.2
		.9	-2.6	967	1257	.9	-2.1	16	6					
20'	20.00									2.3	-2.7	.0	.0	-.1
		.8	-1.3	967	1255	.8	-1.1	23	13					
30'	30.00									1.6	-1.3	.0	.0	-.1
		.7	-1.3	967	1212	.7	-1.1	33	18					
40'	40.00									.8	-.0	-.0	.0	-.0
		.2	-.2	967	1149	.2	-.2	80	50					
50'	50.00									.7	.2	-.0	.0	-.0
		.7	.2	870	980	.8	.2	-5	15					
TOP	59.00									0.0	0.0	0.0	0.0	0.0

TABLE 7. SHEAR AND MOMENT DIAGRAMS : 1999 BROADWAY CHURCH, TOWER IN PLACE
WIND DIRECTION 290 CONFIGURATION A REFERENCE PRESSURE 22.0 PSF GUST FACTOR 1.32

FLOOR	HEIGHT	FORCE (KIPS) X	FORCE (KIPS) Y	AREA (SQ FT) X	AREA (SQ FT) Y	PRESSURE (PSF) X	PRESSURE (PSF) Y	ECCEN (FT) X	ECCEN (FT) Y	SHEAR (KIPS) X	SHEAR (KIPS) Y	MOMENT (1000-FT-KIPS) X	MOMENT (1000-FT-KIPS) Y	MOMENT (1000-FT-KIPS) Z
0'	0.00									5.1	-19.3	.3	.1	-.6
		.6	-7.5	967	1257	.7	-6.0	21	2					
10'	10.00									4.5	-11.8	.2	.1	-.4
		1.2	-5.1	967	1257	1.3	-4.1	22	5					
20'	20.00									3.2	-6.7	.1	.0	-.3
		1.4	-2.7	967	1255	1.4	-2.1	29	15					
30'	30.00									1.9	-4.0	.0	.0	-.2
		1.2	-2.8	967	1212	1.2	-2.3	31	13					
40'	40.00									.7	-1.2	.0	.0	-.1
		.0	-1.0	967	1149	.0	-.9	55	2					
50'	50.00									.6	-.1	.0	.0	-.0
		.6	-.1	870	980	.7	-.1	6	29					
TOP	59.00									0.0	0.0	0.0	0.0	0.0

TABLE 7. SHEAR AND MOMENT DIAGRAMS : 1999 BROADWAY CHURCH, TOWER IN PLACE
WIND DIRECTION 210 CONFIGURATION A REFERENCE PRESSURE 22.0 PSF GUST FACTOR 1.32

FLOOR	HEIGHT	FORCE (KIPS) X	FORCE (KIPS) Y	AREA (SQ FT) X	AREA (SQ FT) Y	PRESSURE (PSF) X	PRESSURE (PSF) Y	ECCEN (FT) X	ECCEN (FT) Y	SHEAR (KIPS) X	SHEAR (KIPS) Y	MOMENT (1000-FT-KIPS) X	MOMENT (1000-FT-KIPS) Y	MOMENT (1000-FT-KIPS) Z
0'	0.00									7.1	-19.9	.3	.2	-.7
		1.0	-7.9	967	1257	1.0	-6.3	23	3					
10'	10.00									6.1	-12.0	.2	.1	-.5
		1.4	-5.3	967	1257	1.4	-4.2	25	6					
20'	20.00									4.7	-6.6	.1	.1	-.3
		2.0	-2.8	967	1255	2.1	-2.2	28	20					
30'	30.00									2.7	-3.9	.0	.0	-.2
		1.6	-3.1	967	1212	1.6	-2.6	33	17					
40'	40.00									1.1	-.8	.0	.0	-.1
		.2	-.9	967	1149	.2	-.8	68	16					
50'	50.00									.9	.2	-.0	.0	-.0
		.9	.2	870	980	1.0	.2	-2	13					
TOP	59.00									0.0	0.0	0.0	0.0	0.0

TABLE 7. SHEAR AND MOMENT DIAGRAMS : 1999 BROADWAY CHURCH, TOWER IN PLACE
WIND DIRECTION 220 CONFIGURATION A REFERENCE PRESSURE 22.0 PSF GUST FACTOR 1.32

FLOOR	HEIGHT	FORCE (KIPS) X	FORCE (KIPS) Y	AREA (SQ FT) X	AREA (SQ FT) Y	PRESSURE (PSF) X	PRESSURE (PSF) Y	ECCEN (FT) X	ECCEN (FT) Y	SHEAR (KIPS) X	SHEAR (KIPS) Y	MOMENT (1000-FT-KIPS) X	MOMENT (1000-FT-KIPS) Y	MOMENT (1000-FT-KIPS) Z
0'	0.00									7.2	-11.1	.1	.2	-.5
		1.4	-5.2	967	1257	1.4	-4.1	23	6					
10'	10.00									5.8	-5.9	.1	.1	-.3
		1.6	-3.3	967	1257	1.6	-2.6	23	11					
20'	20.00									4.3	-2.6	.0	.1	-.3
		1.5	-1.5	967	1255	1.5	-1.2	26	26					
30'	30.00									2.8	-1.1	-.0	.0	-.2
		1.4	-1.7	967	1212	1.4	-1.4	36	30					
40'	40.00									1.4	.5	-.0	.0	-.1
		.3	.1	967	1149	.3	.1	-60	147					
50'	50.00									1.1	.4	-.0	.0	-.0
		1.1	.4	870	980	1.3	.4	-7	19					
TOP	59.00									0.0	0.0	0.0	0.0	0.0

TABLE 7. SHEAR AND MOMENT DIAGRAMS : 1999 BROADWAY CHURCH, TOWER IN PLACE
WIND DIRECTION 230 CONFIGURATION A REFERENCE PRESSURE 22.0 PSF GUST FACTOR 1.32

FLOOR	HEIGHT	FORCE (KIPS) X	FORCE (KIPS) Y	AREA (SQ FT) X	AREA (SQ FT) Y	PRESSURE (PSF) X	PRESSURE (PSF) Y	ECCEN (FT) X	ECCEN (FT) Y	SHEAR (KIPS) X	SHEAR (KIPS) Y	MOMENT (1000-FT-KIPS) X	MOMENT (1000-FT-KIPS) Y	MOMENT (1000-FT-KIPS) Z
0'	0.00									4.3	-5.1	.0	.1	-.2
		1.2	-2.8	967	1257	1.2	-2.2	11	5					
10'	10.00									3.1	-2.3	.0	.1	-.1
		1.2	-1.7	967	1257	1.2	-1.4	10	7					
20'	20.00									2.0	-.6	-.0	.0	-.1
		.7	-.7	967	1255	.8	-.6	18	18					
30'	30.00									1.3	.2	-.0	.0	-.1
		.7	-.8	967	1212	.7	-.6	34	29					
40'	40.00									.6	.9	-.0	.0	-.0
		-.0	.4	967	1149	-.0	.3	-47	-3					
50'	50.00									.6	.5	-.0	.0	-.0
		.6	.5	870	980	.7	.5	-6	7					
TOP	59.00									0.0	0.0	0.0	0.0	0.0

TABLE 7. SHEAR AND MOMENT DIAGRAMS : 1999 BROADWAY CHURCH, TOWER IN PLACE
WIND DIRECTION 240 CONFIGURATION A REFERENCE PRESSURE 22.0 PSF GUST FACTOR 1.32

FLOOR	HEIGHT	FORCE (KIPS) X	FORCE (KIPS) Y	AREA (SQ FT) X	AREA (SQ FT) Y	PRESSURE (PSF) X	PRESSURE (PSF) Y	ECCEN (FT) X	ECCEN (FT) Y	SHEAR (KIPS) X	SHEAR (KIPS) Y	MOMENT (1000-FT-KIPS) X	MOMENT (1000-FT-KIPS) Y	MOMENT (1000-FT-KIPS) Z
0'	0.00									2.7	-6.1	.1	.0	-.1
		.9	-2.7	967	1257	.9	-2.2	9	3					
10'	10.00									1.8	-3.3	.0	.0	-.1
		1.0	-2.0	967	1257	1.1	-1.6	8	4					
20'	20.00									.8	-1.4	-.0	.0	-.0
		.4	-1.1	967	1255	.4	-.9	12	5					
30'	30.00									.4	-.3	-.0	.0	-.0
		.2	-.9	967	1212	.2	-.8	26	5					
40'	40.00									.2	.7	-.0	.0	-.0
		-.1	.2	967	1149	-.1	.2	-41	-10					
50'	50.00									.3	.4	-.0	.0	.0
		.3	.4	870	980	.3	.4	10	-6					
TOP	59.00									0.0	0.0	0.0	0.0	0.0

TABLE 7. SHEAR AND MOMENT DIAGRAMS : 1999 BROADWAY CHURCH, TOWER IN PLACE
WIND DIRECTION 250 CONFIGURATION A REFERENCE PRESSURE 22.0 PSF GUST FACTOR 1.32

FLOOR	HEIGHT	FORCE (KIPS) X	FORCE (KIPS) Y	AREA (SQ FT) X	AREA (SQ FT) Y	PRESSURE (PSF) X	PRESSURE (PSF) Y	ECCEN (FT) X	ECCEN (FT) Y	SHEAR (KIPS) X	SHEAR (KIPS) Y	MOMENT (1000-FT-KIPS) X	MOMENT (1000-FT-KIPS) Y	MOMENT (1000-FT-KIPS) Z
0'	0.00									-.0	-11.8	.2	-.0	-.1
		.4	-3.9	967	1257	.4	-3.1	9	1					
10'	10.00									-.4	-7.9	.1	-.0	-.1
		.3	-3.1	967	1257	.3	-2.4	9	1					
20'	20.00									-.8	-4.9	.1	-.0	-.1
		-.1	-2.0	967	1255	-.1	-1.6	8	-0					
30'	30.00									-.7	-2.8	.0	-.0	-.0
		-.3	-2.1	967	1212	-.3	-1.7	11	-2					
40'	40.00									-.4	-.8	.0	-.0	-.0
		-.5	-.7	967	1149	-.5	-.6	12	-9					
50'	50.00									.1	-.0	.0	.0	.0
		.1	-.0	870	980	.1	-.0	-1	-2					
TOP	59.00									0.0	0.0	0.0	0.0	0.0

TABLE 7. SHEAR AND MOMENT DIAGRAMS : 1999 BROADWAY CHURCH, TOWER IN PLACE
WIND DIRECTION 260 CONFIGURATION A REFERENCE PRESSURE 22.0 PSF GUST FACTOR 1.32

FLOOR	HEIGHT	FORCE (KIPS) X	FORCE (KIPS) Y	AREA (SQ FT) X	AREA (SQ FT) Y	PRESSURE (PSF) X	PRESSURE (PSF) Y	ECCEN (FT) X	ECCEN (FT) Y	SHEAR (KIPS) X	SHEAR (KIPS) Y	MOMENT (1000-FT-KIPS) X	MOMENT (1000-FT-KIPS) Y	MOMENT (1000-FT-KIPS) Z
0'	0.00									-6.6	-12.0	.2	-.2	.1
		-.9	-4.1	967	1257	-.9	-3.2	2	-1					
10'	10.00									-5.7	-8.0	.1	-.1	.1
		-1.2	-3.0	967	1257	-1.3	-2.4	-2	1					
20'	20.00									-4.5	-4.9	.1	-.1	.1
		-1.6	-1.9	967	1255	-1.6	-1.5	-11	9					
30'	30.00									-2.9	-3.0	.0	-.0	.1
		-1.7	-2.0	967	1212	-1.7	-1.7	-8	7					
40'	40.00									-1.2	-1.0	.0	-.0	.0
		-1.0	-.8	967	1149	-1.0	-.7	-9	10					
50'	50.00									-.3	-.2	.0	-.0	.0
		-.3	-.2	870	980	-.3	-.2	-15	27					
TOP	59.00									0.0	0.0	0.0	0.0	0.0

TABLE 7. SHEAR AND MOMENT DIAGRAMS : 1999 BROADWAY CHURCH, TOWER IN PLACE
WIND DIRECTION 270 CONFIGURATION A REFERENCE PRESSURE 22.0 PSF GUST FACTOR 1.32

FLOOR	HEIGHT	FORCE (KIPS) X	FORCE (KIPS) Y	AREA (SQ FT) X	AREA (SQ FT) Y	PRESSURE (PSF) X	PRESSURE (PSF) Y	ECCEN (FT) X	ECCEN (FT) Y	SHEAR (KIPS) X	SHEAR (KIPS) Y	MOMENT (1000-FT-KIPS) X	MOMENT (1000-FT-KIPS) Y	MOMENT (1000-FT-KIPS) Z
0'	0.00									-4.3	-15.5	.4	-.1	-.0
		-.8	-3.9	967	1257	-.8	-3.1	3	-1					
10'	10.00									-3.5	-11.6	2	-.1	-.0
		-.9	-3.4	967	1257	-.9	-2.7	2	-0					
20'	20.00									-2.7	-8.2	.1	-.0	-.0
		-1.1	-2.7	967	1235	-1.1	-2.2	-3	1					
30'	30.00									-1.5	-5.5	.1	-.0	-.0
		-.9	-2.8	967	1212	-.9	-2.3	1	-0					
40'	40.00									-.7	-2.7	.0	-.0	-.0
		-.6	-1.8	967	1149	-.7	-1.6	4	-1					
50'	50.00									-.0	-.9	.0	-.0	-.0
		-.0	-.9	870	980	-.0	-.9	14	-0					
TOP	59.00									0.0	0.0	0.0	0.0	0.0

TABLE 7. SHEAR AND MOMENT DIAGRAMS : 1999 BROADWAY CHURCH, TOWER IN PLACE
WIND DIRECTION 280 CONFIGURATION A REFERENCE PRESSURE 22.0 PSF GUST FACTOR 1.32

FLOOR	HEIGHT	FORCE (KIPS) X	FORCE (KIPS) Y	AREA (SQ FT) X	AREA (SQ FT) Y	PRESSURE (PSF) X	PRESSURE (PSF) Y	ECCEN (FT) X	ECCEN (FT) Y	SHEAR (KIPS) X	SHEAR (KIPS) Y	MOMENT (1000-FT-KIPS) X	MOMENT (1000-FT-KIPS) Y	MOMENT (1000-FT-KIPS) Z
0'	0.00									-.4	-26.4	.7	.0	-.2
		-.6	-4.4	967	1257	-.6	-3.5	4	-1					
10'	10.00									.1	-22.0	.5	.0	-.2
		-.3	-4.9	967	1257	-.3	-3.9	10	-1					
20'	20.00									.4	-17.1	.3	.0	-.2
		.1	-5.1	967	1255	.1	-4.0	9	0					
30'	30.00									.3	-12.0	.2	.0	-.1
		.3	-4.9	967	1212	.3	-4.1	7	0					
40'	40.00									.0	-7.1	.1	.0	-.1
		-.3	-4.2	967	1149	-.3	-3.6	11	-1					
50'	50.00									.4	-2.9	.0	.0	-.0
		.4	-2.9	870	980	.4	-3.0	15	2					
TOP	59.00									0.0	0.0	0.0	0.0	0.0

TABLE 7. SHEAR AND MOMENT DIAGRAMS : 1999 BROADWAY CHURCH, TOWER IN PLACE
WIND DIRECTION 290 CONFIGURATION A REFERENCE PRESSURE 22.0 PSF GUST FACTOR 1.32

FLOOR	HEIGHT	FORCE (KIPS) X	FORCE (KIPS) Y	AREA (SQ FT) X	AREA (SQ FT) Y	PRESSURE (PSF) X	PRESSURE (PSF) Y	ECCEN (FT) X	ECCEN (FT) Y	SHEAR (KIPS) X	SHEAR (KIPS) Y	MOMENT (1000-FT-KIPS) X	MOMENT (1000-FT-KIPS) Y	MOMENT (1000-FT-KIPS) Z
0'	0.00									-3.7	-44.2	1.3	-.1	-.4
		-1.4	-6.2	967	1257	-1.4	-5.0	0	-0					
10'	10.00									-2.4	-38.0	.9	-.0	-.4
		-1.2	-7.8	967	1257	-1.3	-6.2	11	-2					
20'	20.00									-1.1	-30.2	.5	-.0	-.3
		-.1	-8.9	967	1255	-.1	-7.1	11	-0					
30'	30.00									-1.0	-21.3	.3	-.0	-.2
		.1	-8.8	967	1212	.1	-7.2	3	0					
40'	40.00									-1.1	-12.5	.1	-.0	-.2
		-1.0	-7.8	967	1149	-1.0	-6.8	10	-1					
50'	50.00									-.1	-4.8	.0	-.0	-.1
		-.1	-4.8	870	980	-.2	-4.9	17	-0					
TOP	59.00									0.0	0.0	0.0	0.0	0.0

TABLE 7. SHEAR AND MOMENT DIAGRAMS : 1999 BROADWAY CHURCH, TOWER IN PLACE
WIND DIRECTION 300 CONFIGURATION A REFERENCE PRESSURE 22.0 PSF GUST FACTOR 1.32

FLOOR	HEIGHT	FORCE (KIPS) X	FORCE (KIPS) Y	AREA (SQ FT) X	AREA (SQ FT) Y	PRESSURE (PSF) X	PRESSURE (PSF) Y	ECCEN (FT) X	ECCEN (FT) Y	SHEAR (KIPS) X	SHEAR (KIPS) Y	MOMENT (1000-FT-KIPS) X	MOMENT (1000-FT-KIPS) Y	MOMENT (1000-FT-KIPS) Z
0'	0.00									-1.1	-57.8	1.7	.0	-.5
		-.9	-7.9	967	1257	-.9	-6.3	1	-0					
10'	10.00									-.2	-49.9	1.2	.0	-.5
		-1.2	-10.3	967	1257	-1.2	-8.2	11	-1					
20'	20.00									1.0	-39.6	.7	.0	-.4
		.5	-12.1	967	1255	.5	-9.6	11	0					
30'	30.00									.5	-27.5	.4	.0	-.2
		.6	-11.0	967	1212	.6	-9.0	4	0					
40'	40.00									-.1	-16.5	.1	.0	-.2
		-1.0	-9.6	967	1149	-1.0	-8.4	9	-1					
50'	50.00									.9	-6.9	.0	.0	-.1
		.9	-6.9	870	980	1.1	-7.0	15	2					
TOP	59.00									0.0	0.0	0.0	0.0	0.0

TABLE 7. SHEAR AND MOMENT DIAGRAMS : 1999 BROADWAY CHURCH, TOWER IN PLACE
WIND DIRECTION 310 CONFIGURATION A REFERENCE PRESSURE 22.0 PSF GUST FACTOR 1.32

FLOOR	HEIGHT	FORCE (KIPS) X	FORCE (KIPS) Y	AREA (SQ FT) X	AREA (SQ FT) Y	PRESSURE (PSF) X	PRESSURE (PSF) Y	ECCEN (FT) X	ECCEN (FT) Y	SHEAR (KIPS) X	SHEAR (KIPS) Y	MOMENT (1000-FT-KIPS) X	MOMENT (1000-FT-KIPS) Y	MOMENT (1000-FT-KIPS) Z
0'	0.00									7.1	-40.5	1.1	.2	-.3
		.9	-6.0	967	1257	.9	-4.8	3	0					
10'	10.00									6.2	-34.6	.8	.2	-.3
		.4	-7.7	967	1257	.4	-6.2	11	1					
20'	20.00									5.9	-26.8	.5	.1	-.2
		1.8	-8.4	967	1255	1.8	-6.7	10	2					
30'	30.00									4.1	-18.4	.2	.1	-.2
		1.6	-7.7	967	1212	1.6	-6.4	4	1					
40'	40.00									2.5	-10.6	.1	.0	-.1
		.7	-6.8	967	1149	.7	-5.9	8	1					
50'	50.00									1.9	-3.9	.0	.0	-.1
		1.9	-3.9	870	980	2.1	-4.0	13	6					
TOP	59.00									0.0	0.0	0.0	0.0	0.0

TABLE 7. SHEAR AND MOMENT DIAGRAMS : 1999 BROADWAY CHURCH, TOWER IN PLACE
WIND DIRECTION 320 CONFIGURATION A REFERENCE PRESSURE 22.0 PSF GUST FACTOR 1.32

FLOOR	HEIGHT	FORCE (KIPS) X	FORCE (KIPS) Y	AREA (SQ FT) X	AREA (SQ FT) Y	PRESSURE (PSF) X	PRESSURE (PSF) Y	ECCEN (FT) X	ECCEN (FT) Y	SHEAR (KIPS) X	SHEAR (KIPS) Y	MOMENT (1000-FT-KIPS) X	MOMENT (1000-FT-KIPS) Y	MOMENT (1000-FT-KIPS) Z
0'	0.00									13.6	-30.8	.8	.4	-.2
		2.4	-4.2	967	1257	2.5	-3.3	-4	-2					
10'	10.00									11.2	-26.6	.5	.3	-.2
		1.7	-7.1	967	1257	1.8	-5.7	11	3					
20'	20.00									9.4	-19.4	.3	.2	-.1
		3.1	-7.9	967	1255	3.2	-6.3	6	3					
30'	30.00									6.3	-11.5	.1	.1	-.0
		2.3	-5.6	967	1212	2.3	-4.6	-4	-2					
40'	40.00									4.1	-5.9	.0	.0	-.1
		1.3	-4.3	967	1149	1.3	-3.7	9	3					
50'	50.00									2.8	-1.6	.0	.0	-.0
		2.8	-1.6	870	980	3.2	-1.6	2	4					
TOP	59.00									0.0	0.0	0.0	0.0	0.0

TABLE 7. SHEAR AND MOMENT DIAGRAMS : 1999 BROADWAY CHURCH, TOWER IN PLACE
WIND DIRECTION 330 CONFIGURATION A REFERENCE PRESSURE 22.0 PSF GUST FACTOR 1.32

FLOOR	HEIGHT	FORCE (KIPS) X	FORCE (KIPS) Y	AREA (SQ FT) X	AREA (SQ FT) Y	PRESSURE (PSF) X	PRESSURE (PSF) Y	ECCEN (FT) X	ECCEN (FT) Y	SHEAR (KIPS) X	SHEAR (KIPS) Y	MOMENT (1000-FT-KIPS) X	MOMENT (1000-FT-KIPS) Y	MOMENT (1000-FT-KIPS) Z
0'	0.00									17 3	-34.8	.9	.5	-.3
		3.0	-5.1	967	1257	3.1	-4.0	-0	-0					
10'	10.00									14.3	-29.7	.6	.4	-.3
		2.1	-7.7	967	1257	2.2	-6.2	14	4					
20'	20.00									12.1	-22.0	.3	.2	-.2
		3.8	-8.7	967	1255	3.9	-6.9	9	4					
30'	30.00									8.3	-13.3	.1	.1	-.1
		2.8	-6.6	967	1212	2.9	-5.4	-1	-1					
40'	40.00									5.5	-6.7	.0	.1	-.1
		1.5	-4.9	967	1149	1.5	-4.3	11	3					
50'	50.00									4.1	-1.7	.0	.0	-.0
		4.1	-1.7	870	980	4.7	-1.8	2	6					
TOP	59.00									0.0	0.0	0.0	0.0	0.0

TABLE 7. SHEAR AND MOMENT DIAGRAMS : 1999 BROADWAY CHURCH, TOWER IN PLACE
WIND DIRECTION 340 CONFIGURATION A REFERENCE PRESSURE 22.0 PSF GUST FACTOR 1.32

FLOOR	HEIGHT	FORCE (KIPS) X	FORCE (KIPS) Y	AREA (SQ FT) X	AREA (SQ FT) Y	PRESSURE (PSF) X	PRESSURE (PSF) Y	ECCEN (FT) X	ECCEN (FT) Y	SHEAR (KIPS) X	SHEAR (KIPS) Y	MOMENT (1000-FT-KIPS) X	MOMENT (1000-FT-KIPS) Y	MOMENT (1000-FT-KIPS) Z
0'	0.00									23.5	-35.1	.9	.7	-.1
		4.5	-5.3	967	1257	4.7	-4.2	-3	-2					
10'	10.00									19.0	-29.9	.6	.5	-.2
		3.1	-8.0	967	1257	3.3	-6.4	9	3					
20'	20.00									15.8	-21.8	.3	.3	-.1
		5.3	-8.8	967	1255	5.5	-7.0	6	4					
30'	30.00									10.6	-13.0	.1	.2	-.0
		3.9	-6.9	967	1212	4.1	-5.7	-3	-2					
40'	40.00									6.6	-6.1	.0	.1	-.0
		2.2	-4.8	967	1149	2.3	-4.2	8	4					
50'	50.00									4.4	-1.3	.0	.0	.0
		4.4	-1.3	870	980	5.1	-1.3	-1	-3					
TOP	59.00									0.0	0.0	0.0	0.0	0.0

TABLE 7. SHEAR AND MOMENT DIAGRAMS : 1999 BROADWAY CHURCH, TOWER IN PLACE
WIND DIRECTION 350 CONFIGURATION A REFERENCE PRESSURE 22.0 PSF GUST FACTOR 1.32

FLOOR	HEIGHT	FORCE (KIPS) X	FORCE (KIPS) Y	AREA (SQ FT) X	AREA (SQ FT) Y	PRESSURE (PSF) X	PRESSURE (PSF) Y	ECCEN (FT) X	ECCEN (FT) Y	SHEAR (KIPS) X	SHEAR (KIPS) Y	MOMENT (1000-FT-KIPS) X	MOMENT (1000-FT-KIPS) Y	MOMENT (1000-FT-KIPS) Z
0'	0.00									25.9	-26.4	.7	.8	-.3
		4.8	-4.0	967	1257	4.9	-3.2	2	2					
10'	10.00									21.1	-22.4	.5	.5	-.2
		3.5	-5.4	967	1257	3.7	-4.3	9	6					
20'	20.00									17.6	-17.0	.3	.3	-.2
		5.6	-6.4	967	1255	5.7	-5.1	6	5					
30'	30.00									12.0	-10.6	.1	.2	-.1
		3.8	-5.5	967	1212	3.9	-4.5	-1	-1					
40'	40.00									8.2	-5.1	.0	.1	-.1
		2.8	-3.7	967	1149	2.9	-3.3	11	8					
50'	50.00									5.5	-1.4	.0	.0	-.0
		5.5	-1.4	870	980	6.3	-1.4	2	8					
TOP	59.00									0.0	0.0	0.0	0.0	0.0

TABLE 7. 1999 BROADWAY TOWER

PROJECT 5270 CONFIGURATION A

SCALE = 400 REF. PRESSURE = 22.0

GUST FACTOR = 1.32 STANDARD FLOOR HEIGHT = 12.50

NUMBER OF SIDES = 6 NO. OF FLOORS = 42

SIDE	ANGLE	Z-AXIS
1	0.0	2.950
2	112.5	4.070
3	180.0	.760
4	247.5	1.770
5	90.0	3.630
6	270.0	-1.830

FLOOR #	LABEL	HEIGHT-FT
1	LBBY	30.00
2	3RD	12.50
3	4TH	12.50
4	5TH	12.50
5	6TH	12.50
6	7TH	12.50
7	8TH	12.50
8	9TH	12.50
9	10TH	12.50
10	11TH	12.50
11	12TH	12.50
12	14TH	12.50
13	15TH	12.50
14	16TH	12.50
15	17TH	12.50
16	18TH	12.50
17	19TH	12.50
18	20TH	12.50
19	21ST	12.50
20	22ND	12.50
21	23RD	12.50
22	24TH	12.50
23	25TH	12.50
24	26TH	12.50
25	27TH	12.50
26	28TH	12.50
27	29TH	12.50
28	30TH	12.50
29	31ST	12.50
30	32ND	12.50
31	33RD	12.50
32	34TH	12.50
33	35TH	12.50
34	36TH	12.50
35	37TH	12.50
36	38TH	12.50
37	39TH	12.50
38	40TH	12.50
39	41ST	12.50
40	42ND	12.50
41	43RD	12.50
42	PARA	17.00

TABLE 7. 1999 BROADWAY CHURCH, TOWER NOT IN PLACE

PROJECT 5271 CONFIGURATION B
SCALE = 400 REF. PRESSURE = 22.0
GUST FACTOR = 1.32 STANDARD FLOOR HEIGHT = 10.00
NUMBER OF SIDES = 4 NO. OF FLOORS = 6

SIDE	ANGLE	Z-AXIS
1	270.0	1.800
2	0.0	1.400
3	90.0	2.000
4	180.0	1.550

FLOOR #	LABEL	HEIGHT-FT
1	0'	10.00
2	10'	10.00
3	20'	10.00
4	30'	10.00
5	40'	10.00
6	50'	9.00

TABLE 7. 1999 BROADWAY CHURCH, TOWER IN PLACE

PROJECT 5271 CONFIGURATION A
SCALE = 400 REF. PRESSURE = 22.0
GUST FACTOR = 1.32 STANDARD FLOOR HEIGHT = 10.00
NUMBER OF SIDES = 4 NO. OF FLOORS = 6

SIDE	ANGLE	Z-AXIS
1	270.0	1.800
2	0.0	1.400
3	90.0	2.000
4	180.0	1.550

FLOOR #	LABEL	HEIGHT-FT
1	0'	10.00
2	10'	10.00
3	20'	10.00
4	30'	10.00
5	40'	10.00
6	50'	9.00

APPENDIX A

PRESSURE DATA

Note: Pressure coefficients are defined in Section 4.3.

Pressure tap designation is explained in Figure 3.

WD	TAP	CPMEAN	CPRMS	CPMAX	CPMIN
0	101	-.350	.169	.546	-1.020
0	102	-.333	.156	.128	-1.092
0	103	-.342	.188	.148	-1.568
0	104	.041	.157	.631	-.482
0	105	.056	.174	.544	-.576
0	106	.047	.203	.785	-.828
0	107	.072	.177	.790	-.680
0	108	.082	.150	.654	-.403
0	109	.039	.159	.653	-.582
0	110	.120	.161	.708	-.387
0	111	.149	.156	.647	-.421
0	112	.276	.179	.922	-.225
0	113	.370	.194	1.104	-.164
0	114	.374	.179	1.004	-.243
0	115	.371	.192	.975	-.250
0	116	.387	.209	1.079	-.180
0	117	.459	.204	1.129	-.228
0	118	.457	.198	1.114	-.086
0	119	.485	.207	1.195	-.022
0	120	.465	.200	1.248	-.072
0	121	.517	.190	1.236	-.050
0	122	.530	.203	1.368	-.047
0	123	.515	.210	1.225	-.157
0	124	.494	.209	1.186	-.096
0	125	.485	.185	1.093	-.095
0	126	.489	.225	1.243	-.153
0	127	.543	.217	1.216	-.149
0	128	.568	.218	1.291	-.011
0	129	.525	.195	1.115	.041
0	130	.563	.200	1.181	-.063
0	131	.522	.184	1.243	-.013
0	132	.512	.205	1.149	-.076
0	133	.507	.209	1.313	-.063
0	134	.454	.184	1.122	-.063
0	135	.455	.205	1.104	-.158
0	136	.459	.216	1.212	-.099
0	137	.504	.211	1.187	-.151
0	138	.488	.199	1.207	-.058
0	139	.508	.185	1.207	-.026
0	140	.499	.200	1.237	-.144
0	141	.508	.215	1.167	-.051
0	142	.450	.215	1.239	-.135
0	143	.316	.191	1.034	-.128
0	144	.314	.185	1.083	-.282
0	145	.333	.197	.993	-.268
0	146	.393	.208	1.147	-.140
0	147	.398	.181	1.160	-.070
0	148	.403	.188	1.169	-.171
0	149	.405	.165	1.016	-.144
0	150	.416	.190	1.183	-.187
0	151	.406	.197	1.216	-.214
0	152	.309	.183	.977	-.239
0	153	.231	.170	1.119	-.322
0	154	.272	.183	.808	-.501
0	155	.248	.165	.819	-.277
0	156	.306	.174	.973	-.264
0	157	.305	.162	.853	-.148
0	158	.312	.165	.968	-.162
0	159	.348	.180	.980	-.307
0	160	.343	.174	.970	-.175
0	161	.332	.175	.921	-.243
0	162	.247	.172	1.081	-.302
0	163	.175	.158	.840	-.404
0	164	.150	.145	.692	-.306
0	165	.171	.138	.635	-.236
0	166	.155	.137	.641	-.313
0	167	.201	.130	.675	-.189
0	168	.281	.143	.770	-.124
0	169	.279	.144	.767	-.148
0	170	.233	.134	.680	-.210
0	171	.153	.121	.664	-.284
0	172	.102	.130	.532	-.341
0	173	.065	.137	.677	-.456
0	174	-.021	.147	.530	-.504
0	175	.110	.129	.524	-.339
0	176	.193	.137	.674	-.276
0	177	.138	.135	.624	-.261
0	178	-.206	.200	.373	-1.026
0	179	-.251	.193	.484	-1.087
0	180	.095	.139	.574	-.410
0	181	.323	.173	.880	-.285
0	182	.251	.157	.894	-.220
0	183	.020	.143	.492	-.523
0	184	.185	.154	.735	-.389
0	185	.425	.192	1.211	-.092
0	186	.339	.179	1.271	-.232
0	187	.140	.138	.777	-.393
0	201	-.266	.176	.358	-.878
0	202	-.309	.187	.340	-1.026
0	203	-.301	.185	.678	-.978
0	204	-.269	.171	.317	-1.046
0	205	-.279	.192	.349	-1.025
0	206	-.287	.187	.496	-1.182
0	207	-.291	.195	.331	-1.094
0	208	-.448	.261	.207	-1.762
0	209	-.629	.314	.293	-1.884
0	210	-.604	.279	.068	-2.138
0	211	-.609	.272	.125	-1.646
0	212	-.268	.170	.189	-.955
0	213	-.258	.170	.213	-1.005
0	214	-.271	.176	.268	-1.165
0	215	-.250	.184	.277	-1.232
0	216	-.352	.191	.308	-1.162
0	217	-.582	.244	.138	-1.633
0	218	-.580	.257	.093	-1.884
0	219	-.556	.268	.037	-1.709
0	220	-.284	.179	.220	-1.146
0	221	-.261	.166	.247	-.965
0	222	-.259	.178	.426	-1.046
0	223	-.341	.205	.311	-1.259
0	224	-.455	.222	.259	-1.239
0	225	-.476	.196	.141	-1.438
0	226	-.432	.181	.170	-1.059
0	227	-.464	.192	.265	-1.275
0	228	-.291	.174	.293	-1.350
0	229	-.246	.168	.322	-.955
0	230	-.273	.192	.363	-1.066
0	231	-.324	.206	.309	-1.196
0	232	-.399	.199	.184	-1.322
0	233	-.452	.202	.209	-1.503
0	234	-.458	.192	.066	-1.404
0	235	-.407	.181	.141	-1.127
0	236	-.216	.160	.265	-.897
0	237	-.225	.185	.257	-1.127
0	238	-.239	.198	.274	-1.048
0	239	-.330	.210	.283	-1.451
0	240	-.407	.225	.229	-1.370
0	241	-.469	.205	.139	-1.513
0	242	-.455	.196	.141	-1.290
0	243	-.460	.201	.121	-1.247
0	244	-.154	.155	.249	-1.782
0	245	-.138	.139	.274	-.751
0	246	-.164	.159	.388	-.837
0	247	-.250	.180	.239	-1.101
0	248	-.433	.232	.300	-1.489
0	249	-.536	.266	.268	-1.832
0	250	-.547	.249	.072	-1.614
0	251	-.544	.245	.019	-1.905
0	252	-.175	.152	.228	-1.242
0	253	-.178	.142	.273	-.848
0	254	-.214	.170	.243	-1.136
0	255	-.237	.155	.261	-.970
0	256	-.235	.153	.245	-.785
0	257	-.360	.242	.332	-1.741
0	258	-.535	.333	.276	-2.079
0	259	-.640	.355	.189	-2.916
0	260	-.167	.145	.285	-.712
0	261	-.177	.147	.316	-.737
0	262	-.187	.151	.283	-.875
0	263	-.206	.158	.296	-1.040

WD	TAP	CPMEAN	CPRMS	CPMAX	CPMIN
0	264	-.203	.152	.260	-.749
0	265	-.212	.147	.210	-.762
0	266	-.189	.158	.298	-.821
0	267	-.177	.143	.321	-.986
0	268	-.200	.138	.243	-.693
0	269	-.166	.142	.346	-.793
0	270	-.216	.155	.180	-.902
0	271	-.224	.148	.231	-.751
0	272	-.708	.374	.058	-2.622
0	301	-.287	.150	.167	-1.176
0	302	-.299	.165	.233	-.987
0	303	-.318	.181	.204	-.983
0	304	-.315	.186	.268	-1.212
0	305	-.319	.182	.252	-1.315
0	306	-.328	.187	.231	-1.261
0	307	-.303	.155	.241	-1.066
0	308	-.288	.159	.178	-1.006
0	309	-.307	.167	.238	-1.130
0	310	-.307	.173	.216	-1.292
0	311	-.321	.182	.251	-1.275
0	312	-.331	.187	.241	-1.089
0	313	-.323	.179	.186	-1.458
0	314	-.299	.152	.159	-1.064
0	315	-.314	.176	.193	-1.126
0	316	-.334	.179	.240	-1.371
0	317	-.328	.174	.240	-1.116
0	318	-.332	.177	.162	-1.163
0	319	-.296	.151	.245	-1.367
0	320	-.301	.161	.178	-1.209
0	321	-.313	.163	.174	-1.066
0	322	-.300	.172	.305	-1.253
0	323	-.300	.172	.180	-1.465
0	324	-.301	.173	.162	-1.078
0	325	-.298	.146	.141	-.933
0	326	-.276	.157	.184	-1.199
0	327	-.299	.164	.209	-1.550
0	328	-.280	.156	.265	-.887
0	329	-.291	.171	.197	-.999
0	330	-.326	.176	.193	-1.126
0	331	-.240	.150	.197	-.844
0	332	-.219	.149	.315	-.864
0	333	-.226	.166	.178	-1.595
0	334	-.238	.111	.028	-.628
0	335	-.245	.150	.214	-.945
0	336	-.269	.187	.253	-1.062
0	337	-.182	.148	.288	-.817
0	338	-.158	.150	.328	-1.236
0	339	-.174	.144	.290	-.775
0	340	-.167	.154	.319	-.952
0	341	-.183	.154	.323	-.774

WD	TAP	CPMEAN	CPRMS	CPMAX	CPMIN
0	342	-.181	.152	.292	-.825
0	343	-.134	.145	.276	-.667
0	344	-.128	.136	.294	-.730
0	345	-.127	.122	.262	-.632
0	346	-.139	.133	.357	-.696
0	347	-.161	.151	.260	-.832
0	348	-.165	.139	.332	-.824
0	349	-.128	.129	.245	-.617
0	350	-.110	.124	.199	-.530
0	351	-.121	.122	.235	-.592
0	352	-.138	.130	.249	-.663
0	353	-.137	.134	.287	-.788
0	354	-.147	.137	.264	-.688
0	355	-.108	.128	.303	-.752
0	356	-.123	.131	.293	-.615
0	357	-.135	.138	.291	-.611
0	358	-.124	.133	.361	-.615
0	401	-.321	.162	.721	-.946
0	402	-.322	.164	.200	-.900
0	403	-.269	.160	.223	-1.020
0	404	-.221	.141	.272	-.733
0	405	-.227	.148	.322	-.810
0	406	-.230	.132	.225	-.791
0	407	-.255	.140	.147	-.979
0	408	-.275	.135	.151	-.744
0	409	-.273	.140	.173	-.921
0	410	-.269	.139	.188	-.806
0	411	-.275	.150	.278	-.972
0	412	-.217	.132	.155	-.718
0	413	-.212	.121	.155	-.659
0	414	-.223	.127	.244	-.656
0	415	-.240	.137	.186	-.719
0	416	-.257	.131	.279	-.789
0	417	-.251	.121	.116	-.646
0	418	-.277	.137	.166	-.855
0	419	-.303	.159	.244	-1.050
0	420	-.230	.138	.196	-.744
0	421	-.241	.126	.173	-.740
0	422	-.253	.127	.186	-.670
0	423	-.274	.137	.182	-.803
0	424	-.267	.136	.161	-.820
0	425	-.285	.137	.091	-.931
0	426	-.306	.155	.227	-1.051
0	427	-.328	.163	.186	-1.325
0	428	-.294	.139	.136	-.822
0	429	-.297	.152	.140	-.781
0	430	-.311	.147	.111	-.878
0	431	-.328	.162	.293	-1.308
0	432	-.308	.148	.266	-1.040
0	433	-.297	.143	.159	-.820

WD	TAP	CPMEAN	CPRMS	CPMAX	CPMIN
0	434	-.309	.152	.145	-.894
0	435	-.310	.153	.105	-1.218
0	436	-.359	.182	.140	-1.247
0	437	-.380	.167	.093	-1.026
0	438	-.371	.164	.177	-.985
0	439	-.398	.178	.077	-1.475
0	440	-.346	.165	.159	-.981
0	441	-.272	.158	.283	-1.001
0	442	-.268	.157	.138	-.838
0	443	-.249	.155	.237	-.855
0	444	-.401	.195	.104	-1.394
0	445	-.417	.191	.081	-1.801
0	446	-.446	.204	.319	-1.396
0	447	-.384	.185	.161	-1.230
0	448	-.237	.166	.253	-.957
0	449	-.191	.154	.257	-.797
0	450	-.162	.155	.273	-.727
0	451	-.183	.157	.288	-.814
0	452	-.490	.256	.166	-1.758
0	453	-.397	.250	.250	-1.853
0	454	-.249	.178	.250	-1.019
0	455	-.179	.153	.246	-.785
0	456	-.177	.146	.263	-.826
0	457	-.146	.131	.313	-.741
0	458	-.127	.136	.352	-.698
0	459	-.134	.139	.265	-.609
0	460	-.163	.152	.449	-.704
0	461	-.182	.150	.235	-.663
0	462	-.194	.153	.291	-.912
0	463	-.173	.138	.328	-.707
0	464	-.141	.129	.322	-.601
0	465	-.142	.133	.324	-1.110
0	466	-.181	.165	.289	-.709
0	467	-.182	.143	.203	-.827
0	468	-.176	.128	.239	-.603
0	469	-.163	.138	.278	-.665
0	470	-.155	.144	.299	-.667
0	471	-.150	.145	.428	-.617
0	472	-.497	.267	.124	-2.021
0	501	-.014	.330	.820	-1.775
0	502	.067	.250	.794	-.875
0	503	.082	.145	.548	-.466
0	504	-.041	.129	.396	-.511
0	505	-.033	.372	1.112	-1.530
0	506	-.032	.365	1.004	-1.147
0	507	.105	.160	.660	-.603
0	508	-.024	.141	.534	-.503
0	509	-.230	.340	.766	-1.493
0	510	-.175	.363	.807	-1.236
0	511	-.016	.220	.609	-1.145

WD	TAP	CPMEAN	CPRMS	CPMAX	CPMIN
0	512	-.079	.151	.451	-.890
0	513	-.332	.343	.808	-1.619
0	514	-.339	.332	.611	-1.516
0	515	-.102	.244	.574	-1.228
0	516	-.146	.162	.327	-.948
0	517	-.368	.310	.847	-1.509
0	518	-.400	.341	.756	-1.528
0	519	-.141	.237	.404	-1.162
0	520	-.179	.170	.400	-.994
0	521	-.305	.301	.716	-1.530
0	522	-.281	.323	.572	-1.516
0	523	-.174	.248	.494	-1.500
0	524	-.187	.188	.397	-1.382
0	525	-.258	.258	.407	-1.654
0	526	-.235	.251	.561	-1.824
0	527	-.060	.189	.550	-1.058
0	528	-.091	.183	.555	-.771
0	529	-.260	.197	.440	-1.027
0	530	-.202	.174	.391	-.833
0	531	-.429	.256	.235	-1.509
0	532	-.160	.152	.413	-.738
0	533	-.002	.146	.480	-.522
0	534	-.160	.167	.347	-.893
0	601	.171	.209	.949	-.453
0	602	.302	.215	1.080	-.283
0	603	.416	.211	1.053	-.195
0	604	.425	.228	1.442	-.241
0	605	.156	.213	1.003	-.501
0	606	.416	.231	1.245	-.335
0	607	.563	.226	1.259	-.251
0	608	.574	.233	1.695	-.504
0	609	.112	.175	.777	-.425
0	610	.337	.202	1.036	-.227
0	611	.495	.234	1.223	-.350
0	612	.483	.252	1.221	-.663
0	613	.081	.182	.767	-.494
0	614	.295	.205	1.061	-.254
0	615	.457	.234	1.246	-.477
0	616	.463	.209	1.449	-.293
0	617	.029	.184	.671	-.608
0	618	.206	.196	.871	-.519
0	619	.368	.213	1.054	-.391
0	620	.367	.241	1.246	-.936
0	621	-.052	.163	.539	-.775
0	622	.144	.204	.887	-.554
0	623	.219	.225	1.176	-.702
0	624	.253	.245	.996	-.813
0	625	-.148	.185	.574	-.947
0	626	-.013	.151	.462	-.634
0	627	-.018	.183	.556	-.759

WD	TAP	CPMEAN	CPRMS	CPMAX	CPMIN
0	628	-.001	.212	.721	-.846
0	629	-.114	.163	.650	-.792
0	630	-.207	.166	.416	-.771
0	631	-.189	.153	.343	-.750
0	632	-.252	.203	.376	-.919
0	633	.095	.141	.625	-.375
0	634	-.140	.236	.654	-.953
0	801	-.127	.133	.285	-.600
0	802	-.127	.139	.343	-.713
0	803	.235	.151	.777	-.285
0	804	-.162	.145	.291	-.646
0	805	-.038	.146	.431	-.537
0	806	-.173	.173	.512	-.754
0	807	-.325	.191	.122	-1.195
0	808	-.342	.183	.366	-.978
0	809	-.213	.165	.297	-1.001
0	810	-.274	.215	.393	-1.349
0	811	-.171	.159	.308	-.704
0	812	-.241	.178	.362	-.999
0	813	-.249	.198	.395	-1.005
0	814	-.166	.206	.499	-1.234
0	815	-.259	.169	.343	-.832
0	901	-.268	.184	.303	-1.120
0	902	-.287	.181	.228	-1.306
0	903	-.286	.168	.237	-1.077
0	904	-.147	.196	.392	-1.311
0	905	-.294	.169	.166	-1.051
0	906	-.294	.179	.214	-1.678
0	907	-.296	.162	.228	-1.195
0	908	-.315	.158	.203	-.883
0	909	-.282	.172	.267	-.965
0	910	-.338	.165	.223	-1.429
0	911	-.329	.167	.150	-1.552
0	912	-.339	.168	.192	-1.154
0	913	-.355	.157	.239	-1.118
0	914	-.353	.157	.230	-.922
0	915	-.332	.175	.137	-1.109
0	916	-.359	.173	.207	-1.040
0	917	-.444	.229	.328	-1.534
0	918	-.652	.252	.043	-1.721
0	919	-.386	.210	.155	-1.338
0	920	-.301	.188	.287	-1.170
0	921	-.404	.199	.142	-1.657
0	1101	.184	.132	.609	-.221
0	1102	.188	.164	.823	-.487
0	1103	.189	.136	.589	-.511
0	1104	.032	.141	.510	-.484
0	1105	.050	.130	.547	-.498
0	1106	.014	.152	.604	-.556
0	1107	.153	.165	.692	-.374

WD	TAP	CPMEAN	CPRMS	CPMAX	CPMIN
0	1108	.152	.149	.809	-.334
0	1109	.152	.141	.713	-.486
0	1110	.149	.140	.613	-.254
0	1111	.151	.129	.572	-.243
0	1112	.081	.161	.655	-.542
0	1113	.141	.171	.709	-.403
0	1114	.170	.160	.846	-.343
0	1115	.158	.130	.682	-.256
0	1116	.132	.129	.539	-.351
0	1117	.116	.121	.512	-.312
0	1118	.091	.133	.470	-.365
0	1119	.104	.137	.576	-.393
0	1120	.070	.183	.645	-.596
0	1121	.146	.124	.726	-.251
0	1122	.157	.124	.648	-.222
0	1123	.143	.127	.562	-.323
0	1124	.097	.151	.560	-.582
0	1125	.162	.132	.737	-.339
0	1126	.128	.128	.525	-.313
0	1201	.122	.136	.553	-.384
0	1202	.048	.150	.556	-.825
0	1203	.133	.151	.652	-.543
0	1204	.151	.135	.607	-.409
0	1205	.061	.153	.611	-.917
0	1206	.155	.170	.878	-.362
0	1207	.202	.152	.655	-.557
0	1208	.264	.158	.874	-.223
0	1209	.293	.145	.962	-.124
0	1210	.152	.130	.598	-.259
0	1211	.261	.156	.934	-.157
0	1212	.103	.132	.614	-.354
0	1213	.005	.127	.456	-.530
0	1214	.059	.155	.723	-.410
0	1215	.299	.161	.907	-.124
0	1216	.311	.155	.931	-.196
0	1217	.161	.141	.653	-.262
0	1218	.164	.132	.607	-.281
0	1219	.092	.124	.556	-.337
0	1220	.208	.150	.722	-.201
0	1221	.326	.172	1.006	-.170
0	1222	.172	.132	.631	-.196
0	1223	.104	.121	.541	-.313
0	1224	.255	.153	1.035	-.123
0	1225	.420	.199	1.257	-.062
0	1226	.342	.184	1.026	-.141
0	1227	.203	.142	.595	-.279
0	1228	.116	.126	.551	-.265
0	1229	.167	.128	.627	-.549
0	1301	.059	.142	.567	-.593
0	1302	.056	.146	.529	-.358

WD	TAP	CPMEAN	CPRMS	CPMAX	CPMIN
0	1303	.081	.147	.620	-.425
0	1304	.026	.134	.445	-.501
0	1305	.186	.140	.669	-.224
0	1306	.171	.122	.652	-.189
0	1307	.123	.140	.607	-.545
0	1308	.012	.146	.596	-.498
0	1309	.019	.137	.482	-.541
0	1311	.207	.146	.843	-.288
0	1312	.191	.141	.767	-.192
0	1313	.100	.128	.552	-.313
0	1314	.028	.129	.581	-.393
0	1315	.317	.158	1.112	-.076
0	1316	.272	.151	.938	-.206
0	1317	.105	.136	.513	-.358
0	1318	.236	.139	.849	-.149
0	1319	.166	.117	.605	-.193
0	1320	.123	.136	.552	-.355
0	1321	.067	.127	.473	-.333
0	1322	.140	.124	.576	-.271
0	1323	.309	.160	.999	-.118
0	1324	.171	.122	.634	-.197
0	1325	.108	.120	.512	-.333
0	1326	.168	.136	.572	-.314
0	1327	.128	.129	.613	-.273
0	1328	.135	.148	.760	-.432
0	1329	.400	.179	1.209	-.143
0	1330	.083	.157	.533	-.606
0	1331	.137	.143	.678	-.325
0	1401	.093	.136	.546	-.469
0	1402	.099	.147	.751	-.428
0	1403	.086	.136	.441	-.374
0	1404	.047	.121	.427	-.347
0	1405	.090	.135	.653	-.619
0	1406	.065	.143	.582	-.450
0	1407	.061	.124	.429	-.370
0	1408	.090	.128	.648	-.403
0	1409	.114	.193	.697	-.569
0	1410	.157	.186	.985	-.525
0	1411	.104	.140	.605	-.513
0	1412	.110	.129	.556	-.326
0	1413	.105	.125	.544	-.394
0	1414	.120	.172	.709	-.513
0	1415	.189	.183	.883	-.308
0	1416	.097	.127	.490	-.347
0	1417	.128	.124	.549	-.289
0	1418	.119	.140	.608	-.315
0	1419	.104	.118	.484	-.309
0	1420	.091	.132	.499	-.342
0	1421	.085	.135	.635	-.405
0	1422	.126	.125	.534	-.422

WD	TAP	CPMEAN	CPRMS	CPMAX	CPMIN
0	1423	.123	.120	.612	-.323
0	1424	.118	.131	.564	-.305
0	1425	.140	.145	.692	-.293
0	1426	.136	.137	.685	-.272
0	1427	.138	.123	.663	-.322
0	1428	.148	.143	.814	-.249
0	1429	.153	.141	.627	-.351
0	1430	.163	.138	.668	-.233
0	1431	.153	.129	.702	-.269
0	1432	.152	.121	.614	-.208
0	1433	.129	.139	.570	-.362
0	1434	.107	.129	.524	-.322
0	1435	.085	.132	.471	-.396
0	1901	.131	.137	.687	-.298
0	1902	.287	.122	.941	-.129
0	1903	.469	.114	.881	.104
0	1904	.203	.138	.719	-.519
0	1905	.283	.127	.735	-.117
0	1906	.247	.143	.765	-.243
0	1907	.208	.159	.801	-.249
0	1908	.264	.171	.801	-.307
0	1909	.263	.161	.839	-.149
0	1910	.213	.138	.693	-.223
0	1911	.217	.153	.811	-.207
0	1912	.254	.170	.911	-.347
0	1913	.161	.176	.777	-.551
0	1914	.125	.125	.601	-.255
0	1915	.179	.154	.983	-.325
0	1916	.224	.159	.923	-.259
0	1917	.285	.171	.905	-.335
0	1918	.337	.178	1.208	-.137
0	1919	.257	.174	1.224	-.225
0	1920	.294	.171	1.071	-.265
0	1921	.181	.131	.585	-.235
0	1922	.229	.153	.827	-.251
0	1923	.217	.148	.805	-.295
0	1924	.295	.166	.895	-.277
0	1925	.300	.169	1.147	-.210
0	1926	.168	.132	.800	-.230
0	1927	.198	.145	.727	-.337
0	1928	.239	.161	.907	-.206
0	1929	.281	.149	.790	-.208
0	1930	.344	.176	1.056	-.194
0	1931	.304	.164	.943	-.169
0	1932	.246	.148	.905	-.192
0	1933	.166	.144	.685	-.416
0	1934	.216	.143	.695	-.428
0	1935	.256	.161	.826	-.224
0	1936	.344	.177	1.177	-.242
0	1937	.369	.179	1.236	-.143

WD	TAP	CPMEAN	CPRMS	CPMAX	CPMIN
0	1938	.404	.187	1.165	-.143
0	1939	.273	.163	1.177	-.163
0	1940	.148	.118	.572	-.268
0	1941	.171	.151	.778	-.317
0	1942	.235	.157	.874	-.183
0	1943	.317	.189	1.199	-.216
0	1944	.397	.184	1.197	-.081
0	1945	.195	.120	.588	-.194
0	1946	.221	.142	.784	-.282
0	1947	.299	.171	1.129	-.151
0	1948	.390	.208	1.254	-.147
0	1949	.396	.207	1.447	-.169
0	1950	.372	.190	1.276	-.145
0	1951	.171	.130	.627	-.252
0	1952	.193	.133	.816	-.173
0	1953	.199	.135	.715	-.223
0	1954	.310	.159	1.009	-.228
0	1955	.379	.178	1.184	-.077
0	1956	.356	.183	1.222	-.111
0	1957	.210	.139	.657	-.209
0	1958	.338	.178	1.226	-.320
0	1959	.408	.208	1.552	-.129
0	1960	.398	.185	1.306	-.183
0	1961	.384	.180	1.361	-.111
0	1962	.254	.154	.898	-.145
0	1963	.232	.167	.983	-.300
0	1964	.126	.126	.739	-.272
0	1965	.183	.150	.816	-.294
0	1966	.275	.161	.957	-.185
0	1967	.373	.211	1.811	-.193
0	1968	.372	.181	1.441	-.113
10	101	-.335	.221	.651	-1.235
10	102	-.283	.164	.365	-.990
10	103	-.276	.145	.193	-.992
10	104	.044	.178	.606	-.792
10	105	.024	.161	.619	-.504
10	106	-.066	.209	.710	-.743
10	107	-.051	.243	.856	-.924
10	108	.129	.188	.757	-.649
10	109	.107	.161	.644	-.417
10	110	.178	.171	.758	-.410
10	111	.223	.183	.872	-.451
10	112	.338	.180	1.032	-.325
10	113	.389	.198	1.122	-.221
10	114	.326	.169	.988	-.249
10	115	.332	.180	.962	-.210
10	116	.295	.204	.928	-.317
10	117	.379	.231	1.290	-.396
10	118	.469	.214	1.263	-.231
10	119	.507	.215	1.209	-.192

WD	TAP	CPMEAN	CPRMS	CPMAX	CPMIN
10	120	.531	.204	1.197	-.112
10	121	.549	.231	1.284	-.080
10	122	.573	.220	1.305	-.534
10	123	.496	.205	1.145	-.142
10	124	.465	.190	1.109	-.264
10	125	.466	.200	1.250	-.183
10	126	.489	.216	1.248	-.301
10	127	.434	.218	1.334	-.263
10	128	.531	.207	1.207	-.058
10	129	.563	.219	1.290	-.090
10	130	.615	.215	1.338	-.092
10	131	.564	.215	1.269	-.084
10	132	.568	.210	1.227	-.079
10	133	.488	.219	1.159	-.141
10	134	.456	.177	1.011	-.075
10	135	.472	.194	1.188	-.223
10	136	.461	.214	1.171	-.136
10	137	.441	.203	1.250	-.172
10	138	.493	.199	1.106	-.092
10	139	.528	.206	1.364	-.035
10	140	.554	.213	1.347	-.088
10	141	.565	.217	1.281	-.018
10	142	.472	.203	1.302	-.132
10	143	.396	.178	1.019	-.193
10	144	.388	.182	1.191	-.271
10	145	.384	.174	1.040	-.121
10	146	.406	.185	1.114	-.155
10	147	.393	.187	1.041	-.280
10	148	.412	.196	1.055	-.195
10	149	.461	.182	1.157	-.079
10	150	.459	.190	1.193	-.014
10	151	.478	.189	1.131	-.105
10	152	.422	.196	1.188	-.102
10	153	.257	.167	1.114	-.270
10	154	.368	.175	.916	-.153
10	155	.358	.171	1.165	-.145
10	156	.347	.184	1.119	-.183
10	157	.369	.176	.909	-.234
10	158	.380	.174	1.041	-.193
10	159	.403	.174	1.091	-.046
10	160	.425	.181	1.134	-.109
10	161	.381	.180	1.045	-.210
10	162	.366	.185	1.159	-.339
10	163	.262	.186	1.007	-.358
10	164	.230	.152	.766	-.267
10	165	.221	.136	.622	-.206
10	166	.214	.148	.844	-.356
10	167	.244	.150	.715	-.229
10	168	.316	.156	.855	-.215
10	169	.293	.152	.764	-.143
10	170	.238	.150	.842	-.316
10	171	.166	.135	.770	-.314
10	172	.118	.138	.732	-.336
10	173	.079	.152	.718	-.482
10	174	.071	.148	.589	-.402
10	175	.172	.118	.659	-.264
10	176	.202	.137	.650	-.224
10	177	.115	.135	.519	-.355
10	178	-.218	.183	.373	-1.137
10	179	-.308	.171	.207	-1.044
10	180	.140	.139	.616	-.307
10	181	.301	.158	.942	-.172
10	182	.255	.157	.912	-.182
10	183	-.024	.141	.576	-.577
10	184	.214	.140	.781	-.205
10	185	.353	.180	1.233	-.189
10	186	.288	.173	.999	-.169
10	187	.111	.143	.671	-.414
10	201	-.176	.170	.361	-.752
10	202	-.130	.177	.546	-.844
10	203	-.006	.257	.906	-.950
10	204	-.216	.141	.284	-.839
10	205	-.210	.154	.284	-.979
10	206	-.177	.165	.304	-.805
10	207	-.130	.182	.342	-1.052
10	208	-.221	.256	.465	-1.584
10	209	-.374	.393	.369	-2.275
10	210	-.617	.331	.280	-1.953
10	211	-.719	.367	.161	-2.555
10	212	-.207	.139	.185	-.825
10	213	-.178	.141	.285	-.854
10	214	-.125	.129	.296	-.762
10	215	-.083	.146	.344	-.825
10	216	-.146	.203	.407	-.984
10	217	-.553	.315	.431	-1.631
10	218	-.665	.333	.299	-2.114
10	219	-.621	.275	.170	-1.601
10	220	-.242	.168	.301	-.994
10	221	-.203	.158	.287	-1.016
10	222	-.155	.164	.337	-.984
10	223	-.199	.214	.422	-1.196
10	224	-.333	.298	.511	-1.414
10	225	-.492	.258	.401	-1.469
10	226	-.508	.210	.142	-1.302
10	227	-.474	.197	.074	-1.389
10	228	-.269	.175	.323	-.912
10	229	-.230	.167	.244	-.823
10	230	-.170	.175	.418	-.920
10	231	-.209	.222	.395	-1.255
10	232	-.329	.270	.367	-1.200
10	233	-.480	.242	.312	-1.420
10	234	-.480	.207	.172	-1.329
10	235	-.470	.207	.166	-1.314
10	236	-.200	.165	.344	-.922
10	237	-.191	.167	.395	-.996
10	238	-.169	.193	.397	-1.045
10	239	-.147	.194	.363	-1.043
10	240	-.362	.252	.303	-1.429
10	241	-.432	.243	.390	-1.702
10	242	-.481	.235	.255	-1.698
10	243	-.461	.212	.181	-1.601
10	244	-.117	.137	.299	-.808
10	245	-.102	.131	.304	-.649
10	246	-.111	.143	.291	-.847
10	247	-.152	.183	.392	-.911
10	248	-.266	.227	.293	-1.551
10	249	-.428	.267	.325	-1.397
10	250	-.483	.242	.234	-1.614
10	251	-.475	.243	.188	-2.144
10	252	-.129	.129	.319	-.556
10	253	-.126	.130	.236	-.860
10	254	-.131	.141	.462	-.698
10	255	-.173	.160	.329	-.744
10	256	-.199	.155	.400	-.758
10	257	-.273	.217	.333	-1.356
10	258	-.329	.298	.378	-2.419
10	259	-.565	.348	.236	-2.361
10	260	-.126	.131	.299	-.666
10	261	-.115	.117	.247	-.590
10	262	-.127	.137	.369	-.596
10	263	-.176	.145	.274	-.780
10	264	-.213	.150	.323	-.795
10	265	-.191	.142	.348	-.832
10	266	-.122	.138	.251	-.670
10	267	-.137	.136	.297	-.581
10	268	-.150	.125	.340	-.630
10	269	-.165	.139	.352	-.628
10	270	-.180	.146	.354	-.771
10	271	-.199	.161	.367	-.742
10	272	-.557	.369	.226	-2.364
10	301	-.244	.159	.281	-1.101
10	302	-.252	.151	.212	-.915
10	303	-.231	.145	.243	-.889
10	304	-.246	.145	.195	-.873
10	305	-.255	.159	.314	-1.231
10	306	-.253	.162	.269	-1.021
10	307	-.256	.146	.315	-.997
10	308	-.233	.147	.256	-.915
10	309	-.240	.144	.211	-.735
10	310	-.251	.143	.165	-.889

WD	TAP	CPMEAN	CPRMS	CPMAX	CPMIN
10	311	-.253	.149	.366	-.796
10	312	-.250	.143	.220	-.762
10	313	-.269	.154	.196	-.818
10	314	-.263	.135	.162	-1.062
10	315	-.244	.142	.242	-1.115
10	316	-.249	.140	.182	-.833
10	317	-.259	.159	.209	-1.164
10	318	-.263	.137	.198	-.957
10	319	-.294	.158	.205	-.944
10	320	-.302	.175	.229	-1.011
10	321	-.319	.184	.173	-1.299
10	322	-.317	.186	.173	-1.235
10	323	-.321	.178	.225	-1.474
10	324	-.329	.182	.214	-1.104
10	325	-.292	.166	.189	-1.164
10	326	-.291	.162	.176	-1.086
10	327	-.311	.176	.187	-1.929
10	328	-.310	.181	.255	-1.425
10	329	-.327	.167	.165	-1.184
10	330	-.323	.180	.202	-1.110
10	331	-.242	.153	.265	-.953
10	332	-.233	.150	.264	-.995
10	333	-.252	.161	.174	-1.361
10	334	-.231	.101	.061	-.719
10	335	-.259	.169	.306	-1.252
10	336	-.276	.166	.182	-1.123
10	337	-.156	.137	.273	-.669
10	338	-.158	.135	.233	-.682
10	339	-.152	.143	.245	-.594
10	340	-.154	.140	.253	-1.144
10	341	-.170	.149	.247	-.886
10	342	-.156	.142	.284	-.935
10	343	-.127	.139	.295	-.642
10	344	-.111	.129	.328	-.646
10	345	-.118	.125	.250	-.774
10	346	-.120	.133	.441	-.587
10	347	-.125	.144	.441	-.944
10	348	-.131	.137	.318	-.649
10	349	-.118	.131	.314	-.670
10	350	-.107	.131	.371	-.706
10	351	-.110	.133	.230	-.581
10	352	-.108	.138	.360	-.687
10	353	-.126	.127	.234	-.687
10	354	-.138	.137	.217	-.746
10	355	-.096	.145	.401	-.591
10	356	-.095	.130	.312	-.585
10	357	-.111	.133	.362	-.595
10	358	-.101	.135	.312	-.622
10	401	-.270	.141	.199	-.748
10	402	-.267	.146	.239	-.810

WD	TAP	CPMEAN	CPRMS	CPMAX	CPMIN
10	403	-.234	.141	.217	-.916
10	404	-.205	.129	.267	-.701
10	405	-.205	.136	.239	-.787
10	406	-.221	.126	.227	-.807
10	407	-.224	.125	.206	-.726
10	408	-.244	.131	.186	-.710
10	409	-.231	.132	.159	-.739
10	410	-.231	.131	.183	-1.088
10	411	-.233	.144	.254	-.724
10	412	-.203	.127	.177	-.655
10	413	-.210	.118	.170	-.617
10	414	-.206	.118	.195	-.601
10	415	-.212	.124	.332	-.708
10	416	-.215	.123	.162	-.663
10	417	-.220	.129	.219	-.796
10	418	-.246	.132	.137	-.750
10	419	-.247	.130	.138	-.829
10	420	-.209	.143	.243	-.743
10	421	-.212	.138	.227	-.686
10	422	-.217	.126	.170	-.640
10	423	-.231	.123	.223	-.615
10	424	-.243	.117	.210	-.664
10	425	-.247	.132	.148	-.819
10	426	-.266	.147	.157	-1.196
10	427	-.286	.156	.166	-1.275
10	428	-.252	.145	.179	-.820
10	429	-.259	.136	.194	-1.213
10	430	-.258	.133	.152	-.810
10	431	-.274	.138	.177	-.874
10	432	-.270	.137	.228	-1.158
10	433	-.274	.130	.142	-.704
10	434	-.285	.141	.208	-.893
10	435	-.285	.138	.164	-.783
10	436	-.304	.143	.181	-.911
10	437	-.306	.143	.192	-.834
10	438	-.318	.143	.150	-.869
10	439	-.323	.158	.128	-1.061
10	440	-.310	.137	.110	-.821
10	441	-.267	.144	.217	-.765
10	442	-.233	.138	.208	-.724
10	443	-.246	.147	.177	-.982
10	444	-.368	.172	.071	-1.192
10	445	-.375	.164	.248	-1.075
10	446	-.374	.176	.191	-1.099
10	447	-.366	.165	.146	-.938
10	448	-.302	.151	.168	-.916
10	449	-.219	.149	.241	-.831
10	450	-.173	.144	.264	-.675
10	451	-.165	.141	.284	-.776
10	452	-.601	.242	.036	-1.745

WD	TAP	CPMEAN	CPRMS	CPMAX	CPMIN
10	453	-.514	.240	.325	-1.814
10	454	-.322	.172	.188	-1.033
10	455	-.224	.140	.221	-.796
10	456	-.275	.156	.186	-.814
10	457	-.164	.157	.407	-.688
10	458	-.106	.139	.463	-.637
10	459	-.116	.143	.409	-.683
10	460	-.211	.139	.247	-.654
10	461	-.250	.141	.217	-.715
10	462	-.279	.146	.236	-.796
10	463	-.189	.158	.351	-.796
10	464	-.118	.136	.441	-.658
10	465	-.129	.138	.393	-.648
10	466	-.236	.149	.201	-.853
10	467	-.249	.141	.152	-.754
10	468	-.253	.143	.167	-.844
10	469	-.217	.143	.209	-.824
10	470	-.162	.147	.358	-.667
10	471	-.165	.177	.485	-.731
10	472	-.445	.212	.265	-1.697
10	501	-.359	.319	.631	-2.050
10	502	-.170	.284	.714	-1.334
10	503	-.001	.160	.525	-.757
10	504	-.095	.141	.451	-.555
10	505	-.372	.294	.633	-1.652
10	506	-.320	.325	.664	-1.197
10	507	-.032	.192	.493	-.944
10	508	-.093	.143	.357	-.717
10	509	-.455	.264	.600	-1.400
10	510	-.462	.303	.774	-1.539
10	511	-.177	.264	.527	-1.272
10	512	-.174	.174	.259	-1.210
10	513	-.497	.244	.281	-1.708
10	514	-.525	.292	.518	-1.544
10	515	-.241	.260	.503	-1.362
10	516	-.186	.173	.294	-1.143
10	517	-.521	.258	.478	-1.752
10	518	-.498	.288	.525	-1.849
10	519	-.210	.221	.421	-1.141
10	520	-.222	.176	.281	-1.946
10	521	-.423	.240	.314	-1.592
10	522	-.416	.296	.693	-1.557
10	523	-.220	.216	.347	-1.068
10	524	-.223	.169	.349	-1.355
10	525	-.362	.236	.720	-1.697
10	526	-.324	.235	.387	-1.469
10	527	-.092	.172	.473	-.823
10	528	-.146	.163	.471	-.750
10	529	-.309	.172	.217	-.964
10	530	-.263	.170	.435	-1.094

WD	TAP	CPMEAN	CPRMS	CPMAX	CPMIN
10	531	-.498	.233	.098	-1.422
10	532	-.217	.137	.282	-.712
10	533	-.032	.149	.454	-.694
10	534	-.202	.152	.324	-.752
10	601	.261	.203	.935	-.472
10	602	.398	.215	1.157	-.421
10	603	.398	.205	1.143	-.327
10	604	.393	.196	1.072	-.193
10	605	.259	.219	1.057	-.428
10	606	.457	.224	1.390	-.214
10	607	.512	.211	1.189	-.124
10	608	.525	.205	1.315	-.069
10	609	.212	.190	.867	-.424
10	610	.429	.207	1.069	-.270
10	611	.600	.207	1.249	-.022
10	612	.543	.201	1.210	-.310
10	613	.174	.197	.886	-.464
10	614	.371	.197	1.075	-.155
10	615	.475	.204	1.178	-.361
10	616	.476	.229	1.224	-.830
10	617	.126	.182	.831	-.428
10	618	.315	.203	1.161	-.245
10	619	.429	.191	.974	-.205
10	620	.408	.191	1.060	-.783
10	621	.089	.172	.730	-.434
10	622	.204	.170	.888	-.310
10	623	.329	.187	.983	-.333
10	624	.335	.186	.917	-.424
10	625	-.060	.167	.532	-.904
10	626	.051	.143	.631	-.548
10	627	.070	.153	.640	-.603
10	628	.097	.186	.628	-.592
10	629	-.046	.154	.518	-.640
10	630	-.129	.167	.402	-.741
10	631	-.114	.150	.402	-.781
10	632	-.155	.214	.447	-.857
10	633	.097	.127	.503	-.441
10	634	.001	.221	.678	-.849
10	801	-.109	.139	.320	-.720
10	802	-.118	.136	.423	-.672
10	803	.204	.143	.728	-.214
10	804	-.094	.146	.442	-.577
10	805	.057	.151	.543	-.575
10	806	-.092	.181	.612	-.680
10	807	-.247	.205	.308	-1.178
10	808	-.245	.177	.266	-.987
10	809	-.155	.184	.371	-.882
10	810	-.315	.210	.224	-1.246
10	811	-.221	.144	.255	-.739
10	812	-.289	.158	.240	-.920

WD	TAP	CPMEAN	CPRMS	CPMAX	CPMIN
10	813	-.315	.170	.161	-.932
10	814	-.177	.213	.465	-1.174
10	815	-.323	.172	.228	-.972
10	901	-.212	.182	.355	-1.553
10	902	-.200	.142	.276	-.805
10	903	-.200	.166	.246	-.745
10	904	.016	.157	.514	-.545
10	905	-.253	.151	.235	-.794
10	906	-.287	.205	.280	-1.476
10	907	-.267	.157	.174	-1.009
10	908	-.265	.170	.346	-1.059
10	909	-.127	.170	.393	-.792
10	910	-.349	.241	.457	-1.472
10	911	-.255	.147	.276	-.914
10	912	-.253	.159	.272	-.982
10	913	-.393	.191	.207	-1.069
10	914	-.310	.162	.223	-1.086
10	915	-.261	.138	.263	-.649
10	916	-.352	.182	.199	-1.093
10	917	-.367	.290	.529	-1.768
10	918	-.602	.275	.133	-1.649
10	919	-.281	.170	.212	-1.065
10	920	-.249	.155	.233	-.854
10	921	-.276	.173	.278	-1.112
10	1101	.241	.132	.780	-.132
10	1102	.281	.156	.834	-.308
10	1103	.246	.139	.657	-.171
10	1104	.089	.141	.603	-.333
10	1105	.105	.125	.490	-.277
10	1106	.078	.141	.659	-.568
10	1107	.224	.166	.758	-.357
10	1108	.231	.133	.726	-.165
10	1109	.207	.141	.778	-.283
10	1110	.189	.124	.670	-.257
10	1111	.143	.112	.493	-.199
10	1112	.141	.137	.581	-.318
10	1113	.227	.164	.879	-.471
10	1114	.235	.141	.771	-.268
10	1115	.204	.137	.694	-.210
10	1116	.114	.131	.685	-.333
10	1117	.136	.130	.609	-.333
10	1118	.141	.119	.544	-.244
10	1119	.171	.120	.612	-.249
10	1120	.138	.138	.644	-.331
10	1121	.179	.128	.622	-.210
10	1122	.205	.131	.619	-.185
10	1123	.210	.139	.711	-.203
10	1124	.164	.132	.589	-.410
10	1125	.209	.125	.628	-.215
10	1126	.132	.113	.517	-.256

WD	TAP	CPMEAN	CPRMS	CPMAX	CPMIN
10	1201	.067	.127	.498	-.335
10	1202	.025	.145	.593	-.543
10	1203	.070	.161	.846	-.507
10	1204	.122	.142	.549	-.602
10	1205	.030	.147	.600	-.614
10	1206	.070	.174	1.031	-.521
10	1207	.133	.167	.689	-.675
10	1208	.207	.150	.725	-.227
10	1209	.262	.149	.865	-.273
10	1210	.178	.126	.539	-.230
10	1211	.203	.129	.679	-.159
10	1212	.116	.142	.571	-.326
10	1213	.072	.131	.517	-.314
10	1214	.019	.143	.495	-.466
10	1215	.268	.156	.888	-.206
10	1216	.287	.151	.863	-.214
10	1217	.177	.118	.600	-.197
10	1218	.174	.123	.600	-.214
10	1219	.134	.120	.488	-.268
10	1220	.214	.136	.696	-.191
10	1221	.307	.158	.959	-.248
10	1222	.174	.123	.600	-.221
10	1223	.155	.126	.544	-.263
10	1224	.218	.148	1.024	-.327
10	1225	.364	.186	1.038	-.086
10	1226	.336	.169	.960	-.159
10	1227	.241	.138	.745	-.172
10	1228	.148	.132	.675	-.268
10	1229	.214	.129	.672	-.238
10	1301	.028	.122	.419	-.514
10	1302	.023	.133	.460	-.406
10	1303	.035	.139	.518	-.399
10	1304	-.003	.143	.454	-.504
10	1305	.103	.131	.572	-.470
10	1306	.110	.119	.538	-.307
10	1307	.082	.121	.517	-.342
10	1308	-.006	.124	.485	-.487
10	1309	-.026	.128	.395	-.599
10	1311	.133	.133	.527	-.258
10	1312	.129	.128	.641	-.278
10	1313	.061	.118	.484	-.404
10	1314	.011	.123	.392	-.436
10	1315	.281	.148	.981	-.170
10	1316	.281	.138	.806	-.083
10	1317	.076	.126	.675	-.413
10	1318	.179	.118	.556	-.259
10	1319	.119	.122	.523	-.338
10	1320	.086	.124	.496	-.347
10	1321	.042	.122	.534	-.373
10	1322	.109	.116	.485	-.321

WD	TAP	CPMEAN	CPRMS	CPMAX	CPMIN
10	1323	.280	.164	.861	-.229
10	1324	.129	.114	.564	-.302
10	1325	.076	.122	.526	-.370
10	1326	.130	.119	.515	-.244
10	1327	.082	.110	.457	-.248
10	1328	.100	.126	.633	-.345
10	1329	.339	.165	.990	-.061
10	1330	.102	.133	.683	-.658
10	1331	.112	.129	.682	-.277
10	1401	.088	.144	.574	-.468
10	1402	.130	.183	.749	-.481
10	1403	.065	.155	.584	-.392
10	1404	.025	.125	.436	-.470
10	1405	.126	.156	.652	-.574
10	1406	.046	.143	.505	-.538
10	1407	.038	.120	.413	-.392
10	1408	.119	.136	.620	-.337
10	1409	.202	.155	.741	-.380
10	1410	.231	.171	.813	-.421
10	1411	.113	.143	.665	-.317
10	1412	.148	.139	.630	-.271
10	1413	.137	.152	.621	-.343
10	1414	.198	.160	.655	-.387
10	1415	.280	.167	.877	-.397
10	1416	.116	.129	.605	-.231
10	1417	.135	.136	.542	-.293
10	1418	.158	.136	.711	-.339
10	1419	.123	.120	.582	-.246
10	1420	.098	.126	.645	-.318
10	1421	.059	.128	.478	-.399
10	1422	.131	.139	.585	-.330
10	1423	.132	.138	.622	-.374
10	1424	.132	.141	.563	-.305
10	1425	.157	.131	.590	-.364
10	1426	.162	.126	.612	-.320
10	1427	.164	.127	.743	-.247
10	1428	.159	.141	.740	-.283
10	1429	.171	.136	.716	-.207
10	1430	.174	.139	.755	-.193
10	1431	.199	.137	.838	-.230
10	1432	.188	.143	.657	-.264
10	1433	.152	.127	.644	-.267
10	1434	.125	.139	.605	-.330
10	1435	.088	.124	.541	-.311
10	1901	.145	.140	.657	-.272
10	1902	.275	.132	.801	-.119
10	1903	.453	.108	.903	.128
10	1904	.230	.160	.902	-.354
10	1905	.300	.126	.779	-.067
10	1906	.276	.122	.665	-.065

WD	TAP	CPMEAN	CPRMS	CPMAX	CPMIN
10	1907	.293	.150	.972	-.171
10	1908	.309	.152	1.118	-.224
10	1909	.294	.167	.915	-.209
10	1910	.233	.135	.756	-.181
10	1911	.278	.142	.695	-.134
10	1912	.311	.152	1.013	-.179
10	1913	.283	.159	.866	-.339
10	1914	.172	.148	.685	-.265
10	1915	.246	.139	.786	-.162
10	1916	.313	.145	.816	-.153
10	1917	.343	.164	.978	-.231
10	1918	.348	.170	.983	-.175
10	1919	.274	.150	.890	-.162
10	1920	.264	.157	1.093	-.179
10	1921	.238	.134	.833	-.175
10	1922	.257	.140	.650	-.211
10	1923	.302	.149	.862	-.158
10	1924	.344	.171	.838	-.328
10	1925	.304	.157	.907	-.141
10	1926	.154	.136	.737	-.298
10	1927	.230	.142	.714	-.207
10	1928	.313	.156	.993	-.151
10	1929	.319	.161	.967	-.192
10	1930	.371	.151	.952	-.077
10	1931	.287	.166	.959	-.186
10	1932	.260	.138	.797	-.188
10	1933	.221	.152	.991	-.230
10	1934	.249	.132	.776	-.154
10	1935	.294	.154	.837	-.173
10	1936	.350	.172	1.133	-.117
10	1937	.340	.166	1.184	-.075
10	1938	.362	.176	.991	-.166
10	1939	.272	.133	.884	-.088
10	1940	.170	.121	.575	-.301
10	1941	.133	.140	.616	-.318
10	1942	.189	.155	.695	-.447
10	1943	.250	.183	.831	-.473
10	1944	.318	.166	1.249	-.079
10	1945	.185	.123	.569	-.203
10	1946	.157	.146	.554	-.452
10	1947	.229	.152	.714	-.360
10	1948	.318	.192	1.136	-.352
10	1949	.351	.185	1.179	-.130
10	1950	.288	.161	.921	-.245
10	1951	.187	.128	.656	-.224
10	1952	.149	.127	.594	-.386
10	1953	.153	.129	.572	-.235
10	1954	.282	.147	.869	-.184
10	1955	.323	.163	.899	-.105
10	1956	.289	.161	1.038	-.239

WD	TAP	CPMEAN	CPRMS	CPMAX	CPMIN
10	1957	.191	.143	.812	-.295
10	1958	.286	.153	.859	-.207
10	1959	.355	.185	1.115	-.132
10	1960	.340	.177	1.151	-.126
10	1961	.340	.156	1.081	-.066
10	1962	.189	.151	.814	-.382
10	1963	.167	.132	.645	-.194
10	1964	.118	.120	.551	-.243
10	1965	.158	.134	.666	-.248
10	1966	.254	.149	.803	-.451
10	1967	.319	.189	1.149	-.307
10	1968	.309	.162	1.510	-.183
20	101	-.232	.303	.719	-1.269
20	102	-.286	.194	.892	-1.107
20	103	-.265	.148	.251	-.962
20	104	.118	.159	.677	-.484
20	105	.080	.153	.596	-.558
20	106	-.116	.147	.419	-.922
20	107	-.223	.187	.482	-.780
20	108	-.025	.213	.813	-.807
20	109	.085	.188	.798	-.569
20	110	.179	.174	1.042	-.415
20	111	.269	.175	1.036	-.334
20	112	.368	.183	1.179	-.323
20	113	.399	.188	1.017	-.217
20	114	.298	.175	.831	-.218
20	115	.288	.166	.876	-.217
20	116	.179	.161	.681	-.478
20	117	.072	.166	.728	-.419
20	118	.268	.233	1.123	-.449
20	119	.421	.227	1.197	-.251
20	120	.528	.235	1.356	-.332
20	121	.536	.222	1.271	-.069
20	122	.562	.225	1.439	-.141
20	123	.457	.199	1.246	-.182
20	124	.377	.184	.955	-.186
20	125	.390	.181	1.094	-.103
20	126	.357	.180	1.015	-.129
20	127	.301	.180	.890	-.265
20	128	.323	.187	1.019	-.294
20	129	.421	.219	1.366	-.220
20	130	.505	.239	1.259	-.320
20	131	.515	.210	1.250	-.133
20	132	.511	.218	1.277	-.169
20	133	.454	.208	1.411	-.254
20	134	.386	.172	1.003	-.260
20	135	.382	.176	.999	-.125
20	136	.329	.162	.939	-.227
20	137	.269	.156	.854	-.178
20	138	.323	.191	1.099	-.247

WD	TAP	CPMEAN	CPRMS	CPMAX	CPMIN	WD	TAP	CPMEAN	CPRMS	CPMAX	CPMIN	WD	TAP	CPMEAN	CPRMS	CPMAX	CPMIN
20	139	.407	.234	1.404	-.262	20	202	-.107	.162	.496	-.641	20	252	-.117	.124	.220	-.624
20	140	.426	.205	1.288	-.171	20	203	.210	.233	.947	-.658	20	253	-.096	.125	.328	-.497
20	141	.486	.211	1.192	-.174	20	204	-.142	.114	.267	-.544	20	254	-.046	.123	.304	-.445
20	142	.507	.224	1.317	-.225	20	205	-.091	.131	.357	-.576	20	255	-.050	.149	.408	-.728
20	143	.377	.191	1.050	-.309	20	206	-.048	.136	.365	-.714	20	256	-.071	.152	.359	-.565
20	144	.347	.168	.885	-.169	20	207	.016	.129	.426	-.614	20	257	-.045	.173	.470	-.707
20	145	.346	.168	.941	-.171	20	208	.007	.141	.444	-.811	20	258	-.121	.215	.413	-1.883
20	146	.334	.162	.799	-.151	20	209	-.006	.203	.533	-1.476	20	259	-.286	.283	.374	-1.598
20	147	.284	.186	.994	-.670	20	210	-.219	.241	.551	-1.130	20	260	-.113	.130	.310	-.642
20	148	.290	.178	.974	-.305	20	211	-.297	.263	.375	-1.501	20	261	-.093	.130	.304	-.594
20	149	.375	.186	1.110	-.223	20	212	-.158	.129	.319	-.614	20	262	-.053	.129	.356	-.695
20	150	.415	.195	1.137	-.096	20	213	-.105	.122	.339	-.462	20	263	-.080	.138	.373	-.601
20	151	.438	.187	1.170	-.269	20	214	-.033	.117	.310	-.434	20	264	-.107	.148	.418	-.655
20	152	.398	.190	1.186	-.231	20	215	.036	.121	.477	-.312	20	265	-.131	.176	.567	-.836
20	153	.300	.203	.988	-.317	20	216	.067	.141	.600	-.546	20	266	-.026	.117	.336	-.503
20	154	.299	.160	1.034	-.485	20	217	-.079	.280	.536	-1.211	20	267	-.034	.130	.388	-.553
20	155	.324	.160	.890	-.223	20	218	-.313	.298	.714	-1.562	20	268	-.030	.144	.442	-.490
20	156	.243	.147	.863	-.360	20	219	-.328	.274	.824	-1.412	20	269	-.072	.142	.502	-.568
20	157	.264	.155	.774	-.229	20	220	-.159	.126	.252	-.667	20	270	-.097	.147	.487	-.583
20	158	.271	.155	.786	-.271	20	221	-.112	.125	.327	-.660	20	271	-.116	.135	.282	-.635
20	159	.290	.160	.928	-.223	20	222	-.031	.122	.392	-.538	20	272	-.250	.276	.453	-2.074
20	160	.342	.177	1.055	-.200	20	223	.013	.150	.430	-.898	20	301	-.208	.126	.223	-.712
20	161	.371	.199	1.084	-.296	20	224	.007	.222	.533	-1.112	20	302	-.205	.134	.285	-.682
20	162	.345	.179	.994	-.280	20	225	-.132	.302	.576	-1.070	20	303	-.192	.129	.207	-.636
20	163	.236	.161	.895	-.336	20	226	-.273	.259	.716	-1.170	20	304	-.194	.125	.238	-.656
20	164	.205	.138	.679	-.254	20	227	-.295	.227	.565	-1.097	20	305	-.218	.133	.207	-.821
20	165	.217	.134	.688	-.296	20	228	-.188	.126	.227	-.654	20	306	-.223	.133	.296	-.678
20	166	.200	.140	.723	-.367	20	229	-.140	.124	.260	-.593	20	307	-.211	.127	.217	-.840
20	167	.207	.143	.826	-.245	20	230	-.047	.125	.346	-.564	20	308	-.200	.125	.300	-.604
20	168	.236	.155	.774	-.265	20	231	.005	.145	.457	-.766	20	309	-.200	.128	.210	-.735
20	169	.205	.152	.745	-.218	20	232	-.013	.211	.479	-1.143	20	310	-.209	.128	.223	-.617
20	170	.158	.147	.654	-.469	20	233	-.122	.306	.616	-1.309	20	311	-.205	.124	.260	-.713
20	171	.119	.141	.599	-.400	20	234	-.278	.260	.636	-1.208	20	312	-.216	.123	.213	-.637
20	172	.115	.144	.667	-.402	20	235	-.257	.251	.862	-1.021	20	313	-.208	.119	.267	-.698
20	173	.068	.138	.535	-.426	20	236	-.176	.130	.292	-.774	20	314	-.203	.132	.278	-.589
20	174	.137	.144	.638	-.477	20	237	-.130	.136	.310	-.661	20	315	-.207	.121	.162	-.631
20	175	.169	.126	.628	-.324	20	238	-.053	.125	.343	-.556	20	316	-.202	.110	.186	-.574
20	176	.185	.138	.794	-.229	20	239	-.010	.142	.475	-.779	20	317	-.220	.130	.206	-.768
20	177	.083	.126	.515	-.596	20	240	-.019	.206	.422	-1.175	20	318	-.225	.121	.140	-.703
20	178	-.199	.167	.295	-.900	20	241	-.133	.266	.527	-1.125	20	319	-.217	.137	.197	-.875
20	179	-.310	.160	.250	-1.067	20	242	-.260	.251	.556	-1.850	20	320	-.219	.127	.176	-.728
20	180	.160	.138	.569	-.331	20	243	-.250	.243	.728	-1.311	20	321	-.224	.132	.145	-.709
20	181	.231	.147	.759	-.242	20	244	-.114	.128	.388	-.596	20	322	-.215	.132	.167	-.696
20	182	.196	.152	.776	-.240	20	245	-.082	.120	.345	-.513	20	323	-.226	.143	.238	-.803
20	183	-.051	.153	.449	-.670	20	246	-.053	.122	.308	-.469	20	324	-.230	.134	.212	-.728
20	184	.187	.130	.701	-.201	20	247	-.020	.140	.442	-.586	20	325	-.241	.131	.167	-1.033
20	185	.258	.155	.884	-.236	20	248	-.039	.184	.444	-.855	20	326	-.242	.141	.191	-1.082
20	186	.196	.152	.938	-.232	20	249	-.121	.237	.449	-1.192	20	327	-.250	.151	.226	-1.175
20	187	.071	.139	.632	-.512	20	250	-.248	.236	.695	-1.604	20	328	-.260	.157	.204	-1.063
20	201	-.027	.153	.466	-.560	20	251	-.260	.236	.626	-1.257	20	329	-.246	.154	.175	-1.116

WD	TAP	CPMEAN	CPRMS	CPMAX	CPMIN	WD	TAP	CPMEAN	CPRMS	CPMAX	CPMIN	WD	TAP	CPMEAN	CPRMS	CPMAX	CPMIN
20	330	-.239	.146	.204	-.959	20	422	-.205	.126	.192	-.604	20	472	-.342	.164	.162	-1.073
20	331	-.248	.135	.164	-.848	20	423	-.220	.137	.218	-.738	20	501	-.503	.269	.405	-1.834
20	332	-.246	.141	.243	-.864	20	424	-.221	.121	.169	-.626	20	502	-.374	.239	.570	-1.477
20	333	-.250	.158	.232	-.968	20	425	-.208	.123	.236	-.659	20	503	-.106	.150	.294	-.805
20	334	-.256	.091	.071	-.547	20	426	-.215	.125	.242	-.600	20	504	-.138	.131	.310	-.750
20	335	-.250	.157	.167	-1.280	20	427	-.218	.127	.253	-.693	20	505	-.498	.228	.418	-1.739
20	336	-.253	.152	.154	-1.012	20	428	-.232	.136	.212	-.911	20	506	-.467	.268	.451	-1.585
20	337	-.181	.147	.278	-.801	20	429	-.227	.146	.194	-.782	20	507	-.165	.206	.364	-1.092
20	338	-.185	.138	.263	-.700	20	430	-.224	.131	.238	-.702	20	508	-.158	.166	.284	-.730
20	339	-.167	.137	.241	-.733	20	431	-.245	.123	.123	-.743	20	509	-.500	.230	.232	-1.709
20	340	-.161	.132	.252	-.611	20	432	-.243	.128	.234	-.669	20	510	-.550	.236	.190	-1.570
20	341	-.170	.128	.312	-.676	20	433	-.233	.138	.210	-.673	20	511	-.283	.250	.440	-1.298
20	342	-.162	.131	.269	-.589	20	434	-.236	.129	.190	-.829	20	512	-.211	.189	.260	-1.298
20	343	-.148	.131	.300	-.885	20	435	-.234	.130	.175	-.680	20	513	-.557	.230	.242	-1.405
20	344	-.147	.134	.286	-.693	20	436	-.269	.143	.181	-.940	20	514	-.527	.260	.349	-1.724
20	345	-.159	.140	.268	-.825	20	437	-.273	.149	.141	-.797	20	515	-.281	.239	.273	-1.242
20	346	-.139	.130	.281	-.624	20	438	-.287	.137	.149	-.805	20	516	-.229	.190	.275	-1.238
20	347	-.136	.133	.251	-.710	20	439	-.291	.142	.166	-1.310	20	517	-.580	.249	.383	-1.758
20	348	-.152	.148	.312	-.684	20	440	-.264	.128	.151	-.686	20	518	-.544	.256	.409	-1.522
20	349	-.145	.138	.321	-.963	20	441	-.247	.124	.184	-.747	20	519	-.258	.210	.307	-1.047
20	350	-.115	.133	.353	-.590	20	442	-.232	.125	.203	-.624	20	520	-.231	.163	.310	-.962
20	351	-.126	.137	.343	-.738	20	443	-.232	.128	.181	-.708	20	521	-.471	.234	.338	-2.112
20	352	-.123	.126	.270	-.633	20	444	-.303	.134	.103	-.908	20	522	-.464	.276	.372	-1.329
20	353	-.125	.136	.285	-.814	20	445	-.309	.132	.062	-.906	20	523	-.261	.198	.275	-1.221
20	354	-.138	.141	.365	-.650	20	446	-.327	.150	.201	-1.049	20	524	-.261	.172	.352	-1.093
20	355	-.124	.138	.277	-.633	20	447	-.310	.139	.132	-.769	20	525	-.420	.232	.255	-1.307
20	356	-.111	.126	.290	-.490	20	448	-.303	.143	.130	-.821	20	526	-.324	.229	.422	-1.245
20	357	-.110	.140	.341	-.691	20	449	-.220	.136	.236	-.819	20	527	-.101	.163	.547	-.848
20	358	-.099	.132	.399	-.721	20	450	-.187	.134	.295	-.697	20	528	-.145	.141	.468	-.844
20	401	-.258	.145	.169	-.833	20	451	-.190	.126	.231	-.691	20	529	-.335	.179	.186	-1.161
20	402	-.249	.146	.199	-.781	20	452	-.458	.221	.162	-1.631	20	530	-.264	.152	.330	-.843
20	403	-.201	.126	.253	-.697	20	453	-.426	.205	.093	-1.587	20	531	-.453	.207	.261	-1.494
20	404	-.206	.130	.208	-.782	20	454	-.328	.167	.166	-1.244	20	532	-.243	.130	.279	-.667
20	405	-.199	.126	.238	-.619	20	455	-.281	.144	.188	-.780	20	533	-.035	.150	.418	-.550
20	406	-.211	.137	.294	-.702	20	456	-.322	.145	.238	-.840	20	534	-.226	.145	.244	-.820
20	407	-.211	.121	.149	-.630	20	457	-.174	.166	.368	-.704	20	601	.433	.230	1.339	-.208
20	408	-.221	.144	.262	-.697	20	458	-.124	.134	.320	-.559	20	602	.456	.210	1.188	-.217
20	409	-.219	.140	.270	-.861	20	459	-.129	.137	.225	-.630	20	603	.411	.207	1.158	-.215
20	410	-.210	.126	.145	-.693	20	460	-.257	.136	.150	-.719	20	604	.325	.190	1.101	-.314
20	411	-.200	.139	.201	-.779	20	461	-.274	.127	.161	-.663	20	605	.423	.228	1.247	-.273
20	412	-.206	.130	.212	-.671	20	462	-.308	.142	.268	-.751	20	606	.574	.223	1.472	-.054
20	413	-.215	.124	.227	-.610	20	463	-.182	.153	.373	-.755	20	607	.495	.199	1.171	-.067
20	414	-.202	.117	.136	-.617	20	464	-.120	.142	.390	-.678	20	608	.451	.190	1.014	-.100
20	415	-.201	.123	.171	-.613	20	465	-.119	.138	.341	-.702	20	609	.371	.202	1.048	-.178
20	416	-.211	.135	.212	-.650	20	466	-.282	.134	.158	-.820	20	610	.515	.198	1.283	-.008
20	417	-.209	.118	.175	-.597	20	467	-.273	.124	.159	-.667	20	611	.526	.201	1.356	-.098
20	418	-.207	.128	.192	-.585	20	468	-.274	.127	.113	-.696	20	612	.498	.194	1.095	-.057
20	419	-.203	.122	.164	-.636	20	469	-.235	.151	.343	-.674	20	613	.312	.191	.943	-.281
20	420	-.215	.142	.255	-.781	20	470	-.158	.156	.373	-.672	20	614	.446	.193	1.087	-.245
20	421	-.210	.133	.210	-.790	20	471	-.148	.160	.459	-.743	20	615	.467	.199	1.117	-.087

WD	TAP	CPMEAN	CPRMS	CPMAX	CPMIN
20	616	.454	.193	1.177	-.126
20	617	.258	.184	.880	-.341
20	618	.376	.192	1.029	-.369
20	619	.440	.174	1.095	-.057
20	620	.356	.166	1.068	-.128
20	621	.217	.168	.930	-.356
20	622	.283	.157	.970	-.180
20	623	.359	.171	.942	-.122
20	624	.323	.172	.940	-.167
20	625	.088	.154	.696	-.468
20	626	.138	.138	.647	-.369
20	627	.144	.134	.574	-.382
20	628	.175	.152	.666	-.617
20	629	.038	.156	.662	-.460
20	630	.025	.166	.604	-.507
20	631	.002	.161	.675	-.510
20	632	.041	.184	.587	-.876
20	633	.143	.143	.706	-.380
20	634	.115	.197	.761	-.996
20	801	-.108	.130	.363	-.675
20	802	-.129	.138	.445	-.630
20	803	.161	.136	.725	-.296
20	804	.017	.147	.471	-.432
20	805	.119	.123	.593	-.316
20	806	.064	.168	.503	-.690
20	807	-.043	.155	.451	-.671
20	808	-.055	.163	.473	-.656
20	809	.006	.153	.578	-.663
20	810	-.321	.206	.277	-1.449
20	811	-.229	.130	.188	-.809
20	812	-.300	.143	.212	-.775
20	813	-.357	.163	.160	-.966
20	814	-.203	.196	.372	-.975
20	815	-.275	.156	.132	-.846
20	901	-.192	.138	.278	-.848
20	902	-.165	.126	.312	-.641
20	903	-.156	.134	.302	-.632
20	904	.020	.142	.451	-.458
20	905	-.208	.139	.235	-.769
20	906	-.321	.203	.231	-1.190
20	907	-.204	.136	.217	-.832
20	908	-.184	.153	.377	-.843
20	909	-.099	.151	.349	-.691
20	910	-.324	.278	.430	-1.545
20	911	-.248	.145	.200	-.906
20	912	-.199	.128	.258	-.823
20	913	-.344	.193	.289	-1.080
20	914	-.361	.182	.182	-1.105
20	915	-.245	.138	.163	-.982
20	916	-.155	.143	.298	-.816

WD	TAP	CPMEAN	CPRMS	CPMAX	CPMIN
20	917	-.063	.263	.664	-1.291
20	918	-.307	.182	.182	-1.201
20	919	-.228	.145	.191	-.792
20	920	-.212	.135	.233	-.702
20	921	-.230	.146	.321	-.800
20	1101	.193	.140	.670	-.230
20	1102	.307	.163	1.009	-.164
20	1103	.208	.116	.613	-.142
20	1104	.172	.155	.675	-.344
20	1105	.147	.152	.792	-.357
20	1106	.184	.174	.767	-.469
20	1107	.250	.150	.889	-.153
20	1108	.259	.131	.760	-.108
20	1109	.207	.159	.746	-.323
20	1110	.183	.132	.628	-.231
20	1111	.192	.133	.747	-.213
20	1112	.213	.152	.794	-.347
20	1113	.265	.151	.790	-.355
20	1114	.285	.144	.755	-.177
20	1115	.168	.154	.863	-.252
20	1116	.113	.141	.710	-.525
20	1117	.181	.132	.647	-.192
20	1118	.181	.137	.721	-.310
20	1119	.207	.135	.764	-.211
20	1120	.211	.144	.719	-.510
20	1121	.179	.117	.701	-.200
20	1122	.226	.124	.767	-.168
20	1123	.225	.121	.715	-.121
20	1124	.210	.123	.604	-.234
20	1125	.223	.136	.846	-.258
20	1126	.118	.130	.578	-.459
20	1201	-.010	.136	.393	-.610
20	1202	-.026	.155	.470	-.519
20	1203	-.002	.170	.603	-.570
20	1204	.105	.178	.619	-.558
20	1205	-.030	.162	.478	-.637
20	1206	-.006	.175	.589	-.696
20	1207	.080	.178	.636	-.878
20	1208	.177	.141	.872	-.218
20	1209	.202	.138	.715	-.225
20	1210	.175	.134	.583	-.287
20	1211	.164	.132	.752	-.178
20	1212	.141	.120	.518	-.336
20	1213	.126	.123	.540	-.429
20	1214	-.024	.133	.477	-.497
20	1215	.214	.146	.762	-.295
20	1216	.220	.147	.827	-.254
20	1217	.183	.128	.604	-.264
20	1218	.202	.134	.679	-.220
20	1219	.175	.123	.499	-.285

WD	TAP	CPMEAN	CPRMS	CPMAX	CPMIN
20	1220	.189	.116	.659	-.118
20	1221	.208	.138	.716	-.229
20	1222	.178	.124	.606	-.198
20	1223	.182	.133	.645	-.232
20	1224	.136	.141	.732	-.308
20	1225	.278	.159	1.014	-.213
20	1226	.230	.140	.647	-.188
20	1227	.218	.130	.676	-.150
20	1228	.182	.133	.638	-.213
20	1229	.229	.127	.682	-.193
20	1301	-.050	.121	.338	-.467
20	1302	-.038	.132	.352	-.547
20	1303	-.027	.136	.385	-.577
20	1304	-.051	.133	.334	-.656
20	1305	.016	.131	.433	-.450
20	1306	.039	.150	.512	-.418
20	1307	.027	.139	.488	-.455
20	1308	-.052	.139	.368	-.537
20	1309	-.091	.160	.365	-.675
20	1311	.081	.136	.818	-.345
20	1312	.048	.139	.491	-.390
20	1313	.030	.128	.523	-.502
20	1314	-.028	.126	.379	-.495
20	1315	.213	.142	.837	-.211
20	1316	.226	.145	.803	-.230
20	1317	.035	.119	.429	-.485
20	1318	.085	.125	.518	-.393
20	1319	.041	.113	.426	-.472
20	1320	.039	.119	.417	-.404
20	1321	-.001	.135	.461	-.513
20	1322	.074	.132	.714	-.517
20	1323	.221	.142	.789	-.147
20	1324	.076	.119	.512	-.307
20	1325	.036	.147	.480	-.657
20	1326	.071	.130	.516	-.447
20	1327	.052	.129	.630	-.367
20	1328	.073	.147	.816	-.387
20	1329	.275	.158	.952	-.155
20	1330	.054	.119	.497	-.298
20	1331	.054	.119	.492	-.323
20	1401	.021	.161	.580	-.529
20	1402	.062	.222	.898	-.590
20	1403	-.007	.177	.536	-.562
20	1404	-.047	.136	.373	-.580
20	1405	.027	.189	.668	-.741
20	1406	-.024	.181	.576	-.584
20	1407	-.031	.141	.480	-.475
20	1408	.083	.128	.534	-.372
20	1409	.235	.134	.808	-.233
20	1410	.224	.140	.730	-.216

WD	TAP	CPMEAN	CPRMS	CPMAX	CPMIN
20	1411	.067	.142	.647	-.325
20	1412	.072	.136	.639	-.384
20	1413	.115	.140	.595	-.392
20	1414	.239	.131	.830	-.265
20	1415	.240	.139	.705	-.174
20	1416	.064	.137	.525	-.418
20	1417	.085	.133	.480	-.301
20	1418	.130	.126	.574	-.239
20	1419	.097	.132	.703	-.387
20	1420	.065	.120	.520	-.272
20	1421	.014	.125	.473	-.359
20	1422	.059	.135	.442	-.444
20	1423	.070	.153	.592	-.461
20	1424	.073	.146	.722	-.481
20	1425	.113	.141	.587	-.343
20	1426	.134	.135	.554	-.261
20	1427	.123	.126	.636	-.348
20	1428	.123	.114	.572	-.206
20	1429	.121	.128	.563	-.281
20	1430	.131	.131	.645	-.287
20	1431	.137	.131	.682	-.287
20	1432	.161	.130	.599	-.252
20	1433	.119	.124	.572	-.309
20	1434	.047	.141	.440	-.546
20	1435	.026	.124	.420	-.394
20	1901	.096	.140	.478	-.449
20	1902	.222	.128	.683	-.217
20	1903	.459	.107	1.013	.095
20	1904	.161	.149	.811	-.487
20	1905	.288	.122	.880	-.055
20	1906	.270	.131	.776	-.133
20	1907	.265	.158	.874	-.275
20	1908	.298	.148	.838	-.188
20	1909	.280	.165	.998	-.277
20	1910	.227	.136	.710	-.155
20	1911	.260	.125	.703	-.115
20	1912	.295	.152	.807	-.166
20	1913	.288	.140	.858	-.073
20	1914	.097	.150	.636	-.545
20	1915	.239	.136	.929	-.115
20	1916	.298	.146	.982	-.193
20	1917	.311	.157	.867	-.133
20	1918	.271	.146	.838	-.146
20	1919	.223	.142	.751	-.272
20	1920	.227	.149	.834	-.199
20	1921	.196	.137	.740	-.191
20	1922	.240	.138	.778	-.208
20	1923	.278	.139	.809	-.171
20	1924	.328	.155	1.009	-.133
20	1925	.246	.145	.821	-.378

WD	TAP	CPMEAN	CPRMS	CPMAX	CPMIN
20	1926	.178	.125	.598	-.295
20	1927	.213	.137	.701	-.249
20	1928	.271	.144	.815	-.181
20	1929	.285	.150	.863	-.144
20	1930	.302	.163	.924	-.149
20	1931	.201	.159	.894	-.332
20	1932	.230	.124	.657	-.125
20	1933	.177	.150	.611	-.332
20	1934	.204	.135	.762	-.153
20	1935	.217	.145	.736	-.183
20	1936	.245	.169	.784	-.289
20	1937	.220	.154	.839	-.379
20	1938	.242	.155	.902	-.194
20	1939	.239	.132	.889	-.122
20	1940	.065	.130	.442	-.564
20	1941	.035	.152	.506	-.508
20	1942	.035	.153	.648	-.724
20	1943	.081	.181	.659	-.681
20	1944	.161	.159	.812	-.280
20	1945	.122	.140	.587	-.460
20	1946	.058	.156	.618	-.460
20	1947	.071	.179	.604	-.540
20	1948	.204	.180	.832	-.519
20	1949	.220	.153	.915	-.247
20	1950	.247	.136	.728	-.100
20	1951	.177	.121	.596	-.249
20	1952	.077	.128	.472	-.434
20	1953	.066	.127	.501	-.327
20	1954	.182	.162	.726	-.412
20	1955	.203	.168	.829	-.476
20	1956	.206	.146	.840	-.247
20	1957	.131	.153	.820	-.417
20	1958	.205	.168	.820	-.368
20	1959	.223	.162	.840	-.327
20	1960	.217	.165	.935	-.390
20	1961	.227	.139	.688	-.256
20	1962	.123	.139	.781	-.349
20	1963	.074	.119	.620	-.316
20	1964	.046	.119	.481	-.402
20	1965	.102	.138	.538	-.448
20	1966	.162	.144	.660	-.432
20	1967	.187	.167	.814	-.366
20	1968	.207	.160	1.020	-.278
30	101	.076	.317	1.226	-1.188
30	102	-.228	.215	.497	-1.039
30	103	-.266	.169	.244	-.937
30	104	.133	.153	.648	-.352
30	105	.098	.144	.556	-.422
30	106	-.095	.148	.493	-.664
30	107	-.235	.162	.405	-.825

WD	TAP	CPMEAN	CPRMS	CPMAX	CPMIN
30	108	-.205	.177	.473	-.825
30	109	-.081	.198	.667	-.751
30	110	.109	.238	1.171	-.644
30	111	.246	.194	1.121	-.524
30	112	.415	.208	1.036	-.332
30	113	.393	.199	1.163	-.264
30	114	.238	.173	.884	-.291
30	115	.203	.161	.766	-.290
30	116	.107	.147	.584	-.365
30	117	-.021	.144	.517	-.496
30	118	.042	.173	.801	-.481
30	119	.149	.236	1.248	-.459
30	120	.328	.257	1.193	-.330
30	121	.483	.255	1.313	-.371
30	122	.550	.242	1.324	-.422
30	123	.485	.230	1.230	-.415
30	124	.301	.190	1.040	-.267
30	125	.294	.167	.801	-.221
30	126	.235	.177	.833	-.377
30	127	.121	.164	.748	-.349
30	128	.143	.181	.913	-.496
30	129	.225	.206	1.134	-.353
30	130	.329	.244	1.292	-.360
30	131	.412	.239	1.192	-.241
30	132	.485	.254	1.380	-.842
30	133	.457	.231	1.367	-.279
30	134	.269	.185	1.001	-.271
30	135	.238	.175	.707	-.399
30	136	.215	.172	.789	-.541
30	137	.150	.181	.893	-.567
30	138	.156	.181	.798	-.485
30	139	.207	.204	1.015	-.491
30	140	.294	.242	1.134	-.334
30	141	.395	.253	1.302	-.489
30	142	.443	.229	1.345	-.541
30	143	.330	.224	1.155	-.470
30	144	.243	.183	.802	-.768
30	145	.240	.185	1.034	-.478
30	146	.200	.168	.993	-.411
30	147	.131	.174	.662	-.637
30	148	.160	.173	.919	-.425
30	149	.209	.198	.949	-.340
30	150	.262	.214	.980	-.359
30	151	.321	.215	1.298	-.394
30	152	.341	.215	1.112	-.342
30	153	.256	.225	1.160	-.500
30	154	.218	.178	.841	-.587
30	155	.207	.157	.874	-.429
30	156	.151	.187	.738	-.604
30	157	.145	.166	.755	-.537

WD	TAP	CPMEAN	CPRMS	CPMAX	CPMIN
30	158	.168	.162	1.002	-.357
30	159	.202	.166	.796	-.312
30	160	.225	.176	.891	-.403
30	161	.289	.205	1.272	-.399
30	162	.315	.197	1.105	-.336
30	163	.210	.212	.965	-.634
30	164	.122	.209	.772	-1.394
30	165	.123	.182	.658	-.920
30	166	.144	.155	.664	-.652
30	167	.173	.151	.755	-.435
30	168	.187	.146	.781	-.301
30	169	.153	.146	.671	-.329
30	170	.111	.154	.698	-.329
30	171	.095	.145	.638	-.399
30	172	.078	.148	.702	-.442
30	173	.052	.141	.592	-.428
30	174	.126	.143	.557	-.341
30	175	.126	.143	.625	-.413
30	176	.139	.116	.553	-.244
30	177	.057	.133	.516	-.387
30	178	-.164	.142	.307	-.716
30	179	-.342	.154	.103	-1.043
30	180	.128	.148	.593	-.361
30	181	.163	.131	.669	-.235
30	182	.109	.143	.639	-.321
30	183	-.111	.157	.402	-.648
30	184	.145	.150	.793	-.398
30	185	.180	.141	.735	-.222
30	186	.093	.149	.803	-.383
30	187	-.013	.142	.485	-.459
30	201	.075	.156	.668	-.389
30	202	-.178	.142	.390	-.632
30	203	.076	.363	1.218	-1.366
30	204	-.084	.125	.343	-.463
30	205	-.026	.132	.423	-.469
30	206	.015	.124	.488	-.419
30	207	.073	.127	.538	-.380
30	208	.073	.134	.582	-.324
30	209	.127	.166	.666	-.597
30	210	.087	.234	.703	-.658
30	211	.061	.271	.927	-1.295
30	212	-.131	.138	.293	-.574
30	213	-.045	.117	.354	-.450
30	214	.038	.134	.494	-.418
30	215	.134	.137	.595	-.315
30	216	.194	.142	.710	-.433
30	217	.236	.196	.909	-.663
30	218	.193	.296	.903	-.795
30	219	.111	.304	1.135	-.871
30	220	-.120	.126	.314	-.545
30	221	-.050	.120	.403	-.402
30	222	.054	.128	.547	-.357
30	223	.140	.138	.688	-.337
30	224	.228	.150	.747	-.344
30	225	.245	.198	.916	-1.003
30	226	.101	.327	.966	-1.086
30	227	.106	.310	.951	-.836
30	228	-.139	.130	.267	-.589
30	229	-.059	.112	.334	-.472
30	230	.042	.138	.521	-.369
30	231	.122	.134	.588	-.354
30	232	.201	.152	.681	-.363
30	233	.223	.225	.903	-.854
30	234	.143	.304	.907	-1.080
30	235	.102	.328	1.190	-1.090
30	236	-.134	.135	.362	-.571
30	237	-.061	.126	.338	-.513
30	238	.035	.131	.466	-.424
30	239	.130	.132	.562	-.346
30	240	.175	.148	.664	-.509
30	241	.156	.207	.790	-.725
30	242	.113	.294	.988	-.843
30	243	.123	.303	.924	-.797
30	244	-.120	.120	.293	-.535
30	245	-.053	.113	.258	-.476
30	246	.013	.117	.435	-.367
30	247	.080	.130	.494	-.481
30	248	.116	.144	.637	-.455
30	249	.165	.178	.786	-.618
30	250	.070	.240	.726	-.828
30	251	.021	.218	.718	-.659
30	252	-.118	.125	.287	-.589
30	253	-.065	.139	.448	-.461
30	254	.015	.129	.511	-.455
30	255	.067	.146	.515	-.429
30	256	.073	.143	.628	-.466
30	257	.111	.151	.621	-.476
30	258	.100	.163	.587	-.693
30	259	.017	.200	.621	-.943
30	260	-.105	.123	.318	-.563
30	261	-.067	.120	.360	-.428
30	262	.012	.120	.382	-.422
30	263	.048	.122	.435	-.409
30	264	.033	.164	.592	-.607
30	265	-.005	.171	.560	-.512
30	266	.047	.135	.678	-.428
30	267	.030	.123	.435	-.350
30	268	.077	.139	.516	-.383
30	269	.070	.155	.674	-.404
30	270	.038	.171	.547	-.578
30	271	.051	.160	.623	-.468
30	272	.074	.190	.773	-.726
30	301	-.199	.122	.200	-.603
30	302	-.199	.135	.225	-.647
30	303	-.202	.138	.268	-.836
30	304	-.199	.133	.238	-.672
30	305	-.230	.136	.230	-.689
30	306	-.259	.138	.225	-.820
30	307	-.210	.125	.211	-.621
30	308	-.210	.124	.228	-.613
30	309	-.203	.130	.181	-.803
30	310	-.206	.127	.157	-.623
30	311	-.210	.129	.224	-.723
30	312	-.222	.124	.215	-.697
30	313	-.219	.126	.167	-.613
30	314	-.203	.125	.202	-.643
30	315	-.195	.115	.176	-.576
30	316	-.202	.114	.174	-.576
30	317	-.199	.132	.274	-.701
30	318	-.216	.129	.226	-.652
30	319	-.201	.125	.200	-.663
30	320	-.213	.127	.241	-.624
30	321	-.203	.126	.168	-.596
30	322	-.217	.124	.185	-.691
30	323	-.207	.122	.254	-.637
30	324	-.189	.113	.161	-.580
30	325	-.205	.118	.217	-.604
30	326	-.201	.132	.196	-.619
30	327	-.214	.121	.189	-.656
30	328	-.205	.124	.215	-.609
30	329	-.220	.124	.152	-.649
30	330	-.212	.122	.170	-.706
30	331	-.220	.129	.209	-.691
30	332	-.211	.132	.260	-.762
30	333	-.215	.141	.276	-.790
30	334	-.224	.078	.032	-.519
30	335	-.211	.119	.129	-.637
30	336	-.223	.130	.228	-.771
30	337	-.204	.128	.269	-.853
30	338	-.196	.130	.226	-.639
30	339	-.199	.120	.306	-.796
30	340	-.187	.133	.176	-.727
30	341	-.190	.120	.215	-.584
30	342	-.198	.133	.273	-.703
30	343	-.184	.141	.243	-.755
30	344	-.161	.124	.194	-.655
30	345	-.186	.121	.217	-.632
30	346	-.177	.142	.258	-.748
30	347	-.179	.141	.268	-.741
30	348	-.198	.149	.313	-.878

WD	TAP	CPMEAN	CPRMS	CPMAX	CPMIN
30	349	-.152	.136	.279	-.723
30	350	-.143	.130	.235	-.664
30	351	-.147	.131	.375	-.627
30	352	-.147	.128	.289	-.643
30	353	-.154	.136	.248	-.697
30	354	-.162	.129	.205	-.618
30	355	-.146	.128	.241	-.798
30	356	-.146	.137	.309	-.743
30	357	-.147	.132	.314	-.719
30	358	-.152	.130	.338	-.601
30	401	-.304	.163	.195	-1.199
30	402	-.237	.140	.213	-.820
30	403	-.201	.132	.249	-.773
30	404	-.212	.137	.251	-.653
30	405	-.209	.134	.206	-.763
30	406	-.210	.134	.266	-.662
30	407	-.204	.120	.138	-.672
30	408	-.207	.137	.309	-.655
30	409	-.196	.138	.249	-.758
30	410	-.196	.131	.213	-.659
30	411	-.197	.127	.208	-.591
30	412	-.210	.133	.278	-.650
30	413	-.204	.124	.179	-.708
30	414	-.202	.134	.220	-.680
30	415	-.205	.133	.276	-.745
30	416	-.216	.132	.171	-.766
30	417	-.197	.119	.240	-.560
30	418	-.202	.128	.186	-.626
30	419	-.210	.132	.207	-.736
30	420	-.218	.144	.286	-.760
30	421	-.202	.138	.238	-.758
30	422	-.215	.128	.232	-.676
30	423	-.208	.126	.204	-.601
30	424	-.183	.113	.150	-.558
30	425	-.195	.128	.180	-.582
30	426	-.198	.130	.208	-.647
30	427	-.211	.123	.185	-.606
30	428	-.214	.142	.230	-.827
30	429	-.224	.139	.211	-.720
30	430	-.214	.128	.198	-.666
30	431	-.214	.128	.193	-.707
30	432	-.209	.128	.277	-.683
30	433	-.204	.137	.327	-.709
30	434	-.205	.123	.180	-.593
30	435	-.200	.118	.163	-.558
30	436	-.248	.136	.195	-.829
30	437	-.249	.135	.221	-.818
30	438	-.251	.135	.142	-.765
30	439	-.267	.124	.215	-.616
30	440	-.238	.131	.124	-.683

WD	TAP	CPMEAN	CPRMS	CPMAX	CPMIN
30	441	-.221	.123	.210	-.634
30	442	-.217	.128	.176	-.780
30	443	-.222	.131	.187	-.720
30	444	-.272	.134	.149	-.894
30	445	-.290	.144	.113	-.950
30	446	-.300	.134	.211	-.818
30	447	-.287	.140	.112	-.900
30	448	-.268	.128	.220	-.726
30	449	-.222	.140	.229	-.795
30	450	-.214	.130	.235	-.697
30	451	-.207	.134	.183	-.669
30	452	-.337	.170	.132	-1.298
30	453	-.332	.171	.127	-1.146
30	454	-.276	.143	.151	-.879
30	455	-.267	.142	.156	-.838
30	456	-.283	.138	.169	-.823
30	457	-.179	.138	.285	-.665
30	458	-.166	.139	.287	-.667
30	459	-.163	.134	.248	-.682
30	460	-.267	.128	.119	-.723
30	461	-.267	.130	.134	-.719
30	462	-.278	.141	.202	-.739
30	463	-.212	.144	.281	-.697
30	464	-.167	.137	.292	-.719
30	465	-.168	.127	.261	-.656
30	466	-.269	.129	.246	-.715
30	467	-.262	.130	.152	-.728
30	468	-.267	.139	.222	-.802
30	469	-.245	.141	.189	-.717
30	470	-.184	.136	.320	-.693
30	471	-.161	.141	.320	-.704
30	472	-.276	.146	.157	-1.051
30	501	-.574	.263	.143	-1.807
30	502	-.461	.209	.200	-1.372
30	503	-.191	.159	.298	-.865
30	504	-.179	.136	.270	-.833
30	505	-.538	.229	.123	-1.632
30	506	-.541	.232	.197	-1.447
30	507	-.258	.188	.265	-1.021
30	508	-.239	.170	.250	-.928
30	509	-.576	.243	.127	-1.570
30	510	-.548	.232	.134	-1.553
30	511	-.290	.211	.280	-1.286
30	512	-.235	.184	.425	-1.047
30	513	-.556	.232	.100	-1.805
30	514	-.539	.237	.097	-1.710
30	515	-.305	.200	.328	-1.174
30	516	-.249	.175	.265	-1.176
30	517	-.552	.230	.084	-1.854
30	518	-.543	.230	.211	-1.578

WD	TAP	CPMEAN	CPRMS	CPMAX	CPMIN
30	519	-.289	.191	.390	-1.161
30	520	-.256	.163	.261	-.881
30	521	-.571	.233	.130	-1.962
30	522	-.541	.229	.255	-1.635
30	523	-.286	.198	.357	-1.234
30	524	-.271	.161	.235	-1.158
30	525	-.418	.202	.139	-1.417
30	526	-.361	.206	.224	-1.594
30	527	-.147	.161	.298	-.983
30	528	-.170	.140	.322	-.758
30	529	-.326	.171	.154	-1.285
30	530	-.278	.141	.218	-.854
30	531	-.402	.181	.209	-1.197
30	532	-.248	.136	.152	-.739
30	533	-.119	.167	.491	-.595
30	534	-.219	.142	.220	-.785
30	601	.520	.224	1.128	-.234
30	602	.434	.211	1.250	-.234
30	603	.344	.203	1.034	-.331
30	604	.249	.167	.763	-.309
30	605	.522	.227	1.239	-.359
30	606	.530	.216	1.316	-.093
30	607	.407	.195	1.027	-.221
30	608	.370	.189	1.018	-.240
30	609	.496	.189	1.142	-.075
30	610	.504	.208	1.291	-.148
30	611	.426	.210	1.122	-.191
30	612	.381	.179	1.024	-.161
30	613	.454	.209	1.337	-.268
30	614	.474	.212	1.169	-.111
30	615	.430	.182	1.044	-.062
30	616	.351	.177	1.092	-.165
30	617	.370	.181	1.042	-.227
30	618	.407	.187	1.026	-.167
30	619	.366	.176	.954	-.124
30	620	.305	.167	.954	-.259
30	621	.306	.175	1.026	-.332
30	622	.343	.181	.961	-.178
30	623	.306	.174	1.000	-.157
30	624	.249	.158	.801	-.205
30	625	.188	.138	.762	-.312
30	626	.196	.147	.860	-.279
30	627	.200	.140	.783	-.244
30	628	.165	.141	.640	-.327
30	629	.143	.147	.638	-.345
30	630	.132	.133	.557	-.356
30	631	.116	.161	.621	-.354
30	632	.162	.134	.615	-.371
30	633	.190	.141	.728	-.242
30	634	.218	.147	.827	-.400

WD	TAP	CPMEAN	CPRMS	CPMAX	CPMIN
30	801	-.140	.123	.223	-.588
30	802	-.148	.133	.253	-.647
30	803	.122	.131	.577	-.294
30	804	.110	.123	.557	-.452
30	805	.133	.140	.669	-.353
30	806	.133	.125	.498	-.248
30	807	.077	.131	.599	-.415
30	808	.072	.126	.483	-.360
30	809	.096	.125	.503	-.439
30	810	-.304	.188	.251	-1.078
30	811	-.247	.129	.179	-.859
30	812	-.299	.151	.185	-.910
30	813	-.357	.157	.071	-1.019
30	814	-.205	.184	.509	-.908
30	815	-.271	.150	.297	-.870
30	901	-.240	.137	.227	-.769
30	902	-.174	.118	.205	-.600
30	903	-.250	.140	.190	-.821
30	904	-.042	.144	.486	-.613
30	905	-.202	.134	.296	-.672
30	906	-.422	.209	.229	-1.284
30	907	-.202	.138	.237	-.690
30	908	-.178	.142	.242	-.910
30	909	-.209	.178	.364	-.906
30	910	-.225	.277	.371	-1.903
30	911	-.257	.156	.205	-.847
30	912	-.186	.162	.331	-.841
30	913	-.216	.220	.552	-1.152
30	914	-.347	.182	.425	-1.181
30	915	-.295	.174	.259	-.936
30	916	-.151	.197	.624	-1.224
30	917	.017	.220	.705	-.742
30	918	-.213	.190	.392	-1.043
30	919	-.239	.149	.238	-.806
30	920	-.232	.148	.238	-.875
30	921	-.226	.149	.255	-1.159
30	1101	.093	.130	.523	-.429
30	1102	.298	.169	.905	-.251
30	1103	.191	.127	.851	-.256
30	1104	.265	.148	.745	-.405
30	1105	.218	.135	.830	-.169
30	1106	.247	.162	.801	-.307
30	1107	.245	.131	.736	-.176
30	1108	.246	.145	.771	-.178
30	1109	.189	.143	.739	-.325
30	1110	.169	.125	.558	-.224
30	1111	.182	.111	.532	-.159
30	1112	.238	.129	.830	-.114
30	1113	.242	.137	.846	-.162
30	1114	.242	.138	.878	-.263
30	1115	.129	.136	.603	-.258
30	1116	.115	.137	.621	-.631
30	1117	.176	.123	.544	-.240
30	1118	.204	.143	.706	-.258
30	1119	.222	.120	.589	-.151
30	1120	.236	.133	.762	-.141
30	1121	.188	.128	.702	-.249
30	1122	.232	.138	.727	-.238
30	1123	.237	.133	.767	-.270
30	1124	.220	.132	.625	-.195
30	1125	.216	.128	.790	-.240
30	1126	.081	.128	.438	-.279
30	1201	-.078	.132	.355	-.582
30	1202	-.111	.138	.359	-.640
30	1203	-.112	.166	.410	-.783
30	1204	.085	.170	.690	-.685
30	1205	-.132	.150	.353	-.787
30	1206	-.122	.168	.394	-.748
30	1207	.036	.172	.533	-.918
30	1208	.130	.141	.693	-.263
30	1209	.147	.129	.672	-.281
30	1210	.141	.130	.570	-.279
30	1211	.145	.124	.559	-.295
30	1212	.149	.120	.615	-.240
30	1213	.134	.130	.659	-.245
30	1214	-.097	.139	.370	-.538
30	1215	.156	.136	.637	-.388
30	1216	.159	.132	.671	-.224
30	1217	.164	.126	.720	-.219
30	1218	.167	.126	.584	-.176
30	1219	.150	.124	.599	-.255
30	1220	.130	.132	.575	-.258
30	1221	.135	.135	.632	-.264
30	1222	.173	.123	.606	-.205
30	1223	.188	.120	.649	-.198
30	1224	.031	.121	.485	-.336
30	1225	.173	.129	.821	-.172
30	1226	.167	.135	.601	-.314
30	1227	.188	.129	.716	-.184
30	1228	.192	.130	.652	-.169
30	1229	.230	.132	.678	-.227
30	1301	-.101	.113	.237	-.571
30	1302	-.109	.136	.410	-.510
30	1303	-.111	.146	.387	-.567
30	1304	-.147	.133	.250	-.674
30	1305	-.074	.131	.341	-.556
30	1306	-.048	.126	.377	-.492
30	1307	-.046	.121	.381	-.476
30	1308	-.127	.142	.305	-.667
30	1309	-.167	.158	.268	-.866
30	1311	-.007	.123	.497	-.381
30	1312	-.033	.124	.477	-.449
30	1313	-.057	.120	.300	-.694
30	1314	-.072	.120	.397	-.546
30	1315	.138	.136	.781	-.340
30	1316	.140	.141	.697	-.335
30	1317	-.042	.116	.416	-.402
30	1318	.009	.120	.350	-.403
30	1319	-.029	.115	.455	-.395
30	1320	-.039	.123	.316	-.544
30	1321	-.069	.133	.389	-.555
30	1322	-.014	.133	.408	-.498
30	1323	.131	.124	.585	-.355
30	1324	-.013	.118	.357	-.412
30	1325	-.026	.118	.378	-.407
30	1326	.007	.117	.400	-.357
30	1327	-.022	.118	.400	-.407
30	1328	.001	.131	.451	-.491
30	1329	.134	.138	.590	-.306
30	1330	-.025	.120	.388	-.446
30	1331	-.032	.120	.439	-.427
30	1401	-.125	.136	.405	-.589
30	1402	-.029	.174	.660	-.646
30	1403	-.144	.152	.444	-.723
30	1404	-.108	.136	.348	-.698
30	1405	-.046	.172	.519	-.715
30	1406	-.136	.143	.359	-.675
30	1407	-.100	.129	.319	-.529
30	1408	.018	.119	.492	-.370
30	1409	.201	.142	.811	-.255
30	1410	.223	.132	.679	-.183
30	1411	-.006	.136	.547	-.428
30	1412	.040	.127	.509	-.371
30	1413	.039	.127	.489	-.454
30	1414	.221	.136	.751	-.150
30	1415	.263	.143	.763	-.149
30	1416	-.003	.133	.451	-.457
30	1417	.023	.133	.557	-.342
30	1418	.083	.128	.562	-.328
30	1419	.044	.112	.441	-.302
30	1420	.010	.118	.504	-.431
30	1421	-.058	.127	.357	-.469
30	1422	-.011	.147	.515	-.497
30	1423	.001	.157	.511	-.507
30	1424	.010	.129	.435	-.419
30	1425	.048	.123	.485	-.334
30	1426	.090	.122	.517	-.275
30	1427	.079	.129	.472	-.393
30	1428	.092	.126	.572	-.279
30	1429	.097	.121	.529	-.296

WD	TAP	CPMEAN	CPRMS	CPMAX	CPMIN
30	1430	.097	.129	.603	-.334
30	1431	.120	.122	.570	-.251
30	1432	.117	.112	.510	-.231
30	1433	.046	.118	.563	-.295
30	1434	-.072	.149	.330	-.659
30	1435	-.023	.123	.366	-.419
30	1901	.083	.140	.491	-.384
30	1902	.159	.151	.651	-.588
30	1903	.433	.105	.827	.117
30	1904	.101	.154	.590	-.570
30	1905	.239	.133	.856	-.184
30	1906	.220	.144	.696	-.171
30	1907	.190	.155	.752	-.473
30	1908	.167	.154	.707	-.574
30	1909	.196	.148	.717	-.398
30	1910	.137	.136	.613	-.450
30	1911	.222	.151	.681	-.286
30	1912	.243	.137	.681	-.166
30	1913	.239	.168	1.041	-.313
30	1914	.048	.139	.586	-.392
30	1915	.185	.141	.723	-.164
30	1916	.189	.146	.773	-.480
30	1917	.243	.148	.815	-.277
30	1918	.189	.156	.976	-.220
30	1919	.181	.139	.739	-.335
30	1920	.171	.195	.654	-.140
30	1921	.123	.131	.548	-.355
30	1922	.167	.145	.779	-.263
30	1923	.193	.152	.662	-.439
30	1924	.229	.154	.737	-.277
30	1925	.193	.142	.667	-.329
30	1926	.155	.121	.702	-.350
30	1927	.130	.124	.627	-.263
30	1928	.161	.131	.582	-.352
30	1929	.190	.155	.823	-.261
30	1930	.192	.165	.796	-.285
30	1931	.116	.161	.647	-.552
30	1932	.132	.131	.493	-.290
30	1933	.087	.115	.496	-.301
30	1934	.081	.116	.500	-.420
30	1935	.097	.150	.669	-.418
30	1936	.103	.140	.585	-.314
30	1937	.108	.159	.851	-.456
30	1938	.142	.141	.678	-.378
30	1939	.128	.149	.643	-.307
30	1940	-.067	.136	.364	-.652
30	1941	-.087	.128	.444	-.601
30	1942	-.113	.124	.453	-.543
30	1943	-.123	.152	.382	-.621
30	1944	-.014	.144	.444	-.712

WD	TAP	CPMEAN	CPRMS	CPMAX	CPMIN
30	1945	-.065	.144	.356	-.785
30	1946	-.099	.139	.385	-.583
30	1947	-.079	.158	.478	-.710
30	1948	.038	.152	.582	-.507
30	1949	.135	.129	.682	-.328
30	1950	.131	.145	.807	-.428
30	1951	.117	.120	.554	-.339
30	1952	-.042	.122	.327	-.524
30	1953	-.065	.130	.346	-.594
30	1954	.051	.152	.722	-.574
30	1955	.083	.147	.590	-.406
30	1956	.115	.124	.688	-.268
30	1957	.011	.125	.507	-.487
30	1958	.070	.156	.675	-.768
30	1959	.130	.166	.661	-.401
30	1960	.120	.141	.612	-.551
30	1961	.135	.147	.820	-.281
30	1962	.026	.146	.543	-.513
30	1963	-.014	.119	.501	-.417
30	1964	-.055	.123	.371	-.458
30	1965	.030	.126	.474	-.419
30	1966	.045	.150	.670	-.602
30	1967	.080	.147	.617	-.491
30	1968	.062	.135	.586	-.390
40	101	.090	.278	1.201	-.876
40	102	-.074	.259	.667	-1.020
40	103	-.193	.166	.343	-.847
40	104	.059	.150	.630	-.486
40	105	.032	.150	.577	-.434
40	106	-.075	.157	.435	-.736
40	107	-.160	.208	.739	-1.055
40	108	-.162	.173	.527	-.828
40	109	-.158	.163	.705	-.742
40	110	-.059	.174	.630	-.611
40	111	.088	.228	.967	-.510
40	112	.298	.267	1.164	-.521
40	113	.298	.241	1.217	-.502
40	114	.110	.153	.636	-.396
40	115	.092	.148	.621	-.362
40	116	.028	.135	.573	-.436
40	117	-.061	.138	.433	-.473
40	118	-.060	.130	.444	-.604
40	119	-.022	.161	1.112	-.467
40	120	.092	.224	.868	-.513
40	121	.261	.286	1.204	-.480
40	122	.373	.304	1.392	-.455
40	123	.366	.275	1.090	-.812
40	124	.145	.171	.731	-.364
40	125	.119	.178	.726	-.609
40	126	.057	.158	.590	-.589

WD	TAP	CPMEAN	CPRMS	CPMAX	CPMIN
40	127	-.024	.148	.460	-.535
40	128	-.011	.155	.525	-.541
40	129	.007	.165	.710	-.496
40	130	.117	.213	1.011	-.516
40	131	.252	.257	1.161	-.420
40	132	.322	.295	1.308	-.427
40	133	.324	.267	1.380	-.513
40	134	.128	.163	.766	-.413
40	135	.097	.166	.619	-.511
40	136	.072	.164	.662	-.474
40	137	.002	.153	.584	-.555
40	138	-.009	.167	.508	-.690
40	139	.003	.183	.588	-.579
40	140	.098	.226	.970	-.552
40	141	.237	.266	1.052	-.550
40	142	.299	.277	1.423	-.531
40	143	.254	.238	1.191	-.613
40	144	.144	.158	.814	-.513
40	145	.107	.148	.779	-.355
40	146	.073	.154	.662	-.489
40	147	.010	.141	.526	-.466
40	148	.017	.165	.617	-.526
40	149	-.005	.172	.621	-.528
40	150	.060	.208	.799	-.474
40	151	.123	.243	.896	-.605
40	152	.199	.274	1.128	-.741
40	153	.130	.258	1.098	-.771
40	154	.081	.178	.699	-.715
40	155	.075	.178	.667	-.656
40	156	-.001	.174	.640	-.743
40	157	-.011	.168	.463	-.843
40	158	.006	.160	.591	-.789
40	159	.087	.162	.825	-.622
40	160	.151	.181	.935	-.433
40	161	.201	.207	1.091	-.528
40	162	.286	.254	1.202	-.594
40	163	.226	.250	1.120	-.622
40	164	-.110	.281	.669	-1.550
40	165	-.074	.249	.684	-1.851
40	166	-.017	.198	.504	-1.162
40	167	.100	.156	.602	-.513
40	168	.093	.162	.645	-.448
40	169	.111	.155	.731	-.455
40	170	.127	.147	.669	-.323
40	171	.089	.161	.643	-.420
40	172	.062	.160	.657	-.567
40	173	.026	.132	.552	-.439
40	174	-.008	.160	.423	-.595
40	175	.022	.139	.616	-.745
40	176	.069	.125	.564	-.367

WD	TAP	CPMEAN	CPRMS	CPMAX	CPMIN
40	177	.031	.124	.497	-.337
40	178	-.202	.137	.267	-.663
40	179	-.336	.145	.078	-.952
40	180	-.012	.166	.454	-.595
40	181	.074	.131	.520	-.332
40	182	.038	.118	.523	-.318
40	183	-.161	.135	.317	-.653
40	184	-.008	.159	.516	-.430
40	185	.086	.127	.529	-.319
40	186	-.005	.131	.520	-.394
40	187	-.086	.130	.480	-.542
40	201	.123	.164	.721	-.442
40	202	-.200	.158	.334	-.748
40	203	-.386	.396	.948	-1.581
40	204	-.051	.132	.469	-.531
40	205	.038	.138	.578	-.522
40	206	.070	.135	.541	-.370
40	207	.119	.147	.717	-.355
40	208	.123	.145	.645	-.322
40	209	.171	.142	.702	-.492
40	210	.274	.178	.858	-.416
40	211	.334	.214	.989	-.459
40	212	-.088	.129	.353	-.516
40	213	.011	.133	.464	-.416
40	214	.127	.141	.692	-.306
40	215	.248	.154	.782	-.261
40	216	.320	.163	1.041	-.313
40	217	.388	.174	1.037	-.204
40	218	.501	.221	1.203	-.252
40	219	.512	.250	1.218	-.389
40	220	-.081	.128	.308	-.529
40	221	.020	.124	.475	-.378
40	222	.150	.142	.660	-.268
40	223	.267	.152	.909	-.196
40	224	.353	.164	.943	-.119
40	225	.420	.169	1.046	-.059
40	226	.476	.213	1.118	-.416
40	227	.493	.260	1.344	-.947
40	228	-.087	.122	.362	-.601
40	229	-.003	.119	.447	-.366
40	230	.137	.130	.615	-.291
40	231	.251	.151	.734	-.194
40	232	.348	.163	.982	-.169
40	233	.397	.165	.935	-.176
40	234	.433	.229	1.202	-.234
40	235	.429	.229	1.281	-.329
40	236	-.092	.117	.334	-.507
40	237	-.002	.133	.538	-.490
40	238	.108	.126	.560	-.333
40	239	.222	.135	.704	-.163
40	240	.310	.159	.878	-.231
40	241	.324	.162	.906	-.196
40	242	.392	.205	1.161	-.453
40	243	.370	.219	1.170	-.507
40	244	-.090	.119	.266	-.553
40	245	-.012	.135	.432	-.501
40	246	.080	.123	.484	-.359
40	247	.158	.128	.605	-.243
40	248	.225	.146	.949	-.237
40	249	.265	.151	.986	-.384
40	250	.269	.181	.940	-.392
40	251	.261	.187	.896	-.446
40	252	-.099	.122	.308	-.467
40	253	-.036	.117	.365	-.442
40	254	.080	.143	.538	-.492
40	255	.161	.132	.584	-.230
40	256	.187	.135	.633	-.462
40	257	.212	.136	.638	-.288
40	258	.192	.142	.596	-.353
40	259	.178	.153	.864	-.665
40	260	-.098	.112	.311	-.496
40	261	-.038	.114	.352	-.499
40	262	.082	.114	.407	-.325
40	263	.149	.138	.641	-.227
40	264	.214	.144	.723	-.209
40	265	.187	.153	.810	-.273
40	266	.118	.127	.552	-.407
40	267	.112	.131	.637	-.303
40	268	.174	.127	.662	-.205
40	269	.219	.149	.703	-.282
40	270	.203	.144	.737	-.248
40	271	.260	.156	.737	-.262
40	272	.236	.152	.870	-.288
40	301	-.207	.131	.197	-.716
40	302	-.200	.136	.250	-.654
40	303	-.208	.135	.306	-.705
40	304	-.219	.130	.241	-.681
40	305	-.225	.142	.244	-.717
40	306	-.307	.150	.153	-1.200
40	307	-.192	.128	.214	-.576
40	308	-.198	.116	.178	-.703
40	309	-.209	.128	.220	-.659
40	310	-.207	.120	.183	-.721
40	311	-.215	.128	.279	-.612
40	312	-.226	.124	.152	-.869
40	313	-.219	.120	.207	-.652
40	314	-.204	.128	.334	-.645
40	315	-.200	.123	.312	-.612
40	316	-.218	.115	.187	-.618
40	317	-.208	.122	.178	-.630
40	318	-.216	.122	.162	-.703
40	319	-.206	.131	.223	-.596
40	320	-.211	.122	.162	-.650
40	321	-.200	.120	.249	-.623
40	322	-.200	.113	.220	-.744
40	323	-.194	.119	.245	-.594
40	324	-.204	.124	.210	-.607
40	325	-.203	.116	.172	-.574
40	326	-.198	.134	.236	-.775
40	327	-.196	.123	.305	-.601
40	328	-.207	.127	.254	-.639
40	329	-.204	.125	.181	-.710
40	330	-.210	.123	.232	-.686
40	331	-.202	.125	.272	-.677
40	332	-.206	.122	.218	-.645
40	333	-.198	.115	.172	-.732
40	334	-.192	.069	.001	-.417
40	335	-.217	.126	.267	-.905
40	336	-.208	.119	.154	-.650
40	337	-.209	.138	.254	-.826
40	338	-.194	.129	.220	-.837
40	339	-.188	.135	.285	-.835
40	340	-.198	.126	.194	-.822
40	341	-.195	.124	.194	-.681
40	342	-.208	.124	.180	-.616
40	343	-.182	.136	.372	-.694
40	344	-.173	.127	.214	-.681
40	345	-.196	.137	.297	-.759
40	346	-.219	.141	.222	-.672
40	347	-.215	.154	.239	-.858
40	348	-.207	.141	.259	-.983
40	349	-.153	.124	.215	-.699
40	350	-.138	.123	.254	-.590
40	351	-.143	.126	.271	-.633
40	352	-.135	.119	.358	-.601
40	353	-.185	.134	.235	-.775
40	354	-.199	.139	.272	-.742
40	355	-.131	.122	.292	-.635
40	356	-.136	.129	.260	-.554
40	357	-.161	.124	.288	-.678
40	358	-.143	.125	.294	-.762
40	401	-.320	.165	.193	-1.062
40	402	-.224	.130	.235	-.637
40	403	-.197	.131	.333	-.745
40	404	-.206	.131	.230	-.659
40	405	-.202	.123	.313	-.655
40	406	-.201	.136	.383	-.847
40	407	-.194	.124	.355	-.628
40	408	-.196	.127	.210	-.628
40	409	-.202	.127	.226	-.712

WD	TAP	CPMEAN	CPRMS	CPMAX	CPMIN
40	410	-.198	.124	.202	-.644
40	411	-.201	.134	.242	-.590
40	412	-.199	.127	.217	-.647
40	413	-.192	.136	.328	-.703
40	414	-.209	.126	.179	-.645
40	415	-.200	.139	.175	-.716
40	416	-.192	.118	.240	-.549
40	417	-.201	.126	.153	-.683
40	418	-.201	.126	.217	-.641
40	419	-.213	.124	.220	-.623
40	420	-.214	.138	.230	-.803
40	421	-.190	.124	.251	-.714
40	422	-.190	.112	.270	-.566
40	423	-.188	.121	.197	-.581
40	424	-.189	.122	.179	-.563
40	425	-.193	.121	.177	-.565
40	426	-.192	.134	.244	-.666
40	427	-.194	.125	.262	-.595
40	428	-.207	.136	.299	-.712
40	429	-.199	.134	.257	-.617
40	430	-.199	.121	.222	-.610
40	431	-.197	.125	.279	-.705
40	432	-.188	.116	.162	-.654
40	433	-.182	.111	.171	-.544
40	434	-.197	.117	.177	-.686
40	435	-.202	.121	.262	-.599
40	436	-.215	.130	.222	-.850
40	437	-.219	.135	.279	-.759
40	438	-.218	.126	.215	-.588
40	439	-.215	.134	.275	-.712
40	440	-.210	.116	.251	-.624
40	441	-.186	.114	.146	-.652
40	442	-.199	.120	.151	-.584
40	443	-.200	.128	.330	-.648
40	444	-.270	.131	.188	-.834
40	445	-.247	.134	.292	-.729
40	446	-.265	.127	.095	-.740
40	447	-.266	.136	.126	-.747
40	448	-.219	.126	.295	-.701
40	449	-.208	.125	.217	-.612
40	450	-.199	.121	.186	-.649
40	451	-.200	.119	.233	-.596
40	452	-.325	.172	.315	-1.147
40	453	-.316	.162	.255	-.914
40	454	-.263	.132	.155	-.798
40	455	-.261	.134	.230	-.822
40	456	-.225	.138	.168	-.761
40	457	-.167	.139	.293	-.591
40	458	-.177	.129	.231	-.672
40	459	-.173	.124	.224	-.618
40	460	-.244	.129	.181	-.755
40	461	-.244	.118	.106	-.604
40	462	-.253	.134	.183	-.653
40	463	-.164	.132	.276	-.619
40	464	-.150	.124	.227	-.545
40	465	-.140	.121	.247	-.551
40	466	-.241	.125	.162	-.746
40	467	-.235	.123	.183	-.646
40	468	-.246	.124	.075	-.676
40	469	-.221	.133	.253	-.805
40	470	-.153	.130	.288	-.586
40	471	-.128	.129	.314	-.561
40	472	-.265	.133	.142	-.730
40	501	-.516	.226	.217	-1.513
40	502	-.412	.203	.168	-1.242
40	503	-.227	.153	.272	-.931
40	504	-.210	.135	.231	-.729
40	505	-.536	.238	.088	-1.469
40	506	-.460	.225	.166	-1.360
40	507	-.268	.172	.222	-1.007
40	508	-.223	.153	.295	-.845
40	509	-.558	.224	.108	-1.518
40	510	-.481	.226	.124	-1.396
40	511	-.271	.172	.231	-1.089
40	512	-.231	.149	.248	-1.082
40	513	-.536	.232	.073	-1.560
40	514	-.507	.225	.257	-1.580
40	515	-.280	.163	.248	-.927
40	516	-.247	.162	.317	-.947
40	517	-.508	.234	.115	-1.696
40	518	-.444	.227	.301	-1.649
40	519	-.271	.157	.215	-1.091
40	520	-.223	.134	.195	-.831
40	521	-.570	.230	-.014	-1.636
40	522	-.507	.228	.224	-1.984
40	523	-.294	.164	.202	-1.144
40	524	-.275	.146	.150	-.957
40	525	-.432	.206	.088	-1.441
40	526	-.386	.185	.125	-1.233
40	527	-.195	.168	.282	-.839
40	528	-.218	.134	.215	-.739
40	529	-.327	.153	.131	-1.013
40	530	-.265	.132	.138	-.834
40	531	-.401	.164	.159	-1.115
40	532	-.239	.130	.190	-.748
40	533	-.174	.148	.434	-.706
40	534	-.231	.141	.308	-.940
40	601	.401	.244	1.149	-.945
40	602	.349	.200	1.100	-.486
40	603	.193	.165	.796	-.317
40	604	.133	.156	.633	-.364
40	605	.438	.274	1.145	-.606
40	606	.441	.225	1.265	-.475
40	607	.283	.194	1.018	-.341
40	608	.206	.180	.801	-.346
40	609	.382	.283	1.098	-1.182
40	610	.419	.247	1.018	-.519
40	611	.276	.175	1.000	-.419
40	612	.209	.175	.908	-.457
40	613	.314	.295	1.107	-.708
40	614	.331	.271	1.093	-1.025
40	615	.272	.180	.827	-.271
40	616	.202	.161	.235	-.424
40	617	.284	.241	.886	-.651
40	618	.311	.212	1.125	-.471
40	619	.248	.162	.830	-.337
40	620	.183	.167	.850	-.473
40	621	.259	.213	.836	-.663
40	622	.207	.214	.954	-.640
40	623	.291	.167	.779	-.342
40	624	.127	.155	.645	-.337
40	625	.146	.170	.619	-.526
40	626	.186	.151	.752	-.432
40	627	.155	.144	.603	-.348
40	628	.105	.157	.699	-.425
40	629	.139	.155	.733	-.455
40	630	.139	.139	.567	-.380
40	631	.155	.159	.760	-.601
40	632	.119	.134	.524	-.350
40	633	.189	.145	.708	-.383
40	634	.205	.125	.704	-.268
40	801	-.139	.113	.191	-.576
40	802	-.132	.131	.285	-.606
40	803	.062	.120	.481	-.371
40	804	.115	.137	.528	-.366
40	805	.022	.157	.620	-.473
40	806	.088	.134	.501	-.465
40	807	.093	.135	.535	-.580
40	808	.082	.127	.522	-.512
40	809	.078	.131	.510	-.458
40	810	-.332	.168	.273	-.986
40	811	-.232	.124	.141	-.706
40	812	-.292	.145	.137	-.867
40	813	-.344	.151	.112	-1.018
40	814	-.248	.180	.285	-1.120
40	815	-.252	.142	.185	-.756
40	901	-.256	.142	.212	-.803
40	902	-.181	.129	.214	-.705
40	903	-.279	.146	.205	-.849
40	904	-.041	.149	.448	-.672

UD	TAP	CPMEAN	CPRMS	CPMAX	CPMIN
40	905	-.193	.131	.282	-.738
40	906	-.402	.203	.218	-1.296
40	907	-.214	.138	.223	-.690
40	908	-.225	.152	.267	-.852
40	909	-.240	.154	.188	-.814
40	910	-.334	.276	.356	-1.383
40	911	-.290	.164	.271	-1.090
40	912	-.122	.166	.376	-.764
40	913	-.145	.209	.578	-.880
40	914	-.247	.217	.435	-1.097
40	915	-.285	.188	.363	-1.158
40	916	-.436	.359	.315	-1.747
40	917	-.071	.264	.847	-1.084
40	918	-.348	.267	.381	-1.342
40	919	-.268	.158	.306	-1.237
40	920	-.220	.143	.376	-.826
40	921	-.237	.159	.300	-.850
40	1101	-.004	.122	.519	-.340
40	1102	.277	.163	.876	-.208
40	1103	.159	.134	.703	-.275
40	1104	.216	.154	.941	-.201
40	1105	.192	.135	.744	-.172
40	1106	.184	.149	.678	-.333
40	1107	.140	.137	.648	-.251
40	1108	.186	.125	.720	-.229
40	1109	.087	.134	.601	-.305
40	1110	.087	.127	.562	-.425
40	1111	.175	.125	.712	-.258
40	1112	.238	.121	.743	-.224
40	1113	.189	.138	.612	-.241
40	1114	.218	.132	.753	-.167
40	1115	.033	.147	.576	-.393
40	1116	.054	.146	.517	-.642
40	1117	.152	.110	.536	-.194
40	1118	.218	.139	.759	-.217
40	1119	.221	.136	.722	-.232
40	1120	.195	.125	.593	-.158
40	1121	.167	.123	.569	-.196
40	1122	.215	.130	.671	-.132
40	1123	.216	.129	.704	-.229
40	1124	.151	.134	.791	-.326
40	1125	.176	.116	.622	-.181
40	1126	.033	.116	.432	-.344
40	1201	-.146	.127	.262	-.627
40	1202	-.185	.128	.268	-.691
40	1203	-.217	.170	.438	-.927
40	1204	.056	.173	.606	-.717
40	1205	-.248	.148	.235	-.961
40	1206	-.211	.170	.356	-.858
40	1207	-.021	.158	.442	-.853

UD	TAP	CPMEAN	CPRMS	CPMAX	CPMIN
40	1208	.041	.132	.479	-.382
40	1209	.086	.132	.472	-.422
40	1210	.046	.136	.435	-.391
40	1211	.083	.126	.524	-.362
40	1212	.075	.130	.486	-.310
40	1213	.004	.145	.411	-.489
40	1214	-.170	.130	.224	-.668
40	1215	.083	.120	.494	-.331
40	1216	.060	.136	.500	-.364
40	1217	.145	.122	.580	-.284
40	1218	.132	.130	.586	-.291
40	1219	.082	.135	.454	-.518
40	1220	.053	.135	.477	-.303
40	1221	.075	.129	.498	-.497
40	1222	.160	.108	.510	-.180
40	1223	.196	.127	.682	-.200
40	1224	-.011	.120	.503	-.412
40	1225	.100	.138	.576	-.303
40	1226	.020	.131	.480	-.398
40	1227	.183	.119	.576	-.213
40	1228	.225	.125	.682	-.117
40	1229	.202	.137	.699	-.390
40	1301	-.163	.115	.246	-.583
40	1302	-.185	.132	.230	-.632
40	1303	-.204	.141	.217	-.696
40	1304	-.185	.126	.308	-.996
40	1305	-.146	.118	.262	-.710
40	1306	-.132	.118	.269	-.491
40	1307	-.105	.116	.262	-.474
40	1308	-.182	.125	.222	-.624
40	1309	-.236	.146	.251	-.841
40	1311	-.091	.113	.324	-.505
40	1312	-.101	.127	.322	-.507
40	1313	-.106	.116	.256	-.548
40	1314	-.107	.109	.222	-.488
40	1315	.039	.121	.466	-.311
40	1316	.037	.139	.640	-.437
40	1317	-.102	.114	.308	-.453
40	1318	-.072	.111	.286	-.454
40	1319	-.084	.110	.255	-.549
40	1320	-.096	.112	.280	-.461
40	1321	-.114	.116	.323	-.504
40	1322	-.084	.123	.520	-.532
40	1323	.032	.128	.440	-.400
40	1324	-.077	.104	.259	-.452
40	1325	-.093	.112	.283	-.443
40	1326	-.050	.111	.350	-.412
40	1327	-.079	.117	.331	-.499
40	1328	-.074	.106	.312	-.468
40	1329	.034	.130	.529	-.443

UD	TAP	CPMEAN	CPRMS	CPMAX	CPMIN
40	1330	-.095	.115	.282	-.495
40	1331	-.110	.114	.274	-.487
40	1401	-.195	.136	.284	-.640
40	1402	-.149	.169	.408	-.720
40	1403	-.226	.131	.204	-.694
40	1404	-.184	.120	.227	-.578
40	1405	-.122	.175	.395	-.879
40	1406	-.261	.139	.128	-.867
40	1407	-.296	.140	.285	-.724
40	1408	-.050	.119	.368	-.431
40	1409	.122	.144	.689	-.358
40	1410	.179	.145	.794	-.227
40	1411	-.089	.133	.327	-.566
40	1412	-.038	.134	.434	-.422
40	1413	-.029	.150	.415	-.493
40	1414	.087	.184	.663	-.609
40	1415	.124	.148	.723	-.350
40	1416	-.098	.143	.377	-.601
40	1417	-.052	.131	.317	-.466
40	1418	.016	.119	.387	-.388
40	1419	-.003	.122	.451	-.430
40	1420	-.064	.115	.325	-.461
40	1421	-.106	.118	.308	-.501
40	1422	-.123	.164	.350	-.770
40	1423	-.086	.146	.334	-.518
40	1424	-.074	.147	.371	-.582
40	1425	-.027	.128	.500	-.485
40	1426	.026	.131	.635	-.368
40	1427	-.022	.141	.442	-.538
40	1428	.031	.127	.580	-.415
40	1429	.034	.127	.447	-.592
40	1430	.028	.128	.404	-.394
40	1431	.053	.126	.545	-.319
40	1432	.079	.116	.423	-.326
40	1433	-.012	.117	.366	-.348
40	1434	-.171	.141	.296	-.864
40	1435	-.095	.127	.366	-.651
40	1901	.015	.138	.468	-.555
40	1902	.032	.183	.534	-.861
40	1903	.388	.108	.730	.076
40	1904	.006	.168	.565	-.643
40	1905	.174	.116	.636	-.198
40	1906	.138	.125	.784	-.218
40	1907	.073	.172	.598	-.617
40	1908	.043	.182	.568	-.572
40	1909	.015	.178	.686	-.647
40	1910	-.013	.161	.570	-.615
40	1911	.173	.126	.693	-.210
40	1912	.189	.130	.707	-.139
40	1913	.086	.183	.586	-1.026

WD	TAP	CPMEAN	CPRMS	CPMAX	CPMIN
40	1914	-.082	.157	.431	-.638
40	1915	.135	.128	.598	-.237
40	1916	.065	.192	.711	-.620
40	1917	.072	.140	.623	-.558
40	1918	.040	.142	.474	-.408
40	1919	.056	.162	.689	-.431
40	1920	.108	.114	.454	-.328
40	1921	.011	.126	.479	-.458
40	1922	.050	.138	.470	-.467
40	1923	.065	.166	.634	-.453
40	1924	.079	.187	.646	-.515
40	1925	.036	.159	.506	-.526
40	1926	.102	.120	.502	-.326
40	1927	.046	.120	.463	-.290
40	1928	.070	.134	.663	-.321
40	1929	.095	.142	.630	-.353
40	1930	.102	.153	.763	-.339
40	1931	-.019	.171	.486	-.631
40	1932	.030	.166	.542	-.496
40	1933	-.004	.118	.466	-.337
40	1934	-.011	.116	.418	-.361
40	1935	-.004	.121	.376	-.415
40	1936	-.018	.141	.524	-.478
40	1937	-.020	.138	.389	-.425
40	1938	.016	.139	.564	-.452
40	1939	-.003	.143	.479	-.447
40	1940	-.149	.119	.191	-.560
40	1941	-.153	.123	.182	-.564
40	1942	-.184	.128	.255	-.721
40	1943	-.203	.136	.245	-.865
40	1944	-.117	.133	.290	-.613
40	1945	-.165	.123	.335	-.606
40	1946	-.163	.119	.221	-.544
40	1947	-.204	.138	.319	-.690
40	1948	-.038	.161	.412	-.625
40	1949	.013	.133	.415	-.478
40	1950	.011	.139	.627	-.439
40	1951	.034	.130	.501	-.370
40	1952	-.124	.120	.248	-.487
40	1953	-.141	.117	.187	-.658
40	1954	-.045	.133	.465	-.556
40	1955	.019	.141	.482	-.563
40	1956	.063	.139	.615	-.361
40	1957	-.063	.122	.494	-.430
40	1958	-.011	.144	.456	-.674
40	1959	.069	.143	.512	-.473
40	1960	.030	.136	.633	-.423
40	1961	.044	.122	.728	-.327
40	1962	-.081	.125	.539	-.468
40	1963	-.075	.108	.268	-.408
40	1964	-.112	.108	.196	-.442
40	1965	-.049	.116	.314	-.451
40	1966	-.030	.138	.358	-.588
40	1967	.020	.139	.625	-.610
40	1968	-.022	.133	.507	-.489
50	101	-.171	.150	.918	-.885
50	102	-.103	.204	.568	-.772
50	103	-.130	.153	.348	-.714
50	104	-.089	.148	.374	-.751
50	105	-.091	.139	.412	-.552
50	106	-.137	.156	.345	-1.014
50	107	-.164	.182	.572	-.907
50	108	-.154	.171	.517	-.896
50	109	-.109	.196	.570	-.745
50	110	-.086	.204	.761	-.840
50	111	-.039	.195	.887	-.732
50	112	.115	.257	1.150	-.711
50	113	.177	.269	1.203	-.612
50	114	-.049	.148	.475	-.600
50	115	-.084	.155	.419	-.594
50	116	-.105	.143	.315	-1.005
50	117	-.126	.130	.294	-.587
50	118	-.131	.131	.303	-.678
50	119	-.134	.135	.406	-.627
50	120	-.072	.157	.801	-.711
50	121	.002	.206	.919	-.561
50	122	.104	.257	1.056	-.652
50	123	.151	.291	1.225	-.663
50	124	-.049	.162	.485	-.645
50	125	-.048	.153	.441	-.631
50	126	-.085	.138	.356	-.626
50	127	-.123	.142	.292	-.658
50	128	-.137	.132	.440	-.729
50	129	-.116	.144	.475	-.560
50	130	-.082	.157	.517	-.590
50	131	-.007	.199	1.022	-.621
50	132	.100	.243	1.170	-.659
50	133	.110	.264	1.342	-.678
50	134	-.044	.141	.455	-.610
50	135	-.047	.144	.519	-.714
50	136	-.079	.146	.356	-.777
50	137	-.119	.145	.362	-.623
50	138	-.130	.143	.354	-.762
50	139	-.123	.148	.382	-.705
50	140	-.088	.156	.574	-.740
50	141	-.037	.199	.745	-.577
50	142	.044	.267	1.044	-.830
50	143	.089	.243	1.049	-.744
50	144	.008	.173	.516	-.669
50	145	-.010	.159	.618	-.557
50	146	-.070	.138	.404	-.498
50	147	-.092	.139	.338	-.676
50	148	-.114	.142	.387	-.810
50	149	-.138	.141	.349	-.834
50	150	-.156	.172	.446	-.764
50	151	-.087	.212	.734	-.713
50	152	-.038	.227	.873	-.868
50	153	-.028	.240	.898	-.828
50	154	-.113	.158	.431	-.771
50	155	-.132	.175	.492	-1.096
50	156	-.163	.184	.318	-1.020
50	157	-.157	.166	.292	-.955
50	158	-.116	.154	.325	-.705
50	159	-.042	.169	.527	-.614
50	160	.061	.198	1.117	-.724
50	161	.116	.235	.891	-.698
50	162	.200	.261	1.231	-.918
50	163	.196	.237	1.168	-.801
50	164	-.437	.323	.221	-2.159
50	165	-.342	.276	.363	-2.309
50	166	-.184	.203	.428	-1.053
50	167	-.079	.167	.525	-.769
50	168	-.020	.151	.576	-.582
50	169	-.003	.149	.536	-.538
50	170	.033	.167	.673	-.599
50	171	.033	.162	.717	-.474
50	172	.035	.156	.619	-.583
50	173	-.040	.144	.531	-.544
50	174	-.199	.165	.295	-.911
50	175	-.115	.162	.367	-.734
50	176	-.053	.135	.319	-.574
50	177	-.043	.127	.354	-.526
50	178	-.249	.154	.214	-.769
50	179	-.323	.163	.173	-1.068
50	180	-.150	.161	.367	-.859
50	181	-.044	.138	.379	-.601
50	182	-.031	.120	.440	-.448
50	183	-.186	.137	.359	-.754
50	184	-.154	.156	.313	-1.016
50	185	.006	.131	.526	-.461
50	186	-.069	.124	.354	-.469
50	187	-.136	.136	.295	-.570
50	201	.161	.177	1.028	-.360
50	202	-.298	.165	.230	-1.092
50	203	-.403	.221	.204	-1.453
50	204	-.009	.135	.433	-.458
50	205	.094	.136	.551	-.405
50	206	.102	.145	.558	-.405
50	207	.143	.150	.621	-.394
50	208	.172	.158	.785	-.509

WD	TAP	CPMEAN	CPRMS	CPMAX	CPMIN
50	209	.226	.155	.783	-.253
50	210	.351	.181	1.186	-.210
50	211	.391	.208	1.079	-.506
50	212	-.073	.130	.290	-.548
50	213	.065	.143	.736	-.429
50	214	.223	.158	.827	-.265
50	215	.335	.175	.936	-.261
50	216	.422	.184	1.093	-.115
50	217	.488	.188	1.195	-.046
50	218	.539	.218	1.289	-.086
50	219	.557	.242	1.338	-.144
50	220	-.030	.139	.405	-.515
50	221	.083	.134	.518	-.367
50	222	.245	.150	.858	-.318
50	223	.365	.158	.942	-.126
50	224	.491	.174	1.157	-.060
50	225	.517	.192	1.146	-.057
50	226	.513	.196	1.268	-.038
50	227	.468	.217	1.272	-.120
50	228	-.054	.129	.389	-.540
50	229	.070	.136	.635	-.409
50	230	.233	.152	.673	-.301
50	231	.341	.168	.911	-.161
50	232	.424	.168	.938	-.120
50	233	.461	.214	1.289	-.104
50	234	.532	.209	1.261	.031
50	235	.460	.203	1.188	-.256
50	236	-.059	.126	.338	-.518
50	237	.054	.131	.442	-.412
50	238	.192	.135	.597	-.252
50	239	.320	.157	.882	-.146
50	240	.361	.160	.911	-.086
50	241	.438	.185	1.279	-.057
50	242	.478	.201	1.186	-.124
50	243	.345	.181	1.007	-.305
50	244	-.066	.136	.398	-.537
50	245	.037	.135	.538	-.412
50	246	.142	.131	.674	-.334
50	247	.247	.144	.748	-.140
50	248	.325	.164	.892	-.220
50	249	.330	.165	1.102	-.142
50	250	.356	.180	.984	-.177
50	251	.316	.175	1.003	-.244
50	252	-.110	.126	.330	-.610
50	253	.003	.122	.409	-.432
50	254	.137	.135	.630	-.376
50	255	.237	.152	.775	-.201
50	256	.273	.148	.809	-.161
50	257	.245	.153	.820	-.228
50	258	.173	.143	.632	-.329
50	259	.176	.155	.754	-.421
50	260	-.101	.125	.374	-.557
50	261	-.022	.122	.398	-.596
50	262	.146	.139	.573	-.301
50	263	.238	.146	.925	-.172
50	264	.271	.145	.820	-.153
50	265	.256	.145	.874	-.170
50	266	.197	.151	.796	-.222
50	267	.187	.161	.763	-.245
50	268	.288	.154	.835	-.105
50	269	.294	.179	1.052	-.284
50	270	.346	.184	1.117	-.175
50	271	.336	.165	.958	-.258
50	272	.217	.142	.740	-.281
50	301	-.207	.137	.257	-.697
50	302	-.211	.146	.243	-.676
50	303	-.196	.137	.295	-.748
50	304	-.221	.137	.273	-.692
50	305	-.242	.143	.189	-.773
50	306	-.397	.183	.223	-1.300
50	307	-.202	.129	.175	-.676
50	308	-.207	.130	.342	-.744
50	309	-.195	.126	.198	-.726
50	310	-.226	.133	.280	-.860
50	311	-.250	.164	.207	-.837
50	312	-.235	.140	.214	-.844
50	313	-.200	.129	.187	-.696
50	314	-.202	.131	.267	-.728
50	315	-.196	.125	.278	-.658
50	316	-.215	.125	.213	-.745
50	317	-.219	.141	.183	-.901
50	318	-.216	.123	.169	-.862
50	319	-.197	.124	.183	-.662
50	320	-.193	.126	.214	-.653
50	321	-.195	.129	.275	-.699
50	322	-.210	.130	.251	-.605
50	323	-.200	.130	.310	-.844
50	324	-.210	.131	.208	-.957
50	325	-.197	.125	.260	-.764
50	326	-.193	.128	.208	-.631
50	327	-.194	.128	.321	-.665
50	328	-.212	.129	.176	-.789
50	329	-.221	.130	.192	-.900
50	330	-.207	.125	.198	-.732
50	331	-.218	.137	.255	-1.055
50	332	-.204	.123	.223	-.771
50	333	-.210	.144	.221	-.908
50	334	-.228	.083	.059	-.509
50	335	-.228	.135	.235	-.851
50	336	-.256	.154	.233	-1.041
50	337	-.197	.150	.305	-.941
50	338	-.207	.146	.237	-.885
50	339	-.218	.141	.191	-.984
50	340	-.230	.144	.282	-.794
50	341	-.234	.151	.167	-.863
50	342	-.257	.158	.259	-1.000
50	343	-.190	.140	.271	-.832
50	344	-.188	.131	.268	-.740
50	345	-.213	.137	.270	-.746
50	346	-.218	.154	.322	-.859
50	347	-.239	.168	.471	-1.145
50	348	-.269	.165	.263	-1.091
50	349	-.173	.132	.261	-.671
50	350	-.160	.135	.228	-.666
50	351	-.151	.152	.422	-.881
50	352	-.156	.132	.290	-.638
50	353	-.210	.148	.212	-.770
50	354	-.258	.166	.221	-.907
50	355	-.159	.135	.291	-.629
50	356	-.166	.144	.245	-.846
50	357	-.172	.136	.251	-.616
50	358	-.159	.143	.288	-.760
50	401	-.264	.148	.169	-.841
50	402	-.221	.135	.324	-.635
50	403	-.205	.150	.225	-.744
50	404	-.170	.134	.268	-.599
50	405	-.181	.137	.219	-.678
50	406	-.184	.133	.376	-.627
50	407	-.180	.120	.245	-.595
50	408	-.184	.133	.248	-.617
50	409	-.201	.134	.209	-.620
50	410	-.190	.116	.245	-.582
50	411	-.190	.125	.160	-.661
50	412	-.177	.129	.217	-.671
50	413	-.190	.118	.187	-.795
50	414	-.178	.129	.276	-.589
50	415	-.182	.128	.362	-.729
50	416	-.194	.116	.217	-.612
50	417	-.193	.126	.195	-.600
50	418	-.198	.132	.172	-.573
50	419	-.182	.118	.201	-.587
50	420	-.183	.131	.223	-.611
50	421	-.185	.130	.277	-.624
50	422	-.187	.124	.209	-.652
50	423	-.172	.121	.257	-.573
50	424	-.177	.117	.255	-.561
50	425	-.181	.129	.223	-.555
50	426	-.183	.126	.241	-.575
50	427	-.187	.124	.318	-.573
50	428	-.199	.132	.272	-.732

WD	TAP	CPMEAN	CPRMS	CPMAX	CPMIN
50	429	-.192	.123	.261	-.624
50	430	-.181	.122	.194	-.784
50	431	-.195	.128	.214	-.608
50	432	-.180	.115	.191	-.597
50	433	-.183	.135	.266	-.581
50	434	-.191	.134	.257	-.672
50	435	-.188	.130	.239	-.613
50	436	-.214	.136	.257	-.706
50	437	-.190	.141	.369	-.694
50	438	-.212	.137	.255	-.672
50	439	-.217	.121	.162	-.663
50	440	-.194	.139	.331	-.705
50	441	-.195	.123	.284	-.555
50	442	-.197	.124	.225	-.663
50	443	-.205	.129	.234	-.755
50	444	-.246	.128	.219	-.792
50	445	-.248	.140	.188	-.740
50	446	-.256	.135	.194	-.740
50	447	-.237	.127	.170	-.865
50	448	-.213	.128	.210	-.677
50	449	-.202	.142	.244	-.741
50	450	-.181	.127	.249	-.657
50	451	-.204	.141	.224	-1.072
50	452	-.285	.178	.294	-1.108
50	453	-.275	.152	.138	-.975
50	454	-.245	.142	.183	-.747
50	455	-.280	.145	.176	-.729
50	456	-.187	.137	.237	-.736
50	457	-.169	.129	.244	-.777
50	458	-.172	.133	.219	-.636
50	459	-.181	.137	.298	-.698
50	460	-.237	.140	.132	-.996
50	461	-.246	.134	.180	-.768
50	462	-.198	.152	.381	-.777
50	463	-.153	.139	.221	-.577
50	464	-.160	.130	.279	-.760
50	465	-.170	.130	.258	-.679
50	466	-.238	.146	.232	-.820
50	467	-.236	.127	.206	-.653
50	468	-.239	.142	.264	-.775
50	469	-.185	.150	.255	-.649
50	470	-.150	.136	.286	-.603
50	471	-.138	.131	.325	-.619
50	472	-.273	.142	.155	-.944
50	501	-.485	.236	.113	-1.560
50	502	-.411	.197	.191	-1.393
50	503	-.238	.148	.292	-.833
50	504	-.192	.135	.271	-.754
50	505	-.467	.244	.201	-1.427
50	506	-.388	.217	.176	-1.364
50	507	-.237	.146	.237	-.851
50	508	-.208	.139	.208	-.854
50	509	-.459	.233	.195	-1.493
50	510	-.394	.216	.253	-1.319
50	511	-.249	.147	.235	-.880
50	512	-.212	.150	.188	-1.073
50	513	-.457	.235	.257	-1.495
50	514	-.382	.213	.249	-1.253
50	515	-.251	.155	.221	-.926
50	516	-.200	.146	.373	-.700
50	517	-.447	.246	.318	-1.703
50	518	-.395	.213	.142	-1.438
50	519	-.238	.148	.323	-.747
50	520	-.224	.137	.210	-.706
50	521	-.535	.241	.115	-1.799
50	522	-.473	.233	.145	-1.637
50	523	-.323	.167	.165	-1.412
50	524	-.289	.152	.256	-.902
50	525	-.463	.221	.123	-1.540
50	526	-.429	.202	.173	-1.323
50	527	-.271	.163	.238	-.998
50	528	-.277	.155	.282	-.957
50	529	-.345	.163	.119	-.939
50	530	-.278	.148	.336	-.831
50	531	-.374	.172	.230	-1.039
50	532	-.274	.136	.139	-.755
50	533	-.189	.155	.325	-.722
50	534	-.239	.146	.203	-.714
50	601	-.018	.382	1.141	-1.479
50	602	.004	.340	.848	-1.779
50	603	.024	.152	.529	-.859
50	604	-.013	.157	.499	-.618
50	605	-.023	.376	.967	-1.191
50	606	.066	.379	.891	-1.182
50	607	.093	.192	.799	-.759
50	608	.020	.165	.575	-.733
50	609	-.063	.365	.987	-1.135
50	610	-.023	.408	1.140	-1.246
50	611	.076	.208	.678	-1.146
50	612	.007	.152	.453	-.745
50	613	-.037	.360	.983	-1.095
50	614	-.060	.370	.876	-1.578
50	615	.040	.213	.649	-1.272
50	616	.011	.179	.630	-.954
50	617	-.124	.328	.955	-1.215
50	618	-.003	.309	.979	-.971
50	619	.032	.219	.745	-.986
50	620	.022	.170	.497	-1.030
50	621	-.086	.314	.867	-1.348
50	622	-.018	.324	.846	-1.235
50	623	.008	.199	.612	-.786
50	624	-.054	.185	.568	-1.253
50	625	-.061	.267	.600	-1.637
50	626	-.038	.259	.708	-1.224
50	627	.035	.184	.634	-.891
50	628	-.091	.161	.386	-.934
50	629	-.049	.202	.571	-1.179
50	630	.044	.164	.545	-.803
50	631	-.015	.232	.660	-.823
50	632	-.004	.180	.555	-.816
50	633	.054	.240	.732	-1.034
50	634	.174	.147	.623	-.483
50	801	-.172	.137	.302	-.781
50	802	-.157	.135	.226	-.697
50	803	-.023	.134	.405	-.437
50	804	-.059	.189	.551	-.818
50	805	-.140	.161	.337	-.814
50	806	-.027	.174	.472	-.736
50	807	-.045	.190	.457	-.991
50	808	-.058	.165	.455	-.978
50	809	-.061	.144	.398	-.701
50	810	-.369	.173	.156	-1.048
50	811	-.252	.143	.359	-.738
50	812	-.339	.153	.100	-.821
50	813	-.361	.155	.104	-1.058
50	814	-.325	.179	.169	-1.095
50	815	-.278	.157	.228	-.830
50	901	-.250	.161	.286	-.951
50	902	-.211	.155	.346	-.989
50	903	-.256	.153	.315	-.883
50	904	-.095	.151	.328	-.636
50	905	-.187	.123	.304	-.527
50	906	-.294	.185	.268	-1.245
50	907	-.212	.145	.291	-.862
50	908	-.259	.158	.323	-.911
50	909	-.282	.159	.264	-.883
50	910	-.360	.215	.261	-1.535
50	911	-.259	.165	.217	-.951
50	912	-.090	.154	.434	-.720
50	913	-.291	.183	.355	-.949
50	914	-.172	.181	.517	-.983
50	915	-.188	.172	.499	-1.116
50	916	-.588	.356	.184	-1.918
50	917	-.195	.224	.821	-.965
50	918	-.418	.250	.397	-1.389
50	919	-.235	.187	.337	-1.160
50	920	-.151	.163	.446	-.849
50	921	-.173	.157	.375	-.763
50	1101	-.085	.132	.400	-.508
50	1102	.265	.156	1.000	-.180

UD	TAP	CPMEAN	CPRMS	CPMAX	CPMIN
50	1103	.078	.128	.576	-.304
50	1104	.171	.155	.703	-.260
50	1105	.165	.144	.674	-.395
50	1106	.079	.146	.573	-.357
50	1107	.011	.128	.417	-.453
50	1108	.151	.126	.629	-.267
50	1109	-.002	.149	.792	-.426
50	1110	-.047	.147	.386	-.707
50	1111	.156	.127	.713	-.234
50	1112	.201	.125	.733	-.207
50	1113	.096	.143	.638	-.393
50	1114	.183	.130	.614	-.270
50	1115	-.075	.128	.329	-.513
50	1116	-.025	.141	.530	-.537
50	1117	.136	.109	.511	-.202
50	1118	.203	.139	.716	-.206
50	1119	.203	.137	.715	-.309
50	1120	.142	.121	.610	-.291
50	1121	.180	.141	.819	-.246
50	1122	.246	.145	.817	-.147
50	1123	.172	.124	.648	-.176
50	1124	.108	.134	.655	-.295
50	1125	.164	.119	.617	-.214
50	1126	-.054	.131	.303	-.454
50	1201	-.210	.131	.232	-.702
50	1202	-.248	.141	.238	-.754
50	1203	-.300	.167	.282	-.878
50	1204	.085	.154	.657	-.600
50	1205	-.323	.167	.239	-.983
50	1206	-.250	.178	.312	-.957
50	1207	-.054	.141	.389	-.669
50	1208	-.045	.126	.386	-.595
50	1209	-.014	.122	.442	-.460
50	1210	-.097	.142	.347	-.649
50	1211	-.003	.122	.414	-.407
50	1212	.008	.120	.387	-.490
50	1213	-.107	.153	.321	-.920
50	1214	-.225	.123	.228	-.702
50	1215	.002	.129	.375	-.481
50	1216	-.028	.138	.453	-.476
50	1217	.081	.113	.506	-.263
50	1218	.073	.112	.451	-.322
50	1219	.084	.137	.493	-.503
50	1220	-.074	.122	.333	-.485
50	1221	-.002	.112	.426	-.361
50	1222	.142	.119	.527	-.277
50	1223	.247	.140	.720	-.194
50	1224	-.074	.123	.446	-.539
50	1225	.033	.117	.390	-.346
50	1226	-.087	.140	.313	-.667
50	1227	.183	.123	.552	-.226
50	1228	.268	.136	.892	-.138
50	1229	.180	.120	.769	-.177
50	1301	-.207	.107	.108	-.611
50	1302	-.249	.127	.198	-.752
50	1303	-.270	.135	.199	-.815
50	1304	-.225	.117	.124	-.775
50	1305	-.199	.115	.175	-.575
50	1306	-.199	.131	.219	-.675
50	1307	-.160	.110	.208	-.561
50	1308	-.233	.129	.242	-.657
50	1309	-.218	.140	.296	-.754
50	1311	-.142	.116	.262	-.545
50	1312	-.178	.121	.208	-.547
50	1313	-.156	.114	.320	-.611
50	1314	-.157	.114	.153	-.585
50	1315	-.057	.118	.341	-.490
50	1316	-.092	.139	.310	-.720
50	1317	-.157	.106	.179	-.551
50	1318	-.147	.119	.232	-.533
50	1319	-.139	.113	.280	-.466
50	1320	-.137	.112	.227	-.592
50	1321	-.183	.123	.187	-.561
50	1322	-.152	.118	.211	-.568
50	1323	-.092	.129	.320	-.526
50	1324	-.119	.103	.254	-.473
50	1325	-.159	.125	.225	-.624
50	1326	-.111	.104	.251	-.528
50	1327	-.126	.110	.260	-.492
50	1328	-.128	.117	.213	-.530
50	1329	-.121	.144	.285	-.619
50	1330	-.159	.126	.199	-.625
50	1331	-.170	.125	.173	-.610
50	1401	-.245	.128	.143	-.771
50	1402	-.233	.140	.338	-.789
50	1403	-.274	.126	.079	-.789
50	1404	-.244	.130	.109	-.695
50	1405	-.262	.172	.342	-1.054
50	1406	-.319	.146	.089	-.848
50	1407	-.257	.122	.077	-.678
50	1408	-.120	.114	.242	-.528
50	1409	-.045	.142	.370	-.599
50	1410	.132	.126	.651	-.237
50	1411	-.161	.138	.376	-.779
50	1412	-.158	.122	.268	-.688
50	1413	-.175	.171	.517	-.870
50	1414	-.044	.144	.483	-.586
50	1415	-.004	.156	.522	-.693
50	1416	-.202	.131	.237	-.562
50	1417	-.137	.124	.212	-.557
50	1418	-.074	.126	.343	-.496
50	1419	-.077	.114	.261	-.568
50	1420	-.137	.127	.270	-.574
50	1421	-.178	.122	.217	-.562
50	1422	-.245	.161	.213	-.781
50	1423	-.207	.170	.359	-.731
50	1424	-.168	.148	.194	-.681
50	1425	-.094	.124	.345	-.492
50	1426	-.023	.111	.440	-.405
50	1427	-.138	.144	.265	-.720
50	1428	-.067	.112	.232	-.439
50	1429	-.049	.109	.381	-.407
50	1430	-.031	.129	.399	-.512
50	1431	-.037	.116	.387	-.576
50	1432	.004	.122	.518	-.385
50	1433	-.073	.107	.294	-.447
50	1434	-.257	.148	.172	-.912
50	1435	-.143	.118	.203	-.522
50	1901	-.115	.120	.390	-.832
50	1902	-.050	.193	.388	-.882
50	1903	.310	.105	.816	-.078
50	1904	-.186	.179	.320	-.865
50	1905	.088	.115	.469	-.348
50	1906	.095	.122	.561	-.250
50	1907	-.122	.160	.497	-.681
50	1908	-.173	.170	.345	-.941
50	1909	-.208	.147	.308	-.780
50	1910	-.230	.157	.223	-.844
50	1911	.127	.123	.542	-.243
50	1912	.121	.128	.627	-.300
50	1913	-.068	.204	.535	-1.240
50	1914	-.215	.154	.289	-.894
50	1915	.076	.119	.655	-.345
50	1916	-.203	.204	.448	-.977
50	1917	-.094	.166	.587	-.641
50	1918	-.120	.136	.348	-.638
50	1919	-.156	.173	.462	-1.027
50	1920	.002	.125	.402	-.712
50	1921	-.109	.128	.362	-.527
50	1922	-.090	.148	.429	-.638
50	1923	-.076	.169	.455	-.660
50	1924	-.096	.173	.578	-.674
50	1925	-.150	.152	.372	-.652
50	1926	.027	.131	.474	-.443
50	1927	-.041	.120	.367	-.473
50	1928	-.025	.128	.496	-.452
50	1929	.002	.139	.484	-.464
50	1930	-.095	.157	.475	-.582
50	1931	-.190	.154	.253	-.750
50	1932	-.194	.158	.304	-.878

WD	TAP	CPMEAN	CPRMS	CPMAX	CPMIN
50	1933	-.103	.107	.260	-.431
50	1934	-.100	.111	.253	-.492
50	1935	-.081	.116	.341	-.487
50	1936	-.114	.127	.372	-.624
50	1937	-.125	.128	.402	-.543
50	1938	-.099	.134	.358	-.606
50	1939	-.115	.142	.409	-.689
50	1940	-.225	.124	.153	-.741
50	1941	-.208	.124	.302	-.645
50	1942	-.211	.113	.117	-.610
50	1943	-.260	.122	.241	-.844
50	1944	-.223	.118	.155	-.697
50	1945	-.226	.121	.150	-.773
50	1946	-.213	.123	.171	-.583
50	1947	-.248	.121	.122	-.689
50	1948	-.144	.145	.484	-.750
50	1949	-.109	.120	.257	-.611
50	1950	-.087	.148	.330	-.574
50	1951	-.081	.130	.417	-.546
50	1952	-.211	.119	.220	-.691
50	1953	-.206	.123	.149	-.635
50	1954	-.167	.129	.290	-.585
50	1955	-.104	.135	.349	-.789
50	1956	-.059	.123	.438	-.585
50	1957	-.164	.114	.250	-.613
50	1958	-.141	.142	.264	-.604
50	1959	-.061	.145	.466	-.569
50	1960	-.079	.134	.431	-.574
50	1961	-.041	.118	.419	-.529
50	1962	-.149	.116	.646	-.555
50	1963	-.142	.111	.246	-.585
50	1964	-.188	.113	.173	-.618
50	1965	-.128	.126	.400	-.599
50	1966	-.104	.123	.293	-.527
50	1967	-.108	.145	.374	-.756
50	1968	-.124	.126	.327	-.557
60	101	-.285	.179	.252	-1.028
60	102	-.284	.172	.325	-1.521
60	103	-.213	.174	.397	-1.145
60	104	-.224	.171	.334	-.897
60	105	-.219	.148	.218	-.792
60	106	-.241	.157	.246	-.966
60	107	-.290	.167	.210	-.908
60	108	-.295	.164	.286	-.948
60	109	-.225	.189	.700	-1.240
60	110	-.156	.236	.913	-1.805
60	111	-.045	.254	.958	-1.238
60	112	.035	.282	1.062	-1.182
60	113	.083	.283	1.089	-1.166
60	114	-.226	.157	.218	-1.007
60	115	-.230	.148	.320	-.797
60	116	-.251	.146	.187	-.806
60	117	-.253	.158	.144	-.940
60	118	-.238	.144	.265	-.745
60	119	-.251	.151	.241	-.885
60	120	-.203	.149	.472	-.720
60	121	-.126	.190	.963	-.738
60	122	-.054	.216	1.012	-.865
60	123	-.007	.235	.877	-.722
60	124	-.197	.159	.279	-1.152
60	125	-.174	.148	.343	-.777
60	126	-.199	.143	.246	-.773
60	127	-.233	.161	.260	-.888
60	128	-.207	.136	.209	-.810
60	129	-.225	.145	.204	-.765
60	130	-.225	.146	.237	-.718
60	131	-.199	.176	.363	-.979
60	132	-.168	.209	.777	-.977
60	133	-.120	.222	.729	-1.534
60	134	-.173	.177	.376	-.991
60	135	-.167	.159	.334	-.867
60	136	-.199	.156	.363	-.773
60	137	-.228	.162	.264	-.943
60	138	-.253	.159	.213	-1.049
60	139	-.238	.153	.204	-.852
60	140	-.245	.181	.260	-.984
60	141	-.221	.172	.347	-1.152
60	142	-.149	.210	.719	-1.174
60	143	-.144	.229	.821	-1.991
60	144	-.159	.179	.445	-1.942
60	145	-.180	.164	.305	-.906
60	146	-.218	.181	.343	-1.172
60	147	-.192	.149	.318	-.762
60	148	-.237	.150	.215	-.765
60	149	-.230	.164	.389	-.794
60	150	-.254	.184	.284	-1.064
60	151	-.233	.185	.559	-1.058
60	152	-.196	.224	.634	-1.360
60	153	-.210	.246	.702	-1.288
60	154	-.281	.201	.251	-1.270
60	155	-.268	.195	.255	-1.297
60	156	-.329	.203	.209	-1.588
60	157	-.294	.182	.153	-1.122
60	158	-.255	.174	.235	-.990
60	159	-.159	.169	.475	-.763
60	160	-.074	.194	.781	-.675
60	161	-.034	.235	1.157	-.738
60	162	.060	.281	.973	-.872
60	163	.081	.282	1.029	-1.402
60	164	-.579	.361	.294	-2.286
60	165	-.511	.303	.197	-1.986
60	166	-.321	.210	.275	-1.310
60	167	-.217	.181	.347	-.899
60	168	-.094	.163	.439	-.928
60	169	-.085	.151	.530	-.608
60	170	-.115	.153	.546	-.604
60	171	-.045	.155	.568	-.584
60	172	-.083	.169	.675	-.707
60	173	-.119	.160	.440	-.843
60	174	-.300	.167	.159	-.981
60	175	-.199	.139	.333	-.978
60	176	-.130	.142	.351	-.609
60	177	-.105	.130	.349	-.632
60	178	-.252	.148	.182	-.967
60	179	-.276	.152	.229	-.953
60	180	-.274	.170	.198	-.956
60	181	-.116	.134	.353	-.582
60	182	-.080	.124	.360	-.488
60	183	-.211	.135	.173	-.754
60	184	-.305	.195	.213	-1.507
60	185	-.035	.135	.467	-.540
60	186	-.103	.122	.263	-.705
60	187	-.151	.123	.216	-.605
60	201	.246	.196	.911	-.323
60	202	-.415	.214	.211	-1.539
60	203	-.327	.166	.262	-1.147
60	204	.021	.147	.557	-.557
60	205	.149	.166	.679	-.427
60	206	.154	.167	.733	-.404
60	207	.201	.160	.744	-.456
60	208	.197	.175	.845	-.360
60	209	.275	.182	.820	-.404
60	210	.335	.197	.991	-.359
60	211	.364	.201	1.080	-.368
60	212	-.062	.145	.465	-.580
60	213	.118	.152	.947	-.398
60	214	.302	.176	.923	-.196
60	215	.419	.182	1.181	-.049
60	216	.467	.188	1.188	-.033
60	217	.549	.209	1.287	-.065
60	218	.514	.207	1.183	-.274
60	219	.415	.206	1.208	-.204
60	220	.002	.149	.532	-.596
60	221	.131	.138	.663	-.303
60	222	.323	.171	.935	-.220
60	223	.420	.179	1.014	-.166
60	224	.504	.185	1.194	.014
60	225	.546	.196	1.174	-.010
60	226	.523	.206	1.278	-.056
60	227	.407	.217	1.316	-.398

WD	TAP	CPMEAN	CPRMS	CPMAX	CPMIN	WD	TAP	CPMEAN	CPRMS	CPMAX	CPMIN	WD	TAP	CPMEAN	CPRMS	CPMAX	CPMIN
60	228	-.025	.137	.409	-.461	60	306	-.472	.215	.304	-1.541	60	356	-.182	.138	.261	-.727
60	229	.122	.134	.582	-.378	60	307	-.201	.141	.297	-.678	60	357	-.209	.153	.406	-.882
60	230	.312	.163	.978	-.148	60	308	-.194	.140	.363	-.667	60	358	-.177	.158	.393	-.763
60	231	.410	.169	1.054	-.083	60	309	-.198	.141	.295	-.857	60	401	-.233	.155	.273	-1.039
60	232	.492	.170	1.136	-.083	60	310	-.210	.146	.262	-.925	60	402	-.218	.148	.284	-.765
60	233	.549	.195	1.305	.012	60	311	-.300	.185	.284	-.958	60	403	-.181	.151	.358	-.767
60	234	.505	.229	1.356	-.163	60	312	-.364	.214	.361	-1.473	60	404	-.187	.147	.391	-.759
60	235	.367	.197	1.100	-.262	60	313	-.203	.139	.225	-.775	60	405	-.179	.150	.230	-1.728
60	236	-.034	.143	.526	-.801	60	314	-.195	.131	.317	-.731	60	406	-.176	.127	.262	-.617
60	237	.104	.142	.638	-.420	60	315	-.202	.137	.231	-.786	60	407	-.187	.127	.196	-.711
60	238	.277	.149	.821	-.213	60	316	-.241	.138	.159	-.797	60	408	-.212	.139	.245	-.822
60	239	.387	.160	.922	-.046	60	317	-.278	.181	.194	-1.163	60	409	-.200	.136	.216	-.665
60	240	.451	.180	1.050	-.078	60	318	-.290	.203	.233	-1.280	60	410	-.197	.139	.279	-.658
60	241	.472	.178	1.147	-.098	60	319	-.197	.143	.277	-.916	60	411	-.194	.139	.258	-.711
60	242	.379	.189	1.097	-.229	60	320	-.193	.135	.178	-.681	60	412	-.183	.148	.351	-.773
60	243	.296	.200	1.016	-.319	60	321	-.194	.150	.374	-.899	60	413	-.188	.140	.261	-.802
60	244	-.060	.143	.404	-.709	60	322	-.223	.148	.218	-.804	60	414	-.191	.142	.191	-1.294
60	245	.078	.136	.568	-.452	60	323	-.253	.161	.178	-1.447	60	415	-.173	.119	.208	-.631
60	246	.209	.149	.765	-.386	60	324	-.285	.205	.246	-1.231	60	416	-.188	.141	.268	-.720
60	247	.290	.153	1.115	-.160	60	325	-.192	.159	.306	-.936	60	417	-.186	.118	.300	-.553
60	248	.341	.173	.898	-.275	60	326	-.189	.165	.306	-1.006	60	418	-.187	.127	.171	-.642
60	249	.349	.170	.946	-.160	60	327	-.191	.140	.253	-.714	60	419	-.182	.133	.250	-.631
60	250	.321	.183	.955	-.282	60	328	-.225	.152	.214	-.993	60	420	-.190	.133	.310	-.682
60	251	.189	.171	.671	-.291	60	329	-.264	.174	.152	-1.073	60	421	-.189	.145	.231	-.837
60	252	-.077	.130	.428	-.519	60	330	-.295	.211	.203	-1.236	60	422	-.179	.128	.220	-.645
60	253	.040	.129	.552	-.345	60	331	-.207	.147	.203	-1.401	60	423	-.170	.118	.264	-.547
60	254	.198	.134	.636	-.196	60	332	-.201	.144	.207	-.916	60	424	-.179	.137	.242	-.669
60	255	.282	.160	.821	-.297	60	333	-.202	.147	.299	-.839	60	425	-.185	.127	.254	-.653
60	256	.309	.148	.852	-.106	60	334	-.217	.103	.100	-.533	60	426	-.181	.161	.277	-.833
60	257	.214	.146	.720	-.278	60	335	-.302	.184	.198	-.991	60	427	-.187	.135	.245	-.641
60	258	.136	.162	.720	-.471	60	336	-.305	.208	.266	-1.233	60	428	-.205	.142	.207	-.739
60	259	.116	.169	.824	-.524	60	337	-.197	.151	.247	-.998	60	429	-.192	.141	.222	-.660
60	260	-.086	.136	.345	-.564	60	338	-.206	.148	.251	-.951	60	430	-.181	.125	.245	-.626
60	261	.011	.121	.426	-.402	60	339	-.196	.161	.341	-.877	60	431	-.173	.121	.190	-.602
60	262	.176	.134	.618	-.329	60	340	-.226	.168	.348	-1.376	60	432	-.171	.126	.214	-.566
60	263	.305	.158	.959	-.158	60	341	-.281	.163	.209	-.890	60	433	-.174	.135	.238	-.796
60	264	.327	.164	.926	-.230	60	342	-.350	.196	.170	-1.810	60	434	-.172	.134	.258	-.774
60	265	.216	.151	.690	-.277	60	343	-.176	.139	.231	-.747	60	435	-.196	.148	.236	-.743
60	266	.221	.156	.903	-.246	60	344	-.183	.128	.261	-.686	60	436	-.194	.147	.282	-.943
60	267	.239	.143	.743	-.223	60	345	-.199	.160	.260	-1.266	60	437	-.205	.139	.231	-.754
60	268	.320	.153	.876	-.085	60	346	-.226	.155	.229	-.859	60	438	-.218	.132	.255	-.787
60	269	.397	.162	1.174	-.094	60	347	-.239	.171	.245	-1.144	60	439	-.188	.142	.371	-.673
60	270	.360	.181	1.082	-.090	60	348	-.291	.188	.253	-1.148	60	440	-.173	.130	.251	-.641
60	271	.319	.157	.987	-.130	60	349	-.157	.137	.326	-.680	60	441	-.184	.122	.271	-.682
60	272	.154	.163	.806	-.256	60	350	-.162	.140	.295	-.827	60	442	-.201	.133	.249	-.831
60	301	-.206	.135	.295	-.691	60	351	-.186	.154	.259	-1.150	60	443	-.189	.136	.207	-.689
60	302	-.220	.151	.220	-.792	60	352	-.154	.144	.353	-.745	60	444	-.220	.146	.206	-.879
60	303	-.224	.155	.316	-.800	60	353	-.189	.149	.308	-.702	60	445	-.231	.141	.217	-.743
60	304	-.211	.160	.321	-.883	60	354	-.260	.168	.276	-1.075	60	446	-.237	.146	.239	-.773
60	305	-.234	.155	.325	-.883	60	355	-.157	.141	.359	-.721	60	447	-.210	.136	.165	-.903

WD	TAP	CPMEAN	CPRMS	CPMAX	CPMIN
60	448	-.177	.134	.386	-.788
60	449	-.172	.145	.279	-.666
60	450	-.183	.140	.300	-.698
60	451	-.183	.140	.233	-.727
60	452	-.259	.175	.255	-1.353
60	453	-.259	.157	.169	-1.019
60	454	-.256	.133	.123	-.687
60	455	-.237	.151	.257	-.778
60	456	-.176	.147	.285	-.813
60	457	-.168	.138	.268	-.670
60	458	-.161	.132	.254	-.718
60	459	-.175	.144	.243	-.767
60	460	-.208	.139	.426	-.767
60	461	-.233	.133	.149	-.729
60	462	-.178	.143	.342	-.759
60	463	-.157	.130	.236	-.741
60	464	-.153	.134	.265	-.756
60	465	-.164	.138	.276	-.839
60	466	-.211	.141	.386	-.685
60	467	-.213	.141	.330	-.805
60	468	-.168	.146	.268	-.642
60	469	-.147	.134	.306	-.553
60	470	-.139	.142	.319	-.723
60	471	-.150	.136	.288	-.669
60	472	-.265	.147	.169	-.895
60	501	-.449	.274	.248	-1.818
60	502	-.335	.200	.317	-1.276
60	503	-.214	.161	.364	-.987
60	504	-.192	.170	.360	-.810
60	505	-.375	.268	.270	-1.652
60	506	-.295	.187	.178	-1.136
60	507	-.208	.148	.281	-.716
60	508	-.197	.147	.287	-.666
60	509	-.337	.216	.314	-1.764
60	510	-.294	.187	.217	-1.054
60	511	-.226	.156	.318	-.938
60	512	-.207	.153	.235	-.883
60	513	-.339	.224	.338	-1.689
60	514	-.315	.188	.268	-1.182
60	515	-.219	.157	.199	-1.153
60	516	-.229	.152	.237	-.964
60	517	-.400	.229	.204	-1.443
60	518	-.304	.204	.307	-1.217
60	519	-.222	.153	.228	-.885
60	520	-.220	.144	.312	-.942
60	521	-.507	.285	.349	-1.748
60	522	-.385	.237	.206	-1.546
60	523	-.264	.165	.229	-1.065
60	524	-.259	.164	.258	-.900
60	525	-.399	.209	.100	-1.314
60	526	-.331	.189	.211	-1.375
60	527	-.256	.153	.250	-.940
60	528	-.260	.154	.207	-.940
60	529	-.292	.162	.176	-.962
60	530	-.257	.136	.247	-.716
60	531	-.291	.160	.252	-.947
60	532	-.238	.136	.267	-.814
60	533	-.183	.140	.409	-.741
60	534	-.217	.136	.182	-.752
60	601	-.432	.286	.510	-1.948
60	602	-.399	.350	.599	-1.657
60	603	-.154	.200	.391	-1.211
60	604	-.187	.171	.273	-.969
60	605	-.440	.283	.566	-1.458
60	606	-.411	.300	.657	-1.475
60	607	-.189	.238	.370	-1.258
60	608	-.212	.199	.272	-1.192
60	609	-.426	.258	.499	-1.689
60	610	-.402	.284	.617	-1.567
60	611	-.236	.256	.396	-1.486
60	612	-.222	.228	.364	-1.382
60	613	-.429	.284	.856	-1.485
60	614	-.410	.307	.757	-2.218
60	615	-.243	.277	.369	-1.298
60	616	-.256	.251	.501	-1.583
60	617	-.405	.281	.642	-1.621
60	618	-.383	.297	.587	-1.695
60	619	-.199	.269	.481	-1.380
60	620	-.214	.246	.371	-1.583
60	621	-.414	.255	.495	-1.465
60	622	-.382	.313	.586	-1.670
60	623	-.262	.275	.342	-1.371
60	624	-.261	.224	.247	-1.246
60	625	-.332	.283	.581	-1.754
60	626	-.293	.277	.477	-1.278
60	627	-.102	.207	.393	-1.763
60	628	-.241	.170	.275	-1.027
60	629	-.210	.200	.439	-.852
60	630	-.206	.226	.429	-1.432
60	631	-.252	.224	.486	-1.132
60	632	-.238	.228	.396	-1.364
60	633	-.236	.288	.695	-1.278
60	634	.098	.185	.581	-.883
60	801	-.208	.159	.218	-1.226
60	802	-.152	.139	.332	-.692
60	803	-.115	.145	.283	-.624
60	804	-.222	.212	.375	-1.167
60	805	-.255	.171	.240	-1.258
60	806	-.167	.202	.402	-.982
60	807	-.248	.205	.425	-1.161
60	808	-.231	.211	.324	-1.059
60	809	-.161	.168	.317	-.845
60	810	-.339	.176	.283	-1.034
60	811	-.231	.134	.292	-.701
60	812	-.272	.146	.236	-.944
60	813	-.276	.146	.165	-.815
60	814	-.284	.163	.148	-1.159
60	815	-.251	.144	.152	-.766
60	901	-.250	.172	.232	-1.179
60	902	-.245	.176	.304	-.881
60	903	-.231	.162	.262	-.906
60	904	-.147	.168	.393	-.709
60	905	-.186	.144	.244	-.689
60	906	-.284	.199	.327	-1.116
60	907	-.246	.181	.309	-1.100
60	908	-.247	.169	.345	-.905
60	909	-.290	.163	.228	-.967
60	910	-.314	.183	.218	-1.276
60	911	-.247	.182	.270	-1.310
60	912	-.181	.158	.325	-.810
60	913	-.346	.173	.216	-1.217
60	914	-.266	.171	.259	-1.066
60	915	-.176	.181	.445	-.983
60	916	-.388	.240	.230	-1.455
60	917	-.284	.186	.431	-.957
60	918	-.377	.194	.167	-1.258
60	919	-.202	.182	.413	-.935
60	920	-.082	.164	.540	-.747
60	921	-.110	.184	.470	-.759
60	1101	-.159	.140	.274	-.942
60	1102	.282	.173	.896	-.251
60	1103	-.002	.128	.382	-.429
60	1104	.042	.143	.797	-.503
60	1105	.067	.169	.672	-.448
60	1106	-.033	.158	.498	-.578
60	1107	-.103	.143	.385	-.699
60	1108	.114	.143	.676	-.405
60	1109	-.082	.126	.340	-.532
60	1110	-.198	.172	.230	-.937
60	1111	.165	.156	.785	-.286
60	1112	.161	.145	.700	-.326
60	1113	.046	.153	.573	-.513
60	1114	.179	.143	.795	-.341
60	1115	-.146	.129	.618	-.606
60	1116	-.123	.134	.408	-.558
60	1117	.092	.119	.743	-.308
60	1118	.190	.150	.801	-.320
60	1119	.142	.136	.765	-.451
60	1120	.053	.119	.680	-.350
60	1121	.169	.131	.633	-.264

WD	TAP	CPMEAN	CPRMS	CPMAX	CPMIN
60	1122	.270	.135	.825	-.096
60	1123	.129	.123	.565	-.267
60	1124	.006	.126	.414	-.460
60	1125	.151	.127	.631	-.283
60	1126	-.121	.146	.421	-.711
60	1201	-.251	.116	.102	-.674
60	1202	-.318	.167	.168	-1.056
60	1203	-.338	.188	.237	-1.141
60	1204	.103	.168	.619	-.651
60	1205	-.342	.210	.107	-1.304
60	1206	-.227	.168	.258	-.950
60	1207	-.122	.139	.375	-.692
60	1208	-.148	.131	.232	-.783
60	1209	-.094	.139	.416	-.599
60	1210	-.210	.149	.240	-.817
60	1211	-.084	.125	.299	-.517
60	1212	-.079	.123	.291	-.558
60	1213	-.167	.168	.291	-.878
60	1214	-.278	.155	.201	-.821
60	1215	-.052	.124	.303	-.547
60	1216	-.106	.137	.294	-.537
60	1217	.014	.136	.425	-.564
60	1218	.018	.131	.427	-.394
60	1219	.078	.148	.580	-.779
60	1220	-.168	.136	.211	-.639
60	1221	-.077	.128	.328	-.614
60	1222	.113	.121	.545	-.246
60	1223	.274	.161	.991	-.213
60	1224	-.113	.127	.257	-.569
60	1225	-.057	.137	.342	-.612
60	1226	-.192	.161	.252	-.765
60	1227	.181	.127	.613	-.307
60	1228	.299	.168	.928	-.118
60	1229	.164	.134	.688	-.248
60	1301	-.253	.136	.159	-.846
60	1302	-.336	.165	.149	-.879
60	1303	-.352	.172	.161	-.938
60	1304	-.254	.132	.150	-.730
60	1305	-.233	.130	.176	-.664
60	1306	-.227	.122	.128	-.678
60	1307	-.204	.129	.175	-.746
60	1308	-.264	.142	.181	-.820
60	1309	-.192	.154	.362	-.848
60	1311	-.187	.112	.183	-.718
60	1312	-.211	.126	.131	-.680
60	1313	-.208	.116	.189	-.650
60	1314	-.192	.113	.201	-.607
60	1315	-.127	.124	.267	-.737
60	1316	-.186	.131	.258	-.661
60	1317	-.178	.115	.187	-.695

WD	TAP	CPMEAN	CPRMS	CPMAX	CPMIN
60	1318	-.216	.114	.208	-.656
60	1319	-.175	.119	.201	-.621
60	1320	-.170	.105	.120	-.549
60	1321	-.191	.127	.206	-.860
60	1322	-.172	.126	.320	-.635
60	1323	-.202	.155	.239	-.794
60	1324	-.156	.115	.184	-.494
60	1325	-.195	.117	.113	-.675
60	1326	-.144	.119	.204	-.639
60	1327	-.162	.136	.256	-.564
60	1328	-.172	.139	.225	-.640
60	1329	-.214	.155	.228	-.813
60	1330	-.225	.126	.175	-.624
60	1331	-.236	.126	.162	-.652
60	1401	-.278	.124	.118	-.889
60	1402	-.340	.149	.125	-.970
60	1403	-.280	.138	.117	-.738
60	1404	-.280	.136	.098	-.777
60	1405	-.319	.159	.360	-.993
60	1406	-.364	.163	.127	-1.087
60	1407	-.335	.146	.117	-.872
60	1408	-.170	.118	.178	-.602
60	1409	-.178	.155	.258	-.818
60	1410	.080	.138	.739	-.287
60	1411	-.255	.121	.139	-.719
60	1412	-.217	.120	.229	-.592
60	1413	-.262	.154	.198	-.782
60	1414	-.219	.183	.317	-1.221
60	1415	-.126	.177	.432	-.948
60	1416	-.266	.133	.139	-.748
60	1417	-.222	.123	.146	-.768
60	1418	-.155	.116	.267	-.487
60	1419	-.136	.106	.218	-.494
60	1420	-.211	.122	.213	-.653
60	1421	-.249	.133	.139	-.709
60	1422	-.341	.168	.184	-1.020
60	1423	-.260	.166	.201	-.942
60	1424	-.228	.148	.215	-.672
60	1425	-.157	.139	.227	-.607
60	1426	-.096	.120	.344	-.490
60	1427	-.211	.149	.181	-.716
60	1428	-.142	.122	.228	-.577
60	1429	-.129	.124	.269	-.587
60	1430	-.114	.115	.291	-.548
60	1431	-.090	.116	.307	-.432
60	1432	-.048	.122	.322	-.520
60	1433	-.134	.112	.215	-.521
60	1434	-.361	.175	.136	-1.075
60	1435	-.186	.121	.155	-.599
60	1901	-.207	.169	.284	-.794

WD	TAP	CPMEAN	CPRMS	CPMAX	CPMIN
60	1902	-.214	.201	.298	-1.039
60	1903	.217	.097	.577	-.187
60	1904	-.279	.176	.310	-.900
60	1905	.021	.103	.440	-.266
60	1906	.023	.117	.490	-.420
60	1907	-.284	.161	.234	-.934
60	1908	-.305	.174	.167	-1.116
60	1909	-.335	.172	.149	-1.078
60	1910	-.364	.182	.157	-1.128
60	1911	.076	.118	.487	-.274
60	1912	.095	.121	.613	-.490
60	1913	-.307	.263	.442	-1.510
60	1914	-.316	.161	.154	-1.029
60	1915	.001	.107	.512	-.323
60	1916	-.385	.229	.264	-1.324
60	1917	-.267	.188	.243	-.889
60	1918	-.275	.152	.139	-.957
60	1919	-.287	.172	.146	-.925
60	1920	-.105	.138	.254	-.743
60	1921	-.197	.132	.167	-.716
60	1922	-.192	.147	.318	-.761
60	1923	-.195	.216	.549	-1.387
60	1924	-.312	.205	.428	-1.207
60	1925	-.272	.146	.133	-.826
60	1926	-.093	.126	.347	-.631
60	1927	-.108	.111	.292	-.532
60	1928	-.086	.127	.344	-.729
60	1929	-.053	.139	.540	-.604
60	1930	-.238	.162	.268	-.814
60	1931	-.325	.149	.140	-.961
60	1932	-.291	.164	.096	-.974
60	1933	-.154	.113	.236	-.510
60	1934	-.155	.118	.265	-.619
60	1935	-.131	.111	.310	-.498
60	1936	-.180	.131	.261	-.783
60	1937	-.238	.134	.170	-.797
60	1938	-.193	.133	.260	-.726
60	1939	-.249	.133	.170	-.736
60	1940	-.244	.115	.138	-.695
60	1941	-.242	.130	.163	-.738
60	1942	-.239	.121	.153	-.665
60	1943	-.262	.131	.148	-.826
60	1944	-.259	.122	.079	-.739
60	1945	-.258	.132	.074	-.812
60	1946	-.236	.113	.124	-.631
60	1947	-.264	.141	.129	-.801
60	1948	-.251	.134	.140	-.768
60	1949	-.189	.130	.162	-.728
60	1950	-.220	.134	.184	-.624
60	1951	-.176	.124	.306	-.681

WD	TAP	CPMEAN	CPRMS	CPMAX	CPMIN	WD	TAP	CPMEAN	CPRMS	CPMAX	CPMIN	WD	TAP	CPMEAN	CPRMS	CPMAX	CPMIN
60	1952	-.235	.127	.161	-.733	70	134	-.285	.192	.233	-1.420	70	184	-.428	.240	.081	-1.503
60	1953	-.243	.119	.162	-.765	70	135	-.252	.161	.208	-.938	70	185	-.094	.140	.367	-.566
60	1954	-.232	.129	.172	-.755	70	136	-.252	.155	.198	-.804	70	186	-.141	.136	.275	-.544
60	1955	-.233	.128	.152	-.688	70	137	-.256	.153	.367	-.936	70	187	-.171	.134	.354	-.640
60	1956	-.124	.128	.240	-.612	70	138	-.276	.174	.212	-1.181	70	201	.390	.223	1.283	-.258
60	1957	-.230	.133	.193	-.694	70	139	-.305	.171	.208	-.938	70	202	-.440	.223	.225	-1.275
60	1958	-.242	.139	.139	-.738	70	140	-.297	.167	.267	-1.079	70	203	-.339	.199	.241	-1.211
60	1959	-.201	.135	.189	-.669	70	141	-.288	.171	.285	-1.073	70	204	.106	.164	.655	-.463
60	1960	-.187	.135	.272	-.770	70	142	-.300	.197	.328	-1.181	70	205	.224	.183	.976	-.339
60	1961	-.150	.129	.203	-.661	70	143	-.282	.218	.643	-1.483	70	206	.193	.178	.751	-.458
60	1962	-.189	.110	.171	-.661	70	144	-.291	.194	.314	-1.245	70	207	.215	.157	.842	-.285
60	1963	-.200	.102	.120	-.516	70	145	-.262	.177	.394	-1.132	70	208	.227	.166	.824	-.331
60	1964	-.220	.111	.113	-.652	70	146	-.255	.166	.364	-1.079	70	209	.298	.182	.885	-.246
60	1965	-.221	.137	.179	-.657	70	147	-.277	.162	.255	-.812	70	210	.326	.187	1.054	-.237
60	1966	-.219	.139	.218	-.791	70	148	-.278	.162	.217	-1.009	70	211	.279	.198	.999	-.349
60	1967	-.202	.144	.238	-.726	70	149	-.272	.170	.219	-1.095	70	212	-.019	.157	.585	-.613
60	1968	-.171	.118	.166	-.637	70	150	-.287	.180	.189	-1.140	70	213	.216	.158	.753	-.255
70	101	-.343	.193	.215	-1.173	70	151	-.298	.185	.207	-1.200	70	214	.353	.178	.932	-.257
70	102	-.345	.218	.221	-1.384	70	152	-.280	.200	.439	-1.184	70	215	.500	.190	1.086	-.139
70	103	-.306	.220	.261	-1.531	70	153	-.296	.215	.446	-1.381	70	216	.550	.217	1.282	-.080
70	104	-.264	.163	.212	-.844	70	154	-.358	.215	.248	-1.351	70	217	.562	.219	1.295	-.141
70	105	-.281	.151	.212	-.736	70	155	-.348	.214	.148	-1.340	70	218	.499	.214	1.172	-.185
70	106	-.294	.164	.194	-.944	70	156	-.312	.196	.155	-1.184	70	219	.338	.198	1.065	-.239
70	107	-.301	.155	.167	-.962	70	157	-.334	.194	.165	-1.238	70	220	.003	.160	.696	-.531
70	108	-.308	.168	.173	-.981	70	158	-.312	.182	.453	-1.082	70	221	.182	.158	.767	-.328
70	109	-.327	.186	.183	-1.116	70	159	-.251	.166	.230	-.900	70	222	.400	.190	.985	-.164
70	110	-.267	.206	.544	-1.688	70	160	-.171	.181	.534	-1.134	70	223	.484	.196	1.163	-.066
70	111	-.243	.241	.856	-1.610	70	161	-.135	.217	.580	-1.002	70	224	.520	.202	1.231	-.166
70	112	-.175	.257	1.117	-1.372	70	162	-.123	.250	.811	-1.274	70	225	.555	.189	1.300	-.080
70	113	-.134	.283	.908	-1.476	70	163	-.130	.251	.931	-1.111	70	226	.462	.199	1.131	-.057
70	114	-.275	.161	.158	-.866	70	164	-.527	.329	.169	-2.625	70	227	.314	.179	.908	-.269
70	115	-.278	.167	.158	-.855	70	165	-.470	.282	.178	-2.554	70	228	-.009	.150	.521	-.513
70	116	-.278	.155	.190	-.813	70	166	-.344	.201	.244	-1.229	70	229	.163	.152	.656	-.326
70	117	-.289	.159	.196	-.953	70	167	-.265	.172	.330	-.993	70	230	.332	.156	.936	-.217
70	118	-.288	.157	.238	-.853	70	168	-.180	.163	.407	-.791	70	231	.453	.177	.947	-.025
70	119	-.282	.163	.189	-1.157	70	169	-.155	.150	.353	-.830	70	232	.542	.202	1.272	-.169
70	120	-.257	.161	.228	-1.113	70	170	-.155	.142	.398	-.728	70	233	.534	.209	1.186	-.162
70	121	-.228	.169	.407	-.951	70	171	-.155	.170	.434	-.698	70	234	.417	.194	1.140	-.249
70	122	-.219	.185	.576	-.995	70	172	-.195	.165	.360	-.905	70	235	.248	.191	1.018	-.421
70	123	-.176	.209	.835	-.901	70	173	-.196	.158	.465	-.780	70	236	-.027	.146	.467	-.594
70	124	-.254	.152	.235	-.832	70	174	-.351	.172	.229	-1.097	70	237	.145	.153	.639	-.347
70	125	-.237	.167	.315	-.832	70	175	-.283	.170	.164	-.963	70	238	.320	.156	.908	-.265
70	126	-.250	.144	.169	-.759	70	176	-.184	.147	.323	-.669	70	239	.409	.194	1.108	-.130
70	127	-.253	.147	.232	-.753	70	177	-.151	.137	.253	-.804	70	240	.436	.182	1.104	-.057
70	128	-.255	.151	.192	-.895	70	178	-.212	.148	.292	-.751	70	241	.427	.182	1.293	-.110
70	129	-.283	.157	.194	-.882	70	179	-.262	.128	.140	-.769	70	242	.326	.181	1.029	-.355
70	130	-.261	.167	.278	-.850	70	180	-.325	.179	.172	-1.012	70	243	.183	.184	.951	-.340
70	131	-.274	.181	.241	-1.150	70	181	-.174	.145	.293	-.668	70	244	-.024	.139	.505	-.638
70	132	-.285	.200	.253	-1.127	70	182	-.131	.132	.286	-.610	70	245	.124	.151	.612	-.458
70	133	-.263	.205	.493	-1.427	70	183	-.182	.145	.245	-.714	70	246	.245	.149	.745	-.293

WD	TAP	CPMEAN	CPRMS	CPMAX	CPMIN
70	247	.354	.179	.981	-.238
70	248	.381	.178	1.070	-.072
70	249	.381	.183	.952	-.140
70	250	.266	.185	.861	-.367
70	251	.110	.178	.832	-.511
70	252	-.065	.149	.483	-.579
70	253	.083	.139	.612	-.435
70	254	.218	.133	.822	-.189
70	255	.309	.147	.822	-.114
70	256	.315	.150	.887	-.146
70	257	.195	.143	.704	-.307
70	258	.094	.155	.641	-.425
70	259	.038	.175	.849	-.488
70	260	-.060	.135	.459	-.531
70	261	.033	.141	.489	-.444
70	262	.222	.139	.679	-.232
70	263	.363	.167	.909	-.109
70	264	.321	.166	.921	-.144
70	265	.185	.146	.817	-.256
70	266	.266	.145	.871	-.173
70	267	.321	.149	.878	-.070
70	268	.359	.162	.843	-.064
70	269	.421	.178	1.048	-.092
70	270	.370	.168	1.057	-.122
70	271	.336	.170	1.109	-.147
70	272	.062	.162	.687	-.688
70	301	-.205	.152	.272	-.764
70	302	-.224	.157	.306	-.822
70	303	-.235	.158	.227	-.912
70	304	-.177	.139	.315	-.771
70	305	-.151	.156	.310	-.885
70	306	-.461	.232	.205	-1.431
70	307	-.176	.140	.265	-.786
70	308	-.184	.136	.371	-.793
70	309	-.197	.146	.317	-.883
70	310	-.152	.146	.378	-.766
70	311	-.251	.190	.392	-1.159
70	312	-.434	.235	.313	-1.444
70	313	-.179	.145	.281	-.685
70	314	-.173	.140	.293	-.685
70	315	-.186	.146	.234	-.847
70	316	-.233	.160	.247	-.996
70	317	-.316	.233	.394	-1.264
70	318	-.438	.262	.148	-1.401
70	319	-.177	.146	.270	-.800
70	320	-.175	.130	.265	-.771
70	321	-.186	.142	.267	-.732
70	322	-.201	.150	.310	-.764
70	323	-.329	.221	.371	-1.209
70	324	-.431	.253	.155	-1.376
70	325	-.168	.150	.354	-.750
70	326	-.186	.142	.279	-.766
70	327	-.184	.146	.281	-.841
70	328	-.218	.167	.259	-.870
70	329	-.346	.235	.367	-1.293
70	330	-.460	.258	.302	-1.642
70	331	-.191	.146	.270	-.994
70	332	-.185	.142	.326	-.822
70	333	-.178	.132	.243	-.965
70	334	-.245	.105	.024	-.590
70	335	-.321	.213	.241	-1.243
70	336	-.437	.245	.311	-1.410
70	337	-.189	.153	.224	-1.042
70	338	-.177	.147	.336	-.736
70	339	-.175	.143	.304	-.775
70	340	-.211	.171	.274	-.931
70	341	-.361	.228	.380	-1.337
70	342	-.436	.241	.276	-1.449
70	343	-.177	.148	.216	-.782
70	344	-.181	.133	.259	-.753
70	345	-.188	.157	.294	-1.036
70	346	-.183	.165	.331	-1.004
70	347	-.235	.173	.211	-1.080
70	348	-.332	.184	.290	-1.089
70	349	-.173	.134	.223	-.741
70	350	-.188	.143	.221	-.898
70	351	-.251	.175	.246	-1.230
70	352	-.149	.140	.374	-.670
70	353	-.178	.147	.317	-.993
70	354	-.310	.196	.254	-1.140
70	355	-.164	.153	.387	-.769
70	356	-.221	.173	.350	-1.172
70	357	-.217	.173	.384	-.899
70	358	-.245	.169	.259	-1.101
70	401	-.258	.161	.238	-1.090
70	402	-.235	.162	.322	-.874
70	403	-.163	.135	.276	-.653
70	404	-.221	.156	.265	-.842
70	405	-.195	.153	.339	-.901
70	406	-.192	.144	.283	-.943
70	407	-.199	.142	.272	-.685
70	408	-.204	.139	.232	-.708
70	409	-.189	.143	.279	-.705
70	410	-.185	.142	.252	-.730
70	411	-.178	.138	.290	-.689
70	412	-.194	.138	.234	-.806
70	413	-.187	.141	.337	-.853
70	414	-.165	.138	.240	-.697
70	415	-.169	.121	.231	-.596
70	416	-.175	.119	.252	-.585
70	417	-.184	.134	.249	-.668
70	418	-.180	.138	.276	-.679
70	419	-.171	.136	.204	-.786
70	420	-.213	.144	.254	-.943
70	421	-.200	.140	.250	-.809
70	422	-.158	.122	.283	-.799
70	423	-.159	.135	.326	-.631
70	424	-.156	.116	.245	-.695
70	425	-.160	.137	.274	-.635
70	426	-.173	.137	.274	-.667
70	427	-.165	.141	.292	-.831
70	428	-.210	.143	.214	-.786
70	429	-.205	.148	.202	-.719
70	430	-.174	.133	.227	-.719
70	431	-.166	.124	.178	-.561
70	432	-.167	.126	.250	-1.051
70	433	-.152	.121	.227	-.645
70	434	-.160	.143	.265	-.739
70	435	-.166	.139	.295	-.651
70	436	-.218	.143	.281	-.815
70	437	-.219	.156	.277	-.744
70	438	-.186	.145	.249	-.651
70	439	-.166	.130	.322	-.710
70	440	-.177	.128	.292	-.624
70	441	-.184	.133	.211	-.683
70	442	-.183	.125	.185	-.638
70	443	-.172	.137	.270	-.775
70	444	-.208	.138	.197	-.786
70	445	-.199	.142	.272	-.734
70	446	-.209	.136	.182	-.779
70	447	-.184	.137	.294	-.688
70	448	-.181	.148	.358	-.857
70	449	-.179	.144	.258	-.792
70	450	-.190	.149	.251	-.964
70	451	-.168	.144	.313	-.801
70	452	-.209	.146	.286	-.975
70	453	-.202	.141	.295	-.885
70	454	-.195	.144	.324	-.795
70	455	-.159	.160	.490	-.801
70	456	-.206	.155	.299	-.862
70	457	-.177	.139	.328	-.833
70	458	-.175	.139	.209	-.873
70	459	-.181	.143	.209	-.817
70	460	-.167	.159	.384	-.783
70	461	-.179	.163	.360	-.884
70	462	-.188	.161	.363	-.744
70	463	-.166	.139	.265	-.640
70	464	-.184	.148	.397	-.796
70	465	-.197	.169	.246	-1.057
70	466	-.147	.162	.400	-.822

WD	TAP	CPMEAN	CPRMS	CPMAX	CPMIN
70	467	-.141	.161	.367	-.925
70	468	-.157	.142	.276	-.977
70	469	-.174	.149	.361	-1.029
70	470	-.177	.153	.296	-.767
70	471	-.176	.140	.230	-.780
70	472	-.229	.158	.195	-1.383
70	501	-.308	.227	.286	-1.820
70	502	-.297	.197	.263	-1.261
70	503	-.241	.185	.434	-1.005
70	504	-.215	.184	.394	-1.229
70	505	-.288	.195	.468	-1.335
70	506	-.244	.181	.389	-1.033
70	507	-.221	.163	.317	-1.016
70	508	-.237	.166	.243	-.912
70	509	-.286	.185	.335	-1.405
70	510	-.261	.170	.260	-1.063
70	511	-.257	.170	.423	-1.131
70	512	-.251	.172	.245	-1.360
70	513	-.282	.182	.249	-1.344
70	514	-.278	.171	.249	-1.007
70	515	-.268	.174	.188	-1.245
70	516	-.285	.200	.207	-1.286
70	517	-.295	.191	.269	-1.205
70	518	-.276	.177	.286	-1.006
70	519	-.263	.170	.258	-.963
70	520	-.270	.181	.175	-1.006
70	521	-.369	.242	.240	-1.730
70	522	-.306	.222	.249	-1.850
70	523	-.243	.160	.241	-1.090
70	524	-.216	.150	.250	-.767
70	525	-.309	.215	.311	-1.441
70	526	-.272	.162	.183	-.988
70	527	-.253	.156	.228	-.828
70	528	-.251	.151	.216	-.834
70	529	-.280	.149	.148	-1.025
70	530	-.262	.141	.157	-.787
70	531	-.240	.158	.241	-.904
70	532	-.200	.144	.337	-1.008
70	533	-.209	.139	.257	-.728
70	534	-.187	.134	.177	-.694
70	601	-.510	.269	.239	-2.198
70	602	-.473	.258	.324	-2.127
70	603	-.358	.219	.274	-1.283
70	604	-.344	.197	.233	-1.324
70	605	-.471	.232	.170	-1.475
70	606	-.480	.226	.220	-1.659
70	607	-.406	.229	.228	-1.510
70	608	-.361	.203	.221	-1.403
70	609	-.456	.255	.201	-1.833
70	610	-.448	.233	.166	-1.670
70	611	-.381	.224	.334	-1.440
70	612	-.354	.230	.319	-1.730
70	613	-.439	.234	.103	-1.789
70	614	-.477	.255	.101	-1.646
70	615	-.407	.250	.258	-1.656
70	616	-.371	.247	.330	-2.178
70	617	-.490	.268	.430	-1.733
70	618	-.506	.261	.249	-1.499
70	619	-.391	.252	.275	-1.665
70	620	-.379	.255	.263	-1.929
70	621	-.511	.241	.077	-1.868
70	622	-.536	.268	.457	-1.852
70	623	-.430	.266	.282	-1.586
70	624	-.391	.262	.206	-2.169
70	625	-.490	.280	.199	-2.123
70	626	-.457	.271	.336	-1.918
70	627	-.347	.254	.446	-1.405
70	628	-.341	.189	.141	-1.121
70	629	-.382	.213	.273	-1.153
70	630	-.367	.244	.275	-1.462
70	631	-.395	.210	.378	-1.388
70	632	-.354	.214	.214	-1.338
70	633	-.400	.267	.485	-1.419
70	634	-.067	.277	.542	-1.201
70	801	-.261	.188	.228	-1.114
70	802	-.194	.157	.317	-.749
70	803	-.182	.145	.295	-.727
70	804	-.428	.219	.155	-1.480
70	805	-.320	.171	.155	-1.111
70	806	-.377	.215	.223	-1.262
70	807	-.391	.212	.232	-1.231
70	808	-.377	.226	.275	-1.155
70	809	-.211	.184	.422	-1.098
70	810	-.282	.181	.208	-.924
70	811	-.206	.138	.195	-.865
70	812	-.211	.147	.312	-.791
70	813	-.255	.140	.276	-.802
70	814	-.280	.149	.140	-1.030
70	815	-.238	.143	.232	-.771
70	901	-.214	.150	.235	-1.086
70	902	-.223	.161	.366	-.839
70	903	-.217	.176	.261	-1.038
70	904	-.177	.179	.524	-.807
70	905	-.193	.158	.324	-.754
70	906	-.268	.192	.302	-1.290
70	907	-.244	.186	.245	-1.150
70	908	-.262	.188	.318	-1.022
70	909	-.330	.186	.151	-1.047
70	910	-.342	.195	.134	-1.265
70	911	-.278	.197	.276	-1.304
70	912	-.220	.174	.382	-.891
70	913	-.348	.191	.263	-1.189
70	914	-.327	.185	.196	-1.168
70	915	-.225	.174	.527	-.937
70	916	-.331	.175	.226	-1.189
70	917	-.345	.173	.164	-1.059
70	918	-.337	.190	.182	-1.343
70	919	-.172	.187	.723	-1.015
70	920	-.130	.180	.597	-.887
70	921	-.127	.162	.462	-.704
70	1101	-.200	.153	.250	-1.195
70	1102	.279	.178	.920	-.316
70	1103	-.073	.150	.636	-.801
70	1104	-.029	.169	.501	-.701
70	1105	-.036	.170	.531	-.848
70	1106	-.101	.167	.659	-.666
70	1107	-.176	.142	.364	-.618
70	1108	.100	.139	.703	-.394
70	1109	-.130	.132	.448	-.581
70	1110	-.302	.164	.168	-.919
70	1111	.132	.170	.933	-.480
70	1112	.134	.140	.622	-.374
70	1113	-.032	.155	.587	-.585
70	1114	.198	.149	.907	-.227
70	1115	-.197	.115	.210	-.566
70	1116	-.146	.134	.367	-.607
70	1117	.056	.123	.524	-.426
70	1118	.179	.145	.676	-.419
70	1119	.090	.152	.523	-.542
70	1120	.014	.127	.438	-.465
70	1121	.111	.157	.639	-.353
70	1122	.288	.154	.843	-.262
70	1123	.088	.133	.569	-.418
70	1124	-.047	.131	.479	-.532
70	1125	.126	.121	.603	-.342
70	1126	-.169	.140	.270	-.687
70	1201	-.307	.154	.125	-1.041
70	1202	-.355	.172	.112	-1.070
70	1203	-.356	.194	.212	-1.240
70	1204	.096	.151	.696	-.484
70	1205	-.322	.202	.156	-1.164
70	1206	-.237	.156	.267	-.923
70	1207	-.138	.143	.355	-.622
70	1208	-.215	.148	.209	-.717
70	1209	-.166	.144	.319	-.768
70	1210	-.275	.144	.147	-.883
70	1211	-.163	.136	.332	-.621
70	1212	-.121	.136	.299	-.589
70	1213	-.217	.177	.327	-1.197
70	1214	-.243	.144	.213	-.698

WD	TAP	CPMEAN	CPRMS	CPMAX	CPMIN
70	1215	-.121	.134	.288	-.523
70	1216	-.182	.137	.203	-.628
70	1217	-.058	.132	.468	-.574
70	1218	-.025	.140	.422	-.519
70	1219	.063	.158	.659	-.509
70	1220	-.256	.169	.209	-.868
70	1221	-.127	.123	.300	-.568
70	1222	.073	.127	.550	-.382
70	1223	.307	.159	.838	-.133
70	1224	-.133	.128	.229	-.550
70	1225	-.096	.141	.427	-.579
70	1226	-.288	.148	.149	-.849
70	1227	.160	.144	.732	-.374
70	1228	.360	.177	1.409	-.091
70	1229	.132	.133	.786	-.294
70	1301	-.257	.138	.140	-.922
70	1302	-.289	.157	.190	-.827
70	1303	-.304	.163	.195	-.926
70	1304	-.240	.129	.219	-.828
70	1305	-.221	.133	.158	-.903
70	1306	-.221	.141	.221	-.757
70	1307	-.223	.124	.175	-.643
70	1308	-.258	.152	.231	-.788
70	1309	-.181	.139	.303	-.748
70	1311	-.199	.119	.160	-.624
70	1312	-.206	.115	.200	-.631
70	1313	-.193	.124	.279	-.691
70	1314	-.167	.125	.267	-.677
70	1315	-.192	.141	.275	-.832
70	1316	-.264	.145	.267	-.803
70	1317	-.180	.113	.219	-.580
70	1318	-.203	.123	.199	-.683
70	1319	-.180	.132	.198	-.656
70	1320	-.164	.123	.321	-.601
70	1321	-.164	.129	.228	-.639
70	1322	-.178	.130	.271	-.669
70	1323	-.279	.148	.255	-.780
70	1324	-.162	.116	.201	-.651
70	1325	-.189	.134	.191	-.703
70	1326	-.154	.113	.245	-.508
70	1327	-.164	.114	.189	-.559
70	1328	-.186	.127	.254	-.664
70	1329	-.314	.165	.176	-1.070
70	1330	-.206	.141	.288	-.714
70	1331	-.213	.140	.295	-.756
70	1401	-.271	.146	.159	-1.065
70	1402	-.332	.169	.129	-.986
70	1403	-.293	.139	.166	-.864
70	1404	-.278	.143	.178	-.770
70	1405	-.326	.179	.194	-1.461
70	1406	-.360	.163	.124	-1.082
70	1407	-.311	.186	.166	-.939
70	1408	-.201	.126	.274	-.579
70	1409	-.273	.189	.298	-1.031
70	1410	.070	.161	.627	-.444
70	1411	-.264	.128	.120	-.665
70	1412	-.257	.136	.130	-.756
70	1413	-.317	.176	.232	-.949
70	1414	-.288	.197	.225	-1.020
70	1415	-.220	.171	.298	-.917
70	1416	-.318	.157	.122	-.949
70	1417	-.264	.137	.095	-.754
70	1418	-.178	.129	.278	-.615
70	1419	-.164	.113	.286	-.525
70	1420	-.210	.136	.279	-.663
70	1421	-.216	.132	.190	-.709
70	1422	-.389	.175	.078	-1.296
70	1423	-.299	.153	.193	-.940
70	1424	-.285	.156	.166	-.895
70	1425	-.199	.118	.334	-.605
70	1426	-.123	.135	.295	-.586
70	1427	-.289	.153	.152	-.813
70	1428	-.197	.146	.247	-.725
70	1429	-.173	.117	.176	-.669
70	1430	-.146	.119	.234	-.552
70	1431	-.130	.127	.237	-.588
70	1432	-.081	.124	.322	-.458
70	1433	-.161	.112	.191	-.574
70	1434	-.351	.172	.173	-1.005
70	1435	-.200	.143	.235	-.771
70	1901	-.265	.156	.173	-.795
70	1902	-.255	.178	.176	-1.040
70	1903	.188	.110	.575	-.376
70	1904	-.375	.176	.103	-1.108
70	1905	-.020	.118	.374	-.393
70	1906	-.009	.113	.437	-.391
70	1907	-.375	.192	.193	-1.249
70	1908	-.384	.195	.259	-1.385
70	1909	-.418	.184	.087	-1.094
70	1910	-.408	.194	.069	-1.256
70	1911	.057	.130	.658	-.352
70	1912	.062	.139	.551	-.519
70	1913	-.390	.232	.277	-1.568
70	1914	-.374	.169	.040	-1.093
70	1915	-.025	.116	.415	-.366
70	1916	-.508	.265	.128	-1.554
70	1917	-.364	.179	.354	-1.127
70	1918	-.360	.152	.050	-1.228
70	1919	-.379	.177	.108	-1.422
70	1920	-.201	.159	.250	-.947
70	1921	-.234	.126	.191	-.665
70	1922	-.282	.188	.423	-.957
70	1923	-.269	.261	.547	-1.408
70	1924	-.384	.211	.313	-1.315
70	1925	-.337	.158	.091	-.947
70	1926	-.170	.134	.184	-.738
70	1927	-.137	.130	.254	-.805
70	1928	-.121	.140	.465	-.894
70	1929	-.111	.180	.477	-.793
70	1930	-.318	.167	.185	-.949
70	1931	-.386	.172	.069	-1.126
70	1932	-.358	.175	.113	-1.069
70	1933	-.180	.123	.173	-.597
70	1934	-.159	.121	.228	-.597
70	1935	-.167	.130	.295	-.686
70	1936	-.237	.154	.263	-.831
70	1937	-.274	.130	.130	-.750
70	1938	-.266	.142	.124	-.952
70	1939	-.313	.139	.220	-.822
70	1940	-.255	.127	.181	-.819
70	1941	-.247	.126	.134	-.674
70	1942	-.241	.118	.160	-.697
70	1943	-.268	.139	.136	-.868
70	1944	-.303	.129	.076	-.975
70	1945	-.271	.132	.189	-.750
70	1946	-.268	.133	.208	-.916
70	1947	-.253	.136	.108	-.757
70	1948	-.270	.139	.237	-.824
70	1949	-.249	.134	.135	-.828
70	1950	-.272	.124	.140	-.742
70	1951	-.220	.138	.270	-.901
70	1952	-.258	.133	.111	-.841
70	1953	-.275	.136	.099	-.753
70	1954	-.262	.132	.087	-1.064
70	1955	-.269	.138	.109	-.779
70	1956	-.178	.138	.289	-.648
70	1957	-.255	.142	.147	-.754
70	1958	-.256	.143	.128	-.742
70	1959	-.253	.138	.178	-1.045
70	1960	-.241	.143	.224	-.836
70	1961	-.198	.121	.162	-.662
70	1962	-.187	.117	.138	-.725
70	1963	-.205	.113	.130	-.621
70	1964	-.224	.124	.149	-.742
70	1965	-.259	.132	.176	-.759
70	1966	-.269	.130	.104	-.814
70	1967	-.259	.141	.220	-.901
70	1968	-.200	.127	.149	-.691
80	101	-.287	.157	.252	-1.230
80	102	-.296	.187	.227	-1.493

WD	TAP	CPMEAN	CPRMS	CPMAX	CPMIN	WD	TAP	CPMEAN	CPRMS	CPMAX	CPMIN	WD	TAP	CPMEAN	CPRMS	CPMAX	CPMIN
80	103	-.308	.198	.165	-1.182	80	153	-.339	.181	.331	-1.386	80	216	.530	.207	1.213	-.209
80	104	-.252	.157	.293	-.840	80	154	-.352	.200	.164	-1.433	80	217	.531	.205	1.213	-.646
80	105	-.250	.151	.195	-.808	80	155	-.324	.182	.213	-1.454	80	218	.404	.208	1.298	-.248
80	106	-.272	.150	.151	-.845	80	156	-.332	.201	.161	-1.291	80	219	.282	.185	1.114	-.266
80	107	-.260	.143	.147	-.931	80	157	-.311	.190	.186	-1.147	80	220	.073	.175	.740	-.511
80	108	-.273	.153	.224	-.916	80	158	-.278	.158	.198	-.938	80	221	.278	.174	.834	-.245
80	109	-.271	.158	.225	-.911	80	159	-.254	.153	.382	-.850	80	222	.472	.199	1.313	-.138
80	110	-.292	.185	.147	-1.429	80	160	-.224	.156	.341	-.850	80	223	.582	.187	1.217	-.019
80	111	-.288	.194	.252	-1.386	80	161	-.227	.167	.357	-1.007	80	224	.572	.209	1.268	-.083
80	112	-.280	.192	.429	-1.431	80	162	-.189	.205	.715	-1.004	80	225	.528	.204	1.140	-.134
80	113	-.274	.191	.653	-1.372	80	163	-.208	.225	.959	-1.400	80	226	.405	.182	1.160	-.385
80	114	-.233	.150	.199	-.872	80	164	-.470	.298	.173	-2.869	80	227	.220	.170	.760	-.300
80	115	-.226	.142	.217	-.845	80	165	-.400	.239	.234	-1.768	80	228	.022	.173	.866	-.533
80	116	-.238	.142	.261	-.799	80	166	-.365	.183	.145	-1.208	80	229	.231	.164	.834	-.170
80	117	-.259	.160	.245	-.906	80	167	-.296	.178	.220	-1.131	80	230	.430	.191	1.256	-.065
80	118	-.255	.149	.147	-.826	80	168	-.236	.151	.365	-.818	80	231	.512	.204	1.314	-.008
80	119	-.252	.157	.192	-.909	80	169	-.208	.157	.241	-.813	80	232	.516	.194	1.103	-.040
80	120	-.260	.152	.147	-1.269	80	170	-.197	.147	.288	-.731	80	233	.488	.177	1.458	.033
80	121	-.261	.170	.261	-1.117	80	171	-.200	.148	.354	-.982	80	234	.347	.177	.993	-.150
80	122	-.274	.170	.227	-1.003	80	172	-.207	.138	.217	-.753	80	235	.204	.163	.767	-.350
80	123	-.263	.182	.459	-1.124	80	173	-.238	.147	.423	-.951	80	236	.009	.171	.669	-.593
80	124	-.252	.144	.169	-.831	80	174	-.395	.186	.187	-1.075	80	237	.197	.169	.831	-.373
80	125	-.235	.141	.185	-.744	80	175	-.317	.172	.234	-1.052	80	238	.376	.169	.980	-.124
80	126	-.228	.134	.259	-.722	80	176	-.210	.140	.243	-.693	80	239	.448	.191	1.357	-.074
80	127	-.234	.158	.288	-.788	80	177	-.177	.123	.182	-.635	80	240	.485	.183	1.085	-.046
80	128	-.247	.151	.316	-.829	80	178	-.177	.130	.177	-.648	80	241	.431	.178	1.149	-.063
80	129	-.246	.143	.222	-.968	80	179	-.221	.139	.296	-.666	80	242	.310	.171	.913	-.261
80	130	-.240	.145	.207	-.727	80	180	-.364	.171	.186	-.941	80	243	.140	.157	.738	-.405
80	131	-.268	.165	.214	-1.213	80	181	-.199	.135	.217	-.688	80	244	-.026	.175	.826	-.575
80	132	-.256	.166	.195	-1.277	80	182	-.131	.123	.299	-.504	80	245	.148	.149	.657	-.287
80	133	-.271	.182	.231	-1.324	80	183	-.150	.123	.201	-.562	80	246	.279	.150	.757	-.170
80	134	-.265	.168	.313	-1.216	80	184	-.435	.206	.057	-1.340	80	247	.359	.155	1.001	-.077
80	135	-.243	.152	.343	-.770	80	185	-.123	.142	.425	-.641	80	248	.347	.164	.884	-.165
80	136	-.243	.146	.254	-.807	80	186	-.132	.129	.222	-.543	80	249	.314	.146	.827	-.088
80	137	-.234	.134	.191	-.802	80	187	-.164	.131	.251	-.583	80	250	.189	.153	.858	-.316
80	138	-.256	.150	.197	-.941	80	201	.472	.227	1.428	-.266	80	251	.063	.155	.697	-.416
80	139	-.269	.150	.164	-.923	80	202	-.384	.209	.374	-1.245	80	252	-.057	.150	.475	-.590
80	140	-.263	.165	.175	-1.157	80	203	-.308	.178	.303	-1.007	80	253	.097	.136	.616	-.347
80	141	-.275	.162	.182	-1.025	80	204	.209	.184	.881	-.325	80	254	.256	.134	.802	-.122
80	142	-.271	.158	.211	-1.095	80	205	.286	.189	.980	-.261	80	255	.347	.154	.940	-.152
80	143	-.281	.164	.204	-1.097	80	206	.267	.180	.833	-.440	80	256	.293	.143	.824	-.077
80	144	-.283	.162	.250	-1.338	80	207	.255	.160	.778	-.209	80	257	.152	.142	.698	-.372
80	145	-.266	.166	.161	-1.045	80	208	.236	.172	.856	-.442	80	258	.035	.144	.644	-.619
80	146	-.275	.153	.177	-.943	80	209	.287	.181	.959	-.385	80	259	-.027	.155	.566	-.645
80	147	-.274	.144	.222	-.845	80	210	.294	.175	.854	-.316	80	260	-.078	.131	.408	-.638
80	148	-.259	.154	.173	-.925	80	211	.230	.171	.813	-.213	80	261	.025	.125	.445	-.377
80	149	-.276	.159	.209	-1.034	80	212	.086	.202	.913	-.661	80	262	.222	.128	.755	-.134
80	150	-.282	.160	.181	-.882	80	213	.319	.186	1.096	-.254	80	263	.334	.146	.884	-.055
80	151	-.297	.164	.198	-1.072	80	214	.428	.189	1.094	-.086	80	264	.258	.129	.703	-.201
80	152	-.321	.182	.340	-1.163	80	215	.538	.212	1.489	-.165	80	265	.151	.129	.586	-.246

WD	TAP	CPMEAN	CPRMS	CPMAX	CPMIN
80	266	.238	.138	.831	-.160
80	267	.288	.137	.812	-.110
80	268	.342	.152	1.068	-.126
80	269	.357	.154	1.044	-.084
80	270	.346	.151	1.011	-.138
80	271	.307	.138	.918	-.096
80	272	.003	.136	.501	-.563
80	301	-.189	.144	.282	-.708
80	302	-.224	.149	.364	-.806
80	303	-.235	.162	.219	-1.102
80	304	-.129	.137	.458	-.693
80	305	-.055	.158	.500	-.637
80	306	-.318	.240	.541	-1.205
80	307	-.191	.140	.232	-.721
80	308	-.186	.127	.265	-.728
80	309	-.189	.136	.281	-.832
80	310	-.096	.138	.390	-.635
80	311	-.127	.194	.473	-.920
80	312	-.318	.251	.551	-1.410
80	313	-.180	.129	.215	-.643
80	314	-.181	.141	.338	-.783
80	315	-.184	.138	.333	-.846
80	316	-.156	.136	.434	-.991
80	317	-.290	.256	.369	-1.373
80	318	-.413	.272	.611	-1.546
80	319	-.188	.133	.237	-.792
80	320	-.175	.144	.281	-.749
80	321	-.200	.124	.286	-.674
80	322	-.189	.158	.269	-.776
80	323	-.306	.262	.378	-1.469
80	324	-.499	.268	.345	-1.460
80	325	-.204	.124	.213	-.714
80	326	-.200	.134	.319	-.828
80	327	-.213	.135	.267	-.757
80	328	-.180	.152	.270	-.944
80	329	-.292	.233	.346	-1.244
80	330	-.431	.250	.357	-1.631
80	331	-.224	.144	.182	-.804
80	332	-.216	.138	.308	-.728
80	333	-.240	.155	.239	-1.401
80	334	-.193	.092	.048	-.583
80	335	-.323	.256	.340	-1.460
80	336	-.464	.264	.388	-1.723
80	337	-.244	.151	.224	-.782
80	338	-.258	.152	.210	-.879
80	339	-.259	.161	.255	-1.301
80	340	-.210	.166	.246	-1.022
80	341	-.324	.227	.339	-1.637
80	342	-.458	.254	.371	-1.569
80	343	-.249	.147	.224	-.778
80	344	-.257	.161	.143	-.999
80	345	-.275	.175	.235	-1.113
80	346	-.208	.165	.304	-.775
80	347	-.232	.182	.308	-.914
80	348	-.376	.207	.355	-1.298
80	349	-.215	.144	.287	-.678
80	350	-.240	.145	.218	-.767
80	351	-.347	.190	.131	-1.209
80	352	-.185	.146	.245	-.665
80	353	-.198	.168	.259	-.862
80	354	-.377	.226	.247	-1.436
80	355	-.240	.174	.249	-.942
80	356	-.294	.175	.169	-1.436
80	357	-.286	.188	.411	-1.147
80	358	-.342	.179	.278	-.983
80	401	-.253	.159	.195	-.686
80	402	-.242	.162	.205	-.999
80	403	-.164	.135	.271	-.674
80	404	-.242	.172	.196	-1.078
80	405	-.222	.156	.212	-.898
80	406	-.217	.157	.367	-.940
80	407	-.206	.138	.249	-.728
80	408	-.209	.137	.367	-.834
80	409	-.212	.140	.222	-.726
80	410	-.185	.128	.262	-.592
80	411	-.180	.134	.256	-.729
80	412	-.217	.139	.206	-.811
80	413	-.209	.156	.231	-1.098
80	414	-.183	.138	.297	-.806
80	415	-.191	.132	.199	-.722
80	416	-.193	.126	.231	-.668
80	417	-.172	.133	.271	-.604
80	418	-.175	.126	.309	-.632
80	419	-.172	.134	.238	-.694
80	420	-.202	.146	.278	-.729
80	421	-.192	.124	.292	-.611
80	422	-.188	.133	.210	-.614
80	423	-.185	.132	.269	-.733
80	424	-.183	.123	.212	-.595
80	425	-.174	.127	.283	-.693
80	426	-.178	.129	.376	-.618
80	427	-.178	.132	.292	-.640
80	428	-.229	.140	.236	-.740
80	429	-.201	.136	.362	-.682
80	430	-.183	.136	.259	-.670
80	431	-.198	.128	.238	-.752
80	432	-.187	.123	.205	-.595
80	433	-.191	.129	.245	-.829
80	434	-.193	.137	.308	-.665
80	435	-.202	.144	.283	-.816
80	436	-.248	.147	.193	-.959
80	437	-.238	.140	.140	-.825
80	438	-.230	.126	.235	-.801
80	439	-.223	.137	.247	-.827
80	440	-.235	.137	.207	-.776
80	441	-.216	.127	.214	-.625
80	442	-.217	.141	.275	-.942
80	443	-.206	.128	.250	-.858
80	444	-.224	.139	.272	-.706
80	445	-.215	.148	.278	-.934
80	446	-.220	.127	.191	-.694
80	447	-.224	.145	.130	-.971
80	448	-.264	.155	.130	-1.508
80	449	-.239	.146	.203	-.938
80	450	-.237	.151	.156	-.852
80	451	-.225	.128	.170	-.752
80	452	-.169	.137	.556	-.684
80	453	-.137	.133	.307	-.734
80	454	-.120	.137	.356	-.590
80	455	-.157	.146	.304	-.771
80	456	-.298	.181	.154	-1.452
80	457	-.261	.155	.166	-1.129
80	458	-.235	.164	.250	-.847
80	459	-.246	.164	.248	-1.263
80	460	-.125	.142	.389	-.670
80	461	-.135	.153	.440	-.727
80	462	-.242	.153	.197	-1.026
80	463	-.243	.149	.112	-.919
80	464	-.232	.157	.268	-.897
80	465	-.256	.151	.249	-.867
80	466	-.115	.167	.554	-.841
80	467	-.128	.156	.736	-.721
80	468	-.212	.145	.256	-.833
80	469	-.228	.153	.259	-.878
80	470	-.231	.139	.230	-.710
80	471	-.221	.152	.195	-.881
80	472	-.180	.138	.277	-.701
80	501	-.268	.176	.389	-1.052
80	502	-.250	.164	.254	-.968
80	503	-.251	.154	.233	-1.101
80	504	-.262	.180	.187	-1.244
80	505	-.263	.166	.455	-1.195
80	506	-.257	.160	.246	-1.136
80	507	-.257	.158	.213	-.877
80	508	-.256	.174	.342	-1.152
80	509	-.233	.145	.239	-.875
80	510	-.248	.146	.226	-1.200
80	511	-.246	.163	.278	-1.310
80	512	-.293	.192	.354	-1.393
80	513	-.297	.154	.281	-.828

WD	TAP	CPMEAN	CPRMS	CPMAX	CPMIN
80	514	-.280	.151	.217	-.919
80	515	-.263	.166	.217	-1.237
80	516	-.271	.173	.243	-1.021
80	517	-.308	.172	.151	-1.233
80	518	-.276	.169	.161	-1.186
80	519	-.287	.170	.262	-1.188
80	520	-.278	.160	.236	-1.308
80	521	-.293	.189	.260	-1.360
80	522	-.261	.179	.245	-1.205
80	523	-.214	.141	.180	-.885
80	524	-.208	.138	.190	-1.030
80	525	-.219	.151	.218	-.890
80	526	-.225	.140	.143	-.750
80	527	-.219	.139	.281	-.731
80	528	-.190	.149	.221	-1.140
80	529	-.236	.138	.192	-.681
80	530	-.227	.144	.186	-.854
80	531	-.165	.120	.252	-.584
80	532	-.167	.128	.264	-.693
80	533	-.155	.123	.245	-.537
80	534	-.164	.123	.252	-.612
80	601	-.299	.166	.157	-1.410
80	602	-.325	.174	.174	-1.361
80	603	-.293	.154	.135	-1.023
80	604	-.318	.173	.252	-1.140
80	605	-.286	.154	.180	-1.078
80	606	-.305	.174	.205	-1.218
80	607	-.298	.154	.164	-1.175
80	608	-.311	.169	.205	-1.296
80	609	-.298	.163	.114	-1.169
80	610	-.307	.163	.188	-1.043
80	611	-.319	.176	.214	-1.080
80	612	-.310	.185	.173	-1.260
80	613	-.302	.168	.161	-1.166
80	614	-.326	.179	.123	-1.238
80	615	-.317	.181	.252	-1.969
80	616	-.335	.182	.242	-1.277
80	617	-.383	.205	.113	-1.639
80	618	-.369	.182	.164	-1.497
80	619	-.349	.192	.159	-1.549
80	620	-.362	.196	.193	-1.542
80	621	-.436	.215	.204	-1.616
80	622	-.415	.208	.118	-1.592
80	623	-.421	.210	.149	-1.346
80	624	-.423	.221	.162	-1.496
80	625	-.434	.220	.084	-2.100
80	626	-.436	.211	.131	-1.360
80	627	-.361	.207	.106	-1.425
80	628	-.357	.189	.154	-1.348
80	629	-.388	.188	.178	-1.081

WD	TAP	CPMEAN	CPRMS	CPMAX	CPMIN
80	630	-.396	.195	.083	-1.331
80	631	-.413	.192	.121	-1.191
80	632	-.428	.200	.094	-1.386
80	633	-.449	.215	.193	-1.472
80	634	-.169	.270	.549	-.921
80	801	-.316	.196	.183	-1.181
80	802	-.225	.140	.279	-.911
80	803	-.184	.132	.176	-.649
80	804	-.411	.185	.080	-1.336
80	805	-.308	.160	.252	-.892
80	806	-.410	.204	.176	-1.269
80	807	-.410	.190	.063	-1.260
80	808	-.425	.183	.126	-1.202
80	809	-.210	.144	.202	-.703
80	810	-.177	.129	.267	-.622
80	811	-.184	.140	.195	-.820
80	812	-.165	.121	.211	-.555
80	813	-.205	.127	.247	-.605
80	814	-.261	.135	.149	-.708
80	815	-.186	.132	.207	-.679
80	901	-.221	.172	.296	-1.019
80	902	-.224	.175	.472	-.962
80	903	-.235	.178	.326	-1.172
80	904	-.157	.171	.550	-.870
80	905	-.192	.147	.284	-.782
80	906	-.275	.182	.248	-1.113
80	907	-.236	.177	.256	-1.074
80	908	-.254	.167	.188	-1.152
80	909	-.270	.161	.240	-1.104
80	910	-.305	.183	.248	-1.296
80	911	-.271	.185	.217	-1.399
80	912	-.241	.161	.408	-1.039
80	913	-.294	.163	.169	-.971
80	914	-.287	.166	.424	-.945
80	915	-.240	.168	.387	-1.198
80	916	-.281	.149	.199	-.989
80	917	-.287	.158	.224	-.884
80	918	-.285	.156	.181	-.890
80	919	-.210	.157	.490	-.757
80	920	-.224	.183	.552	-1.498
80	921	-.214	.174	.456	-.877
80	1101	-.215	.152	.206	-.989
80	1102	.244	.199	.975	-.532
80	1103	-.126	.141	.508	-.807
80	1104	-.098	.173	.603	-.642
80	1105	-.135	.168	.399	-.736
80	1106	-.169	.190	.606	-.843
80	1107	-.245	.160	.412	-.909
80	1108	.106	.147	.705	-.364
80	1109	-.132	.124	.411	-.603

WD	TAP	CPMEAN	CPRMS	CPMAX	CPMIN
80	1110	-.356	.171	.155	-1.066
80	1111	.131	.176	.737	-.640
80	1112	.080	.147	.606	-.416
80	1113	-.069	.171	.645	-.606
80	1114	.195	.159	.912	-.399
80	1115	-.202	.135	.232	-.717
80	1116	-.184	.135	.247	-.616
80	1117	.094	.132	.434	-.714
80	1118	.158	.152	.845	-.598
80	1119	.030	.172	.613	-.637
80	1120	-.021	.146	.583	-.532
80	1121	.058	.142	.660	-.430
80	1122	.320	.162	1.231	-.114
80	1123	.064	.128	.562	-.390
80	1124	-.069	.135	.384	-.648
80	1125	.140	.123	.649	-.278
80	1126	-.204	.137	.201	-.737
80	1201	-.248	.153	.179	-.829
80	1202	-.292	.199	.294	-1.286
80	1203	-.266	.206	.256	-1.162
80	1204	.058	.179	.646	-.614
80	1205	-.231	.185	.278	-1.619
80	1206	-.181	.156	.258	-.968
80	1207	-.167	.139	.392	-.680
80	1208	-.208	.131	.158	-.678
80	1209	-.201	.135	.197	-.722
80	1210	-.299	.159	.183	-.866
80	1211	-.179	.130	.211	-.576
80	1212	-.129	.123	.308	-.576
80	1213	-.222	.162	.285	-.894
80	1214	-.201	.150	.282	-.826
80	1215	-.153	.131	.213	-.618
80	1216	-.234	.144	.210	-.657
80	1217	-.084	.135	.295	-.625
80	1218	-.041	.142	.327	-.692
80	1219	.047	.166	.561	-.724
80	1220	-.285	.152	.086	-.948
80	1221	-.150	.126	.292	-.663
80	1222	.044	.137	.492	-.419
80	1223	.340	.159	1.036	-.197
80	1224	-.108	.124	.307	-.521
80	1225	-.133	.135	.318	-.637
80	1226	-.305	.161	.101	-1.042
80	1227	.108	.127	.519	-.341
80	1228	.366	.175	1.205	-.168
80	1229	.128	.129	.645	-.309
80	1301	-.226	.153	.206	-.806
80	1302	-.243	.157	.193	-1.057
80	1303	-.255	.159	.214	-.975
80	1304	-.221	.128	.212	-.716

WD	TAP	CPMEAN	CPRMS	CPMAX	CPMIN
80	1305	-.168	.133	.335	-.705
80	1306	-.173	.136	.294	-.650
80	1307	-.198	.130	.212	-.671
80	1308	-.222	.154	.185	-.809
80	1309	-.182	.130	.251	-.635
80	1311	-.151	.127	.243	-.628
80	1312	-.180	.131	.229	-.606
80	1313	-.179	.126	.277	-.594
80	1314	-.153	.132	.165	-.698
80	1315	-.225	.143	.243	-.727
80	1316	-.301	.149	.104	-.745
80	1317	-.143	.141	.431	-.618
80	1318	-.186	.110	.223	-.602
80	1319	-.138	.117	.204	-.524
80	1320	-.119	.123	.275	-.565
80	1321	-.174	.137	.242	-.610
80	1322	-.189	.126	.223	-.700
80	1323	-.318	.156	.203	-.871
80	1324	-.129	.125	.336	-.593
80	1325	-.148	.141	.331	-.680
80	1326	-.116	.128	.318	-.602
80	1327	-.154	.126	.264	-.661
80	1328	-.165	.117	.149	-.636
80	1329	-.345	.159	.132	-1.004
80	1330	-.144	.126	.310	-.591
80	1331	-.145	.124	.329	-.553
80	1401	-.236	.165	.181	-.919
80	1402	-.272	.166	.267	-.988
80	1403	-.237	.165	.218	-.870
80	1404	-.208	.155	.242	-.873
80	1405	-.303	.193	.230	-1.161
80	1406	-.278	.202	.305	-1.227
80	1407	-.225	.173	.208	-1.062
80	1408	-.172	.130	.195	-.572
80	1409	-.296	.168	.152	-1.103
80	1410	.029	.158	.775	-.610
80	1411	-.231	.155	.205	-.968
80	1412	-.235	.137	.178	-.712
80	1413	-.229	.160	.323	-.879
80	1414	-.326	.198	.270	-1.402
80	1415	-.245	.187	.293	-1.107
80	1416	-.247	.158	.190	-.857
80	1417	-.210	.138	.163	-.747
80	1418	-.165	.126	.274	-.689
80	1419	-.169	.127	.208	-.639
80	1420	-.163	.127	.308	-.723
80	1421	-.180	.139	.313	-.681
80	1422	-.366	.207	.119	-1.056
80	1423	-.278	.174	.222	-1.078
80	1424	-.279	.169	.182	-.957
80	1425	-.192	.140	.264	-.663
80	1426	-.128	.134	.225	-.705
80	1427	-.274	.151	.165	-.737
80	1428	-.196	.142	.203	-.762
80	1429	-.171	.125	.210	-.774
80	1430	-.141	.134	.366	-.630
80	1431	-.125	.119	.269	-.514
80	1432	-.070	.119	.328	-.418
80	1433	-.156	.135	.380	-.595
80	1434	-.297	.191	.242	-1.191
80	1435	-.140	.136	.274	-.635
80	1901	-.295	.173	.278	-.921
80	1902	-.231	.170	.251	-.859
80	1903	.203	.094	.547	-.096
80	1904	-.344	.201	.158	-1.315
80	1905	-.009	.112	.365	-.464
80	1906	-.027	.119	.360	-.454
80	1907	-.418	.200	.158	-1.131
80	1908	-.425	.183	.086	-1.242
80	1909	-.415	.178	.076	-1.093
80	1910	-.437	.188	.074	-1.275
80	1911	.051	.133	.588	-.444
80	1912	.039	.139	.628	-.488
80	1913	-.456	.262	.156	-2.008
80	1914	-.324	.172	.160	-.926
80	1915	-.008	.115	.410	-.330
80	1916	-.518	.268	.203	-1.668
80	1917	-.372	.161	.203	-1.095
80	1918	-.385	.178	.049	-1.126
80	1919	-.424	.187	.148	-1.392
80	1920	-.254	.163	.144	-.926
80	1921	-.216	.132	.171	-.754
80	1922	-.286	.211	.333	-1.235
80	1923	-.366	.274	.332	-1.539
80	1924	-.417	.225	.327	-1.180
80	1925	-.385	.159	.154	-1.092
80	1926	-.203	.143	.233	-.786
80	1927	-.128	.117	.267	-.641
80	1928	-.138	.148	.446	-1.018
80	1929	-.200	.169	.296	-.878
80	1930	-.349	.170	.113	-1.121
80	1931	-.385	.183	.125	-1.175
80	1932	-.404	.158	-.000	-1.060
80	1933	-.164	.124	.257	-.665
80	1934	-.140	.129	.302	-.585
80	1935	-.165	.134	.228	-.589
80	1936	-.262	.145	.162	-.825
80	1937	-.298	.150	.130	-1.552
80	1938	-.272	.146	.177	-.832
80	1939	-.319	.154	.179	-.886
80	1940	-.216	.143	.189	-.634
80	1941	-.180	.134	.204	-.626
80	1942	-.197	.135	.247	-.737
80	1943	-.237	.129	.238	-.685
80	1944	-.270	.128	.105	-.734
80	1945	-.209	.128	.182	-.724
80	1946	-.188	.130	.228	-.666
80	1947	-.231	.143	.179	-.842
80	1948	-.253	.147	.143	-.851
80	1949	-.292	.129	.159	-.679
80	1950	-.278	.134	.129	-.821
80	1951	-.190	.128	.183	-.659
80	1952	-.213	.137	.209	-.816
80	1953	-.225	.130	.171	-.715
80	1954	-.253	.133	.199	-.786
80	1955	-.254	.148	.203	-.742
80	1956	-.224	.126	.220	-.688
80	1957	-.255	.139	.161	-.839
80	1958	-.240	.131	.228	-.715
80	1959	-.239	.138	.164	-.870
80	1960	-.241	.130	.151	-.738
80	1961	-.249	.136	.198	-1.004
80	1962	-.150	.125	.314	-.636
80	1963	-.159	.127	.253	-.589
80	1964	-.194	.133	.164	-.632
80	1965	-.244	.129	.174	-.685
80	1966	-.256	.142	.211	-.807
80	1967	-.236	.133	.238	-.733
80	1968	-.232	.137	.204	-.772
90	101	-.249	.137	.184	-.768
90	102	-.247	.155	.139	-1.258
90	103	-.260	.161	.175	-1.156
90	104	-.211	.135	.237	-.625
90	105	-.211	.131	.161	-.771
90	106	-.226	.147	.193	-.791
90	107	-.229	.138	.214	-.705
90	108	-.230	.137	.259	-.839
90	109	-.240	.137	.268	-1.053
90	110	-.244	.142	.364	-.805
90	111	-.262	.164	.300	-1.457
90	112	-.253	.160	.235	-1.081
90	113	-.258	.166	.264	-.978
90	114	-.210	.137	.202	-.705
90	115	-.218	.134	.141	-.712
90	116	-.199	.128	.187	-.598
90	117	-.222	.131	.241	-.803
90	118	-.215	.135	.175	-.741
90	119	-.207	.137	.273	-.730
90	120	-.225	.136	.203	-.825
90	121	-.234	.136	.171	-.941

UD	TAP	CPMEAN	CPRMS	CPMAX	CPMIN
90	122	-.241	.159	.186	-1.240
90	123	-.236	.152	.216	-1.158
90	124	-.207	.141	.268	-.730
90	125	-.210	.129	.278	-.720
90	126	-.211	.130	.228	-.633
90	127	-.202	.126	.316	-.688
90	128	-.218	.138	.276	-.688
90	129	-.232	.137	.266	-.775
90	130	-.221	.130	.138	-.789
90	131	-.242	.145	.282	-1.077
90	132	-.251	.138	.163	-1.116
90	133	-.235	.154	.255	-.987
90	134	-.238	.150	.231	-.777
90	135	-.232	.144	.282	-.811
90	136	-.213	.131	.224	-.672
90	137	-.227	.140	.192	-.706
90	138	-.240	.142	.242	-.723
90	139	-.247	.140	.278	-.777
90	140	-.233	.137	.206	-.872
90	141	-.247	.147	.291	-.922
90	142	-.255	.140	.237	-.821
90	143	-.260	.143	.255	-.936
90	144	-.276	.148	.237	-.827
90	145	-.245	.136	.201	-.733
90	146	-.256	.155	.228	-.782
90	147	-.242	.127	.145	-.782
90	148	-.241	.141	.190	-.857
90	149	-.260	.143	.257	-.962
90	150	-.260	.148	.224	-.933
90	151	-.292	.152	.226	-.933
90	152	-.307	.178	.181	-1.364
90	153	-.339	.180	.222	-1.279
90	154	-.341	.180	.170	-1.217
90	155	-.295	.170	.170	-1.075
90	156	-.293	.158	.156	-1.057
90	157	-.287	.163	.187	-1.015
90	158	-.271	.150	.142	-.877
90	159	-.260	.150	.271	-.958
90	160	-.245	.149	.305	-.863
90	161	-.272	.156	.478	-.999
90	162	-.218	.160	.591	-.856
90	163	-.263	.181	.433	-1.431
90	164	-.415	.231	.108	-1.662
90	165	-.347	.196	.257	-1.698
90	166	-.353	.174	.117	-1.199
90	167	-.309	.157	.266	-.953
90	168	-.255	.155	.255	-.902
90	169	-.245	.148	.201	-.741
90	170	-.226	.150	.300	-.777
90	171	-.238	.153	.170	-1.001
90	172	-.236	.147	.233	-.822
90	173	-.241	.151	.349	-.991
90	174	-.381	.168	.119	-1.070
90	175	-.325	.153	.128	-.869
90	176	-.233	.128	.168	-.707
90	177	-.182	.130	.181	-.720
90	178	-.193	.135	.215	-.786
90	179	-.220	.139	.197	-.876
90	180	-.357	.158	.146	-.896
90	181	-.230	.136	.249	-.698
90	182	-.182	.128	.355	-.648
90	183	-.184	.130	.208	-.607
90	184	-.485	.211	.033	-1.593
90	185	-.178	.144	.357	-.709
90	186	-.146	.129	.252	-.581
90	187	-.179	.133	.243	-.655
90	201	.516	.210	1.361	-.142
90	202	-.338	.176	.302	-1.348
90	203	-.263	.153	.278	-.940
90	204	.301	.195	.919	-.432
90	205	.345	.189	1.023	-.242
90	206	.309	.193	1.040	-.412
90	207	.299	.177	.842	-.287
90	208	.248	.178	.822	-.285
90	209	.282	.173	.922	-.222
90	210	.233	.183	.881	-.353
90	211	.184	.163	.775	-.330
90	212	.240	.204	.928	-.401
90	213	.421	.211	1.212	-.159
90	214	.482	.218	1.348	-.154
90	215	.558	.220	1.494	-.016
90	216	.539	.202	1.135	-.000
90	217	.528	.210	1.144	.004
90	218	.369	.182	1.384	-.263
90	219	.215	.154	.784	-.389
90	220	.159	.200	.795	-.505
90	221	.355	.187	1.067	-.192
90	222	.494	.190	1.245	-.066
90	223	.611	.209	1.221	.055
90	224	.560	.212	1.435	-.072
90	225	.520	.195	1.148	-.029
90	226	.334	.162	.901	-.190
90	227	.207	.158	.691	-.356
90	228	.125	.208	.937	-.536
90	229	.323	.186	.994	-.238
90	230	.468	.181	1.175	-.014
90	231	.552	.202	1.202	.027
90	232	.517	.197	1.289	-.127
90	233	.454	.188	1.191	-.134
90	234	.330	.179	.926	-.197
90	235	.173	.162	.718	-.331
90	236	.090	.194	.732	-.580
90	237	.275	.172	.935	-.308
90	238	.429	.186	1.171	-.165
90	239	.450	.188	1.118	-.077
90	240	.464	.181	1.218	-.134
90	241	.400	.187	1.101	-.068
90	242	.241	.157	.813	-.276
90	243	.088	.145	.707	-.378
90	244	.077	.199	.808	-.770
90	245	.210	.168	.847	-.346
90	246	.309	.158	.783	-.152
90	247	.381	.163	1.049	-.182
90	248	.345	.161	.926	-.134
90	249	.294	.152	.781	-.175
90	250	.142	.142	.572	-.303
90	251	-.000	.151	.515	-.571
90	252	-.023	.161	.542	-.519
90	253	.127	.145	.619	-.350
90	254	.276	.155	.855	-.222
90	255	.297	.151	.887	-.129
90	256	.283	.149	.832	-.195
90	257	.135	.139	.623	-.335
90	258	.009	.148	.546	-.545
90	259	-.079	.147	.481	-.692
90	260	-.067	.163	.725	-.616
90	261	.043	.135	.533	-.405
90	262	.260	.136	.808	-.233
90	263	.335	.138	1.058	-.048
90	264	.299	.146	.867	-.209
90	265	.115	.124	.562	-.405
90	266	.272	.143	1.032	-.292
90	267	.287	.143	.813	-.173
90	268	.404	.166	.998	-.069
90	269	.399	.153	.887	-.085
90	270	.361	.169	1.002	-.100
90	271	.305	.147	.883	-.197
90	272	-.022	.138	.458	-.597
90	301	-.241	.147	.219	-.832
90	302	-.281	.150	.197	-.989
90	303	-.317	.190	.128	-1.184
90	304	-.098	.141	.408	-.513
90	305	.010	.159	.654	-.590
90	306	-.117	.235	.588	-.895
90	307	-.254	.142	.231	-.811
90	308	-.247	.145	.229	-.995
90	309	-.249	.151	.158	-1.141
90	310	-.076	.141	.422	-.546
90	311	.023	.175	.642	-.949
90	312	-.129	.254	.687	-1.093

UD	TAP	CPMEAN	CPRMS	CPMAX	CPMIN
90	313	-.245	.140	.225	-1.142
90	314	-.252	.152	.188	-1.148
90	315	-.257	.151	.202	-1.071
90	316	-.112	.132	.273	-.533
90	317	-.082	.217	.550	-.926
90	318	-.252	.298	.591	-1.456
90	319	-.243	.142	.224	-.913
90	320	-.259	.138	.160	-.913
90	321	-.250	.156	.307	-.944
90	322	-.153	.137	.312	-.720
90	323	-.114	.225	.577	-1.227
90	324	-.342	.304	.472	-1.863
90	325	-.298	.170	.193	-.937
90	326	-.304	.167	.224	-1.038
90	327	-.288	.168	.176	-1.729
90	328	-.159	.151	.335	-.743
90	329	-.180	.243	.511	-1.279
90	330	-.425	.321	.593	-1.455
90	331	-.339	.175	.119	-1.158
90	332	-.361	.188	.133	-1.304
90	333	-.350	.187	.197	-1.350
90	334	-.250	.124	.017	-.725
90	335	-.204	.239	.396	-1.293
90	336	-.395	.313	.623	-1.831
90	337	-.390	.187	.162	-1.114
90	338	-.427	.227	.181	-1.549
90	339	-.437	.250	.087	-1.850
90	340	-.217	.162	.277	-1.031
90	341	-.264	.233	.335	-1.365
90	342	-.416	.295	.429	-1.557
90	343	-.348	.166	.195	-.960
90	344	-.419	.201	.132	-1.383
90	345	-.434	.232	.194	-2.258
90	346	-.225	.169	.478	-.857
90	347	-.235	.194	.324	-.989
90	348	-.321	.240	.736	-1.112
90	349	-.291	.171	.197	-1.079
90	350	-.319	.179	.249	-1.149
90	351	-.455	.208	.143	-1.275
90	352	-.198	.137	.264	-.691
90	353	-.188	.156	.340	-.818
90	354	-.392	.220	.199	-1.510
90	355	-.279	.173	.196	-.962
90	356	-.350	.197	.125	-1.286
90	357	-.250	.206	.347	-1.042
90	358	-.354	.204	.382	-1.206
90	401	-.270	.149	.233	-.948
90	402	-.271	.147	.233	-.870
90	403	-.208	.141	.244	-.750
90	404	-.269	.170	.208	-1.136
90	405	-.272	.164	.203	-1.273
90	406	-.272	.149	.160	-.814
90	407	-.267	.139	.173	-.823
90	408	-.247	.144	.274	-.731
90	409	-.232	.146	.247	-1.025
90	410	-.229	.148	.296	-.975
90	411	-.221	.137	.256	-.939
90	412	-.273	.174	.212	-1.309
90	413	-.258	.164	.189	-.932
90	414	-.243	.145	.180	-.723
90	415	-.254	.136	.199	-.791
90	416	-.220	.134	.201	-.680
90	417	-.221	.136	.260	-.688
90	418	-.217	.127	.230	-.704
90	419	-.223	.145	.205	-.818
90	420	-.297	.172	.233	-1.410
90	421	-.270	.164	.190	-.977
90	422	-.257	.134	.162	-.807
90	423	-.244	.140	.185	-.709
90	424	-.228	.128	.222	-.809
90	425	-.212	.130	.159	-.774
90	426	-.221	.135	.269	-.975
90	427	-.227	.141	.221	-1.055
90	428	-.298	.183	.192	-1.232
90	429	-.300	.183	.346	-1.153
90	430	-.300	.163	.173	-1.148
90	431	-.284	.148	.162	-.761
90	432	-.270	.149	.181	-.798
90	433	-.243	.144	.274	-1.023
90	434	-.257	.148	.239	-.911
90	435	-.257	.154	.149	-.839
90	436	-.319	.177	.137	-1.048
90	437	-.307	.159	.242	-.989
90	438	-.324	.164	.221	-1.102
90	439	-.337	.178	.219	-1.244
90	440	-.319	.167	.210	-1.025
90	441	-.310	.150	.117	-1.027
90	442	-.295	.153	.160	-.857
90	443	-.297	.141	.146	-.870
90	444	-.226	.152	.294	-.827
90	445	-.256	.157	.226	-.905
90	446	-.283	.153	.121	-1.247
90	447	-.346	.184	.117	-1.051
90	448	-.380	.184	.034	-1.444
90	449	-.342	.186	.233	-1.243
90	450	-.344	.168	.067	-1.005
90	451	-.358	.184	.190	-1.147
90	452	-.189	.149	.377	-.736
90	453	-.152	.146	.388	-.615
90	454	-.126	.157	.459	-.684
90	455	-.209	.168	.452	-1.049
90	456	-.354	.188	.153	-1.184
90	457	-.336	.162	.108	-1.054
90	458	-.367	.188	.132	-1.168
90	459	-.365	.195	.148	-1.145
90	460	-.167	.161	.568	-1.081
90	461	-.210	.156	.364	-.876
90	462	-.301	.181	.358	-1.488
90	463	-.317	.156	.143	-.901
90	464	-.320	.175	.279	-1.087
90	465	-.334	.191	.225	-1.192
90	466	-.115	.162	.539	-.664
90	467	-.148	.159	.380	-.796
90	468	-.263	.169	.382	-.895
90	469	-.298	.162	.161	-1.062
90	470	-.295	.161	.257	-.924
90	471	-.330	.156	.154	-.915
90	472	-.171	.146	.476	-.757
90	501	-.254	.150	.311	-.867
90	502	-.229	.145	.203	-1.280
90	503	-.236	.141	.188	-.827
90	504	-.266	.165	.226	-1.265
90	505	-.249	.133	.192	-.937
90	506	-.244	.138	.228	-.812
90	507	-.232	.143	.214	-.802
90	508	-.263	.157	.180	-1.103
90	509	-.260	.143	.240	-1.049
90	510	-.237	.129	.331	-.679
90	511	-.235	.138	.329	-.848
90	512	-.258	.160	.212	-.940
90	513	-.281	.145	.208	-1.127
90	514	-.266	.140	.196	-.745
90	515	-.255	.144	.197	-.864
90	516	-.268	.151	.247	-.869
90	517	-.329	.184	.263	-1.532
90	518	-.282	.133	.183	-.851
90	519	-.273	.146	.169	-.965
90	520	-.288	.140	.153	-.948
90	521	-.237	.181	.269	-1.136
90	522	-.212	.145	.263	-.775
90	523	-.213	.157	.324	-.919
90	524	-.236	.178	.300	-1.318
90	525	-.243	.165	.197	-.977
90	526	-.242	.151	.241	-.919
90	527	-.226	.153	.302	-1.076
90	528	-.258	.175	.214	-1.210
90	529	-.252	.147	.235	-.868
90	530	-.276	.159	.232	-1.020
90	531	-.184	.131	.255	-.740
90	532	-.231	.138	.190	-.872

WD	TAP	CPMEAN	CPRMS	CPMAX	CPMIN
90	533	-.193	.140	.210	-.729
90	534	-.199	.142	.228	-.776
90	601	-.254	.149	.217	-1.179
90	602	-.248	.132	.169	-.774
90	603	-.263	.148	.206	-.778
90	604	-.264	.149	.266	-1.304
90	605	-.238	.140	.214	-.841
90	606	-.249	.143	.212	-.762
90	607	-.266	.150	.288	-.933
90	608	-.267	.165	.248	-1.479
90	609	-.240	.129	.266	-.756
90	610	-.247	.139	.207	-.858
90	611	-.258	.143	.218	-.862
90	612	-.280	.156	.218	-1.114
90	613	-.278	.155	.124	-.954
90	614	-.266	.129	.121	-.862
90	615	-.286	.138	.162	-.912
90	616	-.310	.156	.232	-1.492
90	617	-.318	.156	.225	-1.047
90	618	-.310	.164	.137	-1.940
90	619	-.347	.171	.184	-1.114
90	620	-.348	.172	.095	-1.531
90	621	-.381	.171	.194	-1.002
90	622	-.402	.179	.034	-1.731
90	623	-.424	.214	.112	-1.681
90	624	-.431	.211	.108	-1.465
90	625	-.446	.230	.122	-1.534
90	626	-.437	.207	.214	-1.452
90	627	-.418	.214	.124	-1.609
90	628	-.393	.190	.176	-1.184
90	629	-.432	.180	.135	-1.089
90	630	-.420	.189	.092	-1.558
90	631	-.420	.170	.072	-1.173
90	632	-.458	.202	.065	-1.396
90	633	-.464	.201	.202	-1.476
90	634	-.293	.271	.581	-1.231
90	801	-.450	.244	.227	-1.436
90	802	-.282	.154	.234	-.903
90	803	-.214	.132	.205	-.707
90	804	-.462	.206	.063	-1.368
90	805	-.347	.160	.112	-1.141
90	806	-.406	.183	.130	-1.110
90	807	-.469	.189	.050	-1.303
90	808	-.442	.211	.214	-1.348
90	809	-.269	.164	.295	-.950
90	810	-.184	.131	.248	-.635
90	811	-.219	.155	.252	-.927
90	812	-.222	.132	.189	-.745
90	813	-.233	.143	.274	-.749
90	814	-.291	.160	.167	-.966

WD	TAP	CPMEAN	CPRMS	CPMAX	CPMIN
90	815	-.207	.157	.203	-.974
90	901	-.264	.175	.314	-1.163
90	902	-.262	.158	.289	-.974
90	903	-.279	.172	.342	-1.080
90	904	-.153	.158	.492	-.823
90	905	-.211	.138	.214	-.677
90	906	-.295	.175	.205	-1.149
90	907	-.261	.148	.187	-.978
90	908	-.246	.163	.243	-1.053
90	909	-.243	.140	.235	-.727
90	910	-.283	.154	.203	-.948
90	911	-.256	.160	.241	-.983
90	912	-.240	.155	.227	-1.254
90	913	-.286	.156	.139	-.999
90	914	-.268	.145	.173	-.846
90	915	-.240	.157	.271	-.844
90	916	-.236	.153	.284	-.846
90	917	-.267	.150	.171	-1.381
90	918	-.249	.138	.203	-.784
90	919	-.236	.154	.403	-1.006
90	920	-.225	.153	.439	-1.101
90	921	-.244	.175	.357	-.901
90	1101	-.221	.161	.326	-.903
90	1102	.139	.217	.970	-.669
90	1103	-.179	.166	.340	-.858
90	1104	-.226	.181	.368	-.777
90	1105	-.241	.168	.474	-.866
90	1106	-.235	.176	.430	-1.088
90	1107	-.275	.167	.274	-.874
90	1108	.068	.148	.608	-.673
90	1109	-.115	.134	.385	-.623
90	1110	-.378	.163	.206	-.990
90	1111	.082	.172	.611	-.653
90	1112	.002	.155	.635	-.522
90	1113	-.143	.187	.562	-.745
90	1114	.195	.172	.807	-.433
90	1115	-.159	.131	.171	-.788
90	1116	-.149	.137	.294	-.659
90	1117	-.039	.152	.443	-.681
90	1118	.120	.150	.624	-.566
90	1119	-.086	.217	.553	-1.270
90	1120	-.051	.126	.390	-.577
90	1121	.011	.162	.618	-.471
90	1122	.308	.172	1.046	-.192
90	1123	.038	.151	.646	-.497
90	1124	-.097	.150	.458	-.928
90	1125	.122	.136	.560	-.273
90	1126	-.162	.149	.283	-.667
90	1201	-.211	.146	.326	-.676
90	1202	-.206	.182	.403	-.977

WD	TAP	CPMEAN	CPRMS	CPMAX	CPMIN
90	1203	-.188	.180	.440	-1.115
90	1204	-.029	.196	.669	-.684
90	1205	-.185	.171	.377	-.907
90	1206	-.183	.164	.365	-.819
90	1207	-.180	.143	.270	-.701
90	1208	-.248	.144	.258	-.692
90	1209	-.254	.138	.169	-.672
90	1210	-.331	.164	.150	-1.037
90	1211	-.226	.133	.270	-.727
90	1212	-.151	.128	.234	-.572
90	1213	-.254	.161	.236	-.840
90	1214	-.132	.148	.430	-.775
90	1215	-.197	.140	.333	-.794
90	1216	-.253	.133	.111	-.661
90	1217	-.125	.145	.384	-.775
90	1218	-.055	.147	.427	-.877
90	1219	.025	.157	.490	-.608
90	1220	-.314	.157	.146	-.886
90	1221	-.176	.139	.186	-.630
90	1222	.007	.148	.524	-.748
90	1223	.339	.176	.976	-.158
90	1224	-.118	.135	.422	-.530
90	1225	-.152	.133	.335	-.644
90	1226	-.319	.149	.105	-.862
90	1227	.082	.142	.522	-.497
90	1228	.407	.180	1.100	-.112
90	1229	.136	.151	.712	-.301
90	1301	-.187	.145	.239	-.864
90	1302	-.163	.145	.308	-.777
90	1303	-.168	.153	.296	-.793
90	1304	-.229	.127	.201	-.675
90	1305	-.120	.136	.290	-.587
90	1306	-.151	.130	.278	-.618
90	1307	-.211	.119	.146	-.585
90	1308	-.220	.137	.175	-.749
90	1309	-.240	.127	.121	-.783
90	1311	-.142	.141	.351	-.547
90	1312	-.152	.121	.233	-.550
90	1313	-.173	.129	.193	-.633
90	1314	-.178	.137	.240	-.577
90	1315	-.243	.126	.196	-.662
90	1316	-.313	.144	.190	-.907
90	1317	-.086	.126	.355	-.492
90	1318	-.193	.127	.195	-.634
90	1319	-.165	.145	.316	-.613
90	1320	-.154	.146	.330	-.639
90	1321	-.178	.138	.280	-.581
90	1322	-.187	.134	.218	-.649
90	1323	-.329	.155	.115	-.944
90	1324	-.063	.142	.306	-.558

WD	TAP	CPMEAN	CPRMS	CPMAX	CPMIN
90	1325	-.111	.139	.341	-.543
90	1326	-.112	.124	.343	-.526
90	1327	-.142	.138	.303	-.604
90	1328	-.195	.125	.237	-.779
90	1329	-.340	.154	.054	-.869
90	1330	-.120	.134	.274	-.633
90	1331	-.119	.128	.254	-.608
90	1401	-.177	.149	.202	-.910
90	1402	-.244	.191	.264	-1.134
90	1403	-.174	.167	.371	-.773
90	1404	-.192	.170	.288	-.953
90	1405	-.192	.164	.406	-1.007
90	1406	-.170	.173	.308	-.890
90	1407	-.146	.161	.266	-.866
90	1408	-.157	.134	.237	-.589
90	1409	-.364	.198	.264	-1.182
90	1410	-.028	.194	.644	-.665
90	1411	-.214	.165	.243	-.783
90	1412	-.198	.151	.235	-.722
90	1413	-.182	.161	.311	-.907
90	1414	-.360	.200	.181	-1.117
90	1415	-.288	.179	.298	-1.235
90	1416	-.237	.184	.279	-.798
90	1417	-.242	.168	.274	-.776
90	1418	-.172	.139	.233	-.690
90	1419	-.154	.141	.218	-.802
90	1420	-.152	.139	.239	-.640
90	1421	-.141	.139	.254	-.605
90	1422	-.287	.219	.279	-1.077
90	1423	-.292	.212	.244	-1.012
90	1424	-.247	.168	.214	-.955
90	1425	-.163	.143	.255	-.713
90	1426	-.107	.134	.260	-.562
90	1427	-.250	.166	.179	-.882
90	1428	-.206	.152	.241	-.926
90	1429	-.178	.155	.222	-.769
90	1430	-.152	.138	.260	-.632
90	1431	-.111	.127	.279	-.550
90	1432	-.068	.124	.328	-.482
90	1433	-.112	.121	.297	-.568
90	1434	-.227	.212	.284	-1.022
90	1435	-.129	.145	.402	-.581
90	1901	-.287	.181	.176	-.971
90	1902	-.174	.185	.323	-.867
90	1903	.214	.110	.598	-.264
90	1904	-.304	.219	.165	-1.090
90	1905	.025	.118	.397	-.383
90	1906	-.061	.125	.429	-.575
90	1907	-.408	.194	.064	-1.238
90	1908	-.426	.179	.025	-1.127
90	1909	-.414	.191	.086	-1.452
90	1910	-.492	.194	.017	-1.346
90	1911	.029	.129	.537	-.404
90	1912	-.020	.174	.472	-.742
90	1913	-.479	.253	.278	-1.594
90	1914	-.271	.168	.222	-.813
90	1915	-.012	.126	.515	-.452
90	1916	-.518	.283	.115	-1.922
90	1917	-.398	.190	.103	-1.843
90	1918	-.376	.177	.041	-1.205
90	1919	-.437	.183	.103	-1.651
90	1920	-.262	.158	.167	-1.151
90	1921	-.201	.150	.285	-.915
90	1922	-.324	.220	.360	-1.329
90	1923	-.494	.262	.327	-1.753
90	1924	-.415	.196	.177	-1.445
90	1925	-.422	.179	.044	-1.149
90	1926	-.246	.141	.200	-.911
90	1927	-.159	.149	.287	-.772
90	1928	-.192	.172	.341	-.892
90	1929	-.261	.171	.361	-1.006
90	1930	-.349	.166	.119	-1.381
90	1931	-.360	.167	.103	-1.154
90	1932	-.393	.164	.036	-1.230
90	1933	-.152	.135	.295	-.609
90	1934	-.151	.140	.351	-.655
90	1935	-.203	.132	.224	-.726
90	1936	-.283	.147	.144	-.918
90	1937	-.298	.154	.219	-.976
90	1938	-.291	.141	.187	-.770
90	1939	-.339	.140	.112	-.921
90	1940	-.198	.133	.293	-.740
90	1941	-.170	.141	.297	-.680
90	1942	-.159	.136	.334	-.641
90	1943	-.249	.122	.142	-.825
90	1944	-.246	.116	.076	-.618
90	1945	-.181	.132	.251	-.689
90	1946	-.179	.133	.275	-.709
90	1947	-.253	.134	.205	-.789
90	1948	-.253	.127	.103	-.777
90	1949	-.304	.139	.112	-.818
90	1950	-.309	.140	.129	-.942
90	1951	-.173	.139	.217	-.696
90	1952	-.222	.145	.189	-.932
90	1953	-.240	.143	.165	-.893
90	1954	-.258	.135	.212	-.817
90	1955	-.254	.139	.104	-.768
90	1956	-.246	.129	.128	-.739
90	1957	-.277	.151	.160	-.840
90	1958	-.255	.133	.126	-.768
90	1959	-.257	.124	.190	-.663
90	1960	-.260	.131	.067	-.757
90	1961	-.264	.137	.229	-.779
90	1962	-.157	.126	.266	-.593
90	1963	-.161	.112	.307	-.512
90	1964	-.207	.126	.158	-.707
90	1965	-.269	.142	.207	-.850
90	1966	-.230	.139	.216	-.818
90	1967	-.244	.125	.151	-.847
90	1968	-.244	.132	.131	-.724
100	101	-.245	.145	.247	-.797
100	102	-.282	.160	.291	-.921
100	103	-.289	.146	.189	-.928
100	104	-.195	.133	.238	-.648
100	105	-.213	.137	.215	-.730
100	106	-.232	.129	.185	-.684
100	107	-.253	.134	.155	-.786
100	108	-.252	.136	.219	-.770
100	109	-.248	.139	.191	-.784
100	110	-.242	.135	.196	-.891
100	111	-.252	.141	.258	-.843
100	112	-.255	.143	.219	-.986
100	113	-.244	.155	.263	-1.193
100	114	-.186	.139	.254	-.622
100	115	-.186	.127	.222	-.585
100	116	-.198	.126	.182	-.696
100	117	-.186	.121	.178	-.742
100	118	-.224	.130	.129	-.632
100	119	-.210	.126	.153	-.726
100	120	-.197	.124	.205	-.703
100	121	-.212	.127	.152	-.696
100	122	-.223	.143	.210	-1.075
100	123	-.226	.128	.196	-.761
100	124	-.194	.126	.215	-.691
100	125	-.189	.121	.145	-.650
100	126	-.205	.127	.209	-.648
100	127	-.216	.127	.177	-.702
100	128	-.196	.129	.256	-.625
100	129	-.205	.119	.154	-.580
100	130	-.205	.121	.192	-.593
100	131	-.212	.129	.229	-.709
100	132	-.233	.137	.225	-.753
100	133	-.231	.131	.204	-.844
100	134	-.221	.124	.206	-.637
100	135	-.211	.125	.217	-.627
100	136	-.219	.119	.184	-.664
100	137	-.198	.130	.329	-.614
100	138	-.219	.124	.156	-.603
100	139	-.218	.127	.140	-.719
100	140	-.223	.136	.224	-.714

WD	TAP	CPMEAN	CPRMS	CPMAX	CPMIN	WD	TAP	CPMEAN	CPRMS	CPMAX	CPMIN	WD	TAP	CPMEAN	CPRMS	CPMAX	CPMIN
100	141	-.248	.133	.268	-.728	100	204	.399	.190	1.086	-.104	100	254	.291	.150	.854	-.241
100	142	-.256	.137	.217	-.841	100	205	.402	.202	1.125	-.256	100	255	.345	.147	.899	-.044
100	143	-.250	.137	.127	-.899	100	206	.302	.177	.945	-.370	100	256	.284	.150	.843	-.133
100	144	-.260	.142	.213	-.666	100	207	.300	.183	.958	-.405	100	257	.091	.134	.499	-.327
100	145	-.243	.133	.270	-.716	100	208	.248	.167	.739	-.246	100	258	-.041	.139	.489	-.424
100	146	-.220	.142	.293	-.743	100	209	.225	.159	.741	-.262	100	259	-.113	.146	.394	-.740
100	147	-.218	.130	.143	-.744	100	210	.201	.162	.926	-.272	100	260	-.024	.160	.649	-.595
100	148	-.228	.133	.215	-.764	100	211	.116	.166	.899	-.430	100	261	.059	.143	.494	-.412
100	149	-.236	.131	.163	-.719	100	212	.354	.215	1.164	-.231	100	262	.265	.130	.768	-.158
100	150	-.247	.136	.151	-.680	100	213	.503	.216	1.135	-.176	100	263	.339	.154	.998	-.138
100	151	-.266	.144	.138	-.780	100	214	.536	.201	1.226	-.047	100	264	.261	.150	.950	-.170
100	152	-.303	.146	.111	-1.035	100	215	.558	.218	1.206	-.052	100	265	.085	.124	.527	-.269
100	153	-.310	.153	.084	-1.012	100	216	.500	.215	1.160	-.116	100	266	.294	.151	1.000	-.107
100	154	-.330	.161	.218	-1.001	100	217	.426	.194	1.160	-.166	100	267	.316	.156	.953	-.287
100	155	-.294	.153	.291	-.892	100	218	.307	.178	.901	-.269	100	268	.357	.162	1.007	-.098
100	156	-.276	.154	.195	-1.309	100	219	.149	.145	.658	-.322	100	269	.399	.166	1.013	.011
100	157	-.259	.144	.236	-.769	100	220	.296	.216	1.174	-.446	100	270	.285	.131	.948	-.075
100	158	-.270	.140	.193	-.739	100	221	.411	.195	1.112	-.155	100	271	.291	.150	.941	-.149
100	159	-.246	.143	.265	-.723	100	222	.568	.208	1.400	-.026	100	272	-.041	.145	.373	-.651
100	160	-.238	.137	.261	-.709	100	223	.580	.191	1.275	.042	100	301	-.328	.159	.186	-.989
100	161	-.238	.146	.254	-.871	100	224	.527	.209	1.236	-.050	100	302	-.398	.192	.301	-1.210
100	162	-.255	.155	.277	-.866	100	225	.433	.178	1.117	-.111	100	303	-.527	.258	.101	-1.681
100	163	-.257	.171	.343	-1.005	100	226	.260	.174	.961	-.322	100	304	-.116	.152	.339	-.699
100	164	-.376	.189	.117	-1.716	100	227	.135	.147	.686	-.365	100	305	.073	.169	.715	-.521
100	165	-.350	.167	.176	-1.035	100	228	.239	.220	1.070	-.501	100	306	.051	.244	.852	-.746
100	166	-.329	.153	.115	-.944	100	229	.389	.205	1.141	-.260	100	307	-.352	.170	.240	-1.209
100	167	-.305	.160	.176	-.994	100	230	.517	.215	1.373	-.008	100	308	-.415	.221	.129	-1.522
100	168	-.276	.148	.181	-.785	100	231	.540	.176	1.231	.031	100	309	-.452	.253	.145	-1.487
100	169	-.277	.147	.177	-.866	100	232	.520	.185	1.153	.001	100	310	-.094	.155	.378	-.599
100	170	-.269	.143	.184	-.735	100	233	.408	.189	1.062	-.058	100	311	.120	.191	.759	-.621
100	171	-.276	.135	.240	-.923	100	234	.220	.154	.974	-.244	100	312	.074	.248	.887	-.832
100	172	-.295	.140	.138	-.806	100	235	.077	.133	.553	-.342	100	313	-.341	.175	.150	-1.313
100	173	-.306	.155	.179	-1.065	100	236	.164	.208	.931	-.514	100	314	-.431	.221	.109	-1.454
100	174	-.382	.158	.073	-1.037	100	237	.328	.185	1.045	-.287	100	315	-.413	.211	.287	-1.278
100	175	-.327	.147	.172	-.974	100	238	.506	.193	1.194	-.065	100	316	-.091	.155	.679	-.651
100	176	-.244	.136	.260	-.763	100	239	.485	.198	1.180	-.091	100	317	.069	.204	.702	-.778
100	177	-.230	.130	.256	-.646	100	240	.424	.171	1.055	-.070	100	318	-.038	.273	.643	-1.086
100	178	-.238	.132	.130	-.676	100	241	.354	.161	1.082	-.162	100	319	-.371	.189	.171	-1.238
100	179	-.280	.137	.138	-.959	100	242	.189	.154	.743	-.274	100	320	-.412	.233	.211	-1.608
100	180	-.389	.154	.130	-1.146	100	243	.029	.142	.610	-.480	100	321	-.450	.249	.171	-1.537
100	181	-.256	.133	.183	-.711	100	244	.167	.190	.800	-.725	100	322	-.159	.158	.460	-.835
100	182	-.213	.127	.235	-.619	100	245	.255	.174	.997	-.260	100	323	-.020	.207	.683	-1.081
100	183	-.223	.135	.204	-.795	100	246	.326	.163	.959	-.196	100	324	-.160	.305	.769	-1.178
100	184	-.443	.197	.154	-1.285	100	247	.362	.157	.986	-.073	100	325	-.377	.186	.202	-1.147
100	185	-.219	.142	.253	-.669	100	248	.346	.166	.959	-.273	100	326	-.485	.254	.143	-1.650
100	186	-.191	.125	.215	-.610	100	249	.257	.156	.892	-.188	100	327	-.475	.252	.154	-1.655
100	187	-.233	.131	.220	-.743	100	250	.106	.144	.640	-.408	100	328	-.157	.168	.444	-.790
100	201	.532	.215	1.247	-.134	100	251	-.039	.128	.399	-.520	100	329	-.058	.179	.517	-.782
100	202	-.341	.165	.257	-1.017	100	252	.035	.180	.620	-.736	100	330	-.263	.317	.843	-1.477
100	203	-.285	.160	.251	-.961	100	253	.146	.167	.773	-.358	100	331	-.430	.177	.036	-1.238

WD	TAP	CPMEAN	CPRMS	CPMAX	CPMIN
100	332	-.523	.258	.055	-1.863
100	333	-.590	.259	.064	-1.845
100	334	-.273	.115	.033	-.640
100	335	-.085	.208	.518	-.955
100	336	-.217	.284	.760	-1.453
100	337	-.473	.203	.062	-1.681
100	338	-.574	.270	.076	-1.767
100	339	-.594	.272	.078	-1.748
100	340	-.207	.165	.517	-1.064
100	341	-.135	.216	.725	-1.062
100	342	-.292	.304	.598	-1.366
100	343	-.442	.197	.097	-1.185
100	344	-.500	.221	.063	-1.425
100	345	-.545	.248	.219	-1.728
100	346	-.254	.175	.310	-.861
100	347	-.159	.193	.506	-.982
100	348	-.284	.260	.635	-1.316
100	349	-.311	.161	.172	-.893
100	350	-.343	.206	.184	-1.083
100	351	-.544	.230	.013	-1.643
100	352	-.209	.163	.325	-.855
100	353	-.161	.179	.446	-.978
100	354	-.318	.245	.769	-1.505
100	355	-.268	.186	.216	-1.037
100	356	-.335	.209	.200	-1.331
100	357	-.255	.225	.464	-1.028
100	358	-.354	.245	.656	-1.409
100	401	-.334	.171	.165	-1.005
100	402	-.329	.154	.178	-.991
100	403	-.326	.168	.181	-1.062
100	404	-.352	.197	.195	-1.417
100	405	-.323	.176	.188	-1.542
100	406	-.329	.164	.167	-1.024
100	407	-.347	.163	.261	-1.066
100	408	-.324	.162	.224	-.958
100	409	-.321	.169	.346	-1.215
100	410	-.319	.150	.155	-.814
100	411	-.334	.175	.270	-.967
100	412	-.352	.180	.115	-1.303
100	413	-.320	.182	.223	-1.731
100	414	-.312	.150	.209	-.902
100	415	-.326	.150	.103	-1.034
100	416	-.320	.170	.235	-1.129
100	417	-.306	.147	.160	-.937
100	418	-.299	.163	.292	-.873
100	419	-.315	.165	.178	-1.031
100	420	-.373	.198	.109	-1.196
100	421	-.362	.192	.145	-1.354
100	422	-.329	.152	.105	-.873
100	423	-.339	.156	.313	-1.031

WD	TAP	CPMEAN	CPRMS	CPMAX	CPMIN
100	424	-.326	.162	.127	-.986
100	425	-.310	.153	.149	-1.094
100	426	-.310	.155	.221	-.993
100	427	-.312	.162	.191	-1.067
100	428	-.397	.191	.164	-1.427
100	429	-.373	.178	.124	-1.038
100	430	-.373	.164	.304	-1.040
100	431	-.360	.155	.122	-.944
100	432	-.368	.166	.117	-1.254
100	433	-.359	.165	.124	-1.186
100	434	-.341	.155	.211	-1.099
100	435	-.364	.173	.120	-1.167
100	436	-.336	.195	.146	-1.226
100	437	-.346	.185	.141	-1.436
100	438	-.361	.179	.360	-1.208
100	439	-.400	.183	.138	-1.170
100	440	-.413	.197	.131	-1.382
100	441	-.392	.175	.174	-1.114
100	442	-.407	.177	.113	-1.208
100	443	-.411	.174	.099	-1.287
100	444	-.255	.174	.268	-1.138
100	445	-.222	.164	.329	-.781
100	446	-.277	.177	.247	-1.034
100	447	-.382	.187	.147	-1.282
100	448	-.438	.207	.138	-1.313
100	449	-.470	.211	.181	-1.559
100	450	-.472	.197	.074	-1.440
100	451	-.459	.206	.096	-1.412
100	452	-.192	.164	.434	-.821
100	453	-.174	.166	.505	-.739
100	454	-.166	.160	.469	-.783
100	455	-.228	.170	.582	-.972
100	456	-.372	.201	.211	-1.233
100	457	-.394	.192	.150	-1.117
100	458	-.453	.229	.103	-1.734
100	459	-.478	.241	.148	-1.733
100	460	-.196	.144	.319	-.851
100	461	-.210	.158	.321	-.791
100	462	-.326	.177	.225	-1.117
100	463	-.341	.160	.218	-.932
100	464	-.360	.160	.135	-.914
100	465	-.453	.195	.046	-1.249
100	466	-.140	.151	.477	-.816
100	467	-.137	.147	.312	-.644
100	468	-.264	.164	.223	-.884
100	469	-.331	.182	.124	-1.315
100	470	-.336	.166	.167	-1.112
100	471	-.348	.178	.160	-1.246
100	472	-.216	.148	.306	-.810
100	503	.255	.135	.138	-.832

WD	TAP	CPMEAN	CPRMS	CPMAX	CPMIN
100	502	-.254	.139	.122	-.818
100	503	-.252	.133	.178	-.737
100	504	-.258	.151	.233	-.875
100	505	-.248	.133	.188	-.765
100	506	-.246	.129	.131	-.812
100	507	-.253	.130	.167	-.670
100	508	-.275	.132	.160	-.658
100	509	-.268	.141	.209	-1.027
100	510	-.231	.123	.159	-.809
100	511	-.253	.138	.183	-.746
100	512	-.270	.140	.150	-1.051
100	513	-.264	.126	.167	-1.020
100	514	-.250	.142	.171	-1.093
100	515	-.236	.138	.176	-.793
100	516	-.270	.144	.216	-.852
100	517	-.276	.144	.169	-.970
100	518	-.272	.138	.207	-.850
100	519	-.257	.149	.264	-1.027
100	520	-.284	.145	.200	-.838
100	521	-.260	.174	.219	-1.565
100	522	-.262	.167	.457	-1.185
100	523	-.256	.177	.281	-1.135
100	524	-.247	.179	.294	-1.376
100	525	-.322	.176	.162	-1.097
100	526	-.321	.190	.164	-1.316
100	527	-.326	.195	.167	-1.307
100	528	-.331	.183	.216	-.994
100	529	-.314	.149	.196	-.909
100	530	-.333	.155	.089	-1.146
100	531	-.246	.146	.156	-.759
100	532	-.249	.138	.153	-.999
100	533	-.275	.143	.145	-.768
100	534	-.222	.128	.131	-.679
100	601	-.225	.141	.202	-.711
100	602	-.229	.130	.149	-.713
100	603	-.229	.140	.191	-.780
100	604	-.243	.141	.292	-.952
100	605	-.227	.132	.178	-.787
100	606	-.230	.120	.164	-.691
100	607	-.248	.137	.187	-.766
100	608	-.238	.130	.236	-.891
100	609	-.232	.123	.164	-.677
100	610	-.233	.116	.160	-.758
100	611	-.248	.124	.198	-.769
100	612	-.252	.139	.252	-.875
100	613	-.256	.136	.218	-.731
100	614	-.252	.131	.144	-.729
100	615	.269	.134	.230	-.859
100	616	-.279	.144	.236	-1.632
100	617	-.306	.147	.196	-1.135

WD	TAP	CPMEAN	CPRMS	CPMAX	CPMIN	WD	TAP	CPMEAN	CPRMS	CPMAX	CPMIN	WD	TAP	CPMEAN	CPRMS	CPMAX	CPMIN
100	618	-.290	.129	.099	-.808	100	919	-.274	.176	.309	-1.046	100	1222	-.066	.149	.426	-.663
100	619	-.319	.154	.158	-1.046	100	920	-.255	.157	.300	-1.282	100	1223	.314	.154	.830	-.165
100	620	-.320	.152	.115	-1.007	100	921	-.247	.169	.357	-1.160	100	1224	-.105	.133	.290	-.585
100	621	-.387	.165	.167	-1.239	100	1101	-.230	.147	.231	-.918	100	1225	-.166	.140	.272	-.603
100	622	-.374	.169	.082	-1.423	100	1102	.026	.265	.910	-.912	100	1226	-.310	.138	.135	-.858
100	623	-.402	.174	.230	-1.273	100	1103	-.168	.141	.276	-.655	100	1227	.017	.174	.865	-.608
100	624	-.380	.189	.135	-1.555	100	1104	-.294	.167	.471	-.842	100	1228	.401	.188	1.156	-.122
100	625	-.379	.185	.102	-1.391	100	1105	-.318	.167	.139	-.915	100	1229	.110	.126	.713	-.312
100	626	-.442	.206	.054	-1.706	100	1106	-.327	.180	.438	-1.007	100	1301	.202	.158	.218	-.863
100	627	-.409	.202	.118	-1.461	100	1107	-.313	.170	.323	-1.249	100	1302	-.148	.153	.418	-.689
100	628	-.387	.195	.076	-1.272	100	1108	-.038	.189	.597	-.785	100	1303	-.139	.160	.299	-.716
100	629	-.441	.172	.050	-1.138	100	1109	-.111	.145	.536	-.657	100	1304	-.255	.145	.188	-.745
100	630	-.436	.175	.147	-1.324	100	1110	-.386	.160	.166	-.926	100	1305	-.151	.141	.349	-.694
100	631	-.423	.177	.057	-1.088	100	1111	.054	.176	.767	-.452	100	1306	-.170	.136	.215	-.745
100	632	-.457	.184	.106	-1.172	100	1112	-.095	.164	.536	-.519	100	1307	-.238	.122	.240	-.686
100	633	-.478	.203	.028	-1.603	100	1113	-.204	.191	.755	-.852	100	1308	-.304	.152	.132	-.959
100	634	-.353	.191	.423	-1.120	100	1114	.125	.209	.754	-.632	100	1309	-.277	.136	.169	-.781
100	801	-.427	.232	.203	-1.219	100	1115	-.120	.143	.393	-.815	100	1311	-.144	.149	.478	-.645
100	802	-.284	.150	.187	-.855	100	1116	-.084	.146	.382	-.780	100	1312	-.144	.125	.273	-.667
100	803	-.245	.127	.203	-.691	100	1117	-.076	.146	.513	-.546	100	1313	-.175	.132	.244	-.686
100	804	-.461	.181	.073	-1.172	100	1118	.105	.156	.648	-.577	100	1314	-.190	.133	.200	-.637
100	805	-.353	.151	.081	-.925	100	1119	-.152	.215	.452	-.984	100	1315	-.252	.125	.105	-.642
100	806	-.404	.173	.109	-1.145	100	1120	-.108	.126	.351	-.623	100	1316	-.319	.141	.100	-.886
100	807	-.483	.182	.061	-1.302	100	1121	-.052	.181	.656	-.575	100	1317	-.083	.129	.349	-.548
100	808	-.443	.163	-.064	-1.115	100	1122	.315	.172	1.066	-.289	100	1318	-.215	.140	.208	-.757
100	809	-.295	.161	.203	-.922	100	1123	.009	.140	.515	-.520	100	1319	-.182	.118	.228	-.545
100	810	-.239	.143	.209	-.713	100	1124	-.159	.162	.619	-.813	100	1320	-.177	.149	.383	-.719
100	811	-.253	.146	.174	-1.142	100	1125	.119	.132	.686	-.370	100	1321	-.226	.135	.135	-.821
100	812	-.239	.133	.160	-.913	100	1126	-.161	.145	.284	-.799	100	1322	-.227	.117	.199	-.707
100	813	-.268	.148	.236	-.843	100	1201	-.242	.148	.221	-.766	100	1323	-.319	.159	.211	-.932
100	814	-.338	.163	.174	-1.077	100	1202	-.241	.155	.303	-.787	100	1324	-.017	.132	.465	-.411
100	815	-.284	.175	.207	-1.216	100	1203	-.219	.144	.298	-.736	100	1325	-.074	.156	.473	-.599
100	901	-.399	.200	.183	-1.296	100	1204	-.152	.183	.424	-.858	100	1326	-.113	.126	.429	-.520
100	902	-.394	.191	.192	-1.107	100	1205	-.234	.156	.268	-.956	100	1327	-.190	.149	.411	-.751
100	903	-.428	.196	.164	-1.128	100	1206	-.231	.146	.285	-.896	100	1328	-.221	.127	.189	-.655
100	904	-.199	.160	.288	-.862	100	1207	-.189	.149	.276	-.823	100	1329	-.342	.151	.169	-.983
100	905	-.281	.143	.180	-.763	100	1208	-.253	.138	.163	-.779	100	1330	-.087	.142	.390	-.634
100	906	-.367	.207	.275	-1.308	100	1209	-.248	.132	.228	-.749	100	1331	-.083	.143	.465	-.591
100	907	-.306	.158	.203	-.857	100	1210	-.324	.148	.124	-.943	100	1401	-.178	.154	.297	-.715
100	908	-.322	.163	.226	-1.002	100	1211	-.234	.131	.198	-.739	100	1402	-.194	.163	.260	-.920
100	909	-.259	.129	.242	-.689	100	1212	-.185	.131	.213	-.689	100	1403	-.160	.166	.416	-.711
100	910	-.336	.164	.164	-1.255	100	1213	-.269	.155	.284	-.794	100	1404	-.136	.143	.244	-.723
100	911	-.335	.172	.143	-1.145	100	1214	-.118	.151	.414	-.691	100	1405	-.155	.151	.321	-.625
100	912	-.280	.156	.229	-1.262	100	1215	-.205	.123	.158	-.682	100	1406	-.141	.148	.293	-.852
100	913	-.317	.168	.224	-1.041	100	1216	-.254	.129	.187	-.884	100	1407	-.124	.163	.340	-.867
100	914	-.308	.162	.159	-1.000	100	1217	-.151	.138	.282	-.671	100	1408	-.147	.145	.367	-.614
100	915	-.292	.166	.132	-.949	100	1218	-.084	.153	.394	-.786	100	1409	-.346	.169	.092	-.960
100	916	-.242	.138	.403	-.689	100	1219	.012	.162	.565	-.535	100	1410	-.150	.180	.474	-.629
100	917	-.273	.145	.281	-1.052	100	1220	-.300	.140	.108	-.824	100	1411	-.185	.159	.293	-1.061
100	918	-.251	.150	.210	-.999	100	1221	-.194	.121	.171	-.627	100	1412	-.167	.155	.221	-.780

WD	TAP	CPMEAN	CPRMS	CPMAX	CPMIN
100	1413	-.159	.149	.318	-.786
100	1414	-.365	.196	.153	-1.048
100	1415	-.304	.169	.232	-1.077
100	1416	-.192	.191	.409	-.955
100	1417	-.185	.162	.255	-.796
100	1418	-.178	.165	.241	-.922
100	1419	-.137	.145	.294	-.787
100	1420	-.142	.167	.366	-.860
100	1421	-.118	.161	.379	-1.507
100	1422	-.286	.219	.284	-1.230
100	1423	-.212	.161	.181	-.915
100	1424	-.200	.163	.216	-.894
100	1425	-.159	.146	.268	-.750
100	1426	-.090	.133	.318	-.521
100	1427	-.224	.177	.339	-.918
100	1428	-.196	.166	.174	-.949
100	1429	-.169	.141	.213	-.810
100	1430	-.157	.150	.281	-.928
100	1431	-.102	.131	.268	-.629
100	1432	-.057	.128	.325	-.569
100	1433	-.113	.134	.352	-.834
100	1434	-.151	.165	.326	-.873
100	1435	-.109	.143	.320	-.799
100	1901	-.242	.164	.203	-.884
100	1902	-.117	.186	.374	-.969
100	1903	.177	.125	.645	-.315
100	1904	-.210	.180	.202	-.941
100	1905	.005	.139	.605	-.414
100	1906	-.101	.147	.344	-.725
100	1907	-.417	.177	.073	-1.468
100	1908	-.429	.179	.092	-1.207
100	1909	-.417	.190	.145	-1.247
100	1910	-.473	.194	.070	-1.247
100	1911	-.030	.147	.538	-.478
100	1912	-.096	.186	.504	-.715
100	1913	-.470	.229	.084	-1.636
100	1914	-.218	.160	.204	-.807
100	1915	-.047	.131	.401	-.407
100	1916	-.475	.261	.120	-2.182
100	1917	-.389	.182	.061	-1.353
100	1918	-.393	.150	.101	-1.022
100	1919	-.477	.188	.020	-1.544
100	1920	-.300	.163	.113	-.979
100	1921	-.226	.156	.224	-.855
100	1922	-.389	.208	.265	-1.245
100	1923	-.502	.250	.228	-1.722
100	1924	-.413	.216	.173	-1.367
100	1925	-.410	.163	.103	-1.034
100	1926	-.261	.141	.131	-.782
100	1927	-.185	.157	.263	-1.000

WD	TAP	CPMEAN	CPRMS	CPMAX	CPMIN
100	1928	-.266	.156	.187	-1.144
100	1929	-.317	.165	.121	-.955
100	1930	-.380	.165	.112	-1.102
100	1931	-.388	.150	.060	-.996
100	1932	-.383	.151	.121	-.913
100	1933	-.167	.144	.291	-.744
100	1934	-.188	.148	.303	-.783
100	1935	-.252	.155	.365	-.877
100	1936	-.319	.144	.083	-.906
100	1937	-.329	.137	.091	-1.062
100	1938	-.313	.133	.110	-.783
100	1939	-.350	.144	.064	-.839
100	1940	-.202	.141	.237	-.754
100	1941	-.174	.141	.292	-.716
100	1942	-.216	.143	.200	-.783
100	1943	-.288	.128	.065	-.692
100	1944	-.279	.127	.045	-.657
100	1945	-.196	.138	.171	-.783
100	1946	-.243	.150	.211	-.714
100	1947	-.298	.135	.129	-.745
100	1948	-.284	.134	.102	-.797
100	1949	-.289	.124	.100	-.639
100	1950	-.305	.135	.123	-.863
100	1951	-.176	.156	.235	-.841
100	1952	-.249	.163	.199	-1.269
100	1953	-.300	.166	.145	-1.003
100	1954	-.310	.132	.076	-.854
100	1955	-.307	.135	.097	-.746
100	1956	-.270	.129	.145	-.675
100	1957	-.335	.156	.180	-.906
100	1958	-.284	.126	.157	-.782
100	1959	-.279	.130	.150	-.701
100	1960	-.287	.128	.131	-.689
100	1961	-.294	.125	.100	-.734
100	1962	-.214	.159	.183	-.956
100	1963	-.208	.121	.178	-.596
100	1964	-.240	.126	.135	-.901
100	1965	-.303	.139	.121	-.846
100	1966	-.283	.133	.131	-.770
100	1967	-.282	.131	.078	-.680
100	1968	-.280	.140	.097	-.718
110	101	-.290	.147	.205	-.890
110	102	-.314	.166	.210	-.880
110	103	-.316	.165	.105	-1.277
110	104	-.219	.135	.212	-.737
110	105	-.223	.128	.219	-.744
110	106	-.240	.134	.234	-.641
110	107	-.256	.142	.210	-.667
110	108	-.270	.137	.131	-.839
110	109	-.281	.137	.110	-.797

WD	TAP	CPMEAN	CPRMS	CPMAX	CPMIN
110	110	-.265	.138	.232	-.713
110	111	-.244	.139	.202	-.609
110	112	-.248	.128	.174	-.802
110	113	-.231	.133	.145	-.814
110	114	-.211	.119	.208	-.617
110	115	-.191	.121	.200	-.627
110	116	-.202	.124	.200	-.596
110	117	-.205	.114	.153	-.550
110	118	-.200	.114	.248	-.601
110	119	-.221	.120	.159	-.715
110	120	-.214	.112	.079	-.651
110	121	-.221	.121	.226	-.684
110	122	-.212	.122	.153	-.758
110	123	-.221	.119	.174	-.630
110	124	-.207	.116	.136	-.599
110	125	-.203	.120	.262	-.648
110	126	-.183	.118	.193	-.569
110	127	-.197	.116	.193	-.583
110	128	-.202	.118	.160	-.647
110	129	-.201	.115	.205	-.623
110	130	-.198	.119	.228	-.576
110	131	-.212	.120	.141	-.879
110	132	-.224	.119	.184	-.652
110	133	-.230	.123	.196	-.696
110	134	-.212	.123	.183	-.614
110	135	-.200	.121	.177	-.559
110	136	-.204	.128	.241	-.638
110	137	-.194	.115	.222	-.574
110	138	-.206	.118	.203	-.573
110	139	-.202	.127	.285	-.605
110	140	.200	.120	.179	-.564
110	141	.233	.118	.146	-.631
110	142	-.229	.134	.321	-.881
110	143	-.240	.123	.172	-.725
110	144	-.231	.128	.243	-.723
110	145	-.206	.128	.214	-.692
110	146	-.196	.122	.293	-.599
110	147	-.213	.127	.300	-.657
110	148	-.201	.124	.181	-.562
110	149	-.211	.125	.170	-.630
110	150	-.217	.129	.198	-.813
110	151	-.238	.126	.179	-.682
110	152	-.251	.132	.108	-.888
110	153	-.307	.152	.190	-1.036
110	154	-.295	.143	.169	-.864
110	155	-.275	.141	.189	-.810
110	156	-.266	.139	.259	-.870
110	157	-.240	.134	.202	-.753
110	158	-.255	.125	.217	-.670
110	159	-.233	.134	.224	-.702

WD	TAP	CPMEAN	CPRMS	CPMAX	CPMIN	WD	TAP	CPMEAN	CPRMS	CPMAX	CPMIN	WD	TAP	CPMEAN	CPRMS	CPMAX	CPMIN
110	160	-.265	.129	.169	-.716	110	223	.559	.208	1.244	-.063	110	301	-.415	.188	.131	-1.187
110	161	-.241	.141	.186	-.940	110	224	.497	.190	1.167	-.927	110	302	-.494	.255	.174	-1.555
110	162	-.263	.145	.189	-1.063	110	225	.370	.177	.963	-.111	110	303	-.863	.341	-.066	-2.331
110	163	-.269	.157	.184	-1.012	110	226	.187	.144	.722	-.273	110	304	-.096	.162	.504	-.807
110	164	-.302	.151	.193	-1.234	110	227	.066	.136	.617	-.371	110	305	.138	.194	.927	-.450
110	165	-.325	.137	.125	-1.144	110	228	.358	.220	1.143	-.371	110	306	.209	.236	1.012	-1.205
110	166	-.326	.139	.060	-.950	110	229	.490	.196	1.225	-.003	110	307	-.458	.205	.275	-1.327
110	167	-.312	.137	.125	-.796	110	230	.517	.202	1.239	.030	110	308	-.568	.274	.133	-1.586
110	168	-.277	.132	.103	-.718	110	231	.477	.186	1.101	-.067	110	309	-.895	.404	.133	-2.977
110	169	-.283	.129	.167	-.777	110	232	.460	.156	1.063	-.027	110	310	-.084	.199	.586	-.756
110	170	-.295	.138	.099	-.794	110	233	.329	.154	.962	-.117	110	311	.184	.212	1.031	-.602
110	171	-.310	.138	.082	-.810	110	234	.189	.144	.696	-.280	110	312	.248	.255	1.062	-.861
110	172	-.312	.151	.199	-.893	110	235	.035	.126	.497	-.392	110	313	-.501	.225	.045	-1.961
110	173	-.350	.147	.168	-.868	110	236	.302	.209	.982	-.411	110	314	-.751	.362	.147	-2.277
110	174	-.374	.164	.156	-1.077	110	237	.391	.192	1.199	-.120	110	315	-.778	.323	.031	-1.800
110	175	-.311	.144	.183	-.937	110	238	.446	.175	1.089	-.067	110	316	-.073	.194	.620	-.760
110	176	-.272	.138	.194	-.744	110	239	.460	.170	1.155	.013	110	317	.147	.221	.924	-.551
110	177	-.257	.130	.159	-.811	110	240	.389	.158	1.091	-.151	110	318	.180	.279	1.023	-.963
110	178	-.265	.136	.152	-.735	110	241	.277	.160	.831	-.216	110	319	-.472	.198	.131	-1.359
110	179	-.329	.137	.083	-.849	110	242	.125	.136	.557	-.335	110	320	-.650	.321	.172	-2.367
110	180	-.383	.148	.043	-.962	110	243	.002	.125	.555	-.435	110	321	-.766	.348	.062	-2.141
110	181	-.267	.139	.203	-.788	110	244	.216	.203	.989	-.413	110	322	-.219	.195	.423	-.843
110	182	-.243	.136	.245	-.688	110	245	.325	.186	1.017	-.163	110	323	.074	.201	.902	-1.032
110	183	-.284	.134	.118	-.809	110	246	.371	.181	1.037	-.131	110	324	.014	.293	.855	-1.046
110	184	-.415	.176	.041	-1.527	110	247	.340	.182	1.025	-.186	110	325	-.497	.193	.073	-1.324
110	185	-.251	.127	.196	-.702	110	248	.315	.159	1.065	-.175	110	326	-.685	.313	.029	-1.982
110	186	-.246	.127	.250	-.744	110	249	.215	.135	.646	-.215	110	327	-.736	.305	.016	-1.814
110	187	-.297	.151	.196	-.746	110	250	.057	.144	.645	-.437	110	328	-.181	.189	.462	-1.014
110	201	.427	.194	1.044	-.301	110	251	-.075	.120	.341	-.495	110	329	.048	.194	.772	-.753
110	202	-.397	.177	.108	-1.140	110	252	.100	.187	.766	-.493	110	330	-.005	.317	.932	-1.165
110	203	-.320	.164	.200	-.966	110	253	.201	.172	.839	-.395	110	331	-.508	.220	.073	-1.515
110	204	.442	.214	1.118	-.185	110	254	.316	.169	1.077	-.231	110	332	-.686	.330	.135	-2.166
110	205	.403	.203	1.055	-.246	110	255	.336	.153	.918	-.121	110	333	-.828	.321	.321	-2.056
110	206	.276	.165	.948	-.249	110	256	.246	.141	.839	-.213	110	334	-.267	.131	.150	-.615
110	207	.241	.150	.810	-.239	110	257	.065	.132	.519	-.410	110	335	.004	.192	1.355	-.804
110	208	.177	.155	.727	-.265	110	258	-.059	.132	.457	-.555	110	336	-.063	.322	.902	-1.317
110	209	.179	.149	.671	-.327	110	259	-.130	.128	.390	-.620	110	337	-.484	.203	.119	-1.370
110	210	.119	.143	.950	-.322	110	260	.028	.189	.712	-.702	110	338	-.688	.351	.149	-2.201
110	211	.044	.136	.533	-.415	110	261	.131	.169	.666	-.509	110	339	-.859	.323	.020	-2.079
110	212	.494	.202	1.175	-.127	110	262	.304	.158	.923	-.124	110	340	-.196	.182	.595	-.983
110	213	.549	.203	1.232	-.099	110	263	.365	.168	.983	-.048	110	341	-.049	.207	.701	-1.007
110	214	.562	.212	1.569	-.067	110	264	.235	.144	.801	-.202	110	342	-.134	.309	.756	-1.237
110	215	.530	.184	1.155	-.061	110	265	.057	.128	.534	-.386	110	343	-.472	.209	.093	-1.407
110	216	.438	.195	1.117	-.177	110	266	.273	.163	.957	-.191	110	344	-.459	.231	.187	-1.442
110	217	.363	.168	1.172	-.122	110	267	.378	.181	1.039	-.200	110	345	-.668	.324	.087	-2.425
110	218	.220	.154	.820	-.266	110	268	.393	.173	1.228	-.155	110	346	-.243	.183	.433	-.917
110	219	.089	.138	.562	-.378	110	269	.361	.157	.970	-.182	110	347	-.090	.217	.614	-.972
110	220	.409	.206	1.131	-.165	110	270	.274	.159	.932	-.188	110	348	-.146	.256	.655	-1.231
110	221	.526	.211	1.320	-.142	110	271	.277	.147	.756	-.135	110	349	-.326	.182	.272	-1.007
110	222	.576	.216	1.399	.023	110	272	-.083	.128	.588	-.628	110	350	-.292	.203	.285	-1.126

WD	TAP	CPMEAN	CPRMS	CPMAX	CPMIN
110	351	-.489	.257	.162	-2.158
110	352	-.195	.166	.464	-.754
110	353	-.096	.188	.618	-.999
110	354	-.184	.227	.543	-1.055
110	355	-.212	.177	.301	-1.033
110	356	-.282	.187	.321	-1.169
110	357	-.118	.194	.515	-1.090
110	358	-.332	.248	.819	-1.172
110	401	-.442	.204	.160	-1.686
110	402	-.430	.173	.105	-1.041
110	403	-.469	.199	.147	-1.340
110	404	-.327	.195	.225	-1.539
110	405	-.338	.183	.184	-1.157
110	406	-.359	.204	.177	-1.226
110	407	-.420	.204	.126	-1.729
110	408	-.503	.215	.192	-1.333
110	409	-.523	.236	.069	-1.665
110	410	-.553	.214	.083	-1.436
110	411	-.497	.202	.028	-1.295
110	412	-.346	.197	.219	-1.103
110	413	-.322	.183	.221	-1.188
110	414	-.347	.179	.260	-1.021
110	415	-.411	.189	.147	-1.212
110	416	-.476	.189	.021	-1.336
110	417	-.509	.234	.104	-1.733
110	418	-.507	.224	.083	-1.533
110	419	-.553	.227	.031	-1.703
110	420	-.379	.204	.179	-1.446
110	421	-.358	.189	.168	-1.151
110	422	-.360	.169	.144	-1.098
110	423	-.401	.176	.264	-1.027
110	424	-.445	.178	.117	-1.137
110	425	-.427	.165	.117	-1.026
110	426	-.450	.192	.163	-1.262
110	427	-.444	.176	.261	-1.436
110	428	-.372	.211	.149	-1.654
110	429	-.346	.190	.259	-1.114
110	430	-.381	.179	.147	-1.057
110	431	-.428	.202	.357	-1.127
110	432	-.462	.197	.106	-1.482
110	433	-.454	.181	.094	-1.324
110	434	-.438	.170	.190	-1.206
110	435	-.461	.186	.092	-1.283
110	436	-.359	.223	.270	-1.613
110	437	-.315	.177	.167	-1.217
110	438	-.354	.195	.288	-1.118
110	439	-.448	.204	.209	-1.359
110	440	-.471	.192	.168	-1.373
110	441	-.490	.204	.121	-1.560
110	442	-.488	.192	.092	-1.476

WD	TAP	CPMEAN	CPRMS	CPMAX	CPMIN
110	443	-.483	.201	.017	-1.233
110	444	-.261	.151	.265	-.874
110	445	-.259	.170	.361	-.883
110	446	-.264	.182	.370	-1.092
110	447	-.380	.210	.200	-1.315
110	448	-.475	.218	.255	-1.538
110	449	-.517	.216	.102	-1.319
110	450	-.524	.205	-.022	-1.393
110	451	-.562	.206	.079	-1.319
110	452	-.262	.163	.455	-.839
110	453	-.205	.156	.458	-.800
110	454	-.202	.140	.347	-.794
110	455	-.194	.149	.271	-.913
110	456	-.328	.189	.233	-1.230
110	457	-.380	.188	.124	-1.615
110	458	-.513	.230	.046	-1.487
110	459	-.613	.266	-.022	-1.721
110	460	-.211	.149	.265	-.944
110	461	-.196	.158	.338	-.885
110	462	-.303	.164	.153	-1.201
110	463	-.355	.169	.131	-1.042
110	464	-.351	.164	.182	-1.064
110	465	-.518	.225	.166	-1.445
110	466	-.127	.148	.365	-.604
110	467	-.133	.136	.305	-.754
110	468	-.226	.157	.276	-.708
110	469	-.316	.169	.259	-1.125
110	470	-.346	.171	.120	-.980
110	471	-.346	.169	.144	-.984
110	472	-.238	.148	.254	-.946
110	501	-.286	.146	.170	-.817
110	502	-.287	.139	.208	-.929
110	503	-.271	.158	.298	-.966
110	504	-.312	.157	.246	-.947
110	505	-.282	.137	.150	-.738
110	506	-.273	.133	.131	-.970
110	507	-.275	.146	.224	-.828
110	508	-.274	.152	.194	-.961
110	509	-.292	.148	.219	-1.315
110	510	-.277	.153	.125	-1.016
110	511	-.285	.146	.170	-.980
110	512	-.321	.150	.209	-.860
110	513	-.284	.142	.069	-.828
110	514	-.294	.148	.141	-1.016
110	515	-.304	.154	.161	-.777
110	516	-.293	.145	.161	-.840
110	517	-.297	.159	.200	-.911
110	518	-.302	.156	.124	-.947
110	519	-.289	.157	.255	-.865
110	520	-.300	.158	.143	-.940

WD	TAP	CPMEAN	CPRMS	CPMAX	CPMIN
110	521	-.281	.195	.186	-1.228
110	522	-.312	.184	.189	-1.115
110	523	-.337	.192	.245	-1.196
110	524	-.304	.186	.256	-1.053
110	525	-.416	.201	.089	-1.410
110	526	-.461	.244	.080	-1.713
110	527	-.438	.218	.103	-1.483
110	528	-.424	.219	.128	-1.905
110	529	-.391	.173	.126	-1.134
110	530	-.369	.167	.089	-.924
110	531	-.315	.137	.082	-.821
110	532	-.321	.167	.237	-.896
110	533	-.314	.147	.148	-.869
110	534	-.295	.152	.144	-.825
110	601	-.266	.143	.188	-.748
110	602	-.263	.139	.225	-.761
110	603	-.258	.143	.226	-.984
110	604	-.272	.144	.193	-.933
110	605	-.247	.134	.162	-.746
110	606	-.247	.142	.246	-.691
110	607	-.246	.131	.201	-.913
110	608	-.236	.134	.175	-.800
110	609	-.245	.120	.197	-.614
110	610	-.243	.136	.288	-.714
110	611	-.239	.126	.178	-.650
110	612	-.254	.130	.166	-.895
110	613	-.231	.126	.182	-.731
110	614	-.235	.120	.191	-.596
110	615	-.262	.126	.131	-.660
110	616	-.270	.123	.107	-.847
110	617	-.278	.137	.158	-.876
110	618	-.271	.131	.404	-.847
110	619	-.301	.133	.144	-.902
110	620	-.305	.133	.148	-.774
110	621	-.312	.127	.078	-.816
110	622	-.348	.151	.131	-.988
110	623	-.379	.173	.127	-1.461
110	624	-.374	.144	.073	-1.142
110	625	-.365	.156	.142	-.979
110	626	-.393	.162	.073	-1.328
110	627	-.407	.177	.126	-1.574
110	628	-.344	.155	.181	-1.240
110	629	-.464	.162	.035	-1.279
110	630	-.425	.183	.053	-1.252
110	631	-.442	.180	-.024	-1.261
110	632	-.436	.187	.148	-1.208
110	633	-.442	.196	.075	-1.412
110	634	-.438	.209	.463	-1.308
110	801	-.334	.264	.337	-1.392
110	802	-.284	.166	.268	-.918

WD	TAP	CPMEAN	CPRMS	CPMAX	CPMIN	WD	TAP	CPMEAN	CPRMS	CPMAX	CPMIN	WD	TAP	CPMEAN	CPRMS	CPMAX	CPMIN
110	803	-.287	.138	.149	-.716	110	1117	-.189	.160	.353	-.640	110	1313	-.203	.125	.212	-.581
110	804	-.498	.202	.035	-1.653	110	1118	.062	.154	.587	-.476	110	1314	-.264	.127	.135	-.741
110	805	-.390	.156	.148	-1.075	110	1119	-.254	.192	.347	-.952	110	1315	-.271	.121	.128	-.688
110	806	-.433	.184	.091	-1.139	110	1120	-.143	.127	.311	-.600	110	1316	-.306	.121	.066	-.715
110	807	-.480	.179	.022	-1.164	110	1121	-.125	.173	.522	-.650	110	1317	-.075	.123	.418	-.505
110	808	-.431	.174	.135	-1.339	110	1122	.277	.186	1.152	-.453	110	1318	-.218	.128	.179	-.660
110	809	-.321	.157	.195	-.844	110	1123	-.019	.132	.445	-.466	110	1319	-.194	.119	.140	-.805
110	810	-.301	.133	.117	-.807	110	1124	-.218	.179	.320	-1.014	110	1320	-.185	.141	.513	-.939
110	811	-.273	.154	.189	-.977	110	1125	.094	.135	.615	-.505	110	1321	-.251	.135	.162	-.746
110	812	-.317	.164	.182	-.885	110	1126	-.130	.135	.260	-.604	110	1322	-.203	.126	.108	-.826
110	813	-.347	.160	.106	-1.011	110	1201	-.268	.166	.218	-.966	110	1323	-.329	.143	.194	-.944
110	814	-.471	.211	.155	-1.368	110	1202	-.310	.176	.265	-.961	110	1324	-.000	.118	.395	-.378
110	815	-.343	.181	.251	-1.093	110	1203	-.282	.162	.283	-.971	110	1325	-.049	.134	.494	-.544
110	901	-.531	.227	.079	-1.847	110	1204	-.229	.152	.457	-.727	110	1326	-.130	.119	.331	-.529
110	902	-.506	.195	.100	-1.297	110	1205	-.288	.186	.314	-1.101	110	1327	-.226	.137	.251	-.664
110	903	-.548	.207	.389	-1.423	110	1206	-.294	.171	.232	-1.056	110	1328	-.234	.136	.202	-.892
110	904	-.249	.156	.224	-.940	110	1207	-.251	.144	.103	-.843	110	1329	-.350	.144	.123	-.862
110	905	-.394	.162	.054	-.948	110	1208	-.274	.133	.108	-.762	110	1330	-.053	.131	.372	-.558
110	906	-.449	.225	.145	-1.505	110	1209	-.251	.128	.136	-.781	110	1331	-.051	.131	.378	-.537
110	907	-.350	.160	.174	-.955	110	1210	-.323	.142	.087	-.889	110	1401	-.227	.163	.234	-.842
110	908	-.367	.167	.128	-1.026	110	1211	-.280	.132	.132	-.751	110	1402	-.226	.179	.294	-.806
110	909	-.292	.132	.141	-.680	110	1212	-.206	.125	.174	-.616	110	1403	-.198	.170	.324	-.989
110	910	-.377	.173	.179	-1.180	110	1213	-.287	.128	.110	-.751	110	1404	-.186	.167	.299	-.947
110	911	-.377	.179	.098	-1.315	110	1214	-.109	.161	.390	-.788	110	1405	-.206	.155	.175	-1.055
110	912	-.316	.172	.257	-1.041	110	1215	-.245	.131	.190	-.801	110	1406	-.153	.170	.342	-.788
110	913	-.387	.171	.143	-1.043	110	1216	-.262	.131	.142	-.736	110	1407	-.151	.168	.434	-.888
110	914	-.334	.166	.172	-.978	110	1217	-.199	.139	.225	-.705	110	1408	-.178	.151	.267	-.741
110	915	-.335	.168	.208	-.976	110	1218	-.110	.144	.427	-.761	110	1409	-.342	.156	.208	-1.044
110	916	-.272	.137	.138	-.766	110	1219	-.004	.161	.565	-.529	110	1410	-.247	.168	.351	-.748
110	917	-.270	.153	.463	-.912	110	1220	-.311	.139	.216	-.766	110	1411	-.209	.145	.292	-.778
110	918	-.265	.149	.167	-1.445	110	1221	-.218	.134	.208	-.650	110	1412	-.204	.149	.220	-.694
110	919	-.316	.167	.320	-.876	110	1222	-.130	.147	.314	-.608	110	1413	-.152	.152	.267	-.908
110	920	-.254	.167	.494	-.850	110	1223	.279	.188	.920	-.463	110	1414	-.353	.173	.953	-1.119
110	921	-.274	.169	.226	-.914	110	1224	-.127	.134	.329	-.588	110	1415	-.324	.155	.113	-.940
110	1101	-.269	.161	.205	-1.117	110	1225	-.199	.127	.161	-.682	110	1416	-.219	.164	.263	-.793
110	1102	-.159	.222	.590	-.784	110	1226	-.312	.142	.134	-.899	110	1417	-.191	.155	.222	-.818
110	1103	-.206	.143	.250	-.989	110	1227	-.063	.191	.455	-.630	110	1418	-.154	.158	.258	-.678
110	1104	-.312	.146	.158	-1.097	110	1228	.384	.215	1.216	-.403	110	1419	-.131	.134	.342	-.675
110	1105	-.346	.158	.171	-.999	110	1229	.075	.139	.655	-.382	110	1420	-.128	.172	.442	-.930
110	1106	-.351	.142	.130	-.849	110	1301	-.249	.156	.215	-.938	110	1421	-.147	.174	.314	-1.721
110	1107	-.331	.142	.268	-.850	110	1302	-.174	.172	.439	-.786	110	1422	-.276	.185	.226	-1.231
110	1108	-.121	.177	.412	-.772	110	1303	-.151	.174	.460	-.712	110	1423	-.240	.175	.227	-1.205
110	1109	-.115	.130	.238	-.588	110	1304	-.295	.130	.221	-.744	110	1424	-.221	.156	.291	-.917
110	1110	-.381	.157	.101	-.927	110	1305	-.149	.124	.351	-.559	110	1425	-.171	.151	.322	-.666
110	1111	-.022	.172	.559	-.548	110	1306	-.179	.125	.226	-.699	110	1426	-.102	.136	.465	-.621
110	1112	-.177	.148	.333	-.850	110	1307	-.275	.126	.142	-.758	110	1427	-.263	.185	.207	-.985
110	1113	-.268	.179	.507	-.773	110	1308	-.335	.132	.104	-.771	110	1428	-.226	.153	.379	-.966
110	1114	-.043	.242	.735	-.647	110	1309	-.287	.142	.186	-1.040	110	1429	-.204	.152	.279	-.845
110	1115	-.105	.132	.365	-.540	110	1311	-.188	.145	.457	-.791	110	1430	-.191	.144	.273	-.710
110	1116	-.070	.127	.347	-.465	110	1312	-.171	.122	.266	-.650	110	1431	-.132	.142	.291	-.659

WD	TAP	CPMEAN	CPRMS	CPMAX	CPMIN	WD	TAP	CPMEAN	CPRMS	CPMAX	CPMIN	WD	TAP	CPMEAN	CPRMS	CPMAX	CPMIN
110	1432	-.073	.135	.335	-.565	110	1947	-.298	.123	.189	-.909	120	129	-.206	.122	.138	-.641
110	1433	-.122	.150	.288	-.883	110	1948	-.289	.122	.127	-.864	120	130	-.200	.103	.125	-.555
110	1434	-.133	.144	.278	-.747	110	1949	-.282	.123	.165	-.760	120	131	-.203	.103	.101	-.562
110	1435	-.118	.144	.364	-.712	110	1950	-.314	.126	.153	-.783	120	132	-.214	.114	.227	-.671
110	1901	-.284	.189	.294	-1.111	110	1951	-.226	.144	.201	-.818	120	133	-.217	.113	.132	-.724
110	1902	-.074	.158	.363	-.765	110	1952	-.277	.173	.123	-1.188	120	134	-.206	.113	.175	-.691
110	1903	.156	.117	.586	-.234	110	1953	-.371	.164	.079	-1.301	120	135	-.204	.126	.261	-.701
110	1904	-.149	.150	.258	-.763	110	1954	-.287	.123	.047	-.716	120	136	-.195	.120	.195	-.597
110	1905	-.036	.123	.297	-.492	110	1955	-.315	.133	.074	-.812	120	137	-.181	.111	.184	-.585
110	1906	-.132	.138	.444	-.701	110	1956	-.277	.124	.135	-.740	120	138	-.197	.117	.197	-.578
110	1907	-.374	.157	.068	-1.024	110	1957	-.318	.132	.052	-1.012	120	139	-.191	.121	.152	-.600
110	1908	-.374	.148	-.002	-1.062	110	1958	-.305	.129	.065	-.782	120	140	-.192	.114	.241	-.550
110	1909	-.347	.147	.062	-.905	110	1959	-.292	.121	.082	-.777	120	141	-.202	.106	.219	-.560
110	1910	-.501	.202	.021	-1.488	110	1960	-.298	.122	.055	-.788	120	142	-.230	.109	.116	-.635
110	1911	-.072	.136	.388	-.551	110	1961	-.288	.128	.024	-.825	120	143	-.221	.117	.125	-.679
110	1912	-.196	.164	.398	-.786	110	1962	-.255	.154	.296	-.893	120	144	-.201	.118	.180	-.617
110	1913	-.401	.198	.035	-1.778	110	1963	-.227	.113	.122	-.711	120	145	-.197	.123	.195	-.728
110	1914	-.187	.149	.203	-1.249	110	1964	-.236	.123	.160	-.730	120	146	-.182	.121	.246	-.573
110	1915	-.103	.130	.447	-.645	110	1965	-.304	.139	.133	-1.021	120	147	-.185	.124	.168	-.604
110	1916	-.383	.200	.128	-1.488	110	1966	-.304	.139	.064	-.720	120	148	-.191	.118	.202	-.583
110	1917	-.350	.146	.108	-.996	110	1967	-.281	.132	.145	-.764	120	149	-.192	.121	.236	-.647
110	1918	-.357	.147	.062	-.880	110	1968	-.295	.133	.056	-.780	120	150	-.203	.113	.175	-.597
110	1919	-.420	.174	.062	-1.147	120	101	-.277	.139	.171	-.788	120	151	-.212	.118	.175	-.604
110	1920	-.297	.148	.123	-.880	120	102	-.285	.146	.133	-.853	120	152	-.219	.117	.192	-.693
110	1921	-.223	.159	.245	-.864	120	103	-.290	.146	.122	-.890	120	153	-.234	.127	.178	-.759
110	1922	-.387	.201	.254	-1.183	120	104	-.219	.122	.310	-.604	120	154	-.245	.130	.221	-.662
110	1923	-.435	.222	.131	-1.399	120	105	-.218	.124	.160	-.594	120	155	-.227	.127	.219	-.713
110	1924	-.347	.156	.095	-1.103	120	106	-.235	.127	.231	-.661	120	156	-.245	.121	.148	-.651
110	1925	-.380	.148	.101	-.962	120	107	-.247	.124	.225	-.671	120	157	-.248	.126	.229	-.726
110	1926	-.280	.127	.139	-.916	120	108	-.238	.124	.161	-.698	120	158	-.238	.137	.204	-.808
110	1927	-.244	.144	.152	-.967	120	109	-.241	.127	.160	-.688	120	159	-.251	.126	.142	-.701
110	1928	-.280	.149	.194	-1.064	120	110	-.239	.124	.203	-.711	120	160	-.258	.139	.215	-.864
110	1929	-.340	.165	.131	-1.152	120	111	-.243	.129	.213	-.790	120	161	-.246	.132	.194	-.728
110	1930	-.315	.138	.031	-.909	120	112	-.227	.136	.156	-.831	120	162	-.263	.140	.194	-.953
110	1931	-.357	.149	.071	-.859	120	113	-.239	.131	.205	-.805	120	163	-.264	.155	.234	-.827
110	1932	-.352	.153	.039	-1.064	120	114	-.216	.119	.266	-.588	120	164	-.303	.133	.140	-.835
110	1933	-.174	.140	.220	-.729	120	115	-.200	.113	.266	-.660	120	165	-.299	.137	.142	-.961
110	1934	-.253	.152	.204	-.794	120	116	-.207	.119	.165	-.626	120	166	-.297	.129	.068	-.723
110	1935	-.280	.149	.144	-1.152	120	117	-.207	.119	.185	-.569	120	167	-.276	.133	.197	-.776
110	1936	-.308	.132	.044	-.931	120	118	-.208	.113	.131	-.623	120	168	-.274	.123	.132	-.671
110	1937	-.320	.137	.061	-1.134	120	119	-.211	.117	.150	-.661	120	169	-.293	.134	.140	-.783
110	1938	-.312	.133	.117	-.784	120	120	-.203	.116	.200	-.598	120	170	-.289	.128	.120	-.711
110	1939	-.314	.120	.037	-.769	120	121	-.206	.124	.233	-.591	120	171	-.281	.132	.106	-.746
110	1940	-.195	.137	.201	-.892	120	122	-.209	.117	.175	-.643	120	172	-.322	.131	.165	-.799
110	1941	-.215	.148	.319	-.849	120	123	-.226	.121	.180	-.655	120	173	-.351	.153	.077	-.850
110	1942	-.283	.147	.104	-.911	120	124	-.215	.112	.111	-.579	120	174	-.346	.132	.037	-.794
110	1943	-.287	.130	.157	-.773	120	125	-.199	.109	.171	-.589	120	175	-.320	.129	.062	-.770
110	1944	-.294	.118	.036	-.699	120	126	-.204	.118	.266	-.634	120	176	-.253	.125	.175	-.707
110	1945	-.213	.143	.322	-.743	120	127	-.201	.111	.224	-.555	120	177	-.269	.115	.138	-.603
110	1946	-.264	.164	.202	-.961	120	128	-.201	.122	.224	-.562	120	178	-.270	.126	.086	-.832

WD	TAP	CPMEAN	CPRMS	CPMAX	CPMIN
120	179	-.326	.132	.133	-.836
120	180	-.361	.144	.235	-1.027
120	181	-.261	.122	.141	-.688
120	182	-.249	.119	.156	-.648
120	183	-.269	.126	.242	-.702
120	184	-.359	.134	.107	-.834
120	185	-.262	.124	.151	-.660
120	186	-.242	.115	.111	-.639
120	187	-.293	.138	.146	-.898
120	201	.347	.214	1.125	-.557
120	202	-.419	.168	.113	-1.120
120	203	-.328	.171	.193	-1.312
120	204	.433	.210	1.217	-.213
120	205	.391	.172	1.008	-.175
120	206	.246	.148	.771	-.205
120	207	.203	.155	.868	-.251
120	208	.154	.143	.590	-.315
120	209	.116	.137	.669	-.393
120	210	.043	.135	.494	-.383
120	211	-.004	.124	.455	-.413
120	212	.541	.212	1.205	-.079
120	213	.540	.192	1.277	-.048
120	214	.514	.201	1.141	-.052
120	215	.433	.183	1.093	-.091
120	216	.399	.174	1.163	-.144
120	217	.275	.155	.914	-.205
120	218	.133	.139	.662	-.266
120	219	.008	.121	.428	-.342
120	220	.492	.190	1.218	-.163
120	221	.529	.197	1.227	-.006
120	222	.527	.193	1.162	-.033
120	223	.465	.181	1.088	-.101
120	224	.402	.169	.976	-.056
120	225	.279	.146	.767	-.129
120	226	.112	.128	.577	-.251
120	227	.001	.116	.467	-.318
120	228	.426	.197	1.081	-.228
120	229	.465	.188	1.185	-.024
120	230	.486	.183	1.195	-.006
120	231	.460	.172	1.081	-.011
120	232	.366	.168	.921	-.119
120	233	.277	.160	.896	-.221
120	234	.106	.136	.651	-.362
120	235	-.009	.120	.372	-.402
120	236	.326	.187	.968	-.308
120	237	.393	.180	1.008	-.185
120	238	.440	.194	1.145	-.176
120	239	.409	.164	1.045	-.051
120	240	.317	.143	.833	-.119
120	241	.219	.128	.669	-.240

WD	TAP	CPMEAN	CPRMS	CPMAX	CPMIN
120	242	.091	.133	.539	-.306
120	243	-.040	.125	.387	-.448
120	244	.218	.182	1.033	-.423
120	245	.278	.171	1.000	-.248
120	246	.319	.169	.896	-.203
120	247	.305	.161	.826	-.216
120	248	.248	.150	.786	-.139
120	249	.149	.131	.608	-.247
120	250	.017	.123	.529	-.425
120	251	-.098	.126	.322	-.493
120	252	.098	.145	.582	-.376
120	253	.161	.140	.940	-.408
120	254	.253	.157	.965	-.235
120	255	.283	.149	.869	-.191
120	256	.215	.143	.739	-.203
120	257	.034	.142	.493	-.447
120	258	-.082	.141	.481	-.636
120	259	-.150	.125	.339	-.584
120	260	.055	.154	.628	-.411
120	261	.113	.136	.772	-.270
120	262	.221	.133	.804	-.128
120	263	.280	.134	.861	-.087
120	264	.187	.139	.685	-.326
120	265	.018	.125	.443	-.388
120	266	.252	.135	.739	-.180
120	267	.308	.160	1.214	-.210
120	268	.289	.155	.895	-.190
120	269	.332	.164	1.084	-.087
120	270	.271	.148	.861	-.131
120	271	.213	.135	.742	-.203
120	272	-.103	.114	.265	-.503
120	301	-.437	.169	.087	-1.049
120	302	-.369	.212	.230	-1.510
120	303	-.743	.341	.193	-2.128
120	304	.000	.191	.658	-.631
120	305	.218	.204	.844	-.339
120	306	.287	.208	1.139	-.550
120	307	-.500	.190	.004	-1.175
120	308	-.403	.245	.339	-1.422
120	309	-.793	.464	.507	-3.136
120	310	.065	.227	.870	-.663
120	311	.340	.210	1.011	-.271
120	312	.429	.243	1.334	-.368
120	313	-.524	.199	.053	-1.419
120	314	-.623	.398	.420	-1.892
120	315	-.753	.362	.358	-2.243
120	316	.038	.212	1.020	-.551
120	317	.301	.231	1.153	-.584
120	318	.355	.259	1.128	-.494
120	319	-.462	.196	.097	-1.662

WD	TAP	CPMEAN	CPRMS	CPMAX	CPMIN
120	320	-.619	.415	.528	-2.427
120	321	-.889	.389	.416	-2.206
120	322	-.145	.253	.718	-.845
120	323	.215	.226	1.083	-.563
120	324	.295	.298	1.332	-.666
120	325	-.472	.186	.299	-1.331
120	326	-.667	.394	.421	-1.843
120	327	-.850	.373	.213	-2.215
120	328	-.091	.248	.820	-.877
120	329	.173	.228	1.028	-.559
120	330	.153	.309	.976	-.863
120	331	-.482	.206	.092	-1.601
120	332	-.597	.369	.376	-2.164
120	333	-.737	.364	.495	-1.913
120	334	-.165	.168	.321	-.544
120	335	.093	.214	.849	-.824
120	336	.069	.298	1.109	-1.059
120	337	-.463	.243	.321	-1.678
120	338	-.574	.387	.439	-1.964
120	339	-.736	.383	.585	-2.090
120	340	-.192	.201	.500	-.948
120	341	-.099	.193	.651	-.853
120	342	-.043	.252	.892	-1.145
120	343	-.374	.222	.283	-1.401
120	344	-.367	.241	.344	-1.388
120	345	-.613	.368	.352	-1.944
120	346	-.182	.183	.602	-.916
120	347	-.062	.162	.586	-.638
120	348	-.113	.216	.570	-.905
120	349	-.214	.166	.242	-.888
120	350	-.230	.183	.336	-1.289
120	351	-.360	.263	.408	-1.473
120	352	-.129	.169	.477	-.756
120	353	-.054	.150	.496	-.547
120	354	-.164	.220	.480	-1.038
120	355	-.126	.169	.367	-.842
120	356	-.202	.176	.403	-.846
120	357	-.088	.194	.543	-1.286
120	358	-.257	.224	.732	-1.077
120	401	-.385	.204	.269	-1.279
120	402	-.520	.197	.037	-1.457
120	403	-.683	.262	-.016	-1.572
120	404	-.297	.170	.278	-1.029
120	405	-.297	.178	.244	-1.079
120	406	-.306	.186	.262	-1.070
120	407	-.353	.198	.186	-1.224
120	408	-.528	.235	.212	-1.413
120	409	-.709	.286	.181	-1.986
120	410	-.754	.256	-.017	-1.602
120	411	-.792	.281	-.079	-1.970

WD	TAP	CPMEAN	CPRMS	CPMAX	CPMIN	WD	TAP	CPMEAN	CPRMS	CPMAX	CPMIN	WD	TAP	CPMEAN	CPRMS	CPMAX	CPMIN
120	412	-.261	.155	.293	-.905	120	462	-.194	.155	.254	-.910	120	606	-.237	.126	.231	-.699
120	413	-.259	.156	.335	-.962	120	463	-.272	.168	.290	-.866	120	607	-.249	.112	.192	-.625
120	414	-.233	.162	.270	-1.069	120	464	-.286	.179	.242	-.955	120	608	-.240	.113	.186	-.618
120	415	-.272	.162	.177	-1.060	120	465	-.365	.222	.224	-1.217	120	609	-.237	.121	.137	-.660
120	416	-.457	.197	.119	-1.203	120	466	-.115	.123	.251	-.542	120	610	-.230	.117	.178	-.640
120	417	-.734	.255	-.001	-1.829	120	467	-.110	.120	.313	-.626	120	611	-.237	.107	.089	-.663
120	418	-.715	.239	.016	-1.619	120	468	-.165	.143	.263	-.722	120	612	-.228	.116	.159	-.626
120	419	-.765	.277	-.040	-2.119	120	469	-.238	.163	.219	-.837	120	613	-.223	.112	.179	-.573
120	420	-.260	.150	.227	-.884	120	470	-.250	.166	.334	-.979	120	614	-.217	.111	.189	-.885
120	421	-.275	.157	.340	-.840	120	471	-.275	.162	.173	-.869	120	615	-.229	.112	.173	-.590
120	422	-.307	.164	.207	-1.011	120	472	-.259	.138	.179	-.806	120	616	-.244	.120	.280	-.684
120	423	-.417	.203	.285	-1.066	120	501	-.287	.140	.209	-.886	120	617	-.232	.116	.119	-.606
120	424	-.531	.202	.216	-1.157	120	502	-.286	.139	.146	-.765	120	618	-.233	.117	.158	-.600
120	425	-.549	.194	.108	-1.330	120	503	-.256	.146	.158	-.920	120	619	-.261	.122	.136	-.692
120	426	-.574	.181	-.042	-1.266	120	504	-.289	.163	.219	-.896	120	620	-.262	.119	.142	-.650
120	427	-.602	.184	-.049	-1.294	120	505	-.281	.140	.105	-1.013	120	621	-.305	.130	.179	-.794
120	428	-.285	.181	.315	-1.463	120	506	-.283	.129	.117	-.773	120	622	-.319	.123	.053	-.858
120	429	-.281	.165	.264	-.950	120	507	-.260	.148	.186	-.903	120	623	-.336	.142	.107	-.883
120	430	-.318	.191	.310	-1.121	120	508	-.267	.140	.154	-.879	120	624	-.347	.139	.178	-.909
120	431	-.398	.207	.177	-1.153	120	509	-.279	.134	.171	-.787	120	625	-.337	.136	.081	-.914
120	432	-.501	.212	.181	-1.508	120	510	-.279	.134	.089	-.720	120	626	-.359	.144	.018	-.917
120	433	-.539	.195	.089	-1.512	120	511	-.275	.138	.175	-.985	120	627	-.345	.149	.283	-.952
120	434	-.521	.169	-.040	-1.233	120	512	-.270	.149	.180	-1.094	120	628	-.329	.145	.085	-.972
120	435	-.553	.190	.025	-1.404	120	513	-.279	.132	.170	-.814	120	629	-.421	.155	.035	-1.110
120	436	-.278	.169	.269	-1.088	120	514	-.300	.146	.200	-.849	120	630	-.386	.153	.043	-1.149
120	437	-.276	.166	.191	-.964	120	515	-.282	.133	.134	-.725	120	631	-.378	.142	-.010	-.974
120	438	-.265	.189	.262	-1.070	120	516	-.298	.129	.105	-.881	120	632	-.499	.140	-.025	-1.149
120	439	-.321	.231	.294	-1.342	120	517	-.318	.153	.110	-1.041	120	633	-.376	.146	.055	-1.018
120	440	-.497	.244	.278	-1.756	120	518	-.298	.151	.170	-.858	120	634	-.360	.156	.195	-1.533
120	441	-.572	.216	.011	-1.409	120	519	-.316	.144	.150	-.866	120	801	-.216	.217	.388	-1.238
120	442	-.613	.207	-.016	-1.427	120	520	-.303	.154	.105	-1.103	120	802	-.183	.164	.329	-.816
120	443	-.574	.206	.099	-1.482	120	521	-.371	.186	.149	-1.541	120	803	-.260	.119	.129	-.626
120	444	-.262	.143	.251	-.863	120	522	-.340	.169	.173	-1.191	120	804	-.455	.175	.077	-1.221
120	445	-.224	.138	.193	-.849	120	523	-.315	.151	.145	-.970	120	805	-.345	.137	.028	-.794
120	446	-.189	.151	.254	-.711	120	524	-.336	.144	.092	-.918	120	806	-.401	.155	.153	-1.963
120	447	-.232	.236	.379	-1.399	120	525	-.408	.183	.146	-1.183	120	807	-.460	.153	.069	-1.993
120	448	-.330	.250	.254	-1.531	120	526	-.426	.209	.135	-1.488	120	808	-.380	.145	.042	-1.980
120	449	-.489	.261	.263	-1.540	120	527	-.414	.190	.173	-1.687	120	809	-.287	.131	.153	-.799
120	450	-.578	.221	.138	-1.704	120	528	-.421	.202	.135	-1.807	120	810	-.288	.130	.119	-.848
120	451	-.604	.222	.036	-1.425	120	529	-.359	.144	.102	-.888	120	811	-.274	.135	.168	-.856
120	452	-.302	.145	.184	-.930	120	530	-.367	.149	.092	-.970	120	812	-.282	.140	.169	-.831
120	453	-.238	.133	.186	-.815	120	531	-.309	.135	.106	-.905	120	813	-.325	.152	.176	-1.125
120	454	-.206	.138	.274	-.761	120	532	-.286	.142	.170	-.925	120	814	-.518	.202	.111	-1.258
120	455	-.168	.147	.251	-.933	120	533	-.326	.141	.092	-.906	120	815	-.377	.171	.137	-1.117
120	456	-.259	.179	.260	-1.104	120	534	-.317	.142	.248	-.968	120	901	-.728	.276	-.911	-2.039
120	457	-.313	.206	.230	-1.228	120	601	-.246	.135	.188	-.704	120	902	-.612	.220	-.019	-1.387
120	458	-.441	.255	.212	-1.515	120	602	-.245	.123	.165	-.707	120	903	-.522	.243	.201	-1.457
120	459	-.522	.287	.066	-1.721	120	603	-.253	.122	.153	-.749	120	904	-.292	.170	.173	-1.133
120	460	-.203	.128	.242	-.674	120	604	-.254	.125	.151	-.824	120	905	-.541	.184	-.029	-1.242
120	461	-.158	.131	.273	-.719	120	605	-.229	.117	.136	-.694	120	906	-.454	.213	.059	-1.329

WD	TAP	CPMEAN	CPRMS	CPMAX	CPMIN	WD	TAP	CPMEAN	CPRMS	CPMAX	CPMIN	WD	TAP	CPMEAN	CPRMS	CPMAX	CPMIN
120	907	-.330	.149	.236	-.906	120	1219	-.310	.145	.143	-.820	120	1401	-.303	.155	.299	-.922
120	908	-.350	.149	.230	-.900	120	1211	-.275	.130	.063	-.719	120	1402	-.303	.172	.157	-1.027
120	909	-.284	.128	.151	-.750	120	1212	-.212	.126	.176	-.786	120	1403	-.235	.156	.258	-.884
120	910	-.369	.175	.208	-.993	120	1213	-.296	.128	.084	-.758	120	1404	-.189	.150	.245	-.769
120	911	-.326	.165	.148	-1.083	120	1214	-.124	.151	.490	-.832	120	1405	-.253	.162	.194	-1.132
120	912	-.237	.173	.298	-.953	120	1215	-.239	.115	.179	-.649	120	1406	-.175	.172	.330	-1.027
120	913	-.343	.163	.135	-1.017	120	1216	-.253	.118	.184	-.636	120	1407	-.166	.171	.440	-1.019
120	914	-.307	.154	.236	-.958	120	1217	-.227	.132	.199	-.620	120	1408	-.201	.146	.260	-.821
120	915	-.282	.165	.355	-.963	120	1218	-.135	.149	.347	-.610	120	1409	-.310	.127	.035	-.953
120	916	-.258	.131	.138	-.856	120	1219	-.054	.144	.395	-.577	120	1410	-.285	.144	.199	-.699
120	917	-.288	.145	.268	-1.173	120	1220	-.287	.118	.075	-.835	120	1411	-.187	.123	.232	-.627
120	918	-.276	.147	.168	-.936	120	1221	-.227	.124	.125	-.587	120	1412	-.193	.143	.326	-.775
120	919	-.248	.157	.256	-.940	120	1222	-.144	.133	.253	-.647	120	1413	-.152	.140	.281	-.865
120	920	-.219	.191	.381	-1.030	120	1223	.209	.152	.785	-.285	120	1414	-.315	.128	.081	-.879
120	921	-.204	.180	.350	-.890	120	1224	-.130	.128	.262	-.523	120	1415	-.303	.140	.051	-.920
120	1101	-.300	.141	.123	-.767	120	1225	-.208	.116	.181	-.669	120	1416	-.212	.143	.186	-.741
120	1102	-.290	.155	.429	-.880	120	1226	-.286	.129	.096	-.799	120	1417	-.202	.129	.216	-.561
120	1103	-.250	.145	.165	-.834	120	1227	-.076	.158	.426	-.633	120	1418	-.143	.135	.324	-.745
120	1104	-.333	.131	.095	-.882	120	1228	.343	.214	1.319	-.357	120	1419	-.180	.150	.303	-.885
120	1105	-.364	.147	.066	-.991	120	1229	.046	.117	.602	-.268	120	1420	-.112	.156	.423	-.836
120	1106	-.363	.130	.061	-.818	120	1301	-.297	.152	.166	-.828	120	1421	-.131	.173	.354	-1.063
120	1107	-.354	.144	.095	-.935	120	1302	-.164	.166	.429	-.802	120	1422	-.286	.161	.167	-.987
120	1108	-.213	.181	.518	-.753	120	1303	-.135	.171	.408	-.729	120	1423	-.242	.149	.177	-.825
120	1109	-.127	.120	.274	-.641	120	1304	-.317	.135	.101	-.788	120	1424	-.216	.142	.218	-.804
120	1110	-.356	.137	.044	-1.001	120	1305	-.159	.131	.343	-.537	120	1425	-.176	.145	.246	-.743
120	1111	-.065	.165	.481	-.605	120	1306	-.195	.113	.219	-.655	120	1426	-.105	.131	.421	-.563
120	1112	-.238	.136	.209	-.714	120	1307	-.269	.121	.151	-.793	120	1427	-.265	.182	.297	-.944
120	1113	-.311	.146	.180	-.794	120	1308	-.342	.128	.038	-.832	120	1428	-.217	.140	.254	-.849
120	1114	-.145	.212	.620	-.766	120	1309	-.315	.124	.124	-.762	120	1429	-.199	.136	.182	-.741
120	1115	-.125	.128	.289	-.586	120	1311	-.219	.143	.382	-.732	120	1430	-.181	.130	.195	-.632
120	1116	-.072	.117	.362	-.546	120	1312	-.182	.124	.192	-.649	120	1431	-.123	.133	.315	-.820
120	1117	-.242	.143	.199	-.746	120	1313	-.224	.115	.153	-.779	120	1432	-.100	.141	.320	-.620
120	1118	.012	.146	.542	-.510	120	1314	-.291	.127	.036	-.779	120	1433	-.147	.138	.263	-.711
120	1119	-.360	.192	.251	-1.081	120	1315	-.288	.127	.110	-.692	120	1434	-.116	.148	.362	-.782
120	1120	-.178	.114	.233	-.559	120	1316	-.326	.124	.035	-.726	120	1435	-.121	.143	.374	-.864
120	1121	-.165	.154	.512	-.673	120	1317	-.094	.109	.264	-.451	120	1901	-.278	.170	.106	-1.206
120	1122	.271	.176	1.063	-.263	120	1318	-.251	.114	.073	-.697	120	1902	-.051	.133	.377	-.679
120	1123	-.046	.134	.490	-.516	120	1319	-.202	.125	.252	-.631	120	1903	.098	.116	.541	-.321
120	1124	-.285	.170	.310	-.973	120	1320	-.205	.130	.218	-.715	120	1904	-.158	.149	.229	-.902
120	1125	.056	.129	.644	-.348	120	1321	-.269	.130	.203	-.793	120	1905	-.075	.118	.323	-.523
120	1126	-.128	.139	.242	-.648	120	1322	-.263	.129	.109	-.640	120	1906	-.292	.128	.214	-.735
120	1201	-.326	.149	.074	-.852	120	1323	-.334	.141	.104	-.919	120	1907	-.336	.129	.086	-.859
120	1202	-.353	.174	.201	-1.072	120	1324	-.002	.123	.460	-.409	120	1908	-.359	.139	.006	-.836
120	1203	-.309	.159	.198	-.855	120	1325	-.065	.124	.525	-.406	120	1909	-.355	.136	.026	-.891
120	1204	-.284	.131	.126	-.805	120	1326	-.134	.118	.266	-.488	120	1910	-.457	.186	.008	-1.157
120	1205	-.336	.185	.149	-1.061	120	1327	-.229	.125	.164	-.619	120	1911	-.123	.124	.280	-.547
120	1206	-.324	.172	.200	-1.195	120	1328	-.267	.119	.170	-.684	120	1912	-.240	.155	.308	-.792
120	1207	-.302	.144	.116	-.912	120	1329	-.315	.130	.072	-.742	120	1913	-.357	.164	.050	-1.181
120	1208	-.270	.118	.148	-.682	120	1330	-.058	.115	.394	-.441	120	1914	-.179	.133	.152	-.743
120	1209	-.259	.106	.113	-.668	120	1331	-.054	.115	.403	-.419	120	1915	-.114	.114	.310	-.559

WD	TAP	CPMEAN	CPRMS	CPMAX	CPMIN	WD	TAP	CPMEAN	CPRMS	CPMAX	CPMIN	WD	TAP	CPMEAN	CPRMS	CPMAX	CPMIN
120	1916	-.349	.140	.121	-1.051	120	1966	-.301	.118	.049	-.683	130	148	-.184	.112	.248	-.596
120	1917	-.347	.132	.027	-.854	120	1967	-.303	.116	.047	-.694	130	149	-.194	.119	.155	-.734
120	1918	-.339	.125	.045	-.772	120	1968	-.303	.118	.019	-.795	130	150	-.204	.116	.170	-.620
120	1919	-.414	.147	.044	-1.002	130	101	-.252	.135	.251	-.786	130	151	-.222	.131	.139	-.708
120	1920	-.300	.131	.090	-.841	130	102	-.260	.137	.272	-.801	130	152	-.223	.134	.200	-.715
120	1921	-.228	.136	.229	-.735	130	103	-.285	.171	.193	-1.014	130	153	-.266	.127	.110	-.673
120	1922	-.391	.177	.057	-1.301	130	104	-.199	.125	.205	-.740	130	154	-.233	.135	.150	-.756
120	1923	-.347	.155	.093	-1.068	130	105	-.201	.136	.286	-.666	130	155	-.198	.135	.277	-.687
120	1924	-.309	.118	.095	-.779	130	106	-.198	.132	.220	-.657	130	156	-.193	.126	.210	-.661
120	1925	-.389	.139	.044	-.901	130	107	-.214	.120	.171	-.662	130	157	-.200	.127	.403	-.758
120	1926	-.264	.117	.162	-.636	130	108	-.217	.133	.208	-.657	130	158	-.234	.129	.296	-.732
120	1927	-.287	.133	.130	-.836	130	109	-.196	.133	.229	-.789	130	159	-.228	.128	.181	-.794
120	1928	-.335	.157	.067	-.992	130	110	-.183	.124	.232	-.597	130	160	-.223	.136	.191	-.805
120	1929	-.302	.130	.167	-.932	130	111	-.187	.130	.186	-.865	130	161	-.231	.138	.205	-.698
120	1930	-.311	.128	.097	-.737	130	112	-.213	.143	.236	-.947	130	162	-.259	.142	.184	-.753
120	1931	-.325	.128	.076	-.803	130	113	-.209	.138	.275	-1.146	130	163	-.261	.155	.277	-.850
120	1932	-.323	.119	-.007	-.795	130	114	-.186	.116	.154	-.599	130	164	-.282	.138	.207	-.822
120	1933	-.223	.146	.234	-.823	130	115	-.180	.119	.260	-.597	130	165	-.275	.139	.119	-.782
120	1934	-.273	.142	.190	-.821	130	116	-.196	.118	.181	-.626	130	166	-.280	.125	.179	-.843
120	1935	-.292	.144	.218	-.874	130	117	-.190	.123	.160	-.544	130	167	-.272	.135	.188	-.751
120	1936	-.310	.134	.082	-.813	130	118	-.184	.119	.232	-.602	130	168	-.245	.119	.122	-.644
120	1937	-.310	.123	.029	-.831	130	119	-.179	.119	.155	-.616	130	169	-.253	.131	.231	-.841
120	1938	-.298	.116	.021	-.755	130	120	-.183	.114	.200	-.584	130	170	-.252	.122	.143	-.670
120	1939	-.318	.121	.037	-.720	130	121	-.190	.119	.241	-.596	130	171	-.276	.127	.088	-.724
120	1940	-.230	.129	.234	-.891	130	122	-.184	.109	.157	-.536	130	172	-.292	.133	.090	-.824
120	1941	-.257	.134	.112	-.696	130	123	-.188	.121	.263	-.656	130	173	-.312	.134	.106	-.775
120	1942	-.295	.124	.059	-.717	130	124	-.191	.110	.109	-.561	130	174	-.346	.136	.078	-.826
120	1943	-.301	.114	.028	-.702	130	125	-.191	.108	.119	-.556	130	175	-.296	.133	.123	-.815
120	1944	-.304	.102	-.029	-.692	130	126	-.184	.106	.127	-.548	130	176	-.236	.116	.121	-.661
120	1945	-.228	.120	.167	-.724	130	127	-.198	.118	.250	-.544	130	177	-.255	.124	.123	-.700
120	1946	-.314	.143	.142	-.846	130	128	-.194	.117	.141	-.667	130	178	-.264	.125	.135	-.661
120	1947	-.299	.124	.099	-.681	130	129	-.188	.113	.139	-.584	130	179	-.353	.144	.216	-.910
120	1948	-.291	.111	.112	-.717	130	130	-.188	.116	.295	-.620	130	180	-.335	.154	.172	-.882
120	1949	-.300	.116	.062	-.661	130	131	-.199	.111	.162	-.603	130	181	-.254	.128	.158	-.694
120	1950	-.277	.113	.118	-.628	130	132	-.198	.114	.189	-.577	130	182	-.247	.124	.135	-.768
120	1951	-.294	.141	.145	-.915	130	133	-.191	.117	.202	-.573	130	183	-.265	.134	.188	-.866
120	1952	-.366	.193	.130	-1.141	130	134	-.194	.114	.195	-.617	130	184	-.371	.146	.036	-1.022
120	1953	-.363	.145	.191	-.894	130	135	-.197	.124	.169	-.629	130	185	-.260	.125	.120	-.658
120	1954	-.300	.122	.128	-.673	130	136	-.191	.116	.196	-.573	130	186	-.218	.119	.204	-.689
120	1955	-.297	.116	.108	-.724	130	137	-.188	.120	.260	-.529	130	187	-.260	.130	.223	-.694
120	1956	-.263	.110	.033	-.641	130	138	-.184	.124	.267	-.656	130	201	.150	.259	.832	-1.206
120	1957	-.341	.137	.018	-.909	130	139	-.193	.112	.170	-.535	130	202	-.417	.170	.185	-1.353
120	1958	-.298	.117	.074	-.698	130	140	-.202	.121	.184	-.622	130	203	-.305	.155	.219	-.858
120	1959	-.277	.119	.102	-.824	130	141	-.203	.116	.146	-.613	130	204	.391	.216	1.078	-.565
120	1960	-.310	.129	.049	-.796	130	142	-.224	.119	.127	-.677	130	205	.336	.183	1.001	-.287
120	1961	-.279	.117	.074	-.902	130	143	-.213	.116	.217	-.701	130	206	.217	.164	.785	-.383
120	1962	-.270	.141	.171	-.871	130	144	-.188	.125	.229	-.646	130	207	.170	.156	.792	-.392
120	1963	-.227	.109	.067	-.638	130	145	-.183	.121	.207	-.582	130	208	.107	.145	.651	-.397
120	1964	-.252	.113	.161	-.717	130	146	-.182	.122	.196	-.698	130	209	.083	.133	.615	-.423
120	1965	-.320	.126	.052	-.787	130	147	-.183	.114	.222	-.560	130	210	.007	.135	.467	-.562

WD	TAP	CPMEAN	CPRMS	CPMAX	CPMIN	WD	TAP	CPMEAN	CPRMS	CPMAX	CPMIN	WD	TAP	CPMEAN	CPRMS	CPMAX	CPMIN
130	211	-.052	.125	.446	-.546	130	261	.073	.118	.589	-.409	130	339	-.323	.389	.487	-1.835
130	212	.532	.255	1.338	-.467	130	262	.151	.141	.645	-.337	130	340	-.017	.185	.732	-.712
130	213	.504	.220	1.281	-.245	130	263	.174	.146	.869	-.231	130	341	.044	.168	.793	-.633
130	214	.470	.206	1.149	-.155	130	264	.094	.143	.729	-.390	130	342	.034	.201	.854	-.954
130	215	.393	.176	1.004	-.338	130	265	-.040	.128	.365	-.469	130	343	-.124	.178	.422	-.872
130	216	.310	.157	.906	-.175	130	266	.154	.140	.657	-.257	130	344	-.134	.213	.464	-1.182
130	217	.203	.149	.693	-.269	130	267	.178	.140	.792	-.225	130	345	-.173	.265	.792	-1.300
130	218	.075	.128	.469	-.386	130	268	.208	.161	.771	-.372	130	346	-.013	.165	.649	-.697
130	219	-.026	.117	.436	-.436	130	269	.231	.177	1.068	-.290	130	347	.024	.146	.489	-.572
130	220	.504	.221	1.295	-.147	130	270	.168	.156	.928	-.306	130	348	.007	.187	.614	-.823
130	221	.497	.215	1.245	-.140	130	271	.136	.158	.725	-.292	130	349	-.055	.158	.421	-.733
130	222	.471	.195	1.050	-.120	130	272	-.135	.115	.333	-.559	130	350	-.033	.154	.449	-.749
130	223	.408	.171	.935	-.106	130	301	-.319	.186	.385	-.947	130	351	-.080	.186	.422	-1.227
130	224	.336	.158	.890	-.195	130	302	-.219	.174	.514	-1.045	130	352	-.003	.138	.441	-.592
130	225	.203	.162	.686	-.323	130	303	-.391	.309	.625	-1.518	130	353	.015	.135	.520	-.532
130	226	.052	.123	.438	-.354	130	304	.156	.219	.892	-.545	130	354	.005	.160	.439	-.886
130	227	-.044	.104	.271	-.414	130	305	.273	.204	.944	-.636	130	355	-.021	.145	.395	-.631
130	228	.411	.205	1.066	-.206	130	306	.322	.212	1.053	-.478	130	356	-.046	.170	.522	-.866
130	229	.394	.220	1.118	-.249	130	307	-.331	.186	.175	-1.025	130	357	.037	.155	.640	-.643
130	230	.394	.191	.997	-.127	130	308	-.158	.216	.508	-.984	130	358	-.020	.216	.700	-.872
130	231	.332	.168	.885	-.230	130	309	-.325	.345	.645	-1.806	130	401	-.263	.149	.202	-.907
130	232	.294	.153	.779	-.213	130	310	.273	.231	1.031	-.436	130	402	-.452	.227	.192	-1.212
130	233	.174	.141	.730	-.250	130	311	.460	.239	1.342	-.253	130	403	-.631	.256	.018	-1.896
130	234	.046	.119	.498	-.368	130	312	.498	.250	1.244	-.457	130	404	-.229	.148	.244	-1.180
130	235	-.051	.122	.357	-.440	130	313	-.353	.198	.223	-1.042	130	405	-.210	.149	.309	-.792
130	236	.270	.212	1.131	-.445	130	314	-.250	.307	.731	-1.437	130	406	-.193	.171	.256	-.952
130	237	.265	.186	.973	-.309	130	315	-.375	.350	.944	-1.713	130	407	-.213	.190	.292	-1.021
130	238	.291	.191	1.107	-.292	130	316	.249	.215	1.059	-.501	130	408	-.348	.258	.313	-1.290
130	239	.243	.177	.887	-.250	130	317	.425	.229	1.131	-.328	130	409	-.512	.265	.178	-1.749
130	240	.216	.165	.918	-.213	130	318	.516	.239	1.515	-.361	130	410	-.744	.276	.154	-1.799
130	241	.133	.140	.660	-.285	130	319	-.353	.170	.243	-1.112	130	411	-.764	.283	-.081	-1.823
130	242	.021	.123	.446	-.386	130	320	-.252	.274	.669	-1.595	130	412	-.185	.120	.199	-.632
130	243	-.069	.132	.417	-.510	130	321	-.480	.355	.497	-1.821	130	413	-.185	.118	.183	-.737
130	244	.141	.153	.723	-.429	130	322	.118	.233	.871	-.661	130	414	-.144	.125	.251	-.603
130	245	.147	.152	.705	-.349	130	323	.379	.225	1.153	-.496	130	415	-.156	.138	.280	-.909
130	246	.166	.157	.746	-.264	130	324	.432	.246	1.280	-.294	130	416	-.311	.203	.294	-.997
130	247	.159	.163	.986	-.388	130	325	-.352	.188	.223	-1.063	130	417	-.580	.266	.194	-1.458
130	248	.127	.155	.755	-.358	130	326	-.281	.305	.391	-1.637	130	418	-.670	.232	.003	-1.460
130	249	.068	.153	.641	-.434	130	327	-.390	.364	.528	-1.732	130	419	-.668	.253	.128	-1.795
130	250	-.048	.145	.391	-.532	130	328	.088	.240	.883	-.714	130	420	-.201	.122	.204	-.622
130	251	-.131	.126	.253	-.661	130	329	.255	.210	1.177	-.345	130	421	-.201	.135	.306	-.817
130	252	.074	.141	.655	-.497	130	330	.313	.247	1.158	-.551	130	422	-.171	.150	.247	-.779
130	253	.092	.131	.589	-.383	130	331	-.318	.211	.279	-1.277	130	423	-.227	.202	.385	-1.206
130	254	.138	.138	.726	-.265	130	332	-.253	.323	.446	-1.866	130	424	-.364	.241	.261	-1.218
130	255	.163	.165	.853	-.459	130	333	-.389	.395	.602	-1.850	130	425	-.472	.228	.251	-1.519
130	256	.105	.145	.623	-.434	130	334	-.007	.158	.489	-.544	130	426	-.518	.194	.043	-1.359
130	257	-.057	.136	.477	-.501	130	335	.147	.197	.921	-.446	130	427	-.509	.200	.088	-1.313
130	258	-.144	.136	.377	-.879	130	336	.144	.244	.926	-.949	130	428	-.224	.141	.178	-.952
130	259	-.178	.140	.267	-.718	130	337	-.211	.206	.360	-1.354	130	429	-.192	.131	.187	-.779
130	260	.051	.132	.529	-.418	130	338	-.197	.293	.463	-2.245	130	430	-.168	.149	.242	-.905

WD	TAP	CPMEAN	CPRMS	CPMAX	CPMIN	WD	TAP	CPMEAN	CPRMS	CPMAX	CPMIN	WD	TAP	CPMEAN	CPRMS	CPMAX	CPMIN
130	431	-.204	.201	.304	-1.092	130	509	-.249	.121	.194	-.692	130	625	-.309	.134	.165	-.835
130	432	-.284	.251	.237	-1.354	130	510	-.252	.126	.097	-.689	130	626	-.379	.156	.120	-1.166
130	433	-.448	.275	.278	-1.785	130	511	-.241	.121	.127	-.765	130	627	-.366	.169	.059	-1.308
130	434	-.554	.247	.247	-1.766	130	512	-.244	.134	.209	-.857	130	628	-.325	.151	.173	-1.066
130	435	-.533	.203	.049	-1.561	130	513	-.285	.133	.127	-.794	130	629	-.396	.164	.122	-.988
130	436	-.232	.128	.143	-.790	130	514	-.270	.114	.140	-.648	130	630	-.404	.167	.092	-1.131
130	437	-.201	.132	.290	-.878	130	515	-.260	.124	.116	-.892	130	631	-.357	.155	.112	-.923
130	438	-.142	.130	.266	-.919	130	516	-.268	.133	.245	-.789	130	632	-.374	.145	.140	-.917
130	439	-.147	.175	.287	-1.074	130	517	-.321	.146	.054	-1.076	130	633	-.371	.149	.059	-.912
130	440	-.213	.234	.328	-1.328	130	518	-.323	.136	.070	-.796	130	634	-.357	.170	.289	-1.258
130	441	-.350	.280	.306	-1.730	130	519	-.301	.129	.161	-.706	130	801	-.020	.171	.483	-.828
130	442	-.481	.249	.231	-1.299	130	520	-.282	.124	.082	-.849	130	802	-.030	.149	.401	-.719
130	443	-.522	.265	.185	-1.651	130	521	-.365	.170	.108	-1.208	130	803	-.263	.119	.163	-.828
130	444	-.240	.144	.223	-.761	130	522	-.381	.174	.063	-1.200	130	804	-.425	.172	.077	-1.161
130	445	-.189	.126	.233	-.685	130	523	-.330	.160	.168	-1.067	130	805	-.312	.138	.103	-.798
130	446	-.116	.119	.268	-.556	130	524	-.321	.144	.138	-.905	130	806	-.379	.153	.057	-1.063
130	447	-.096	.131	.362	-.802	130	525	-.370	.163	.198	-1.018	130	807	-.430	.159	.040	-1.002
130	448	-.113	.162	.340	-.883	130	526	-.438	.199	.108	-1.440	130	808	-.393	.154	-.002	-.956
130	449	-.173	.220	.287	-1.176	130	527	-.421	.192	.028	-1.426	130	809	-.298	.146	.150	-.912
130	450	-.358	.251	.230	-1.828	130	528	-.456	.203	.096	-1.655	130	810	-.279	.134	.092	-.814
130	451	-.382	.258	.182	-1.998	130	529	-.364	.139	.144	-.933	130	811	-.263	.128	.168	-.758
130	452	-.258	.140	.109	-.765	130	530	-.344	.139	.168	-.926	130	812	-.294	.133	.115	-.770
130	453	-.208	.131	.130	-.789	130	531	-.301	.124	.077	-.845	130	813	-.314	.141	.143	-.893
130	454	-.163	.116	.245	-.613	130	532	-.292	.133	.144	-.748	130	814	-.488	.191	.040	-1.322
130	455	-.084	.116	.297	-.606	130	533	-.318	.129	.103	-.865	130	815	-.378	.153	.126	-1.016
130	456	-.097	.160	.452	-1.427	130	534	-.296	.127	.094	-.796	130	901	-.752	.287	.051	-2.180
130	457	-.106	.167	.311	-.947	130	601	-.237	.129	.216	-.775	130	902	-.636	.232	-.002	-1.490
130	458	-.179	.184	.295	-1.117	130	602	-.224	.127	.182	-.652	130	903	-.359	.240	.378	-1.264
130	459	-.224	.209	.338	-1.288	130	603	-.247	.134	.265	-.778	130	904	-.332	.197	.190	-1.432
130	460	-.166	.122	.242	-.664	130	604	-.244	.126	.253	-.706	130	905	-.456	.205	.133	-1.211
130	461	-.108	.125	.281	-.697	130	605	-.237	.127	.149	-.727	130	906	-.458	.199	.083	-1.240
130	462	-.065	.133	.332	-.660	130	606	-.239	.123	.191	-.606	130	907	-.227	.156	.275	-.764
130	463	-.095	.137	.316	-.617	130	607	-.236	.116	.160	-.592	130	908	-.276	.165	.200	-.890
130	464	-.089	.145	.343	-.655	130	608	-.221	.114	.145	-.595	130	909	-.246	.134	.222	-.830
130	465	-.134	.167	.362	-1.041	130	609	-.215	.112	.170	-.674	130	910	-.309	.173	.166	-1.082
130	466	-.089	.113	.353	-.460	130	610	-.229	.111	.149	-.633	130	911	-.229	.144	.378	-.738
130	467	-.083	.112	.311	-.530	130	611	-.223	.117	.171	-.590	130	912	-.058	.166	.462	-.830
130	468	-.058	.130	.369	-.889	130	612	-.215	.110	.208	-.618	130	913	-.263	.158	.298	-1.052
130	469	-.075	.138	.392	-.833	130	613	-.221	.120	.124	-.591	130	914	-.260	.144	.203	-.765
130	470	-.112	.152	.346	-.787	130	614	-.216	.112	.135	-.637	130	915	-.136	.173	.414	-.776
130	471	-.104	.151	.387	-.641	130	615	-.241	.123	.219	-.639	130	916	-.243	.146	.232	-1.472
130	472	-.234	.129	.194	-.666	130	616	-.234	.131	.227	-.633	130	917	-.256	.151	.310	-1.094
130	501	-.256	.133	.113	-.866	130	617	-.217	.129	.222	-.719	130	918	-.228	.144	.220	-.944
130	502	-.255	.136	.218	-.761	130	618	-.235	.128	.161	-.704	130	919	-.122	.153	.388	-.793
130	503	-.251	.139	.272	-.946	130	619	-.240	.130	.224	-.740	130	920	-.083	.157	.361	-.782
130	504	-.224	.132	.165	-.785	130	620	-.273	.131	.112	-.835	130	921	-.041	.156	.498	-.776
130	505	-.250	.124	.125	-.701	130	621	-.312	.138	.112	-.768	130	1101	-.267	.126	.094	-.764
130	506	-.236	.133	.211	-.701	130	622	-.294	.133	.138	-.746	130	1102	-.243	.169	.356	-.816
130	507	-.236	.136	.195	-.679	130	623	-.311	.141	.203	-.824	130	1103	-.199	.135	.211	-.808
130	508	-.229	.122	.185	-.725	130	624	-.325	.136	.092	-1.033	130	1104	-.281	.121	.011	-.737

WD	TAP	CPMEAN	CPRMS	CPMAX	CPMIN	WD	TAP	CPMEAN	CPRMS	CPMAX	CPMIN	WD	TAP	CPMEAN	CPRMS	CPMAX	CPMIN
130	1105	-.324	.139	.122	-.815	130	1229	.030	.131	.635	-.366	130	1420	-.118	.146	.340	-.680
130	1106	-.322	.152	.127	-.897	130	1301	-.289	.141	.182	-.873	130	1421	-.140	.147	.335	-.869
130	1107	-.284	.122	.042	-.828	130	1302	-.090	.155	.538	-.668	130	1422	-.223	.180	.210	-.952
130	1108	-.143	.139	.261	-.621	130	1303	-.078	.150	.521	-.763	130	1423	-.206	.154	.215	-.879
130	1109	-.109	.107	.295	-.501	130	1304	-.263	.109	.083	-.650	130	1424	-.184	.164	.280	-.861
130	1110	-.319	.138	.085	-.855	130	1305	-.109	.106	.301	-.488	130	1425	-.136	.137	.380	-.698
130	1111	-.102	.138	.360	-.597	130	1306	-.149	.103	.194	-.510	130	1426	-.090	.123	.388	-.535
130	1112	-.211	.124	.268	-.713	130	1307	-.243	.116	.122	-.643	130	1427	-.191	.166	.275	-.766
130	1113	-.282	.137	.407	-.760	130	1308	-.315	.146	.124	-.852	130	1428	-.173	.145	.282	-1.079
130	1114	-.059	.170	.591	-.592	130	1309	-.278	.116	.135	-.747	130	1429	-.184	.137	.302	-.745
130	1115	-.081	.122	.373	-.464	130	1311	-.140	.115	.241	-.531	130	1430	-.162	.148	.247	-.741
130	1116	-.058	.109	.394	-.500	130	1312	-.132	.112	.196	-.474	130	1431	-.111	.129	.295	-.750
130	1117	-.161	.125	.202	-.639	130	1313	-.194	.107	.173	-.596	130	1432	-.088	.121	.284	-.574
130	1118	-.039	.141	.491	-.492	130	1314	-.239	.111	.111	-.614	130	1433	-.115	.138	.345	-.922
130	1119	-.247	.156	.143	-1.216	130	1315	-.252	.108	.083	-.565	130	1434	-.104	.136	.308	-.590
130	1120	-.157	.120	.302	-.509	130	1316	-.269	.115	.082	-.622	130	1435	-.096	.126	.299	-.582
130	1121	-.153	.138	.316	-.602	130	1317	-.072	.116	.388	-.383	130	1901	-.244	.170	.223	-.843
130	1122	.177	.183	.935	-.414	130	1318	-.210	.107	.118	-.575	130	1902	-.016	.121	.367	-.500
130	1123	-.050	.121	.494	-.474	130	1319	-.176	.115	.166	-.539	130	1903	.103	.126	.473	-.577
130	1124	-.176	.142	.290	-.752	130	1320	-.176	.118	.215	-.669	130	1904	-.135	.152	.197	-1.149
130	1125	.036	.133	.552	-.363	130	1321	-.239	.122	.132	-.666	130	1905	-.067	.113	.295	-.465
130	1126	-.087	.125	.292	-.633	130	1322	-.239	.112	.144	-.601	130	1906	-.199	.128	.159	-.724
130	1201	-.278	.127	.160	-.706	130	1323	-.272	.115	.082	-.758	130	1907	-.311	.131	.085	-.787
130	1202	-.318	.174	.134	-1.181	130	1324	-.005	.103	.361	-.320	130	1908	-.316	.131	.080	-.787
130	1203	-.279	.161	.175	-1.085	130	1325	-.030	.104	.382	-.424	130	1909	-.309	.125	.084	-.770
130	1204	-.242	.116	.102	-.694	130	1326	-.112	.108	.220	-.491	130	1910	-.425	.184	.090	-1.334
130	1205	-.297	.180	.219	-1.137	130	1327	-.223	.113	.200	-.630	130	1911	-.129	.120	.237	-.597
130	1206	-.292	.173	.143	-1.409	130	1328	-.231	.111	.183	-.681	130	1912	-.233	.138	.166	-.839
130	1207	-.213	.123	.131	-.827	130	1329	-.289	.129	.116	-.788	130	1913	-.377	.160	.046	-1.059
130	1208	-.250	.128	.171	-.682	130	1330	-.072	.120	.395	-.583	130	1914	-.145	.133	.235	-.675
130	1209	-.247	.119	.142	-.607	130	1331	-.061	.120	.337	-.530	130	1915	-.114	.114	.265	-.589
130	1210	-.283	.138	.124	-.788	130	1401	-.242	.136	.157	-.686	130	1916	-.309	.139	.115	-.942
130	1211	-.277	.129	.097	-.719	130	1402	-.258	.147	.278	-.815	130	1917	-.303	.132	.120	-.787
130	1212	-.217	.110	.102	-.588	130	1403	-.212	.144	.200	-.812	130	1918	-.313	.122	.051	-.714
130	1213	-.267	.133	.110	-.754	130	1404	-.168	.131	.228	-1.251	130	1919	-.348	.146	.033	-.961
130	1214	-.085	.134	.276	-.566	130	1405	-.194	.130	.246	-.765	130	1920	-.290	.137	.169	-.937
130	1215	-.227	.115	.141	-.714	130	1406	-.153	.134	.297	-.619	130	1921	-.193	.130	.217	-.721
130	1216	-.245	.132	.097	-.692	130	1407	-.136	.143	.332	-.682	130	1922	-.342	.164	.095	-1.428
130	1217	-.201	.118	.168	-.636	130	1408	-.152	.143	.241	-.698	130	1923	-.339	.158	.062	-.966
130	1218	-.147	.120	.223	-.618	130	1409	-.299	.140	.122	-.853	130	1924	-.290	.127	.059	-.768
130	1219	-.082	.152	.402	-.626	130	1410	-.262	.131	.200	-.809	130	1925	-.353	.141	.095	-.882
130	1220	-.270	.126	.160	-.754	130	1411	-.166	.144	.263	-.660	130	1926	-.263	.118	.080	-.707
130	1221	-.214	.119	.206	-.694	130	1412	-.153	.134	.259	-.710	130	1927	-.236	.140	.140	-.967
130	1222	-.141	.145	.251	-.644	130	1413	-.130	.131	.362	-.546	130	1928	-.301	.155	.100	-1.193
130	1223	.152	.163	.826	-.417	130	1414	-.325	.148	.155	-.824	130	1929	-.306	.137	.123	-.963
130	1224	-.102	.114	.299	-.424	130	1415	-.315	.149	.096	-.923	130	1930	-.292	.122	.069	-.638
130	1225	-.201	.127	.257	-.566	130	1416	-.171	.138	.185	-.763	130	1931	-.305	.126	.040	-.827
130	1226	-.291	.139	.148	-.765	130	1417	-.158	.138	.244	-.619	130	1932	-.297	.121	.060	-.676
130	1227	-.097	.133	.342	-.683	130	1418	-.119	.127	.273	-.592	130	1933	-.173	.125	.240	-.609
130	1228	.239	.215	1.027	-.462	130	1419	-.123	.125	.243	-.659	130	1934	-.244	.148	.213	-.795

WD	TAP	CPMEAN	CPRMS	CPMAX	CPMIN	WD	TAP	CPMEAN	CPRMS	CPMAX	CPMIN	WD	TAP	CPMEAN	CPRMS	CPMAX	CPMIN
130	1935	-.286	.139	.062	-1.118	140	117	-.145	.119	.221	-.524	140	167	-.202	.126	.136	-.640
130	1936	-.303	.130	.085	-.766	140	118	-.137	.111	.226	-.557	140	168	-.187	.129	.181	-.597
130	1937	-.305	.122	.060	-.800	140	119	-.119	.118	.380	-.576	140	169	-.211	.120	.194	-.649
130	1938	-.265	.124	.122	-.794	140	120	-.130	.143	.295	-.754	140	170	-.215	.119	.179	-.666
130	1939	-.285	.126	.085	-.756	140	121	-.136	.118	.230	-.557	140	171	-.223	.116	.190	-.619
130	1940	-.182	.123	.177	-.679	140	122	-.135	.123	.328	-.607	140	172	-.245	.121	.123	-.743
130	1941	-.204	.123	.175	-.701	140	123	-.152	.113	.206	-.539	140	173	-.244	.123	.068	-.707
130	1942	-.268	.125	.054	-.666	140	124	-.161	.108	.189	-.552	140	174	-.226	.120	.173	-.668
130	1943	-.266	.115	.137	-.669	140	125	-.149	.110	.239	-.530	140	175	-.219	.121	.186	-.600
130	1944	-.278	.110	.070	-.633	140	126	-.146	.112	.218	-.490	140	176	-.184	.111	.209	-.554
130	1945	-.192	.112	.143	-.682	140	127	-.136	.117	.273	-.567	140	177	-.188	.105	.201	-.520
130	1946	-.280	.127	.187	-.714	140	128	-.130	.111	.248	-.507	140	178	-.217	.116	.130	-.640
130	1947	-.306	.126	.067	-.756	140	129	-.131	.119	.256	-.600	140	179	-.240	.127	.225	-.613
130	1948	-.273	.118	.070	-.661	140	130	-.139	.108	.241	-.475	140	180	-.242	.122	.138	-.758
130	1949	-.282	.117	.073	-.675	140	131	-.147	.119	.250	-.512	140	181	-.184	.112	.201	-.523
130	1950	-.279	.115	.066	-.641	140	132	-.150	.114	.203	-.608	140	182	-.173	.109	.202	-.536
130	1951	-.235	.135	.119	-1.018	140	133	-.150	.118	.230	-.610	140	183	-.222	.113	.123	-.574
130	1952	-.319	.166	.119	-.933	140	134	-.161	.118	.267	-.572	140	184	-.241	.131	.204	-.740
130	1953	-.348	.135	.071	-.842	140	135	-.154	.116	.280	-.587	140	185	-.179	.108	.160	-.587
130	1954	-.278	.118	.073	-.613	140	136	-.164	.115	.340	-.546	140	186	-.168	.115	.161	-.602
130	1955	-.281	.117	.066	-.693	140	137	-.154	.129	.292	-.582	140	187	-.221	.124	.135	-.674
130	1956	-.255	.114	.117	-.617	140	138	-.152	.120	.258	-.589	140	201	-.070	.271	.718	-1.130
130	1957	-.295	.122	.054	-.797	140	139	-.148	.111	.308	-.494	140	202	-.346	.215	.531	-1.409
130	1958	-.289	.124	.126	-.690	140	140	-.160	.123	.260	-.700	140	203	-.205	.168	.254	-1.141
130	1959	-.269	.111	.044	-.733	140	141	-.160	.113	.241	-.527	140	204	.200	.230	.948	-.851
130	1960	-.298	.122	.083	-.671	140	142	-.160	.112	.209	-.563	140	205	.185	.199	.931	-.756
130	1961	-.273	.113	.033	-.638	140	143	-.174	.117	.241	-.527	140	206	.116	.172	.704	-.642
130	1962	-.209	.130	.243	-.824	140	144	-.160	.121	.235	-.644	140	207	.103	.156	.521	-.432
130	1963	-.189	.109	.149	-.555	140	145	-.158	.115	.209	-.520	140	208	.092	.150	.605	-.453
130	1964	-.212	.116	.134	-.582	140	146	-.155	.124	.292	-.542	140	209	.059	.143	.617	-.460
130	1965	-.288	.126	.131	-.810	140	147	-.153	.117	.232	-.520	140	210	.005	.133	.474	-.552
130	1966	-.277	.114	.025	-.665	140	148	-.150	.117	.239	-.548	140	211	-.044	.133	.402	-.505
130	1967	-.269	.117	.136	-.686	140	149	-.164	.122	.217	-.557	140	212	.332	.259	.998	-.728
130	1968	-.280	.125	.145	-.643	140	150	-.166	.112	.301	-.518	140	213	.338	.246	1.146	-.664
140	101	-.197	.145	.300	-.707	140	151	-.171	.128	.284	-.587	140	214	.272	.214	1.055	-.435
140	102	-.216	.142	.180	-.815	140	152	-.194	.117	.196	-.632	140	215	.256	.186	.839	-.322
140	103	-.281	.189	.348	-1.146	140	153	-.237	.120	.149	-.631	140	216	.203	.170	.817	-.397
140	104	-.147	.122	.254	-.557	140	154	-.158	.135	.245	-.614	140	217	.143	.144	.718	-.309
140	105	-.147	.133	.335	-.648	140	155	-.148	.128	.305	-.582	140	218	.043	.131	.465	-.434
140	106	-.158	.126	.274	-.585	140	156	-.162	.121	.205	-.615	140	219	-.048	.116	.334	-.472
140	107	-.156	.128	.260	-.628	140	157	-.165	.122	.292	-.576	140	220	.330	.264	1.293	-.861
140	108	-.148	.129	.267	-.569	140	158	-.174	.128	.217	-.591	140	221	.310	.231	1.325	-.683
140	109	-.138	.126	.310	-.546	140	159	-.195	.115	.188	-.651	140	222	.294	.201	1.020	-.285
140	110	-.139	.126	.261	-.617	140	160	-.215	.136	.209	-.814	140	223	.253	.194	.981	-.346
140	111	-.140	.127	.295	-.650	140	161	-.196	.121	.183	-.651	140	224	.198	.157	.796	-.247
140	112	-.145	.132	.269	-.874	140	162	-.216	.125	.230	-.685	140	225	.107	.148	.665	-.343
140	113	-.161	.125	.234	-.822	140	163	-.225	.131	.175	-.642	140	226	.009	.116	.398	-.354
140	114	-.161	.130	.248	-.604	140	164	-.224	.122	.129	-.659	140	227	-.062	.125	.398	-.462
140	115	-.142	.116	.248	-.570	140	165	-.185	.124	.325	-.668	140	228	.241	.227	1.097	-.754
140	116	-.151	.117	.235	-.518	140	166	-.202	.157	.220	-.741	140	229	.256	.216	1.140	-.588

WD	TAP	CPMEAN	CPRMS	CPMAX	CPMIN	WD	TAP	CPMEAN	CPRMS	CPMAX	CPMIN	WD	TAP	CPMEAN	CPRMS	CPMAX	CPMIN
140	230	.257	.208	1.000	-.277	140	308	.014	.210	.754	-1.179	140	358	.038	.128	.486	-.324
140	231	.211	.169	.744	-.352	140	309	-.011	.303	.798	-1.299	140	401	-.206	.128	.164	-.702
140	232	.160	.157	.676	-.320	140	310	.315	.251	1.410	-.600	140	402	-.245	.196	.318	-1.171
140	233	.095	.152	.678	-.412	140	311	.368	.258	1.218	-.425	140	403	-.405	.205	.169	-1.328
140	234	-.002	.136	.478	-.524	140	312	.396	.269	1.382	-.626	140	404	-.168	.136	.276	-.669
140	235	-.064	.119	.345	-.457	140	313	-.167	.192	.553	-.932	140	405	-.131	.130	.271	-.666
140	236	.136	.176	.792	-.425	140	314	-.014	.209	.682	-1.203	140	406	-.104	.142	.355	-.688
140	237	.167	.187	1.084	-.588	140	315	-.037	.332	.997	-1.110	140	407	-.096	.145	.376	-.754
140	238	.140	.171	.897	-.371	140	316	.277	.211	.956	-.642	140	408	-.134	.183	.402	-1.161
140	239	.113	.141	.783	-.387	140	317	.353	.230	1.228	-.327	140	409	-.264	.228	.337	-1.376
140	240	.097	.170	.783	-.358	140	318	.388	.258	1.218	-.324	140	410	-.463	.253	.438	-1.543
140	241	.045	.134	.504	-.520	140	319	-.164	.187	.507	-.991	140	411	-.435	.219	.464	-1.304
140	242	-.019	.128	.458	-.402	140	320	-.057	.211	.687	-1.193	140	412	-.157	.111	.220	-.483
140	243	-.078	.121	.325	-.507	140	321	-.145	.335	.723	-1.582	140	413	-.132	.112	.344	-.518
140	244	.048	.136	.517	-.427	140	322	.154	.183	.995	-.557	140	414	-.082	.121	.323	-.480
140	245	.050	.133	.575	-.348	140	323	.292	.197	1.122	-.307	140	415	-.074	.123	.388	-.618
140	246	.038	.125	.615	-.345	140	324	.315	.234	1.122	-.367	140	416	-.119	.171	.356	-.803
140	247	.026	.116	.443	-.340	140	325	-.184	.190	.503	-.991	140	417	-.289	.268	.347	-1.493
140	248	.013	.131	.614	-.434	140	326	-.050	.206	.599	-1.256	140	418	-.457	.231	.220	-1.214
140	249	-.018	.117	.457	-.378	140	327	-.098	.285	.719	-1.792	140	419	-.431	.226	.332	-1.257
140	250	-.073	.117	.428	-.388	140	328	.114	.164	.968	-.543	140	420	-.162	.124	.262	-.547
140	251	-.118	.108	.212	-.579	140	329	.216	.174	1.033	-.324	140	421	-.139	.115	.321	-.635
140	252	-.006	.115	.354	-.437	140	330	.209	.211	1.004	-.478	140	422	-.094	.116	.316	-.688
140	253	.019	.130	.474	-.403	140	331	-.104	.182	.372	-1.148	140	423	-.079	.132	.302	-.662
140	254	.036	.122	.478	-.365	140	332	-.018	.178	.491	-.925	140	424	-.125	.185	.324	-1.074
140	255	.034	.125	.497	-.367	140	333	-.054	.219	.445	-1.191	140	425	-.236	.238	.372	-1.533
140	256	.002	.120	.452	-.362	140	334	.070	.098	.451	-.227	140	426	-.377	.251	.311	-1.542
140	257	-.095	.110	.368	-.509	140	335	.115	.157	.790	-.379	140	427	-.377	.231	.535	-1.412
140	258	-.150	.117	.207	-.682	140	336	.106	.173	1.175	-.495	140	428	-.163	.108	.138	-.626
140	259	-.182	.125	.324	-.662	140	337	-.036	.155	.442	-.881	140	429	-.146	.119	.211	-.681
140	260	.011	.114	.403	-.380	140	338	.014	.172	.557	-1.378	140	430	-.098	.122	.307	-.669
140	261	.028	.124	.439	-.487	140	339	.005	.176	.505	-1.373	140	431	-.074	.145	.374	-.959
140	262	.033	.115	.438	-.370	140	340	.044	.131	.577	-.483	140	432	-.096	.189	.409	-1.286
140	263	.042	.109	.515	-.283	140	341	.056	.131	.666	-.367	140	433	-.170	.230	.312	-1.564
140	264	-.011	.115	.400	-.355	140	342	.045	.138	.579	-.420	140	434	-.283	.256	.343	-1.328
140	265	-.083	.108	.431	-.454	140	343	.016	.121	.378	-.540	140	435	-.339	.242	.349	-1.407
140	266	.052	.128	.681	-.311	140	344	.038	.122	.470	-.752	140	436	-.192	.118	.197	-.603
140	267	.050	.127	.653	-.386	140	345	.026	.126	.457	-.683	140	437	-.154	.121	.209	-.598
140	268	.056	.127	.535	-.301	140	346	.023	.130	.526	-.398	140	438	-.091	.122	.352	-.657
140	269	.040	.127	.446	-.378	140	347	.030	.117	.502	-.443	140	439	-.051	.119	.381	-.548
140	270	.033	.129	.599	-.367	140	348	.014	.132	.580	-.471	140	440	-.046	.139	.361	-.788
140	271	.017	.130	.482	-.431	140	349	.027	.116	.418	-.352	140	441	-.092	.192	.424	-1.202
140	272	-.137	.111	.188	-.503	140	350	.041	.121	.512	-.345	140	442	-.213	.226	.454	-1.281
140	301	-.138	.191	.633	-.766	140	351	.023	.112	.390	-.620	140	443	-.199	.214	.383	-1.321
140	302	-.068	.205	.911	-.814	140	352	.022	.113	.385	-.415	140	444	-.201	.121	.239	-.640
140	303	-.083	.285	1.016	-1.673	140	353	.033	.113	.405	-.346	140	445	-.139	.114	.215	-.647
140	304	.247	.254	1.249	-.672	140	354	.023	.116	.451	-.327	140	446	-.077	.118	.302	-.514
140	305	.273	.240	1.258	-.405	140	355	.034	.116	.458	-.349	140	447	-.037	.107	.309	-.427
140	306	.233	.224	1.042	-.462	140	356	.028	.115	.400	-.350	140	448	-.008	.112	.419	-.480
140	307	-.138	.188	.531	-.968	140	357	.038	.117	.427	-.370	140	449	-.012	.135	.387	-.781

WD	TAP	CPMEAN	CPRMS	CPMAX	CPMIN	WD	TAP	CPMEAN	CPRMS	CPMAX	CPMIN	WD	TAP	CPMEAN	CPRMS	CPMAX	CPMIN
140	450	-.110	.204	.380	-1.414	140	528	-.338	.175	.116	-1.085	140	810	-.224	.117	.120	-.682
140	451	-.090	.181	.369	-1.040	140	529	-.278	.123	.104	-.749	140	811	-.237	.114	.131	-.675
140	452	-.162	.122	.356	-.563	140	530	-.297	.118	.066	-.721	140	812	-.223	.113	.194	-.758
140	453	-.117	.115	.295	-.528	140	531	-.240	.118	.098	-.732	140	813	-.203	.115	.220	-.723
140	454	-.076	.118	.290	-.521	140	532	-.231	.113	.144	-.754	140	814	-.352	.145	.085	-1.029
140	455	-.018	.112	.390	-.401	140	533	-.239	.120	.132	-.666	140	815	-.254	.138	.164	-.751
140	456	.013	.115	.428	-.325	140	534	-.242	.117	.182	-.622	140	901	-.531	.256	.241	-1.810
140	457	.015	.110	.376	-.648	140	601	-.159	.120	.228	-.648	140	902	-.401	.213	.245	-1.408
140	458	-.004	.133	.416	-.609	140	602	-.168	.119	.273	-.701	140	903	-.195	.205	.395	-1.061
140	459	-.020	.131	.440	-.607	140	603	-.183	.123	.210	-.638	140	904	-.319	.233	.282	-1.269
140	460	-.093	.114	.369	-.436	140	604	-.179	.127	.248	-.655	140	905	-.244	.200	.358	-1.198
140	461	-.036	.114	.349	-.441	140	605	-.174	.116	.222	-.592	140	906	-.302	.205	.347	-1.135
140	462	.008	.111	.471	-.443	140	606	-.175	.119	.269	-.638	140	907	-.105	.143	.304	-.685
140	463	.022	.117	.438	-.349	140	607	-.171	.123	.237	-.549	140	908	-.156	.162	.323	-.815
140	464	.011	.117	.509	-.413	140	608	-.184	.113	.182	-.560	140	909	-.238	.158	.202	-1.065
140	465	.002	.131	.357	-.747	140	609	-.171	.114	.179	-.659	140	910	-.210	.153	.278	-.885
140	466	-.050	.114	.284	-.466	140	610	-.163	.111	.181	-.603	140	911	-.181	.130	.317	-.659
140	467	-.034	.108	.375	-.413	140	611	-.179	.116	.199	-.591	140	912	-.048	.152	.400	-.670
140	468	.007	.110	.397	-.329	140	612	-.176	.112	.281	-.529	140	913	-.199	.163	.293	-.839
140	469	.011	.128	.458	-.430	140	613	-.173	.108	.248	-.549	140	914	-.179	.145	.547	-.778
140	470	.014	.116	.409	-.534	140	614	-.171	.114	.169	-.624	140	915	-.018	.148	.436	-.715
140	471	.014	.125	.415	-.380	140	615	-.180	.122	.296	-.733	140	916	-.160	.148	.302	-.865
140	472	-.155	.117	.225	-.559	140	616	-.183	.116	.151	-.582	140	917	-.177	.141	.278	-.726
140	501	-.196	.121	.244	-.654	140	617	-.158	.118	.205	-.652	140	918	-.169	.154	.437	-1.006
140	502	-.199	.113	.182	-.595	140	618	-.170	.116	.230	-.693	140	919	-.060	.130	.348	-.631
140	503	-.178	.116	.198	-.617	140	619	-.176	.115	.205	-.654	140	920	-.039	.129	.335	-.485
140	504	-.188	.115	.208	-.571	140	620	-.180	.123	.260	-.822	140	921	.006	.146	.521	-.502
140	505	-.199	.125	.154	-.626	140	621	-.185	.114	.172	-.665	140	1101	-.203	.096	.090	-.533
140	506	-.201	.116	.179	-.619	140	622	-.193	.125	.148	-.662	140	1102	-.194	.119	.236	-.684
140	507	-.177	.110	.137	-.605	140	623	-.217	.129	.187	-.855	140	1103	-.183	.121	.237	-.618
140	508	-.189	.120	.177	-.662	140	624	-.213	.130	.245	-.741	140	1104	-.234	.122	.161	-.639
140	509	-.206	.120	.168	-.597	140	625	-.245	.127	.116	-.805	140	1105	-.260	.125	.119	-.821
140	510	-.210	.130	.194	-.664	140	626	-.249	.140	.225	-.715	140	1106	-.247	.121	.180	-.690
140	511	-.193	.130	.235	-.695	140	627	-.257	.135	.205	-1.204	140	1107	-.238	.117	.078	-.701
140	512	-.186	.113	.180	-.545	140	628	-.244	.130	.101	-.844	140	1108	-.161	.109	.226	-.566
140	513	-.221	.118	.127	-.654	140	629	-.287	.125	.065	-.768	140	1109	-.106	.113	.297	-.491
140	514	-.232	.122	.179	-.728	140	630	-.269	.130	.120	-.863	140	1110	-.229	.132	.156	-.676
140	515	-.215	.119	.154	-.642	140	631	-.269	.134	.164	-.784	140	1111	-.134	.117	.264	-.528
140	516	-.213	.122	.125	-.667	140	632	-.259	.128	.187	-.865	140	1112	-.190	.108	.138	-.559
140	517	-.251	.133	.158	-1.123	140	633	-.267	.139	.200	-.741	140	1113	-.237	.126	.156	-.731
140	518	-.242	.123	.161	-.925	140	634	-.253	.129	.141	-.720	140	1114	-.113	.124	.319	-.589
140	519	-.235	.121	.139	-.762	140	801	.017	.102	.350	-.297	140	1115	-.090	.110	.284	-.438
140	520	-.239	.117	.168	-.755	140	802	.022	.098	.332	-.313	140	1116	-.069	.107	.322	-.436
140	521	-.277	.140	.096	-1.025	140	803	-.186	.111	.212	-.588	140	1117	-.169	.121	.226	-.661
140	522	-.272	.133	.111	-.870	140	804	-.278	.148	.135	-1.154	140	1118	-.111	.113	.267	-.499
140	523	-.261	.130	.185	-.741	140	805	-.223	.117	.167	-.608	140	1119	-.210	.138	.141	-.846
140	524	-.244	.117	.121	-.615	140	806	-.251	.134	.144	-.893	140	1120	-.170	.107	.188	-.644
140	525	-.277	.144	.195	-.947	140	807	-.290	.149	.161	-.889	140	1121	-.175	.113	.232	-.523
140	526	-.296	.144	.154	-.903	140	808	-.275	.129	.153	-.749	140	1122	.040	.157	.806	-.501
140	527	-.306	.152	.091	-1.262	140	809	-.217	.120	.251	-.797	140	1123	-.079	.114	.335	-.501

WD	TAP	CPMEAN	CPRMS	CPMAX	CPMIN
140	1124	-.157	.131	.233	-1.019
140	1125	-.016	.125	.560	-.403
140	1126	-.073	.106	.283	-.446
140	1201	-.219	.110	.123	-.746
140	1202	-.246	.145	.224	-.821
140	1203	-.244	.137	.244	-.729
140	1204	-.205	.110	.100	-.667
140	1205	-.215	.150	.249	-.837
140	1206	-.253	.145	.251	-.756
140	1207	-.194	.120	.127	-.725
140	1208	-.180	.115	.158	-.540
140	1209	-.182	.098	.094	-.500
140	1210	-.201	.121	.208	-.689
140	1211	-.218	.099	.085	-.526
140	1212	-.191	.107	.173	-.588
140	1213	-.221	.115	.133	-.655
140	1214	-.058	.128	.368	-.535
140	1215	-.196	.114	.159	-.617
140	1216	-.185	.114	.181	-.558
140	1217	-.168	.112	.178	-.555
140	1218	-.154	.113	.210	-.615
140	1219	-.112	.114	.234	-.499
140	1220	-.204	.123	.177	-.595
140	1221	-.176	.116	.226	-.566
140	1222	-.153	.118	.258	-.635
140	1223	.008	.145	.889	-.407
140	1224	-.042	.116	.397	-.375
140	1225	-.166	.108	.170	-.518
140	1226	-.194	.114	.156	-.556
140	1227	-.140	.129	.260	-.566
140	1228	.073	.172	.945	-.387
140	1229	-.034	.107	.497	-.379
140	1301	-.207	.117	.171	-.653
140	1302	-.079	.135	.375	-.528
140	1303	-.076	.136	.387	-.486
140	1304	-.221	.109	.091	-.640
140	1305	-.078	.101	.266	-.469
140	1306	-.118	.111	.239	-.469
140	1307	-.183	.120	.218	-.575
140	1308	-.244	.117	.159	-.667
140	1309	-.230	.105	.134	-.540
140	1311	-.078	.109	.335	-.488
140	1312	-.081	.108	.325	-.414
140	1313	-.137	.101	.204	-.498
140	1314	-.177	.116	.219	-.605
140	1315	-.206	.106	.077	-.550
140	1316	-.205	.109	.081	-.560
140	1317	-.048	.107	.333	-.377
140	1318	-.149	.105	.164	-.459
140	1319	-.111	.107	.249	-.523
140	1320	-.100	.120	.294	-.511
140	1321	-.206	.108	.151	-.528
140	1322	-.209	.104	.141	-.555
140	1323	-.206	.112	.112	-.750
140	1324	.006	.097	.333	-.289
140	1325	-.015	.110	.309	-.356
140	1326	-.053	.115	.381	-.408
140	1327	-.132	.119	.306	-.525
140	1328	-.202	.101	.134	-.495
140	1329	-.220	.118	.131	-.663
140	1330	-.073	.109	.372	-.478
140	1331	-.062	.107	.378	-.415
140	1401	-.203	.119	.185	-.681
140	1402	-.229	.125	.167	-.695
140	1403	-.196	.125	.170	-.607
140	1404	-.142	.122	.277	-.656
140	1405	-.175	.122	.161	-.729
140	1406	-.136	.129	.306	-.600
140	1407	-.123	.123	.304	-.631
140	1408	-.119	.111	.210	-.589
140	1409	-.232	.130	.146	-.658
140	1410	-.197	.127	.202	-.613
140	1411	-.126	.127	.315	-.596
140	1412	-.118	.135	.272	-.607
140	1413	-.103	.116	.255	-.502
140	1414	-.227	.129	.137	-.747
140	1415	-.221	.127	.156	-.682
140	1416	-.133	.144	.362	-.613
140	1417	-.113	.131	.309	-.632
140	1418	-.120	.114	.245	-.481
140	1419	-.116	.122	.261	-.578
140	1420	-.160	.134	.341	-.597
140	1421	-.151	.136	.323	-.720
140	1422	-.146	.137	.218	-.698
140	1423	-.130	.130	.231	-.618
140	1424	-.116	.137	.331	-.780
140	1425	-.092	.128	.403	-.573
140	1426	-.076	.119	.299	-.455
140	1427	-.124	.127	.251	-.652
140	1428	-.125	.138	.323	-.721
140	1429	-.118	.125	.251	-.613
140	1430	-.117	.131	.327	-.730
140	1431	-.089	.126	.290	-.532
140	1432	-.084	.117	.351	-.476
140	1433	-.119	.119	.296	-.538
140	1434	-.079	.116	.295	-.568
140	1435	-.085	.123	.315	-.557
140	1901	-.173	.145	.269	-.799
140	1902	.012	.110	.327	-.504
140	1903	.104	.106	.460	-.537
140	1904	-.095	.118	.257	-.581
140	1905	-.054	.107	.282	-.416
140	1906	-.160	.115	.243	-.591
140	1907	-.240	.108	.085	-.705
140	1908	-.239	.126	.140	-.674
140	1909	-.241	.111	.193	-.614
140	1910	-.274	.128	.075	-.783
140	1911	-.133	.110	.198	-.552
140	1912	-.198	.117	.194	-.620
140	1913	-.267	.146	.143	-1.173
140	1914	-.130	.121	.214	-.690
140	1915	-.115	.108	.253	-.591
140	1916	-.232	.112	.118	-.844
140	1917	-.233	.120	.140	-.665
140	1918	-.224	.108	.141	-.675
140	1919	-.252	.121	.097	-.762
140	1920	-.229	.120	.103	-.692
140	1921	-.157	.103	.221	-.577
140	1922	-.237	.141	.130	-.884
140	1923	-.247	.127	.130	-.840
140	1924	-.221	.123	.148	-.848
140	1925	-.234	.118	.108	-.803
140	1926	-.211	.107	.088	-.616
140	1927	-.166	.114	.165	-.895
140	1928	-.220	.125	.143	-.777
140	1929	-.211	.119	.140	-.783
140	1930	-.204	.114	.158	-.721
140	1931	-.230	.107	.115	-.671
140	1932	-.219	.113	.081	-.629
140	1933	-.155	.108	.234	-.537
140	1934	-.172	.116	.147	-.698
140	1935	-.217	.118	.165	-.683
140	1936	-.231	.113	.090	-.721
140	1937	-.227	.120	.168	-.929
140	1938	-.210	.112	.138	-.583
140	1939	-.212	.105	.183	-.553
140	1940	-.148	.101	.163	-.536
140	1941	-.163	.119	.195	-.655
140	1942	-.214	.108	.168	-.604
140	1943	-.221	.100	.098	-.628
140	1944	-.224	.099	.051	-.542
140	1945	-.171	.100	.133	-.496
140	1946	-.238	.120	.168	-.780
140	1947	-.242	.117	.135	-.653
140	1948	-.212	.115	.172	-.574
140	1949	-.204	.104	.123	-.574
140	1950	-.216	.106	.080	-.599
140	1951	-.191	.109	.181	-.608
140	1952	-.269	.133	.061	-.763
140	1953	-.252	.124	.095	-.703

WD	TAP	CPMEAN	CPRMS	CPMAX	CPMIN	WD	TAP	CPMEAN	CPRMS	CPMAX	CPMIN	WD	TAP	CPMEAN	CPRMS	CPMAX	CPMIN
140	1954	-.209	.113	.140	-.765	150	136	-.120	.119	.231	-.531	150	186	-.159	.110	.223	-.557
140	1955	-.231	.102	.075	-.745	150	137	-.113	.114	.265	-.466	150	187	-.191	.112	.223	-.621
140	1956	-.203	.113	.136	-.598	150	138	-.113	.108	.261	-.571	150	201	-.217	.250	.649	-1.295
140	1957	-.244	.112	.165	-.616	150	139	-.114	.112	.276	-.471	150	202	-.205	.185	.346	-1.182
140	1958	-.228	.108	.121	-.581	150	140	-.124	.108	.222	-.475	150	203	-.131	.145	.360	-.902
140	1959	-.211	.107	.105	-.559	150	141	-.117	.113	.282	-.507	150	204	-.008	.263	.868	-.934
140	1960	-.230	.107	.080	-.566	150	142	-.126	.114	.231	-.514	150	205	.055	.227	.890	-1.055
140	1961	-.215	.114	.150	-.973	150	143	-.127	.115	.289	-.550	150	206	.071	.168	.752	-.699
140	1962	-.140	.115	.210	-.528	150	144	-.125	.116	.274	-.531	150	207	.077	.162	.748	-.484
140	1963	-.129	.096	.173	-.493	150	145	-.133	.110	.193	-.569	150	208	.050	.153	.583	-.467
140	1964	-.145	.098	.165	-.528	150	146	-.123	.119	.276	-.618	150	209	.036	.146	.553	-.565
140	1965	-.242	.120	.106	-.778	150	147	-.120	.118	.227	-.503	150	210	-.001	.133	.475	-.443
140	1966	-.218	.104	.130	-.603	150	148	-.117	.118	.261	-.588	150	211	-.037	.123	.392	-.456
140	1967	-.224	.101	.131	-.640	150	149	-.128	.112	.240	-.552	150	212	.090	.278	1.018	-1.048
140	1968	-.231	.111	.081	-.631	150	150	-.131	.116	.278	-.484	150	213	.160	.264	1.059	-1.031
150	101	-.154	.135	.462	-.959	150	151	-.139	.114	.222	-.543	150	214	.132	.168	.753	-.402
150	102	-.165	.133	.256	-.697	150	152	-.145	.110	.224	-.526	150	215	.146	.178	.838	-.409
150	103	-.228	.155	.382	-.937	150	153	-.173	.107	.201	-.566	150	216	.107	.157	.619	-.346
150	104	-.128	.129	.317	-.787	150	154	-.145	.130	.321	-.712	150	217	.070	.140	.548	-.409
150	105	-.128	.120	.254	-.629	150	155	-.127	.122	.291	-.603	150	218	-.001	.130	.456	-.435
150	106	-.129	.120	.233	-.566	150	156	-.136	.115	.257	-.590	150	219	-.060	.114	.373	-.531
150	107	-.115	.115	.202	-.530	150	157	-.144	.115	.199	-.509	150	220	.070	.238	.851	-.799
150	108	-.117	.121	.256	-.530	150	158	-.146	.118	.203	-.601	150	221	.107	.221	1.006	-.673
150	109	-.106	.119	.317	-.514	150	159	-.156	.117	.291	-.571	150	222	.121	.169	.757	-.512
150	110	-.106	.115	.375	-.623	150	160	-.144	.117	.239	-.558	150	223	.115	.162	.871	-.391
150	111	-.116	.124	.278	-.839	150	161	-.157	.119	.212	-.606	150	224	.090	.143	.847	-.353
150	112	-.125	.126	.259	-.625	150	162	-.153	.117	.210	-.520	150	225	.033	.135	.553	-.398
150	113	-.133	.127	.302	-.714	150	163	-.169	.118	.212	-.601	150	226	-.026	.117	.529	-.405
150	114	-.115	.115	.250	-.495	150	164	-.181	.130	.235	-.712	150	227	-.066	.115	.396	-.523
150	115	-.113	.111	.233	-.469	150	165	-.175	.124	.220	-.704	150	228	.023	.207	.654	-.746
150	116	-.105	.110	.211	-.465	150	166	-.176	.118	.261	-.588	150	229	.035	.190	.787	-1.055
150	117	-.109	.108	.220	-.543	150	167	-.170	.119	.227	-.546	150	230	.070	.149	.591	-.743
150	118	-.104	.124	.304	-.491	150	168	-.170	.107	.158	-.578	150	231	.068	.142	.596	-.426
150	119	-.110	.120	.280	-.577	150	169	-.172	.119	.207	-.591	150	232	.035	.131	.546	-.372
150	120	-.113	.115	.287	-.463	150	170	-.174	.118	.208	-.601	150	233	.005	.129	.544	-.445
150	121	-.113	.121	.304	-.489	150	171	-.191	.126	.250	-.610	150	234	-.041	.118	.381	-.510
150	122	-.118	.106	.222	-.502	150	172	-.198	.119	.157	-.747	150	235	-.072	.113	.267	-.434
150	123	-.122	.115	.241	-.508	150	173	-.212	.105	.137	-.754	150	236	-.041	.157	.572	-.838
150	124	-.130	.115	.285	-.573	150	174	-.188	.106	.154	-.559	150	237	-.018	.166	.656	-.827
150	125	-.127	.118	.295	-.478	150	175	-.184	.113	.229	-.537	150	238	.026	.143	.521	-.499
150	126	-.107	.123	.458	-.560	150	176	-.164	.107	.157	-.519	150	239	.028	.132	.641	-.434
150	127	-.114	.110	.240	-.464	150	177	-.177	.112	.184	-.594	150	240	.015	.125	.540	-.396
150	128	-.114	.113	.278	-.522	150	178	-.191	.112	.155	-.647	150	241	-.016	.121	.443	-.364
150	129	-.113	.108	.314	-.466	150	179	-.211	.106	.162	-.643	150	242	-.056	.119	.396	-.450
150	130	-.108	.107	.255	-.426	150	180	-.178	.116	.186	-.549	150	243	-.087	.116	.330	-.520
150	131	-.120	.112	.252	-.483	150	181	-.176	.113	.145	-.552	150	244	-.106	.180	.473	-1.087
150	132	-.121	.122	.317	-.597	150	182	-.167	.110	.214	-.583	150	245	-.083	.165	.394	-.737
150	133	-.109	.119	.299	-.548	150	183	-.205	.113	.209	-.547	150	246	-.046	.122	.409	-.526
150	134	-.130	.119	.276	-.563	150	184	-.195	.118	.167	-.594	150	247	-.034	.114	.280	-.423
150	135	-.121	.118	.278	-.584	150	185	-.168	.103	.189	-.559	150	248	-.043	.110	.327	-.403

WD	TAP	CPMEAN	CPRMS	CPMAX	CPMIN	WD	TAP	CPMEAN	CPRMS	CPMAX	CPMIN	WD	TAP	CPMEAN	CPRMS	CPMAX	CPMIN
150	249	-.067	.103	.308	-.440	150	327	.075	.169	.790	-.872	150	419	-.268	.238	.500	-1.416
150	250	-.104	.113	.295	-.448	150	328	.111	.152	.641	-.539	150	420	-.109	.112	.260	-.527
150	251	-.119	.099	.197	-.485	150	329	.111	.128	.704	-.339	150	421	-.086	.107	.328	-.471
150	252	-.108	.140	.281	-.647	150	330	.064	.160	.721	-.469	150	422	-.037	.107	.375	-.420
150	253	-.101	.146	.290	-.915	150	331	.066	.155	1.027	-.487	150	423	-.009	.122	.604	-.447
150	254	-.054	.122	.309	-.545	150	332	.095	.127	.723	-.553	150	424	.006	.134	.505	-.635
150	255	-.043	.102	.272	-.441	150	333	.066	.155	.613	-.579	150	425	-.025	.172	.559	-.742
150	256	-.054	.111	.295	-.481	150	334	.047	.084	.302	-.325	150	426	-.157	.257	.685	-1.190
150	257	-.099	.102	.277	-.453	150	335	.050	.122	.551	-.373	150	427	-.165	.234	.510	-1.084
150	258	-.136	.100	.232	-.460	150	336	-.004	.141	.515	-.634	150	428	-.120	.104	.252	-.491
150	259	-.152	.105	.267	-.529	150	337	.100	.138	.588	-.321	150	429	-.087	.106	.273	-.429
150	260	-.112	.141	.307	-.919	150	338	.106	.145	.584	-.376	150	430	-.046	.114	.332	-.402
150	261	-.063	.114	.303	-.483	150	339	.062	.119	.448	-.460	150	431	-.004	.122	.395	-.400
150	262	-.060	.116	.278	-.492	150	340	.012	.122	.380	-.572	150	432	.017	.113	.405	-.499
150	263	-.048	.114	.347	-.465	150	341	.011	.114	.436	-.394	150	433	.007	.175	.693	-1.051
150	264	-.072	.107	.386	-.438	150	342	-.051	.121	.465	-.471	150	434	-.054	.204	.641	-.833
150	265	-.114	.104	.253	-.483	150	343	.079	.128	.631	-.309	150	435	-.076	.203	.622	-1.088
150	266	-.080	.117	.386	-.447	150	344	.074	.128	.483	-.357	150	436	-.129	.116	.243	-.481
150	267	-.072	.126	.381	-.505	150	345	.048	.122	.492	-.358	150	437	-.089	.109	.290	-.467
150	268	-.041	.119	.308	-.485	150	346	-.018	.128	.524	-.570	150	438	-.036	.124	.348	-.433
150	269	-.030	.111	.387	-.374	150	347	-.017	.123	.395	-.640	150	439	.004	.114	.600	-.335
150	270	-.053	.105	.295	-.398	150	348	-.057	.113	.291	-.509	150	440	.024	.119	.481	-.403
150	271	-.055	.105	.275	-.433	150	349	.050	.120	.502	-.519	150	441	.043	.134	.541	-.792
150	272	-.137	.104	.207	-.508	150	350	.058	.119	.439	-.317	150	442	.023	.150	.668	-.816
150	301	.001	.190	.725	-.692	150	351	.036	.126	.498	-.460	150	443	-.013	.182	.471	-.729
150	302	.070	.184	.968	-.570	150	352	-.007	.124	.522	-.534	150	444	-.139	.109	.282	-.580
150	303	.087	.241	.919	-.790	150	353	-.008	.113	.370	-.470	150	445	-.095	.106	.258	-.569
150	304	.219	.244	1.145	-.412	150	354	-.031	.116	.338	-.473	150	446	-.033	.104	.335	-.364
150	305	.226	.242	1.159	-.347	150	355	.064	.126	.498	-.362	150	447	.016	.105	.359	-.320
150	306	.148	.220	.960	-.478	150	356	.058	.125	.654	-.390	150	448	.042	.108	.514	-.343
150	307	.010	.180	.773	-.584	150	357	-.008	.124	.453	-.431	150	449	.061	.115	.419	-.333
150	308	.137	.191	.858	-.822	150	358	.008	.110	.358	-.532	150	450	.049	.128	.719	-.430
150	309	.181	.227	.998	-.835	150	401	-.151	.117	.277	-.569	150	451	.056	.133	.621	-.454
150	310	.303	.230	1.106	-.466	150	402	-.127	.152	.277	-.782	150	452	-.137	.106	.285	-.577
150	311	.327	.253	1.196	-.304	150	403	-.344	.197	.393	-1.246	150	453	-.108	.111	.214	-.517
150	312	.237	.236	1.033	-.524	150	404	-.106	.110	.293	-.611	150	454	-.062	.110	.325	-.415
150	313	-.002	.182	.790	-.655	150	405	-.074	.115	.379	-.468	150	455	.012	.112	.401	-.464
150	314	.119	.190	.876	-.992	150	406	-.051	.118	.356	-.536	150	456	.060	.108	.506	-.288
150	315	.145	.250	1.006	-1.020	150	407	-.047	.123	.405	-.619	150	457	.076	.123	.530	-.449
150	316	.290	.215	1.128	-.554	150	408	-.041	.137	.497	-.761	150	458	.081	.129	.580	-.346
150	317	.302	.220	1.112	-.325	150	409	-.105	.187	.409	-1.072	150	459	.070	.114	.476	-.309
150	318	.242	.243	1.165	-.439	150	410	-.260	.237	.448	-1.294	150	460	-.075	.117	.275	-.478
150	319	-.012	.191	.667	-.677	150	411	-.307	.239	.492	-1.278	150	461	.012	.122	.422	-.384
150	320	.095	.180	.708	-.716	150	412	-.109	.104	.243	-.502	150	462	.060	.123	.520	-.379
150	321	.077	.216	.757	-1.132	150	413	-.075	.110	.372	-.412	150	463	.078	.121	.544	-.358
150	322	.163	.171	.882	-.558	150	414	-.039	.108	.350	-.357	150	464	.077	.121	.512	-.304
150	323	.174	.167	.911	-.259	150	415	-.010	.120	.477	-.409	150	465	.075	.126	.686	-.313
150	324	.152	.188	.805	-.352	150	416	-.016	.123	.429	-.499	150	466	-.004	.117	.446	-.426
150	325	.008	.181	.758	-.572	150	417	-.054	.198	.645	-.987	150	467	.010	.112	.398	-.365
150	326	.072	.158	.575	-.754	150	418	-.201	.246	.572	-1.206	150	468	.062	.117	.441	-.271

WD	TAP	CPMEAN	CPRMS	CPMAX	CPMIN
150	469	.083	.122	.628	-.352
150	470	.085	.119	.534	-.316
150	471	.084	.134	.660	-.353
150	472	-.134	.121	.233	-.592
150	501	-.150	.103	.171	-.530
150	502	-.150	.105	.204	-.502
150	503	-.131	.121	.312	-.588
150	504	-.143	.109	.216	-.570
150	505	-.145	.110	.275	-.536
150	506	-.141	.108	.250	-.496
150	507	-.148	.104	.193	-.533
150	508	-.131	.104	.206	-.459
150	509	-.150	.108	.216	-.478
150	510	-.147	.112	.260	-.470
150	511	-.138	.105	.233	-.567
150	512	-.137	.106	.245	-.475
150	513	-.158	.111	.175	-.511
150	514	-.151	.112	.174	-.493
150	515	-.156	.110	.225	-.490
150	516	-.146	.106	.175	-.504
150	517	-.175	.126	.195	-.551
150	518	-.170	.111	.169	-.586
150	519	-.172	.111	.169	-.643
150	520	-.166	.114	.191	-.741
150	521	-.205	.122	.251	-.667
150	522	-.201	.129	.366	-.759
150	523	-.185	.123	.164	-.630
150	524	-.205	.121	.189	-.649
150	525	-.233	.125	.110	-.818
150	526	-.238	.128	.108	-.779
150	527	-.228	.125	.165	-.818
150	528	-.249	.153	.228	-1.093
150	529	-.243	.120	.164	-.676
150	530	-.270	.115	.140	-.607
150	531	-.218	.116	.142	-.671
150	532	-.195	.109	.213	-.541
150	533	-.218	.115	.181	-.622
150	534	-.207	.112	.150	-.559
150	601	-.144	.112	.257	-.652
150	602	-.146	.118	.246	-.551
150	603	-.141	.115	.270	-.615
150	604	-.152	.121	.228	-.624
150	605	-.146	.115	.400	-.568
150	606	-.146	.117	.202	-.661
150	607	-.145	.114	.218	-.570
150	608	-.147	.121	.214	-.643
150	609	-.145	.105	.195	-.542
150	610	-.142	.105	.188	-.490
150	611	-.152	.109	.209	-.516
150	612	-.141	.108	.182	-.470
150	613	-.149	.111	.178	-.505
150	614	-.149	.111	.219	-.583
150	615	-.143	.101	.252	-.514
150	616	-.149	.116	.225	-.492
150	617	-.146	.115	.204	-.632
150	618	-.143	.109	.197	-.574
150	619	-.155	.114	.200	-.536
150	620	-.160	.116	.200	-.618
150	621	-.158	.114	.214	-.605
150	622	-.162	.118	.254	-.579
150	623	-.175	.116	.267	-.574
150	624	-.178	.120	.222	-.758
150	625	-.199	.113	.124	-.724
150	626	-.204	.114	.121	-.684
150	627	-.209	.115	.158	-.658
150	628	-.205	.126	.219	-.671
150	629	-.229	.104	.079	-.606
150	630	-.195	.124	.193	-.626
150	631	-.177	.118	.143	-.739
150	632	-.208	.117	.167	-.707
150	633	-.192	.105	.106	-.578
150	634	-.192	.110	.120	-.749
150	801	-.024	.113	.474	-.437
150	802	.023	.111	.415	-.453
150	803	-.168	.105	.210	-.519
150	804	-.180	.114	.202	-.539
150	805	-.183	.110	.172	-.603
150	806	-.185	.113	.141	-.588
150	807	-.228	.118	.165	-.695
150	808	-.207	.113	.121	-.704
150	809	-.187	.111	.274	-.556
150	810	-.196	.115	.177	-.608
150	811	-.199	.112	.219	-.564
150	812	-.196	.107	.175	-.521
150	813	-.198	.110	.178	-.574
150	814	-.268	.136	.128	-.924
150	815	-.240	.133	.210	-.675
150	901	-.351	.226	.345	-1.268
150	902	-.316	.196	.267	-1.613
150	903	-.087	.185	.447	-1.000
150	904	-.262	.192	.300	-1.127
150	905	-.128	.159	.505	-.956
150	906	-.153	.173	.297	-1.153
150	907	-.059	.144	.393	-1.076
150	908	-.063	.135	.339	-.645
150	909	-.209	.178	.425	-1.026
150	910	-.141	.142	.284	-1.138
150	911	-.136	.127	.267	-.558
150	912	-.095	.155	.440	-.693
150	913	-.093	.165	.445	-.803
150	914	-.130	.131	.447	-.677
150	915	-.016	.149	.451	-.629
150	916	-.117	.138	.391	-.701
150	917	-.118	.150	.328	-.746
150	918	-.090	.150	.538	-.744
150	919	-.068	.133	.337	-.489
150	920	-.059	.126	.363	-.606
150	921	-.027	.146	.467	-.551
150	1101	-.202	.105	.112	-.688
150	1102	-.177	.108	.217	-.570
150	1103	-.171	.107	.173	-.481
150	1104	-.192	.103	.151	-.511
150	1105	-.210	.110	.198	-.589
150	1106	-.214	.104	.103	-.581
150	1107	-.181	.111	.220	-.610
150	1108	-.160	.121	.248	-.667
150	1109	-.131	.106	.213	-.474
150	1110	-.163	.110	.240	-.587
150	1111	-.164	.103	.196	-.521
150	1112	-.187	.105	.135	-.669
150	1113	-.176	.106	.203	-.599
150	1114	-.133	.104	.236	-.486
150	1115	-.114	.107	.236	-.496
150	1116	-.093	.091	.243	-.419
150	1117	-.170	.100	.130	-.589
150	1118	-.148	.102	.180	-.505
150	1119	-.191	.117	.176	-.740
150	1120	-.162	.101	.145	-.582
150	1121	-.167	.097	.161	-.597
150	1122	-.103	.123	.497	-.457
150	1123	-.145	.104	.127	-.611
150	1124	-.137	.102	.217	-.544
150	1125	-.078	.108	.458	-.494
150	1126	-.092	.111	.247	-.502
150	1201	-.202	.100	.161	-.525
150	1202	-.209	.124	.149	-.674
150	1203	-.179	.119	.167	-.637
150	1204	-.183	.095	.208	-.495
150	1205	-.163	.126	.175	-.699
150	1206	-.181	.122	.169	-.642
150	1207	-.194	.111	.130	-.654
150	1208	-.155	.109	.268	-.525
150	1209	-.148	.100	.137	-.448
150	1210	-.160	.110	.237	-.554
150	1211	-.207	.110	.125	-.613
150	1212	-.181	.095	.105	-.517
150	1213	-.193	.106	.131	-.541
150	1214	-.018	.129	.478	-.435
150	1215	-.179	.108	.190	-.565
150	1216	-.146	.109	.158	-.485

WD	TAP	CPMEAN	CPRMS	CPMAX	CPMIN
150	1217	-.154	.105	.142	-.482
150	1218	-.150	.113	.206	-.525
150	1219	-.146	.106	.267	-.479
150	1220	-.164	.112	.131	-.500
150	1221	-.152	.102	.148	-.447
150	1222	-.154	.101	.121	-.520
150	1223	-.098	.112	.247	-.568
150	1224	-.032	.114	.364	-.399
150	1225	-.157	.106	.216	-.540
150	1226	-.159	.104	.168	-.484
150	1227	-.142	.101	.209	-.455
150	1228	-.090	.133	.465	-.484
150	1229	-.069	.107	.372	-.380
150	1301	-.216	.104	.122	-.584
150	1302	-.123	.122	.332	-.507
150	1303	-.114	.135	.282	-.567
150	1304	-.183	.110	.214	-.544
150	1305	-.049	.122	.321	-.463
150	1306	-.128	.102	.232	-.485
150	1307	-.164	.110	.207	-.532
150	1308	-.212	.103	.128	-.563
150	1309	-.192	.107	.125	-.541
150	1311	-.045	.121	.546	-.452
150	1312	-.087	.106	.222	-.453
150	1313	-.135	.091	.242	-.494
150	1314	-.172	.103	.222	-.586
150	1315	-.175	.109	.178	-.525
150	1316	-.182	.105	.160	-.527
150	1317	-.007	.107	.380	-.318
150	1318	-.137	.096	.163	-.435
150	1319	-.125	.098	.250	-.455
150	1320	-.112	.112	.258	-.448
150	1321	-.185	.104	.203	-.582
150	1322	-.179	.109	.168	-.574
150	1323	-.167	.107	.228	-.517
150	1324	.050	.131	.524	-.351
150	1325	-.026	.111	.484	-.398
150	1326	-.063	.117	.350	-.493
150	1327	-.157	.108	.222	-.712
150	1328	-.182	.103	.125	-.540
150	1329	-.166	.103	.195	-.463
150	1330	-.056	.116	.314	-.430
150	1331	-.036	.121	.510	-.412
150	1401	-.202	.114	.199	-.599
150	1402	-.185	.110	.182	-.589
150	1403	-.172	.119	.201	-.535
150	1404	-.161	.113	.241	-.540
150	1405	-.141	.121	.197	-.540
150	1406	-.119	.116	.218	-.497
150	1407	-.113	.126	.325	-.603
150	1408	-.133	.108	.222	-.446
150	1409	-.182	.116	.128	-.562
150	1410	-.157	.103	.148	-.474
150	1411	-.108	.112	.193	-.517
150	1412	-.107	.116	.276	-.605
150	1413	-.112	.113	.277	-.462
150	1414	-.185	.114	.172	-.605
150	1415	-.173	.107	.171	-.514
150	1416	-.091	.118	.274	-.551
150	1417	-.094	.107	.266	-.422
150	1418	-.087	.117	.312	-.505
150	1419	-.076	.110	.277	-.425
150	1420	-.125	.137	.313	-.580
150	1421	-.106	.141	.289	-.641
150	1422	-.121	.117	.225	-.631
150	1423	-.110	.116	.236	-.485
150	1424	-.079	.121	.250	-.472
150	1425	-.064	.117	.255	-.500
150	1426	-.055	.121	.319	-.428
150	1427	-.105	.119	.290	-.541
150	1428	-.092	.124	.212	-.492
150	1429	-.089	.113	.233	-.576
150	1430	-.080	.115	.247	-.472
150	1431	-.073	.116	.287	-.612
150	1432	-.063	.110	.298	-.410
150	1433	-.086	.102	.222	-.567
150	1434	-.087	.120	.327	-.496
150	1435	-.073	.112	.274	-.511
150	1901	-.134	.114	.251	-.559
150	1902	.030	.090	.318	-.244
150	1903	.114	.099	.405	-.253
150	1904	-.085	.093	.248	-.417
150	1905	-.059	.098	.263	-.376
150	1906	-.146	.108	.185	-.590
150	1907	-.190	.101	.127	-.553
150	1908	-.194	.110	.109	-.637
150	1909	-.188	.116	.179	-.551
150	1910	-.193	.100	.120	-.574
150	1911	-.134	.101	.238	-.530
150	1912	-.177	.102	.117	-.596
150	1913	-.198	.109	.114	-.776
150	1914	-.130	.093	.203	-.449
150	1915	-.127	.102	.284	-.486
150	1916	-.191	.097	.122	-.582
150	1917	-.197	.097	.098	-.509
150	1918	-.174	.099	.201	-.524
150	1919	-.184	.096	.115	-.546
150	1920	-.176	.101	.125	-.496
150	1921	-.189	.115	.148	-.617
150	1922	-.197	.110	.172	-.705
150	1923	-.193	.105	.122	-.559
150	1924	-.185	.111	.203	-.590
150	1925	-.210	.104	.140	-.575
150	1926	-.179	.090	.117	-.438
150	1927	-.164	.105	.202	-.489
150	1928	-.190	.105	.117	-.711
150	1929	-.186	.105	.201	-.546
150	1930	-.175	.108	.145	-.616
150	1931	-.173	.097	.142	-.436
150	1932	-.164	.099	.081	-.503
150	1933	-.170	.114	.212	-.605
150	1934	-.152	.100	.196	-.538
150	1935	-.184	.105	.199	-.663
150	1936	-.193	.099	.080	-.572
150	1937	-.178	.102	.119	-.521
150	1938	-.168	.098	.163	-.520
150	1939	-.166	.100	.176	-.569
150	1940	-.156	.102	.155	-.591
150	1941	-.170	.104	.178	-.685
150	1942	-.178	.100	.184	-.549
150	1943	-.177	.089	.098	-.490
150	1944	-.177	.088	.078	-.423
150	1945	-.179	.108	.170	-.680
150	1946	-.197	.106	.199	-.533
150	1947	-.183	.102	.135	-.565
150	1948	-.173	.110	.233	-.549
150	1949	-.193	.099	.147	-.509
150	1950	-.178	.090	.109	-.446
150	1951	-.209	.112	.137	-.731
150	1952	-.236	.118	.150	-.836
150	1953	-.216	.108	.184	-.568
150	1954	-.177	.108	.129	-.604
150	1955	-.180	.096	.135	-.442
150	1956	-.169	.104	.117	-.587
150	1957	-.197	.118	.182	-.587
150	1958	-.185	.099	.152	-.537
150	1959	-.176	.098	.174	-.529
150	1960	-.185	.098	.112	-.556
150	1961	-.170	.099	.134	-.480
150	1962	-.131	.107	.222	-.556
150	1963	-.126	.101	.220	-.470
150	1964	-.147	.096	.160	-.495
150	1965	-.201	.098	.086	-.538
150	1966	-.177	.099	.199	-.534
150	1967	-.176	.093	.143	-.506
150	1968	-.181	.102	.121	-.493
160	101	-.275	.166	.162	-1.116
160	102	-.197	.134	.220	-1.004
160	103	-.189	.141	.247	-.756
160	104	-.147	.123	.234	-.627

WD	TAP	CPMEAN	CPRMS	CPMAX	CPMIN	WD	TAP	CPMEAN	CPRMS	CPMAX	CPMIN	WD	TAP	CPMEAN	CPRMS	CPMAX	CPMIN
160	105	-.133	.121	.247	-.646	160	155	-.164	.117	.210	-.550	160	218	-.053	.121	.374	-.566
160	106	-.136	.118	.254	-.485	160	156	-.163	.118	.262	-.538	160	219	-.108	.124	.300	-.529
160	107	-.126	.123	.257	-.561	160	157	-.171	.123	.223	-.613	160	220	-.242	.303	.672	-1.302
160	108	-.114	.116	.250	-.499	160	158	-.178	.114	.172	-.582	160	221	-.232	.317	.686	-1.392
160	109	-.128	.117	.273	-.563	160	159	-.181	.115	.266	-.572	160	222	-.056	.258	.679	-1.329
160	110	-.130	.118	.298	-.531	160	160	-.178	.114	.171	-.620	160	223	.010	.150	.631	-.811
160	111	-.150	.127	.337	-.623	160	161	-.186	.119	.155	-.678	160	224	.003	.121	.513	-.586
160	112	-.150	.124	.225	-.728	160	162	-.179	.121	.278	-.832	160	225	-.024	.119	.390	-.384
160	113	-.159	.123	.328	-.598	160	163	-.183	.122	.280	-.747	160	226	-.075	.111	.293	-.434
160	114	-.150	.108	.158	-.517	160	164	-.182	.133	.422	-.703	160	227	-.110	.120	.270	-.541
160	115	-.143	.116	.211	-.767	160	165	-.190	.121	.196	-.622	160	228	-.268	.250	.515	-1.256
160	116	-.138	.116	.213	-.967	160	166	-.185	.115	.296	-.715	160	229	-.255	.263	.429	-1.195
160	117	-.133	.109	.206	-.520	160	167	-.184	.127	.293	-.622	160	230	-.099	.236	.772	-1.179
160	118	-.120	.124	.385	-.496	160	168	-.184	.138	.309	-.780	160	231	-.014	.155	.534	-.920
160	119	-.125	.114	.272	-.519	160	169	-.177	.121	.228	-.566	160	232	-.019	.117	.393	-.441
160	120	-.136	.107	.252	-.526	160	170	-.187	.107	.151	-.534	160	233	-.054	.115	.367	-.439
160	121	-.138	.125	.275	-.499	160	171	-.195	.112	.172	-.737	160	234	-.094	.109	.333	-.464
160	122	-.147	.133	.277	-.646	160	172	-.227	.122	.134	-.655	160	235	-.119	.114	.293	-.589
160	123	-.138	.116	.240	-.650	160	173	-.228	.122	.163	-.669	160	236	-.301	.245	.352	-1.486
160	124	-.155	.110	.185	-.487	160	174	-.208	.111	.179	-.624	160	237	-.289	.253	.333	-1.386
160	125	-.147	.101	.225	-.464	160	175	-.194	.115	.170	-.591	160	238	-.131	.204	.497	-1.029
160	126	-.132	.110	.232	-.493	160	176	-.192	.109	.137	-.564	160	239	-.028	.131	.350	-.781
160	127	-.130	.116	.264	-.532	160	177	-.192	.107	.175	-.590	160	240	-.033	.109	.361	-.398
160	128	-.129	.119	.198	-.575	160	178	-.206	.112	.196	-.717	160	241	-.065	.122	.350	-.452
160	129	-.128	.115	.289	-.511	160	179	-.246	.121	.194	-.688	160	242	-.108	.129	.340	-.643
160	130	-.128	.104	.194	-.532	160	180	-.197	.127	.239	-.769	160	243	-.125	.118	.266	-.530
160	131	-.132	.110	.275	-.518	160	181	-.184	.119	.186	-.641	160	244	-.299	.205	.286	-1.379
160	132	-.144	.106	.176	-.532	160	182	-.189	.112	.168	-.641	160	245	-.281	.219	.281	-1.265
160	133	-.134	.117	.285	-.500	160	183	-.215	.119	.172	-.664	160	246	-.138	.152	.239	-.952
160	134	-.140	.114	.253	-.496	160	184	-.189	.108	.189	-.578	160	247	-.069	.123	.369	-.683
160	135	-.137	.114	.205	-.513	160	185	-.187	.123	.187	-.595	160	248	-.064	.110	.306	-.467
160	136	-.138	.115	.210	-.550	160	186	-.184	.106	.113	-.571	160	249	-.101	.100	.211	-.483
160	137	-.132	.115	.217	-.480	160	187	-.218	.117	.139	-.716	160	250	-.144	.114	.179	-.543
160	138	-.132	.105	.216	-.441	160	201	-.368	.212	.452	-1.115	160	251	-.171	.116	.210	-.609
160	139	-.127	.110	.196	-.649	160	202	-.250	.175	.307	-1.139	160	252	-.227	.211	.308	-1.743
160	140	-.124	.112	.230	-.557	160	203	-.178	.140	.270	-.977	160	253	-.197	.172	.263	-.975
160	141	-.131	.110	.196	-.504	160	204	-.297	.320	.776	-1.486	160	254	-.082	.123	.399	-.614
160	142	-.138	.107	.273	-.491	160	205	-.251	.292	.719	-1.277	160	255	-.056	.117	.357	-.488
160	143	-.144	.101	.187	-.509	160	206	-.074	.180	.540	-.957	160	256	-.083	.111	.338	-.461
160	144	-.146	.118	.216	-.622	160	207	-.022	.136	.563	-.521	160	257	-.131	.106	.226	-.503
160	145	-.159	.121	.224	-.554	160	208	-.016	.131	.431	-.513	160	258	-.165	.117	.165	-.592
160	146	-.137	.120	.269	-.582	160	209	-.019	.127	.451	-.427	160	259	-.179	.116	.180	-.578
160	147	-.140	.117	.273	-.547	160	210	-.056	.130	.379	-.563	160	260	-.171	.180	.258	-1.078
160	148	-.139	.113	.208	-.599	160	211	-.083	.121	.336	-.448	160	261	-.066	.121	.369	-.693
160	149	-.143	.117	.181	-.604	160	212	-.288	.356	.904	-1.624	160	262	-.081	.140	.313	-.688
160	150	-.138	.112	.221	-.523	160	213	-.206	.331	.758	-1.492	160	263	-.060	.118	.275	-.446
160	151	-.145	.115	.219	-.487	160	214	-.074	.245	.625	-1.210	160	264	-.085	.110	.294	-.519
160	152	-.148	.109	.253	-.466	160	215	.025	.141	.576	-.521	160	265	-.132	.108	.205	-.493
160	153	-.193	.109	.136	-.602	160	216	.019	.134	.547	-.359	160	266	-.118	.139	.346	-.786
160	154	-.168	.120	.190	-.550	160	217	-.016	.120	.508	-.355	160	267	-.113	.137	.422	-.645

WD	TAP	CPMEAN	CPRMS	CPMAX	CPMIN	WD	TAP	CPMEAN	CPRMS	CPMAX	CPMIN	WD	TAP	CPMEAN	CPRMS	CPMAX	CPMIN
160	268	-.049	.124	.356	-.455	160	346	.017	.175	.647	-1.248	160	438	-.003	.120	.475	-.407
160	269	-.040	.118	.369	-.496	160	347	.019	.135	.506	-.491	160	439	.070	.131	.528	-.325
160	270	-.080	.105	.298	-.436	160	348	-.068	.138	.424	-.513	160	440	.114	.134	.656	-.392
160	271	-.061	.106	.313	-.458	160	349	.092	.138	.703	-.344	160	441	.190	.166	.816	-.375
160	272	-.165	.114	.195	-.489	160	350	.089	.130	.719	-.312	160	442	.182	.188	.780	-.555
160	301	.139	.222	.963	-.547	160	351	.071	.141	.849	-.471	160	443	.181	.207	.956	-.572
160	302	.148	.214	1.321	-.472	160	352	.008	.145	.555	-.577	160	444	-.145	.111	.197	-.500
160	303	.161	.216	.920	-.792	160	353	.024	.128	.578	-.396	160	445	-.092	.114	.337	-.452
160	304	.111	.235	1.207	-1.282	160	354	-.007	.129	.606	-.533	160	446	-.018	.118	.444	-.467
160	305	.092	.199	.958	-.607	160	355	.136	.163	.930	-.419	160	447	.043	.123	.507	-.329
160	306	-.035	.204	.811	-.781	160	356	.132	.153	.871	-.339	160	448	.101	.122	.565	-.277
160	307	.199	.245	.999	-.451	160	357	.015	.118	.425	-.450	160	449	.135	.146	.827	-.285
160	308	.308	.263	1.278	-.452	160	358	.042	.134	.693	-.446	160	450	.135	.169	.802	-.580
160	309	.316	.254	1.184	-.605	160	401	-.196	.152	.274	-.874	160	451	.129	.175	.814	-.675
160	310	.225	.236	1.047	-.704	160	402	-.269	.231	.362	-1.494	160	452	-.182	.121	.238	-.716
160	311	.170	.207	1.186	-.525	160	403	-.354	.290	.748	-1.707	160	453	-.145	.115	.257	-.491
160	312	-.016	.256	1.072	-.889	160	404	-.106	.123	.354	-.567	160	454	-.087	.118	.420	-.519
160	313	.273	.271	1.200	-.573	160	405	-.066	.128	.396	-.593	160	455	.023	.113	.449	-.323
160	314	.345	.257	1.208	-.418	160	406	-.038	.131	.473	-.468	160	456	.097	.125	.572	-.268
160	315	.310	.248	1.327	-.718	160	407	-.029	.134	.586	-.492	160	457	.134	.139	.672	-.425
160	316	.211	.212	1.027	-.804	160	408	-.030	.144	.521	-.586	160	458	.113	.144	.618	-.438
160	317	.172	.192	1.195	-.393	160	409	-.042	.156	.477	-.719	160	459	.094	.162	.890	-.435
160	318	.018	.228	.889	-.854	160	410	-.071	.220	.654	-.908	160	460	-.070	.119	.351	-.557
160	319	.294	.270	1.320	-.667	160	411	-.111	.266	.697	-.965	160	461	.026	.121	.434	-.417
160	320	.368	.261	1.235	-.381	160	412	-.117	.106	.238	-.469	160	462	.101	.131	.529	-.309
160	321	.263	.228	1.081	-.527	160	413	-.062	.115	.337	-.478	160	463	.139	.135	.614	-.299
160	322	.143	.249	.867	-.993	160	414	.017	.136	.568	-.524	160	464	.121	.137	.628	-.353
160	323	.118	.186	.797	-.821	160	415	.076	.140	.521	-.338	160	465	.087	.130	.517	-.314
160	324	-.024	.226	.788	-.828	160	416	.110	.172	.795	-.481	160	466	.028	.119	.436	-.391
160	325	.304	.243	1.181	-.491	160	417	.146	.197	.911	-.653	160	467	.050	.118	.491	-.311
160	326	.339	.225	1.191	-.311	160	418	.079	.297	.900	-1.105	160	468	.111	.130	.491	-.337
160	327	.267	.226	1.111	-.515	160	419	.062	.292	.941	-1.098	160	469	.128	.138	.778	-.307
160	328	.099	.214	.775	-1.018	160	420	-.121	.116	.284	-.526	160	470	.181	.138	.847	-.290
160	329	.083	.164	.896	-.712	160	421	-.068	.124	.442	-.514	160	471	.132	.153	.816	-.334
160	330	-.099	.196	.756	-.673	160	422	.014	.126	.413	-.416	160	472	-.143	.107	.161	-.604
160	331	.245	.193	.950	-.240	160	423	.075	.145	.645	-.429	160	501	-.191	.125	.209	-.595
160	332	.310	.224	1.125	-.288	160	424	.135	.170	.819	-.373	160	502	-.181	.126	.187	-.615
160	333	.202	.200	1.023	-.337	160	425	.180	.208	.852	-.801	160	503	-.174	.122	.246	-.552
160	334	.071	.108	.541	-.313	160	426	.203	.273	.932	-1.053	160	504	-.172	.127	.251	-.611
160	335	.048	.158	.656	-.614	160	427	.131	.311	.980	-.973	160	505	-.189	.120	.211	-.622
160	336	-.106	.167	.435	-1.173	160	428	-.113	.104	.265	-.520	160	506	-.178	.115	.258	-.575
160	337	.203	.189	1.251	-.444	160	429	-.074	.114	.316	-.456	160	507	-.171	.106	.241	-.553
160	338	.233	.176	.853	-.221	160	430	.017	.128	.552	-.523	160	508	-.176	.114	.202	-.554
160	339	.179	.189	.979	-.439	160	431	.066	.133	.536	-.375	160	509	-.177	.112	.146	-.553
160	340	.035	.174	.709	-.995	160	432	.150	.154	.741	-.313	160	510	-.166	.112	.248	-.525
160	341	.009	.145	.607	-.534	160	433	.191	.194	.811	-.692	160	511	-.166	.122	.284	-.639
160	342	-.119	.143	.447	-.746	160	434	.164	.279	1.026	-1.055	160	512	-.167	.113	.265	-.541
160	343	.117	.149	.705	-.422	160	435	.185	.248	1.108	-.919	160	513	-.179	.105	.137	-.622
160	344	.128	.149	.727	-.312	160	436	-.119	.112	.289	-.550	160	514	-.167	.110	.280	-.454
160	345	.110	.158	.773	-.291	160	437	-.078	.121	.306	-.612	160	515	-.161	.109	.195	-.527

WD	TAP	CPMEAN	CPRMS	CPMAX	CPMIN	WD	TAP	CPMEAN	CPRMS	CPMAX	CPMIN	WD	TAP	CPMEAN	CPRMS	CPMAX	CPMIN
160	516	-.165	.115	.217	-.685	160	632	-.208	.114	.228	-.580	160	1112	-.208	.118	.174	-.727
160	517	-.178	.116	.199	-.585	160	633	-.202	.109	.180	-.611	160	1113	-.181	.120	.263	-.567
160	518	-.182	.110	.187	-.546	160	634	-.200	.116	.180	-.618	160	1114	-.165	.118	.208	-.599
160	519	-.161	.110	.277	-.582	160	801	-.010	.118	.370	-.440	160	1115	-.161	.122	.229	-.572
160	520	-.167	.116	.185	-.563	160	802	.047	.129	.629	-.387	160	1116	-.143	.114	.213	-.591
160	521	-.205	.115	.214	-.597	160	803	-.190	.111	.151	-.606	160	1117	-.182	.106	.148	-.559
160	522	-.214	.126	.161	-.864	160	804	-.191	.117	.208	-.727	160	1118	-.206	.129	.181	-.599
160	523	-.200	.117	.187	-.590	160	805	-.193	.110	.159	-.542	160	1119	-.204	.112	.110	-.782
160	524	-.210	.121	.232	-.608	160	806	-.202	.121	.251	-.601	160	1120	-.198	.119	.146	-.571
160	525	-.251	.124	.172	-.775	160	807	-.226	.128	.171	-.687	160	1121	-.192	.113	.103	-.637
160	526	-.250	.132	.121	-.896	160	808	-.216	.114	.135	-.628	160	1122	-.191	.120	.262	-.712
160	527	-.244	.124	.154	-.976	160	809	-.218	.110	.211	-.601	160	1123	-.183	.107	.155	-.543
160	528	-.253	.128	.213	-.806	160	810	-.213	.117	.178	-.642	160	1124	-.167	.117	.232	-.768
160	529	-.257	.126	.134	-.755	160	811	-.215	.117	.185	-.654	160	1125	-.125	.107	.235	-.458
160	530	-.286	.125	.167	-.778	160	812	-.238	.120	.197	-.751	160	1126	-.109	.114	.257	-.570
160	531	-.242	.122	.156	-.710	160	813	-.229	.120	.171	-.775	160	1201	-.216	.112	.096	-.602
160	532	-.232	.122	.222	-.707	160	814	-.281	.131	.190	-.756	160	1202	-.239	.120	.129	-.816
160	533	-.238	.130	.140	-.820	160	815	-.300	.142	.089	-.965	160	1203	-.194	.112	.171	-.715
160	534	-.224	.121	.205	-.691	160	901	-.355	.186	.165	-1.422	160	1204	-.227	.121	.136	-.776
160	601	-.163	.111	.272	-.545	160	902	-.361	.208	.254	-1.339	160	1205	-.213	.120	.126	-.833
160	602	-.172	.117	.186	-.580	160	903	-.177	.211	.443	-1.039	160	1206	-.211	.117	.133	-.881
160	603	-.176	.118	.205	-.634	160	904	-.236	.188	.358	-1.050	160	1207	-.262	.137	.155	-.714
160	604	-.187	.128	.200	-.611	160	905	-.239	.195	.318	-1.036	160	1208	-.182	.109	.134	-.505
160	605	-.179	.107	.224	-.599	160	906	-.108	.142	.296	-.814	160	1209	-.184	.116	.192	-.517
160	606	-.178	.115	.173	-.582	160	907	-.196	.192	.282	-1.394	160	1210	-.196	.121	.180	-.587
160	607	-.172	.118	.288	-.547	160	908	-.097	.132	.326	-.632	160	1211	-.205	.108	.099	-.585
160	608	-.184	.117	.165	-.635	160	909	-.156	.162	.314	-.706	160	1212	-.186	.123	.165	-.775
160	609	-.165	.108	.175	-.489	160	910	-.171	.124	.202	-.586	160	1213	-.200	.112	.109	-.532
160	610	-.180	.109	.156	-.546	160	911	-.169	.139	.286	-.860	160	1214	-.018	.128	.480	-.406
160	611	-.181	.118	.242	-.584	160	912	-.261	.184	.266	-.906	160	1215	-.183	.114	.163	-.506
160	612	-.179	.106	.158	-.596	160	913	-.051	.150	.390	-.726	160	1216	-.173	.106	.167	-.512
160	613	-.170	.104	.199	-.563	160	914	-.139	.137	.357	-.713	160	1217	-.183	.111	.127	-.655
160	614	-.165	.105	.203	-.585	160	915	-.129	.174	.339	-.869	160	1218	-.178	.116	.139	-.623
160	615	-.171	.111	.247	-.608	160	916	-.097	.128	.316	-.576	160	1219	-.192	.115	.257	-.587
160	616	-.179	.123	.279	-.694	160	917	-.101	.131	.344	-.829	160	1220	-.192	.108	.157	-.518
160	617	-.182	.119	.204	-.606	160	918	-.074	.126	.387	-.625	160	1221	-.172	.110	.209	-.540
160	618	-.186	.110	.192	-.639	160	919	-.144	.141	.286	-.643	160	1222	-.189	.111	.137	-.663
160	619	-.188	.110	.197	-.554	160	920	-.151	.138	.261	-.795	160	1223	-.173	.113	.209	-.492
160	620	-.192	.111	.227	-.582	160	921	-.112	.138	.328	-.568	160	1224	-.037	.163	.626	-.520
160	621	-.200	.127	.197	-.597	160	1101	-.225	.109	.120	-.870	160	1225	-.179	.112	.183	-.554
160	622	-.213	.107	.097	-.604	160	1102	-.231	.135	.178	-.698	160	1226	-.181	.110	.171	-.580
160	623	-.218	.113	.135	-.701	160	1103	-.223	.127	.138	-.757	160	1227	-.182	.110	.135	-.490
160	624	-.220	.108	.113	-.715	160	1104	-.210	.122	.201	-.772	160	1228	-.168	.119	.255	-.524
160	625	-.223	.122	.171	-.568	160	1105	-.223	.103	.106	-.587	160	1229	-.132	.118	.342	-.542
160	626	-.211	.124	.192	-.630	160	1106	-.230	.128	.160	-.615	160	1301	-.217	.120	.154	-.841
160	627	-.224	.113	.109	-.615	160	1107	-.187	.110	.148	-.632	160	1302	-.231	.119	.241	-.668
160	628	-.212	.115	.172	-.746	160	1108	-.175	.113	.186	-.617	160	1303	-.253	.134	.378	-.787
160	629	-.253	.129	.196	-.734	160	1109	-.158	.114	.266	-.577	160	1304	-.192	.112	.175	-.642
160	630	-.231	.122	.168	-.694	160	1110	-.160	.112	.176	-.645	160	1305	-.050	.121	.384	-.493
160	631	-.200	.116	.199	-.584	160	1111	-.184	.115	.224	-.885	160	1306	-.145	.106	.316	-.508

WD	TAP	CPMEAN	CPRMS	CPMAX	CPMIN
160	1307	-.181	.112	.143	-.692
160	1308	-.235	.131	.174	-.668
160	1309	-.201	.112	.184	-.657
160	1311	-.104	.147	.436	-.642
160	1312	-.129	.114	.245	-.685
160	1313	-.184	.111	.143	-.570
160	1314	-.193	.110	.148	-.585
160	1315	-.180	.108	.142	-.528
160	1316	-.181	.102	.150	-.518
160	1317	.045	.130	.487	-.357
160	1318	-.188	.117	.175	-.619
160	1319	-.154	.106	.193	-.489
160	1320	-.167	.122	.233	-.592
160	1321	-.209	.101	.150	-.678
160	1322	-.195	.105	.216	-.504
160	1323	-.179	.111	.176	-.638
160	1324	.137	.155	.872	-.350
160	1325	-.042	.129	.626	-.409
160	1326	-.082	.127	.474	-.561
160	1327	-.175	.125	.288	-.636
160	1328	-.192	.111	.171	-.673
160	1329	-.171	.117	.257	-.554
160	1330	-.080	.131	.392	-.548
160	1331	.012	.155	.884	-.414
160	1401	-.240	.124	.161	-.859
160	1402	-.211	.141	.134	-1.016
160	1403	-.213	.125	.134	-.766
160	1404	-.228	.123	.108	-.634
160	1405	-.201	.126	.175	-.741
160	1406	-.203	.131	.250	-.782
160	1407	-.197	.136	.184	-.674
160	1408	-.212	.127	.224	-.748
160	1409	-.209	.115	.162	-.607
160	1410	-.176	.113	.190	-.537
160	1411	-.197	.143	.234	-.954
160	1412	-.202	.135	.254	-.660
160	1413	-.223	.134	.202	-.672
160	1414	-.198	.115	.156	-.597
160	1415	-.187	.113	.174	-.613
160	1416	-.170	.145	.307	-.860
160	1417	-.199	.133	.180	-.692
160	1418	-.196	.143	.288	-.642
160	1419	-.156	.116	.203	-.584
160	1420	-.199	.145	.241	-.881
160	1421	-.178	.134	.291	-.719
160	1422	-.144	.127	.268	-.603
160	1423	-.146	.131	.272	-.738
160	1424	-.152	.135	.277	-.865
160	1425	-.158	.145	.299	-.818
160	1426	-.144	.145	.238	-.762
160	1427	-.138	.131	.347	-.587
160	1428	-.129	.132	.367	-.543
160	1429	-.117	.131	.329	-.575
160	1430	-.141	.140	.329	-.702
160	1431	-.165	.147	.409	-.714
160	1432	-.153	.138	.321	-.545
160	1433	-.191	.133	.188	-.619
160	1434	-.189	.137	.234	-.648
160	1435	-.163	.132	.242	-.824
160	1901	-.187	.123	.241	-.593
160	1902	-.036	.112	.278	-.581
160	1903	.074	.104	.404	-.313
160	1904	-.173	.129	.195	-.775
160	1905	-.118	.105	.163	-.531
160	1906	-.192	.112	.174	-.662
160	1907	-.190	.105	.165	-.588
160	1908	-.195	.108	.148	-.622
160	1909	-.175	.102	.136	-.525
160	1910	-.188	.108	.124	-.602
160	1911	-.161	.107	.255	-.518
160	1912	-.192	.110	.136	-.732
160	1913	-.201	.106	.147	-.596
160	1914	-.199	.114	.174	-.667
160	1915	-.167	.109	.232	-.787
160	1916	-.196	.111	.148	-.583
160	1917	-.196	.111	.186	-.506
160	1918	-.184	.111	.205	-.514
160	1919	-.192	.103	.203	-.611
160	1920	-.182	.108	.195	-.580
160	1921	-.242	.122	.113	-.686
160	1922	-.213	.123	.142	-.672
160	1923	-.192	.119	.189	-.959
160	1924	-.198	.104	.165	-.551
160	1925	-.211	.106	.168	-.583
160	1926	-.199	.105	.120	-.607
160	1927	-.214	.112	.146	-.698
160	1928	-.198	.111	.168	-.680
160	1929	-.187	.099	.085	-.578
160	1930	-.196	.110	.132	-.532
160	1931	-.183	.101	.182	-.526
160	1932	-.171	.097	.114	-.480
160	1933	-.207	.112	.104	-.716
160	1934	-.195	.114	.115	-.611
160	1935	-.190	.109	.143	-.578
160	1936	-.196	.108	.155	-.625
160	1937	-.190	.100	.142	-.531
160	1938	-.173	.106	.187	-.511
160	1939	-.183	.108	.203	-.550
160	1940	-.210	.120	.151	-.602
160	1941	-.204	.118	.168	-.606
160	1942	-.199	.116	.187	-.576
160	1943	-.204	.099	.155	-.637
160	1944	-.188	.097	.146	-.508
160	1945	-.217	.108	.127	-.695
160	1946	-.200	.111	.140	-.594
160	1947	-.182	.111	.185	-.594
160	1948	-.196	.106	.179	-.552
160	1949	-.202	.105	.189	-.571
160	1950	-.197	.104	.114	-.604
160	1951	-.238	.117	.112	-.745
160	1952	-.240	.127	.107	-.781
160	1953	-.208	.101	.086	-.594
160	1954	-.197	.109	.103	-.558
160	1955	-.184	.101	.159	-.549
160	1956	-.175	.105	.145	-.557
160	1957	-.189	.101	.103	-.575
160	1958	-.192	.110	.142	-.567
160	1959	-.178	.103	.137	-.490
160	1960	-.185	.106	.146	-.576
160	1961	-.181	.096	.153	-.536
160	1962	-.193	.124	.164	-.909
160	1963	-.189	.110	.218	-.690
160	1964	-.194	.112	.167	-.615
160	1965	-.205	.114	.187	-.526
160	1966	-.197	.114	.180	-.532
160	1967	-.202	.103	.171	-.627
160	1968	-.193	.110	.197	-.573
170	101	-.262	.178	.259	-1.107
170	102	-.202	.163	.313	-1.268
170	103	-.172	.142	.224	-1.079
170	104	-.128	.147	.372	-.809
170	105	-.108	.143	.348	-.735
170	106	-.115	.133	.378	-.655
170	107	-.110	.136	.319	-.544
170	108	-.109	.151	.413	-.576
170	109	-.125	.125	.317	-.581
170	110	-.127	.138	.304	-.600
170	111	-.145	.137	.363	-.755
170	112	-.139	.123	.272	-.574
170	113	-.139	.123	.282	-.750
170	114	-.128	.125	.245	-.657
170	115	-.113	.116	.278	-.602
170	116	-.119	.117	.283	-.539
170	117	-.112	.117	.283	-.505
170	118	-.107	.115	.306	-.515
170	119	-.104	.124	.252	-.661
170	120	-.106	.123	.320	-.535
170	121	-.125	.123	.382	-.511
170	122	-.125	.115	.252	-.540
170	123	-.129	.126	.291	-.679

WD	TAP	CPMEAN	CPRMS	CPMAX	CPMIN	WD	TAP	CPMEAN	CPRMS	CPMAX	CPMIN	WD	TAP	CPMEAN	CPRMS	CPMAX	CPMIN
170	124	-.124	.118	.254	-.526	170	174	-.185	.119	.180	-.607	170	237	-.354	.253	.348	-1.671
170	125	-.115	.119	.254	-.457	170	175	-.195	.114	.162	-.568	170	238	-.151	.191	.333	-1.121
170	126	-.119	.113	.275	-.511	170	176	-.185	.124	.237	-.589	170	239	-.054	.134	.348	-.852
170	127	-.106	.119	.297	-.542	170	177	-.171	.122	.217	-.569	170	240	-.050	.122	.387	-.501
170	128	-.114	.108	.359	-.481	170	178	-.195	.133	.196	-.700	170	241	-.078	.120	.357	-.499
170	129	-.108	.116	.381	-.522	170	179	-.250	.132	.123	-.842	170	242	-.102	.115	.303	-.492
170	130	-.117	.111	.245	-.466	170	180	-.169	.125	.247	-.589	170	243	-.124	.128	.290	-.525
170	131	-.115	.119	.271	-.537	170	181	-.182	.127	.229	-.569	170	244	-.242	.197	.381	-.977
170	132	-.125	.126	.234	-.584	170	182	-.180	.119	.244	-.584	170	245	-.223	.191	.456	-1.248
170	133	-.119	.117	.256	-.606	170	183	-.216	.133	.212	-.654	170	246	-.123	.140	.281	-.693
170	134	-.123	.116	.273	-.505	170	184	-.195	.130	.233	-.718	170	247	-.076	.120	.277	-.509
170	135	-.122	.119	.254	-.542	170	185	-.174	.123	.261	-.594	170	248	-.080	.115	.238	-.460
170	136	-.109	.118	.265	-.563	170	186	-.161	.111	.231	-.617	170	249	-.105	.104	.332	-.458
170	137	-.110	.110	.247	-.479	170	187	-.221	.133	.146	-.859	170	250	-.137	.129	.291	-.518
170	138	-.111	.120	.275	-.542	170	201	-.504	.210	.253	-1.518	170	251	-.155	.114	.254	-.554
170	139	-.110	.113	.316	-.468	170	202	-.278	.158	.154	-.960	170	252	-.152	.145	.254	-.948
170	140	-.120	.118	.286	-.578	170	203	-.194	.134	.189	-.865	170	253	-.131	.136	.371	-.706
170	141	-.115	.125	.291	-.576	170	204	-.582	.278	.406	-1.811	170	254	-.068	.124	.404	-.460
170	142	-.130	.126	.271	-.569	170	205	-.518	.250	.312	-1.518	170	255	-.063	.108	.352	-.493
170	143	-.136	.125	.258	-.556	170	206	-.215	.187	.359	-1.091	170	256	-.088	.111	.285	-.424
170	144	-.147	.126	.278	-.600	170	207	-.097	.141	.436	-.943	170	257	-.123	.116	.335	-.518
170	145	-.146	.118	.312	-.563	170	208	-.062	.125	.456	-.649	170	258	-.142	.115	.259	-.586
170	146	-.132	.108	.200	-.507	170	209	-.055	.122	.340	-.615	170	259	-.162	.124	.269	-.653
170	147	-.123	.124	.318	-.610	170	210	-.063	.119	.324	-.557	170	260	-.103	.145	.378	-.868
170	148	-.125	.133	.278	-.608	170	211	-.083	.119	.303	-.544	170	261	-.069	.123	.321	-.508
170	149	-.115	.121	.267	-.501	170	212	-.580	.269	.516	-1.611	170	262	-.072	.116	.316	-.421
170	150	-.128	.126	.243	-.580	170	213	-.514	.303	.380	-1.740	170	263	-.066	.120	.412	-.435
170	151	-.123	.128	.301	-.567	170	214	-.235	.214	.421	-1.264	170	264	-.086	.105	.226	-.448
170	152	-.131	.122	.295	-.559	170	215	-.076	.143	.368	-.589	170	265	-.143	.108	.274	-.555
170	153	-.154	.115	.280	-.631	170	216	-.046	.130	.477	-.552	170	266	-.085	.123	.387	-.501
170	154	-.165	.169	.372	-.733	170	217	-.052	.128	.404	-.454	170	267	-.073	.124	.364	-.617
170	155	-.161	.127	.232	-.619	170	218	-.078	.119	.479	-.505	170	268	-.051	.120	.367	-.442
170	156	-.153	.135	.241	-.733	170	219	-.109	.117	.320	-.581	170	269	-.051	.118	.334	-.462
170	157	-.159	.126	.247	-.683	170	220	-.543	.267	.590	-1.934	170	270	-.080	.117	.355	-.472
170	158	-.150	.120	.305	-.619	170	221	-.491	.281	.372	-1.805	170	271	-.081	.108	.360	-.499
170	159	-.144	.118	.273	-.526	170	222	-.262	.271	.454	-1.595	170	272	-.150	.112	.194	-.545
170	160	-.154	.122	.284	-.625	170	223	-.078	.146	.339	-.807	170	301	.163	.227	.971	-.549
170	161	-.146	.115	.209	-.647	170	224	-.054	.139	.443	-.589	170	302	.213	.228	.986	-.590
170	162	-.164	.130	.327	-.628	170	225	-.056	.122	.423	-.721	170	303	.186	.231	1.124	-.652
170	163	-.159	.136	.239	-.787	170	226	-.088	.119	.299	-.501	170	304	.043	.246	1.210	-1.177
170	164	-.179	.135	.280	-.716	170	227	-.105	.130	.324	-.538	170	305	.011	.185	.605	-.792
170	165	-.163	.140	.262	-.757	170	228	-.503	.291	.329	-1.822	170	306	-.145	.165	.454	-.877
170	166	-.162	.134	.316	-.681	170	229	-.485	.253	.273	-1.990	170	307	.277	.225	.978	-.455
170	167	-.182	.132	.271	-.735	170	230	-.228	.246	.387	-1.270	170	308	.423	.254	1.375	-.564
170	168	-.170	.125	.252	-.606	170	231	-.086	.139	.393	-.760	170	309	.338	.285	1.356	-.564
170	169	-.178	.137	.260	-.675	170	232	-.052	.116	.406	-.673	170	310	.158	.260	1.170	-1.039
170	170	-.160	.129	.234	-.619	170	233	-.071	.110	.331	-.454	170	311	.107	.213	1.032	-.700
170	171	-.166	.127	.200	-.599	170	234	-.099	.119	.262	-.538	170	312	-.186	.172	.511	-.809
170	172	-.214	.124	.150	-.764	170	235	-.103	.108	.238	-.617	170	313	.347	.256	1.302	-.397
170	173	-.220	.121	.226	-.845	170	236	-.414	.250	.214	-1.466	170	314	.410	.265	1.257	-.387

WD	TAP	CPMEAN	CPRMS	CPMAX	CPMIN	WD	TAP	CPMEAN	CPRMS	CPMAX	CPMIN	WD	TAP	CPMEAN	CPRMS	CPMAX	CPMIN
170	315	.342	.269	1.166	-.379	170	407	-.037	.132	.464	-.468	170	457	.027	.116	.377	-.389
170	316	.163	.250	.892	-.809	170	408	-.038	.152	.566	-.561	170	458	.008	.124	.406	-.527
170	317	.090	.210	.889	-.700	170	409	-.050	.160	.621	-.581	170	459	.009	.133	.441	-.478
170	318	-.184	.199	.557	-1.031	170	410	-.018	.201	1.041	-.993	170	460	-.088	.120	.291	-.472
170	319	.374	.243	1.304	-.307	170	411	-.071	.263	.996	-1.325	170	461	-.019	.117	.385	-.453
170	320	.415	.256	1.415	-.312	170	412	-.081	.114	.334	-.526	170	462	.030	.121	.502	-.396
170	321	.306	.272	1.289	-.424	170	413	-.046	.115	.460	-.411	170	463	.041	.132	.548	-.378
170	322	.114	.267	1.034	-1.294	170	414	.016	.133	.537	-.386	170	464	.027	.129	.449	-.437
170	323	.070	.210	.830	-.574	170	415	.060	.130	.609	-.364	170	465	.009	.118	.408	-.645
170	324	-.175	.177	.563	-.834	170	416	.110	.145	.623	-.388	170	466	-.017	.116	.427	-.383
170	325	.274	.201	1.017	-.307	170	417	.153	.174	.840	-.305	170	467	-.000	.124	.463	-.403
170	326	.352	.252	1.193	-.372	170	418	.195	.224	.950	-.710	170	468	.037	.122	.451	-.353
170	327	.297	.259	1.286	-.406	170	419	.113	.242	.969	-.942	170	469	.039	.126	.463	-.387
170	328	.093	.272	1.066	-1.162	170	420	-.107	.111	.286	-.467	170	470	.043	.127	.550	-.476
170	329	.043	.199	.736	-.767	170	421	-.059	.125	.456	-.455	170	471	.038	.146	.708	-.766
170	330	-.195	.173	.392	-.804	170	422	.006	.125	.522	-.460	170	472	-.124	.108	.252	-.459
170	331	.172	.185	.879	-.666	170	423	.060	.133	.540	-.350	170	501	-.166	.129	.253	-.717
170	332	.211	.215	1.005	-.300	170	424	.127	.140	.745	-.362	170	502	-.170	.117	.202	-.630
170	333	.154	.208	.983	-.527	170	425	.154	.162	.792	-.435	170	503	-.165	.117	.193	-.604
170	334	.035	.150	.539	-.515	170	426	.215	.219	.844	-.926	170	504	-.150	.117	.238	-.606
170	335	-.004	.194	.678	-.755	170	427	.184	.248	.999	-.732	170	505	-.176	.129	.249	-.557
170	336	-.156	.169	.446	-.750	170	428	-.112	.116	.308	-.484	170	506	-.164	.120	.273	-.536
170	337	.081	.167	.728	-.481	170	429	-.073	.120	.333	-.474	170	507	-.155	.123	.310	-.613
170	338	.096	.156	.787	-.334	170	430	-.012	.117	.368	-.414	170	508	-.155	.122	.258	-.556
170	339	.066	.179	.891	-.465	170	431	.048	.126	.593	-.355	170	509	-.163	.112	.212	-.636
170	340	-.020	.179	.577	-1.054	170	432	.103	.136	.529	-.345	170	510	-.153	.114	.226	-.594
170	341	-.036	.166	.655	-.734	170	433	.150	.157	.753	-.339	170	511	-.149	.113	.231	-.704
170	342	-.109	.141	.451	-.607	170	434	.177	.194	.820	-.570	170	512	-.152	.116	.192	-.655
170	343	.014	.118	.419	-.441	170	435	.149	.207	.947	-.895	170	513	-.161	.116	.219	-.526
170	344	.030	.115	.548	-.444	170	436	-.115	.119	.238	-.504	170	514	-.160	.131	.283	-.697
170	345	.011	.130	.505	-.482	170	437	-.082	.116	.309	-.436	170	515	-.150	.117	.229	-.504
170	346	-.006	.154	.576	-.745	170	438	-.026	.113	.368	-.394	170	516	-.148	.115	.243	-.502
170	347	-.023	.142	.524	-.450	170	439	.010	.126	.527	-.387	170	517	-.171	.115	.197	-.754
170	348	-.067	.126	.367	-.570	170	440	.051	.133	.588	-.431	170	518	-.178	.117	.182	-.652
170	349	.024	.133	.546	-.465	170	441	.082	.143	.632	-.371	170	519	-.155	.114	.226	-.514
170	350	.019	.129	.579	-.352	170	442	.087	.178	.716	-.823	170	520	-.143	.114	.209	-.529
170	351	.010	.117	.527	-.353	170	443	.030	.196	.733	-.715	170	521	-.202	.130	.236	-.769
170	352	-.030	.128	.433	-.410	170	444	-.132	.116	.298	-.546	170	522	-.202	.123	.160	-.705
170	353	-.013	.123	.419	-.451	170	445	-.092	.115	.266	-.578	170	523	-.186	.124	.216	-.655
170	354	-.030	.120	.353	-.389	170	446	-.041	.114	.335	-.403	170	524	-.191	.131	.239	-.698
170	355	.027	.150	.639	-.540	170	447	.006	.116	.488	-.364	170	525	-.244	.151	.196	-.940
170	356	.029	.141	.618	-.444	170	448	.026	.118	.394	-.398	170	526	-.246	.145	.161	-.997
170	357	-.003	.138	.625	-.470	170	449	.043	.134	.685	-.389	170	527	-.225	.142	.186	-.760
170	358	.007	.131	.664	-.419	170	450	.022	.144	.455	-.924	170	528	-.236	.135	.168	-.867
170	401	-.196	.154	.316	-.828	170	451	.008	.161	.471	-.776	170	529	-.269	.139	.138	-.865
170	402	-.308	.229	.355	-1.633	170	452	-.160	.125	.226	-.642	170	530	-.255	.145	.186	-.801
170	403	-.431	.373	.606	-1.683	170	453	-.127	.121	.249	-.668	170	531	-.217	.112	.136	-.643
170	404	-.086	.130	.692	-.624	170	454	-.096	.115	.273	-.573	170	532	-.216	.135	.175	-.751
170	405	-.057	.125	.530	-.801	170	455	-.011	.109	.411	-.378	170	533	-.234	.159	.246	-.904
170	406	-.032	.139	.535	-.475	170	456	.030	.112	.399	-.502	170	534	-.216	.141	.287	-.774

WD	TAP	CPMEAN	CPRMS	CPMAX	CPMIN	WD	TAP	CPMEAN	CPRMS	CPMAX	CPMIN	WD	TAP	CPMEAN	CPRMS	CPMAX	CPMIN
170	601	-.146	.118	.250	-.614	170	902	-.518	.236	.211	-1.468	170	1205	-.222	.154	.247	-1.033
170	602	-.152	.125	.273	-.586	170	903	-.266	.232	.435	-1.246	170	1206	-.233	.156	.180	-.849
170	603	-.166	.119	.260	-.568	170	904	-.251	.188	.493	-1.192	170	1207	-.231	.150	.255	-.791
170	604	-.159	.128	.294	-.618	170	905	-.297	.216	.461	-1.168	170	1208	-.139	.123	.212	-.548
170	605	-.155	.124	.216	-.581	170	906	-.137	.147	.326	-.946	170	1209	-.151	.119	.225	-.659
170	606	-.152	.120	.283	-.588	170	907	-.319	.215	.254	-1.474	170	1210	-.151	.105	.159	-.527
170	607	-.160	.127	.275	-.634	170	908	-.127	.141	.282	-1.077	170	1211	-.297	.104	.070	-.547
170	608	-.160	.118	.224	-.645	170	909	-.098	.162	.439	-.790	170	1212	-.195	.115	.140	-.609
170	609	-.144	.105	.249	-.497	170	910	-.170	.134	.220	-.729	170	1213	-.187	.116	.135	-.584
170	610	-.135	.113	.242	-.543	170	911	-.172	.144	.246	-1.029	170	1214	-.031	.120	.353	-.500
170	611	-.162	.108	.173	-.596	170	912	-.259	.172	.293	-.970	170	1215	-.167	.112	.177	-.585
170	612	-.150	.114	.200	-.534	170	913	-.009	.142	.446	-.603	170	1216	-.152	.114	.189	-.571
170	613	-.146	.119	.237	-.545	170	914	-.153	.140	.396	-.607	170	1217	-.150	.100	.175	-.482
170	614	-.151	.117	.223	-.603	170	915	-.171	.181	.343	-.979	170	1218	-.146	.102	.173	-.513
170	615	-.167	.110	.187	-.537	170	916	-.045	.139	.489	-.563	170	1219	-.156	.110	.122	-.613
170	616	-.145	.121	.244	-.522	170	917	-.050	.138	.357	-.563	170	1220	-.161	.104	.142	-.531
170	617	-.165	.127	.230	-.575	170	918	-.017	.155	.482	-.727	170	1221	-.159	.113	.204	-.685
170	618	-.181	.119	.212	-.539	170	919	-.153	.144	.304	-.713	170	1222	-.152	.117	.276	-.645
170	619	-.177	.129	.219	-.624	170	920	-.154	.139	.300	-.872	170	1223	-.136	.110	.252	-.594
170	620	-.192	.132	.216	-.663	170	921	-.133	.134	.296	-.779	170	1224	.003	.128	.494	-.529
170	621	-.186	.128	.196	-.808	170	1101	-.223	.126	.204	-.865	170	1225	-.157	.111	.169	-.560
170	622	-.198	.124	.194	-.672	170	1102	-.199	.130	.239	-.645	170	1226	-.154	.109	.155	-.558
170	623	-.212	.141	.175	-.985	170	1103	-.224	.148	.146	-.833	170	1227	-.150	.116	.131	-.663
170	624	-.219	.145	.217	-1.114	170	1104	-.182	.125	.199	-.616	170	1228	-.109	.130	.342	-.553
170	625	-.219	.145	.162	-1.131	170	1105	-.188	.125	.232	-.642	170	1229	-.094	.119	.251	-.576
170	626	-.216	.142	.230	-.847	170	1106	-.196	.125	.175	-.588	170	1301	-.229	.149	.176	-1.095
170	627	-.239	.149	.164	-.896	170	1107	-.159	.109	.181	-.603	170	1302	-.172	.154	.334	-.769
170	628	-.209	.131	.161	-.712	170	1108	-.132	.114	.227	-.519	170	1303	-.144	.171	.443	-.769
170	629	-.235	.138	.168	-.818	170	1109	-.149	.123	.247	-.747	170	1304	-.170	.110	.161	-.588
170	630	-.220	.138	.182	-.764	170	1110	-.147	.111	.222	-.548	170	1305	-.047	.113	.320	-.435
170	631	-.185	.129	.251	-.628	170	1111	-.166	.113	.170	-.537	170	1306	-.119	.109	.275	-.501
170	632	-.190	.135	.219	-.725	170	1112	-.180	.120	.178	-.639	170	1307	-.161	.110	.197	-.549
170	633	-.194	.131	.168	-.681	170	1113	-.126	.115	.256	-.543	170	1308	-.196	.122	.204	-.659
170	634	-.200	.129	.193	-.682	170	1114	-.106	.110	.199	-.524	170	1309	-.184	.115	.210	-.599
170	801	-.026	.115	.343	-.407	170	1115	-.140	.120	.201	-.587	170	1311	-.070	.123	.374	-.619
170	802	-.007	.129	.465	-.400	170	1116	-.092	.103	.245	-.504	170	1312	-.104	.112	.267	-.458
170	803	-.192	.118	.240	-.640	170	1117	-.157	.120	.255	-.621	170	1313	-.148	.113	.205	-.586
170	804	-.196	.124	.247	-.735	170	1118	-.169	.123	.196	-.558	170	1314	-.149	.123	.249	-.596
170	805	-.192	.132	.191	-.666	170	1119	-.169	.125	.235	-.743	170	1315	-.154	.110	.161	-.527
170	806	-.182	.129	.226	-.665	170	1120	-.138	.113	.284	-.548	170	1316	-.166	.115	.226	-.542
170	807	-.223	.157	.237	-.953	170	1121	-.186	.114	.178	-.633	170	1317	-.005	.107	.343	-.404
170	808	-.212	.129	.125	-1.078	170	1122	-.164	.119	.208	-.589	170	1318	-.171	.113	.183	-.757
170	809	-.191	.131	.154	-.810	170	1123	-.142	.122	.315	-1.033	170	1319	-.113	.110	.260	-.596
170	810	-.191	.115	.173	-.615	170	1124	-.107	.114	.238	-.578	170	1320	-.091	.122	.306	-.511
170	811	-.207	.139	.223	-.705	170	1125	-.080	.108	.303	-.488	170	1321	-.169	.119	.246	-.533
170	812	-.217	.134	.163	-.769	170	1126	-.064	.119	.297	-.542	170	1322	-.176	.124	.162	-.642
170	813	-.230	.128	.150	-.843	170	1201	-.233	.136	.124	-.763	170	1323	-.157	.107	.192	-.592
170	814	-.260	.153	.251	-1.062	170	1202	-.250	.155	.126	-.865	170	1324	.082	.140	.631	-.318
170	815	-.285	.167	.217	-1.193	170	1203	-.210	.144	.162	-.708	170	1325	-.001	.125	.609	-.421
170	901	-.440	.205	.280	-1.453	170	1204	-.209	.131	.152	-.735	170	1326	-.040	.120	.352	-.399

WD	TAP	CPMEAN	CPRMS	CPMAX	CPMIN	WD	TAP	CPMEAN	CPRMS	CPMAX	CPMIN	WD	TAP	CPMEAN	CPRMS	CPMAX	CPMIN
170	1327	-.098	.136	.551	-.529	170	1911	-.130	.104	.200	-.546	170	1961	-.171	.111	.218	-.648
170	1328	-.183	.114	.201	-.569	170	1912	-.153	.111	.168	-.531	170	1962	-.159	.121	.204	-.870
170	1329	-.153	.116	.239	-.592	170	1913	-.181	.131	.208	-.817	170	1963	-.167	.110	.178	-.564
170	1330	-.091	.125	.376	-.489	170	1914	-.178	.114	.124	-.662	170	1964	-.165	.113	.145	-.613
170	1331	-.048	.131	.576	-.466	170	1915	-.147	.109	.208	-.563	170	1965	-.191	.127	.144	-.666
170	1401	-.219	.144	.273	-.886	170	1916	-.195	.125	.130	-.744	170	1966	-.186	.119	.191	-.580
170	1402	-.242	.142	.141	-1.098	170	1917	-.194	.127	.140	-.655	170	1967	-.184	.123	.173	-.601
170	1403	-.218	.137	.165	-.858	170	1918	-.184	.120	.168	-.617	170	1968	-.169	.105	.215	-.527
170	1404	-.208	.133	.176	-.836	170	1919	-.189	.126	.180	-.668	180	101	-.119	.131	.358	-1.011
170	1405	-.191	.128	.159	-.802	170	1920	-.167	.107	.237	-.520	180	102	-.103	.113	.342	-.534
170	1406	-.198	.128	.158	-.793	170	1921	-.235	.154	.143	-.939	180	103	-.135	.143	.416	-.789
170	1407	-.179	.126	.170	-.856	170	1922	-.243	.157	.147	-1.044	180	104	-.069	.120	.327	-.488
170	1408	-.184	.127	.136	-.755	170	1923	-.215	.133	.172	-.907	180	105	-.058	.117	.299	-.701
170	1409	-.180	.117	.143	-.650	170	1924	-.190	.123	.255	-.575	180	106	-.066	.112	.292	-.567
170	1410	-.129	.116	.275	-.531	170	1925	-.197	.112	.149	-.772	180	107	-.065	.116	.327	-.555
170	1411	-.168	.141	.264	-.829	170	1926	-.188	.113	.166	-.660	180	108	-.061	.116	.320	-.434
170	1412	-.185	.133	.179	-.859	170	1927	-.202	.124	.157	-.723	180	109	-.075	.120	.304	-.546
170	1413	-.201	.124	.210	-.776	170	1928	-.204	.134	.222	-.769	180	110	-.074	.112	.279	-.446
170	1414	-.167	.123	.178	-.764	170	1929	-.179	.122	.195	-.652	180	111	-.070	.115	.376	-.588
170	1415	-.153	.117	.160	-.599	170	1930	-.173	.117	.211	-.758	180	112	-.073	.125	.386	-.495
170	1416	-.169	.136	.243	-.812	170	1931	-.161	.106	.216	-.525	180	113	-.078	.122	.328	-.507
170	1417	-.164	.137	.178	-.726	170	1932	-.161	.098	.193	-.460	180	114	-.070	.116	.372	-.509
170	1418	-.184	.139	.289	-.657	170	1933	-.191	.133	.263	-.818	180	115	-.064	.114	.327	-.521
170	1419	-.173	.133	.231	-.693	170	1934	-.181	.113	.270	-.585	180	116	-.063	.121	.283	-.747
170	1420	-.191	.145	.327	-.805	170	1935	-.188	.116	.219	-.598	180	117	-.067	.120	.302	-.474
170	1421	-.204	.149	.200	-1.311	170	1936	-.186	.120	.149	-.655	180	118	-.065	.113	.286	-.521
170	1422	-.111	.128	.321	-.667	170	1937	-.188	.117	.222	-.676	180	119	-.064	.110	.279	-.472
170	1423	-.107	.128	.305	-.550	170	1938	-.169	.115	.245	-.655	180	120	-.064	.116	.372	-.404
170	1424	-.126	.127	.365	-.645	170	1939	-.173	.107	.170	-.574	180	121	-.069	.112	.299	-.465
170	1425	-.172	.126	.219	-.758	170	1940	-.186	.125	.123	-.762	180	122	-.061	.113	.339	-.430
170	1426	-.157	.119	.190	-.800	170	1941	-.181	.131	.179	-.720	180	123	-.077	.113	.376	-.476
170	1427	-.068	.114	.276	-.507	170	1942	-.187	.121	.179	-.660	180	124	-.079	.107	.342	-.422
170	1428	-.091	.113	.250	-.543	170	1943	-.190	.119	.174	-.621	180	125	-.074	.107	.267	-.388
170	1429	-.082	.117	.312	-.514	170	1944	-.171	.095	.167	-.501	180	126	-.066	.106	.284	-.414
170	1430	-.110	.128	.303	-.601	170	1945	-.208	.128	.177	-.715	180	127	-.070	.112	.284	-.451
170	1431	-.152	.130	.196	-.730	170	1946	-.201	.124	.123	-.905	180	128	-.061	.111	.303	-.483
170	1432	-.160	.127	.296	-.705	170	1947	-.187	.115	.169	-.697	180	129	-.055	.110	.264	-.456
170	1433	-.163	.129	.229	-.945	170	1948	-.179	.122	.302	-.561	180	130	-.061	.104	.305	-.394
170	1434	-.200	.132	.216	-.721	170	1949	-.181	.107	.183	-.606	180	131	-.067	.106	.305	-.438
170	1435	-.185	.138	.163	-.998	170	1950	-.179	.111	.170	-.660	180	132	-.067	.112	.340	-.401
170	1901	-.117	.101	.191	-.464	170	1951	-.214	.127	.174	-.744	180	133	-.069	.110	.323	-.479
170	1902	.010	.103	.342	-.396	170	1952	-.229	.142	.213	-.971	180	134	-.079	.115	.347	-.488
170	1903	.114	.102	.385	-.360	170	1953	-.194	.123	.168	-.792	180	135	-.076	.106	.296	-.449
170	1904	-.146	.132	.277	-.639	170	1954	-.169	.113	.205	-.566	180	136	-.073	.110	.346	-.470
170	1905	-.089	.117	.284	-.828	170	1955	-.162	.104	.178	-.554	180	137	-.070	.116	.346	-.522
170	1906	-.144	.114	.260	-.531	170	1956	-.166	.104	.178	-.493	180	138	-.067	.117	.330	-.440
170	1907	-.185	.117	.205	-.684	170	1957	-.186	.126	.208	-.731	180	139	-.066	.109	.333	-.430
170	1908	-.197	.115	.176	-.726	170	1958	-.184	.104	.127	-.550	180	140	-.067	.113	.349	-.490
170	1909	-.177	.121	.192	-.665	170	1959	-.177	.109	.197	-.543	180	141	-.073	.107	.268	-.424
170	1910	-.191	.108	.130	-.584	170	1960	-.168	.113	.157	-.592	180	142	-.070	.102	.248	-.431

WD	TAP	CPMEAN	CPRMS	CPMAX	CPMIN	WD	TAP	CPMEAN	CPRMS	CPMAX	CPMIN	WD	TAP	CPMEAN	CPRMS	CPMAX	CPMIN
180	143	-.071	.109	.232	-.460	180	206	-.151	.133	.241	-.735	180	256	-.070	.104	.263	-.403
180	144	-.080	.108	.312	-.573	180	207	-.097	.123	.493	-.591	180	257	-.065	.109	.315	-.458
180	145	-.073	.108	.310	-.469	180	208	-.078	.124	.294	-.653	180	258	-.071	.109	.292	-.538
180	146	-.067	.104	.301	-.417	180	209	-.071	.124	.375	-.579	180	259	-.079	.111	.269	-.489
180	147	-.070	.103	.342	-.453	180	210	-.070	.113	.292	-.691	180	260	-.105	.101	.254	-.583
180	148	-.062	.099	.259	-.384	180	211	-.075	.122	.337	-.577	180	261	-.076	.105	.297	-.397
180	149	-.065	.111	.323	-.408	180	212	-.316	.201	.222	-1.346	180	262	-.082	.099	.222	-.400
180	150	-.067	.114	.330	-.428	180	213	-.294	.213	.317	-1.360	180	263	-.078	.107	.278	-.414
180	151	-.066	.108	.305	-.430	180	214	-.188	.142	.221	-.836	180	264	-.063	.114	.299	-.465
180	152	-.074	.100	.255	-.412	180	215	-.192	.120	.266	-.698	180	265	-.075	.100	.256	-.463
180	153	-.104	.107	.320	-.428	180	216	-.065	.111	.278	-.556	180	266	-.087	.110	.232	-.455
180	154	-.076	.119	.269	-.516	180	217	-.059	.113	.314	-.446	180	267	-.075	.104	.256	-.441
180	155	-.077	.114	.317	-.534	180	218	-.059	.108	.365	-.489	180	268	-.077	.097	.206	-.373
180	156	-.071	.106	.255	-.417	180	219	-.068	.110	.310	-.480	180	269	-.072	.101	.258	-.456
180	157	-.065	.110	.277	-.442	180	220	-.293	.219	.166	-1.601	180	270	-.065	.111	.254	-.424
180	158	-.062	.114	.347	-.458	180	221	-.289	.204	.419	-1.234	180	271	-.065	.104	.307	-.477
180	159	-.067	.112	.337	-.438	180	222	-.150	.132	.224	-.788	180	272	-.070	.107	.353	-.499
180	160	-.064	.112	.400	-.401	180	223	-.097	.126	.312	-.587	180	301	.057	.193	.974	-.772
180	161	-.070	.114	.333	-.462	180	224	-.070	.117	.291	-.490	180	302	.030	.174	.884	-.501
180	162	-.086	.119	.305	-.486	180	225	-.057	.110	.284	-.383	180	303	.006	.186	.755	-.506
180	163	-.096	.122	.269	-.546	180	226	-.064	.100	.294	-.363	180	304	-.143	.245	.697	-1.509
180	164	-.083	.114	.294	-.442	180	227	-.068	.112	.275	-.517	180	305	-.101	.146	.421	-.759
180	165	-.074	.111	.245	-.462	180	228	-.251	.217	.225	-1.333	180	306	-.154	.141	.383	-.731
180	166	-.073	.119	.356	-.486	180	229	-.234	.175	.289	-1.236	180	307	.072	.173	.840	-.727
180	167	-.073	.116	.305	-.516	180	230	-.134	.141	.278	-.938	180	308	.098	.191	.924	-.507
180	168	-.060	.110	.312	-.431	180	231	-.082	.119	.335	-.524	180	309	.034	.224	.864	-.591
180	169	-.075	.107	.342	-.415	180	232	-.063	.119	.382	-.490	180	310	-.107	.280	.971	-1.309
180	170	-.078	.107	.324	-.446	180	233	-.061	.116	.358	-.448	180	311	-.085	.182	.553	-.969
180	171	-.077	.109	.303	-.417	180	234	-.062	.114	.402	-.443	180	312	-.188	.146	.313	-.844
180	172	-.105	.106	.205	-.444	180	235	-.067	.116	.254	-.510	180	313	.092	.206	1.024	-.906
180	173	-.109	.116	.281	-.550	180	236	-.180	.164	.278	-1.187	180	314	.087	.190	.971	-.731
180	174	-.094	.103	.287	-.482	180	237	-.162	.157	.268	-.951	180	315	.035	.235	.841	-.821
180	175	-.080	.108	.276	-.412	180	238	-.108	.131	.347	-.765	180	316	-.076	.250	.814	-.909
180	176	-.081	.102	.305	-.393	180	239	-.078	.115	.337	-.473	180	317	-.096	.200	.587	-1.137
180	177	-.078	.106	.252	-.431	180	240	-.058	.115	.361	-.429	180	318	-.178	.139	.326	-.778
180	178	-.092	.103	.225	-.502	180	241	-.057	.112	.280	-.483	180	319	.028	.177	.773	-.719
180	179	-.115	.107	.242	-.453	180	242	-.054	.113	.291	-.402	180	320	.046	.194	1.071	-.672
180	180	-.084	.112	.244	-.509	180	243	-.074	.110	.342	-.487	180	321	-.004	.202	.953	-.543
180	181	-.073	.105	.302	-.388	180	244	-.121	.127	.310	-.640	180	322	-.112	.248	.919	-1.186
180	182	-.078	.102	.244	-.502	180	245	-.114	.122	.300	-.594	180	323	-.096	.194	.600	-.987
180	183	-.109	.102	.234	-.499	180	246	-.105	.114	.338	-.557	180	324	-.176	.135	.323	-.750
180	184	-.078	.106	.324	-.492	180	247	-.085	.110	.273	-.480	180	325	.005	.157	.679	-.565
180	185	-.078	.103	.271	-.422	180	248	-.070	.100	.328	-.420	180	326	.039	.170	.793	-.502
180	186	-.067	.098	.244	-.455	180	249	-.070	.107	.254	-.436	180	327	.006	.203	.935	-.547
180	187	-.104	.110	.208	-.554	180	250	-.079	.107	.278	-.475	180	328	-.112	.196	.704	-.727
180	201	-.268	.159	.181	-.832	180	251	-.086	.116	.258	-.491	180	329	-.095	.173	.655	-.836
180	202	-.185	.130	.253	-.688	180	252	-.112	.109	.302	-.508	180	330	-.158	.135	.431	-.616
180	203	-.099	.124	.289	-.670	180	253	-.119	.119	.261	-.608	180	331	-.032	.136	.441	-.567
180	204	-.307	.207	.194	-1.469	180	254	-.092	.104	.260	-.429	180	332	-.009	.131	.606	-.342
180	205	-.264	.169	.187	-1.185	180	255	-.079	.109	.250	-.471	180	333	-.066	.152	.692	-.710

WD	TAP	CPMEAN	CPRMS	CPMAX	CPMIN	WD	TAP	CPMEAN	CPRMS	CPMAX	CPMIN	WD	TAP	CPMEAN	CPRMS	CPMAX	CPMIN
180	334	-.125	.115	.302	-.540	180	426	.063	.138	.796	-.475	180	504	-.107	.114	.325	-.526
180	335	-.111	.138	.574	-.523	180	427	.043	.154	.636	-1.204	180	505	-.114	.110	.283	-.554
180	336	-.126	.129	.331	-.791	180	428	-.055	.109	.308	-.405	180	506	-.120	.115	.255	-.716
180	337	-.041	.118	.324	-.592	180	429	-.038	.107	.308	-.410	180	507	-.102	.110	.304	-.528
180	338	-.037	.113	.394	-.418	180	430	-.004	.111	.369	-.423	180	508	-.101	.106	.307	-.464
180	339	-.071	.120	.457	-.434	180	431	.024	.115	.463	-.396	180	509	-.112	.113	.219	-.537
180	340	-.118	.128	.320	-.601	180	432	.028	.115	.476	-.339	180	510	-.105	.112	.245	-.510
180	341	-.111	.124	.328	-.572	180	433	.050	.120	.509	-.328	180	511	-.098	.106	.364	-.422
180	342	-.116	.119	.263	-.617	180	434	.037	.127	.520	-.460	180	512	-.106	.105	.247	-.550
180	343	-.038	.110	.316	-.423	180	435	.001	.134	.672	-.666	180	513	-.120	.118	.250	-.822
180	344	-.036	.093	.331	-.436	180	436	-.057	.114	.372	-.427	180	514	-.115	.106	.260	-.528
180	345	-.064	.109	.377	-.431	180	437	-.046	.105	.272	-.408	180	515	-.099	.113	.338	-.526
180	346	-.103	.119	.268	-.566	180	438	-.006	.107	.372	-.341	180	516	-.114	.110	.200	-.713
180	347	-.092	.113	.308	-.454	180	439	.002	.104	.367	-.344	180	517	-.122	.111	.266	-.765
180	348	-.101	.114	.233	-.506	180	440	.015	.108	.356	-.372	180	518	-.117	.110	.237	-.637
180	349	-.044	.117	.285	-.520	180	441	.028	.116	.504	-.320	180	519	-.113	.102	.216	-.446
180	350	-.041	.115	.360	-.415	180	442	.015	.118	.472	-.434	180	520	-.107	.110	.275	-.484
180	351	-.054	.108	.285	-.428	180	443	.002	.126	.555	-.620	180	521	-.131	.117	.198	-.659
180	352	-.085	.121	.349	-.464	180	444	-.075	.111	.268	-.471	180	522	-.135	.109	.190	-.555
180	353	-.077	.113	.350	-.464	180	445	-.042	.100	.304	-.345	180	523	-.144	.129	.235	-.831
180	354	-.082	.115	.321	-.464	180	446	-.019	.107	.312	-.423	180	524	-.133	.111	.242	-.652
180	355	-.059	.116	.422	-.380	180	447	-.005	.101	.312	-.358	180	525	-.105	.111	.256	-.508
180	356	-.045	.107	.383	-.409	180	448	.013	.109	.382	-.316	180	526	-.118	.106	.206	-.568
180	357	-.073	.107	.321	-.488	180	449	.010	.112	.447	-.308	180	527	-.135	.119	.263	-.958
180	358	-.059	.105	.398	-.424	180	450	.002	.119	.375	-.541	180	528	-.145	.130	.247	-.790
180	401	-.144	.144	.450	-.662	180	451	-.017	.121	.390	-.485	180	529	-.133	.107	.218	-.546
180	402	-.149	.200	.733	-1.142	180	452	-.080	.104	.276	-.511	180	530	-.134	.116	.220	-.544
180	403	-.060	.270	1.028	-1.328	180	453	-.063	.099	.273	-.391	180	531	-.101	.104	.247	-.426
180	404	-.026	.143	.618	-.582	180	454	-.041	.103	.340	-.466	180	532	-.110	.103	.217	-.455
180	405	-.001	.143	.586	-.483	180	455	-.012	.102	.437	-.367	180	533	-.113	.105	.270	-.488
180	406	.018	.152	.636	-.434	180	456	.004	.098	.320	-.332	180	534	-.107	.119	.239	-.536
180	407	.013	.142	.609	-.421	180	457	.006	.096	.374	-.352	180	601	-.105	.116	.302	-.584
180	408	.017	.159	.806	-.472	180	458	-.009	.108	.320	-.376	180	602	-.100	.109	.199	-.483
180	409	.002	.177	.809	-.543	180	459	-.031	.104	.304	-.378	180	603	-.110	.119	.309	-.546
180	410	.025	.171	.870	-.985	180	460	-.040	.106	.333	-.340	180	604	-.119	.121	.258	-.654
180	411	.020	.186	.798	-.951	180	461	-.021	.104	.304	-.512	180	605	-.110	.115	.330	-.500
180	412	-.036	.117	.424	-.625	180	462	.005	.107	.385	-.411	180	606	-.101	.118	.295	-.586
180	413	.005	.126	.486	-.370	180	463	-.001	.111	.395	-.364	180	607	-.109	.125	.343	-.668
180	414	.047	.142	.634	-.363	180	464	-.014	.107	.407	-.385	180	608	-.114	.110	.211	-.775
180	415	.065	.141	.773	-.370	180	465	-.025	.102	.328	-.484	180	609	-.100	.110	.229	-.495
180	416	.069	.155	.917	-.428	180	466	-.012	.111	.301	-.354	180	610	-.101	.103	.284	-.495
180	417	.091	.152	.912	-.340	180	467	.006	.109	.335	-.359	180	611	-.106	.115	.274	-.728
180	418	.085	.162	.891	-.511	180	468	.002	.099	.319	-.327	180	612	-.105	.101	.270	-.432
180	419	.056	.178	.808	-.702	180	469	.019	.103	.391	-.327	180	613	-.115	.119	.287	-.705
180	420	-.051	.114	.315	-.480	180	470	.007	.110	.424	-.354	180	614	-.112	.107	.257	-.512
180	421	-.027	.113	.372	-.427	180	471	.003	.111	.426	-.378	180	615	-.109	.107	.274	-.516
180	422	.011	.111	.414	-.328	180	472	-.057	.090	.247	-.418	180	616	-.116	.115	.219	-.550
180	423	.040	.133	.532	-.419	180	501	-.121	.114	.221	-.793	180	617	-.114	.114	.195	-.535
180	424	.057	.121	.534	-.318	180	502	-.120	.122	.273	-.531	180	618	-.116	.113	.221	-.671
180	425	.061	.131	.493	-.394	180	503	-.111	.117	.259	-.556	180	619	-.114	.106	.250	-.478

WD	TAP	CPMEAN	CPRMS	CPMAX	CPMIN	WD	TAP	CPMEAN	CPRMS	CPMAX	CPMIN	WD	TAP	CPMEAN	CPRMS	CPMAX	CPMIN
180	620	-.112	.118	.320	-.557	180	921	-.084	.133	.367	-.570	180	1224	-.008	.094	.300	-.263
180	621	-.105	.118	.270	-.711	180	1101	-.111	.099	.178	-.423	180	1225	-.067	.100	.239	-.423
180	622	-.107	.121	.235	-.632	180	1102	-.121	.109	.207	-.478	180	1226	-.064	.085	.215	-.347
180	623	-.109	.124	.217	-.664	180	1103	-.108	.115	.266	-.680	180	1227	-.063	.083	.256	-.410
180	624	-.088	.118	.253	-.545	180	1104	-.075	.091	.226	-.467	180	1228	-.051	.099	.235	-.456
180	625	-.087	.122	.343	-.733	180	1105	-.077	.100	.245	-.397	180	1229	-.053	.087	.305	-.328
180	626	-.097	.110	.301	-.596	180	1106	-.087	.105	.266	-.558	180	1301	-.052	.110	.299	-.429
180	627	-.100	.117	.265	-.502	180	1107	-.066	.096	.224	-.395	180	1302	-.047	.113	.300	-.399
180	628	-.088	.103	.256	-.568	180	1108	-.058	.095	.212	-.405	180	1303	-.055	.115	.413	-.450
180	629	-.073	.118	.296	-.781	180	1109	-.078	.099	.229	-.413	180	1304	-.082	.097	.218	-.413
180	630	-.072	.107	.276	-.471	180	1110	-.041	.091	.251	-.348	180	1305	-.028	.097	.364	-.361
180	631	-.084	.112	.281	-.512	180	1111	-.069	.101	.243	-.376	180	1306	-.054	.097	.286	-.429
180	632	-.081	.103	.293	-.476	180	1112	-.062	.093	.226	-.392	180	1307	-.075	.092	.297	-.393
180	633	-.061	.101	.267	-.369	180	1113	-.056	.097	.218	-.397	180	1308	-.105	.103	.212	-.489
180	634	-.066	.095	.231	-.391	180	1114	-.060	.096	.270	-.384	180	1309	-.094	.093	.193	-.378
180	801	-.060	.120	.373	-.458	180	1115	-.076	.102	.220	-.445	180	1311	-.041	.102	.319	-.402
180	802	-.062	.113	.361	-.441	180	1116	-.066	.103	.304	-.421	180	1312	-.042	.096	.262	-.361
180	803	-.078	.098	.255	-.454	180	1117	-.068	.096	.228	-.386	180	1313	-.062	.106	.300	-.453
180	804	-.073	.107	.281	-.499	180	1118	-.078	.103	.241	-.458	180	1314	-.054	.096	.271	-.367
180	805	-.079	.106	.253	-.475	180	1119	-.058	.100	.196	-.356	180	1315	-.079	.090	.217	-.428
180	806	-.077	.109	.306	-.449	180	1120	-.051	.098	.251	-.406	180	1316	-.077	.101	.182	-.385
180	807	-.069	.113	.351	-.377	180	1121	-.072	.101	.250	-.441	180	1317	-.018	.096	.327	-.369
180	808	-.088	.104	.274	-.435	180	1122	-.064	.105	.268	-.449	180	1318	-.065	.100	.257	-.389
180	809	-.079	.105	.258	-.476	180	1123	-.062	.103	.295	-.505	180	1319	-.038	.099	.325	-.375
180	810	-.082	.105	.265	-.418	180	1124	-.055	.091	.225	-.341	180	1320	-.025	.092	.268	-.345
180	811	-.109	.113	.224	-.504	180	1125	-.055	.100	.297	-.386	180	1321	-.056	.102	.325	-.401
180	812	-.104	.100	.202	-.441	180	1126	-.054	.100	.268	-.372	180	1322	-.071	.097	.260	-.353
180	813	-.097	.111	.238	-.538	180	1201	-.108	.104	.199	-.492	180	1323	-.066	.097	.239	-.399
180	814	-.156	.132	.207	-.741	180	1202	-.119	.131	.283	-.728	180	1324	.014	.095	.313	-.318
180	815	-.145	.106	.246	-.507	180	1203	-.123	.123	.277	-.592	180	1325	.004	.101	.367	-.354
180	901	-.202	.152	.201	-.806	180	1204	-.103	.108	.268	-.498	180	1326	-.007	.092	.320	-.326
180	902	-.330	.243	.320	-1.479	180	1205	-.095	.129	.311	-.860	180	1327	-.022	.110	.405	-.324
180	903	-.138	.156	.400	-.867	180	1206	-.124	.130	.261	-.893	180	1328	-.075	.093	.201	-.361
180	904	-.091	.147	.302	-.951	180	1207	-.115	.107	.209	-.590	180	1329	-.067	.096	.209	-.413
180	905	-.105	.179	.598	-.819	180	1208	-.074	.100	.227	-.479	180	1330	-.071	.120	.456	-.463
180	906	-.113	.119	.292	-.607	180	1209	-.069	.086	.288	-.381	180	1331	-.059	.121	.475	-.442
180	907	-.204	.169	.332	-1.105	180	1210	-.076	.094	.227	-.351	180	1401	-.098	.095	.172	-.551
180	908	-.099	.126	.328	-.551	180	1211	-.100	.092	.193	-.403	180	1402	-.136	.111	.192	-.557
180	909	-.051	.129	.379	-.799	180	1212	-.089	.099	.234	-.444	180	1403	-.146	.108	.185	-.589
180	910	-.094	.116	.295	-.700	180	1213	-.094	.096	.217	-.405	180	1404	-.099	.102	.241	-.564
180	911	-.157	.141	.285	-.810	180	1214	-.027	.109	.462	-.365	180	1405	-.093	.096	.214	-.511
180	912	-.145	.154	.381	-.888	180	1215	-.078	.090	.212	-.370	180	1406	-.131	.105	.219	-.531
180	913	-.048	.130	.470	-.551	180	1216	-.067	.110	.274	-.467	180	1407	-.113	.099	.204	-.447
180	914	-.088	.124	.419	-.626	180	1217	-.063	.095	.264	-.391	180	1408	-.090	.103	.222	-.465
180	915	-.092	.143	.467	-.598	180	1218	-.064	.088	.263	-.365	180	1409	-.076	.094	.222	-.474
180	916	-.040	.119	.472	-.576	180	1219	-.066	.097	.222	-.362	180	1410	-.062	.094	.292	-.450
180	917	-.050	.113	.460	-.492	180	1220	-.072	.093	.206	-.427	180	1411	-.084	.097	.178	-.445
180	918	-.025	.122	.423	-.458	180	1221	-.065	.096	.290	-.435	180	1412	-.099	.105	.234	-.639
180	919	-.074	.126	.360	-.548	180	1222	-.065	.090	.193	-.393	180	1413	-.110	.099	.216	-.459
180	920	-.111	.135	.320	-.899	180	1223	-.062	.098	.234	-.408	180	1414	-.074	.103	.243	-.469

WD	TAP	CPMEAN	CPRMS	CPMAX	CPMIN	WD	TAP	CPMEAN	CPRMS	CPMAX	CPMIN	WD	TAP	CPMEAN	CPRMS	CPMAX	CPMIN
180	1415	-.071	.088	.219	-.404	180	1930	-.082	.101	.199	-.562	190	112	-.078	.134	.323	-.605
180	1416	-.074	.097	.260	-.503	180	1931	-.068	.092	.270	-.391	190	113	-.084	.111	.321	-.484
180	1417	-.094	.102	.212	-.479	180	1932	-.063	.083	.187	-.333	190	114	-.084	.122	.292	-.588
180	1418	-.109	.115	.265	-.490	180	1933	-.076	.093	.256	-.396	190	115	-.081	.115	.297	-.614
180	1419	-.087	.105	.185	-.410	180	1934	-.074	.102	.249	-.445	190	116	-.091	.127	.343	-.778
180	1420	-.121	.118	.287	-.489	180	1935	-.070	.095	.281	-.426	190	117	-.067	.111	.309	-.545
180	1421	-.105	.112	.329	-.466	180	1936	-.075	.095	.262	-.404	190	118	-.074	.107	.242	-.475
180	1422	-.074	.101	.232	-.453	180	1937	-.080	.104	.256	-.464	190	119	-.075	.119	.299	-.436
180	1423	-.060	.096	.223	-.470	180	1938	-.076	.096	.202	-.415	190	120	-.075	.108	.271	-.540
180	1424	-.061	.117	.309	-.573	180	1939	-.068	.088	.180	-.362	190	121	-.076	.106	.268	-.477
180	1425	-.089	.105	.271	-.457	180	1940	-.071	.100	.278	-.504	190	122	-.081	.110	.254	-.468
180	1426	-.094	.095	.232	-.392	180	1941	-.068	.100	.263	-.512	190	123	-.089	.121	.353	-.626
180	1427	-.046	.100	.283	-.385	180	1942	-.073	.097	.257	-.407	190	124	-.089	.108	.277	-.494
180	1428	-.046	.095	.225	-.489	180	1943	-.082	.100	.306	-.390	190	125	-.087	.104	.318	-.434
180	1429	-.048	.098	.294	-.429	180	1944	-.079	.085	.163	-.338	190	126	-.075	.116	.389	-.403
180	1430	-.053	.096	.237	-.407	180	1945	-.087	.097	.199	-.406	190	127	-.078	.109	.289	-.464
180	1431	-.079	.105	.235	-.622	180	1946	-.079	.103	.287	-.515	190	128	-.079	.107	.228	-.522
180	1432	-.091	.099	.232	-.458	180	1947	-.078	.100	.274	-.415	190	129	-.076	.112	.321	-.543
180	1433	-.074	.100	.289	-.442	180	1948	-.075	.090	.209	-.434	190	130	-.073	.119	.273	-.448
180	1434	-.115	.103	.191	-.721	180	1949	-.078	.098	.245	-.410	190	131	-.079	.115	.356	-.500
180	1435	-.109	.102	.229	-.511	180	1950	-.077	.084	.194	-.371	190	132	-.078	.113	.296	-.426
180	1901	-.078	.094	.240	-.365	180	1951	-.093	.099	.275	-.417	190	133	-.081	.113	.309	-.543
180	1902	.068	.082	.298	-.315	180	1952	-.100	.106	.217	-.468	190	134	-.088	.116	.359	-.531
180	1903	.176	.087	.482	-.122	180	1953	-.102	.104	.217	-.546	190	135	-.085	.108	.259	-.476
180	1904	-.029	.098	.273	-.336	180	1954	-.092	.098	.185	-.562	190	136	-.090	.106	.273	-.483
180	1905	-.002	.099	.301	-.450	180	1955	-.076	.093	.275	-.412	190	137	-.078	.111	.311	-.486
180	1906	-.071	.098	.234	-.490	180	1956	-.077	.091	.191	-.399	190	138	-.076	.107	.245	-.507
180	1907	-.069	.095	.290	-.381	180	1957	-.086	.091	.249	-.376	190	139	-.084	.113	.273	-.476
180	1908	-.087	.093	.180	-.386	180	1958	-.085	.098	.208	-.470	190	140	-.081	.115	.240	-.488
180	1909	-.076	.086	.259	-.343	180	1959	-.079	.091	.263	-.357	190	141	-.076	.114	.318	-.438
180	1910	-.083	.098	.217	-.434	180	1960	-.080	.094	.238	-.385	190	142	-.064	.113	.285	-.521
180	1911	-.064	.095	.286	-.413	180	1961	-.082	.100	.235	-.431	190	143	-.076	.106	.325	-.445
180	1912	-.063	.094	.247	-.374	180	1962	-.062	.097	.210	-.454	190	144	-.086	.107	.225	-.415
180	1913	-.065	.103	.267	-.431	180	1963	-.055	.086	.206	-.328	190	145	-.081	.113	.363	-.600
180	1914	-.076	.093	.199	-.408	180	1964	-.062	.094	.303	-.412	190	146	-.078	.107	.296	-.400
180	1915	-.063	.090	.183	-.350	180	1965	-.082	.096	.244	-.448	190	147	-.073	.107	.268	-.396
180	1916	-.079	.098	.289	-.493	180	1966	-.082	.096	.241	-.421	190	148	-.072	.104	.282	-.467
180	1917	-.073	.099	.242	-.465	180	1967	-.087	.100	.297	-.371	190	149	-.074	.109	.280	-.472
180	1918	-.077	.095	.244	-.389	180	1968	-.082	.096	.191	-.393	190	150	-.068	.102	.323	-.415
180	1919	-.081	.102	.311	-.378	190	101	-.120	.120	.275	-.680	190	151	-.068	.112	.256	-.478
180	1920	-.067	.096	.209	-.381	190	102	-.125	.121	.258	-.530	190	152	-.073	.111	.242	-.459
180	1921	-.079	.097	.200	-.442	190	103	-.176	.146	.241	-.706	190	153	-.108	.115	.259	-.599
180	1922	-.077	.101	.270	-.434	190	104	-.072	.116	.398	-.511	190	154	-.077	.117	.280	-.502
180	1923	-.072	.101	.253	-.437	190	105	-.064	.136	.389	-.810	190	155	-.074	.108	.309	-.448
180	1924	-.074	.090	.199	-.420	190	106	-.080	.124	.302	-.651	190	156	-.075	.109	.315	-.474
180	1925	-.084	.102	.234	-.520	190	107	-.080	.131	.316	-.622	190	157	-.075	.117	.318	-.517
180	1926	-.069	.085	.194	-.365	190	108	-.076	.122	.288	-.521	190	158	-.076	.125	.332	-.519
180	1927	-.072	.095	.279	-.338	190	109	-.075	.119	.335	-.646	190	159	-.079	.099	.254	-.364
180	1928	-.073	.101	.238	-.424	190	110	-.084	.124	.294	-.603	190	160	-.081	.114	.330	-.510
180	1929	-.077	.102	.241	-.431	190	111	-.078	.123	.314	-.562	190	161	-.085	.112	.282	-.493

WD	TAP	CPMEAN	CPRMS	CPMAX	CPMIN	WD	TAP	CPMEAN	CPRMS	CPMAX	CPMIN	WD	TAP	CPMEAN	CPRMS	CPMAX	CPMIN
190	162	-.109	.123	.282	-.590	190	225	-.083	.119	.268	-.514	190	303	.018	.216	.897	-.630
190	163	-.094	.114	.232	-.578	190	226	-.085	.111	.282	-.497	190	304	-.239	.234	.450	-1.279
190	164	-.072	.105	.218	-.429	190	227	-.087	.119	.265	-.471	190	305	-.135	.160	.392	-1.083
190	165	-.066	.114	.290	-.467	190	228	-.128	.136	.223	-.734	190	306	-.176	.135	.339	-.848
190	166	-.069	.104	.302	-.441	190	229	-.113	.127	.297	-.578	190	307	.095	.245	.365	-.829
190	167	-.068	.104	.237	-.483	190	230	-.111	.130	.271	-.705	190	308	.068	.206	.841	-1.449
190	168	-.080	.109	.277	-.434	190	231	-.087	.121	.294	-.545	190	309	-.056	.186	.737	-.907
190	169	-.092	.118	.275	-.559	190	232	-.076	.123	.328	-.502	190	310	-.260	.240	.438	-1.413
190	170	-.092	.113	.283	-.446	190	233	-.073	.097	.235	-.397	190	311	-.180	.188	.446	-1.208
190	171	-.097	.105	.251	-.453	190	234	-.078	.113	.297	-.495	190	312	-.203	.144	.241	-.789
190	172	-.117	.119	.238	-.530	190	235	-.080	.112	.299	-.542	190	313	.032	.211	.914	-.960
190	173	-.122	.123	.304	-.577	190	236	-.109	.135	.251	-1.264	190	314	.008	.201	.751	-1.014
190	174	-.089	.109	.255	-.441	190	237	-.081	.114	.290	-.678	190	315	-.102	.179	.465	-.814
190	175	-.080	.108	.308	-.444	190	238	-.085	.110	.249	-.636	190	316	-.224	.205	.368	-1.360
190	176	-.085	.108	.294	-.462	190	239	-.086	.112	.270	-.457	190	317	-.192	.178	.368	-1.128
190	177	-.078	.105	.235	-.415	190	240	-.075	.104	.290	-.414	190	318	-.210	.138	.275	-.741
190	178	-.104	.108	.311	-.479	190	241	-.070	.106	.275	-.507	190	319	-.092	.212	.658	-1.069
190	179	-.116	.124	.262	-.557	190	242	-.073	.105	.273	-.423	190	320	-.068	.158	.738	-1.033
190	180	-.079	.111	.318	-.439	190	243	-.083	.120	.258	-.511	190	321	-.135	.163	.487	-.638
190	181	-.074	.106	.278	-.406	190	244	-.077	.108	.263	-.418	190	322	-.222	.184	.549	-.984
190	182	-.069	.099	.215	-.396	190	245	-.076	.100	.247	-.461	190	323	-.209	.170	.359	-1.018
190	183	-.111	.110	.271	-.503	190	246	-.109	.113	.212	-.540	190	324	-.185	.150	.385	-1.009
190	184	-.077	.104	.242	-.425	190	247	-.113	.108	.195	-.507	190	325	-.131	.159	.385	-.970
190	185	-.083	.107	.269	-.441	190	248	-.104	.107	.198	-.484	190	326	-.098	.144	.409	-.924
190	186	-.068	.109	.271	-.423	190	249	-.098	.114	.255	-.503	190	327	-.115	.120	.354	-.570
190	187	-.121	.114	.242	-.528	190	250	-.098	.105	.255	-.474	190	328	-.207	.161	.444	-.972
190	201	-.237	.159	.356	-.923	190	251	-.104	.113	.318	-.535	190	329	-.170	.137	.361	-.740
190	202	-.221	.150	.202	-1.072	190	252	-.109	.106	.346	-.437	190	330	-.147	.124	.285	-.628
190	203	-.123	.120	.266	-.604	190	253	-.114	.111	.229	-.486	190	331	-.140	.141	.400	-.721
190	204	-.251	.171	.186	-1.035	190	254	-.101	.108	.278	-.439	190	332	-.090	.127	.283	-.711
190	205	-.231	.159	.229	-.858	190	255	-.103	.109	.258	-.444	190	333	-.124	.122	.346	-.526
190	206	-.171	.144	.265	-.676	190	256	-.100	.115	.248	-.538	190	334	-.155	.078	.052	-.425
190	207	-.134	.140	.328	-.786	190	257	-.090	.112	.314	-.463	190	335	-.145	.124	.231	-.743
190	208	-.117	.135	.369	-.760	190	258	-.089	.112	.273	-.416	190	336	-.121	.126	.358	-.634
190	209	-.109	.132	.290	-.676	190	259	-.089	.111	.288	-.482	190	337	-.109	.133	.271	-.762
190	210	-.108	.121	.313	-.726	190	260	-.106	.109	.217	-.503	190	338	-.083	.120	.302	-.511
190	211	-.097	.126	.328	-.657	190	261	-.111	.108	.235	-.497	190	339	-.097	.111	.281	-.455
190	212	-.224	.155	.220	-.884	190	262	-.101	.110	.242	-.450	190	340	-.133	.124	.295	-.597
190	213	-.227	.155	.247	-1.159	190	263	-.098	.114	.247	-.495	190	341	-.121	.112	.240	-.474
190	214	-.225	.168	.265	-.896	190	264	-.096	.116	.240	-.517	190	342	-.119	.112	.281	-.516
190	215	-.131	.138	.294	-.767	190	265	-.092	.102	.249	-.509	190	343	-.110	.113	.259	-.575
190	216	-.088	.119	.301	-.555	190	266	-.099	.112	.228	-.479	190	344	-.085	.107	.261	-.475
190	217	-.088	.118	.325	-.619	190	267	-.090	.108	.351	-.446	190	345	-.094	.117	.300	-.472
190	218	-.086	.117	.227	-.569	190	268	-.103	.119	.289	-.629	190	346	-.136	.124	.264	-.685
190	219	-.097	.125	.327	-.626	190	269	-.088	.106	.252	-.413	190	347	-.109	.113	.281	-.555
190	220	-.165	.145	.271	-.832	190	270	-.088	.110	.290	-.439	190	348	-.107	.113	.243	-.451
190	221	-.171	.148	.246	-.714	190	271	-.091	.119	.374	-.507	190	349	-.111	.120	.296	-.531
190	222	-.130	.131	.308	-.772	190	272	-.087	.112	.253	-.538	190	350	-.084	.112	.290	-.467
190	223	-.111	.123	.299	-.561	190	301	.075	.263	1.011	-.933	190	351	-.091	.119	.258	-.526
190	224	-.089	.109	.289	-.516	190	302	.083	.230	1.306	-.937	190	352	-.124	.120	.305	-.580

WD	TAP	CPMEAN	CPRMS	CPMAX	CPMIN	WD	TAP	CPMEAN	CPRMS	CPMAX	CPMIN	WD	TAP	CPMEAN	CPRMS	CPMAX	CPMIN
190	353	-.104	.112	.242	-.533	190	445	-.007	.118	.451	-.349	190	523	-.137	.128	.232	-.772
190	354	-.100	.117	.366	-.517	190	446	.024	.110	.376	-.302	190	524	-.141	.124	.223	-.636
190	355	-.113	.115	.310	-.590	190	447	.057	.117	.453	-.286	190	525	-.113	.128	.328	-.613
190	356	-.101	.112	.265	-.515	190	448	.044	.105	.380	-.317	190	526	-.124	.121	.223	-.664
190	357	-.099	.110	.312	-.461	190	449	.039	.120	.534	-.381	190	527	-.147	.135	.258	-.868
190	358	-.083	.115	.246	-.515	190	450	.064	.117	.437	-.415	190	528	-.161	.140	.188	-1.909
190	401	-.165	.174	.419	-1.000	190	451	-.036	.120	.386	-.410	190	529	-.138	.116	.220	-.564
190	402	-.092	.212	.688	-1.061	190	452	-.074	.113	.334	-.434	190	530	-.142	.120	.232	-.577
190	403	.116	.240	.923	-.950	190	453	-.057	.111	.274	-.466	190	531	-.118	.112	.357	-.494
190	404	-.008	.144	.744	-.417	190	454	-.023	.107	.291	-.393	190	532	-.140	.126	.277	-.599
190	405	.036	.156	.681	-.523	190	455	.028	.104	.347	-.303	190	533	-.117	.116	.263	-.503
190	406	.063	.179	.719	-.419	190	456	.041	.105	.390	-.268	190	534	-.135	.133	.319	-.596
190	407	.050	.168	.771	-.392	190	457	.016	.111	.366	-.358	190	601	-.122	.135	.331	-.699
190	408	.066	.180	.988	-.417	190	458	-.017	.103	.392	-.327	190	602	-.128	.128	.247	-.685
190	409	.082	.201	1.115	-.521	190	459	-.046	.122	.378	-.427	190	603	-.133	.131	.254	-.613
190	410	.110	.201	.877	-.511	190	460	-.008	.113	.357	-.360	190	604	-.132	.124	.228	-.756
190	411	.115	.216	.945	-.446	190	461	.034	.106	.357	-.315	190	605	-.128	.124	.289	-.615
190	412	-.004	.137	.650	-.448	190	462	.038	.117	.459	-.350	190	606	-.129	.122	.227	-.580
190	413	.047	.154	.813	-.353	190	463	.033	.113	.434	-.336	190	607	-.130	.124	.235	-.861
190	414	.120	.168	.973	-.332	190	464	-.023	.114	.371	-.397	190	608	-.141	.135	.268	-.667
190	415	.115	.161	.731	-.319	190	465	-.050	.116	.323	-.447	190	609	-.127	.117	.214	-.520
190	416	.132	.166	.830	-.339	190	466	.043	.113	.509	-.343	190	610	-.126	.122	.214	-.590
190	417	.125	.169	.786	-.334	190	467	.068	.117	.457	-.323	190	611	-.116	.114	.247	-.508
190	418	.145	.182	.976	-.404	190	468	.068	.112	.467	-.426	190	612	-.127	.115	.212	-.761
190	419	.105	.210	1.097	-.465	190	469	.063	.112	.478	-.308	190	613	-.123	.115	.240	-.705
190	420	-.019	.123	.560	-.479	190	470	.038	.117	.405	-.367	190	614	-.103	.105	.294	-.439
190	421	.023	.149	.778	-.446	190	471	.028	.104	.384	-.383	190	615	-.106	.118	.287	-.552
190	422	.077	.146	.926	-.436	190	472	-.048	.103	.305	-.456	190	616	-.114	.119	.291	-.562
190	423	.101	.150	.795	-.404	190	501	-.139	.129	.286	-.716	190	617	-.089	.106	.249	-.420
190	424	.108	.136	.865	-.300	190	502	-.124	.128	.343	-.596	190	618	-.087	.098	.171	-.400
190	425	.088	.138	.663	-.384	190	503	-.127	.123	.305	-.563	190	619	-.091	.108	.306	-.468
190	426	.045	.138	.569	-.399	190	504	-.122	.131	.261	-.900	190	620	-.097	.109	.240	-.494
190	427	.007	.136	.616	-.591	190	505	-.131	.129	.286	-.867	190	621	-.093	.109	.261	-.505
190	428	-.029	.124	.521	-.499	190	506	-.125	.112	.296	-.645	190	622	-.088	.114	.289	-.639
190	429	.029	.139	.679	-.390	190	507	-.124	.124	.228	-.587	190	623	-.090	.107	.287	-.447
190	430	.078	.136	.805	-.382	190	508	-.117	.128	.281	-.658	190	624	-.094	.112	.242	-.503
190	431	.090	.134	.787	-.295	190	509	-.126	.123	.261	-.832	190	625	-.074	.108	.262	-.572
190	432	.072	.129	.616	-.329	190	510	-.129	.127	.322	-.757	190	626	-.086	.104	.225	-.399
190	433	.067	.129	.732	-.422	190	511	-.123	.132	.262	-.713	190	627	-.101	.117	.280	-.477
190	434	.029	.131	.637	-.456	190	512	-.117	.124	.247	-.679	190	628	-.094	.104	.294	-.538
190	435	-.018	.134	.649	-.480	190	513	-.134	.131	.245	-.776	190	629	-.087	.109	.306	-.475
190	436	-.024	.128	.451	-.405	190	514	-.121	.125	.230	-.757	190	630	-.084	.106	.301	-.470
190	437	.008	.124	.405	-.467	190	515	-.114	.130	.397	-1.036	190	631	-.085	.105	.226	-.420
190	438	.049	.129	.478	-.373	190	516	-.116	.130	.266	-.635	190	632	-.081	.104	.218	-.510
190	439	.077	.125	.528	-.317	190	517	-.135	.128	.222	-.801	190	633	-.081	.107	.294	-.503
190	440	.067	.126	.586	-.380	190	518	-.131	.127	.230	-.664	190	634	-.082	.107	.245	-.411
190	441	.047	.118	.453	-.380	190	519	-.125	.131	.390	-.883	190	801	-.096	.113	.258	-.423
190	442	.016	.127	.582	-.370	190	520	-.128	.127	.291	-.745	190	802	-.107	.121	.259	-.569
190	443	-.034	.116	.395	-.533	190	521	-.151	.136	.303	-.881	190	803	-.075	.102	.240	-.404
190	444	-.044	.111	.337	-.400	190	522	-.150	.125	.254	-.838	190	804	-.085	.099	.265	-.487

WD	TAP	CPMEAN	CPRMS	CPMAX	CPMIN
190	805	-.082	.103	.252	-.400
190	806	-.079	.101	.261	-.406
190	807	-.096	.107	.252	-.437
190	808	-.095	.105	.256	-.399
190	809	-.085	.105	.259	-.468
190	810	-.096	.107	.335	-.446
190	811	-.135	.119	.237	-.567
190	812	-.125	.123	.282	-.519
190	813	-.094	.122	.353	-.503
190	814	-.163	.130	.252	-.632
190	815	-.150	.116	.216	-.560
190	901	-.168	.142	.355	-.798
190	902	-.347	.263	.502	-2.105
190	903	-.111	.134	.359	-.682
190	904	-.114	.151	.299	-.875
190	905	-.030	.193	.760	-.892
190	906	-.138	.129	.268	-.634
190	907	-.248	.185	.324	-1.165
190	908	-.112	.127	.290	-.696
190	909	-.042	.131	.562	-.542
190	910	-.115	.122	.246	-.752
190	911	-.198	.154	.300	-.940
190	912	-.165	.160	.304	-1.071
190	913	-.056	.125	.470	-.533
190	914	-.096	.135	.341	-.619
190	915	-.114	.161	.423	-.786
190	916	-.038	.135	.418	-.504
190	917	-.057	.124	.429	-.550
190	918	-.035	.124	.398	-.453
190	919	-.085	.140	.403	-.761
190	920	-.128	.156	.343	-1.053
190	921	-.109	.137	.461	-.660
190	1101	-.140	.105	.218	-.488
190	1102	-.131	.106	.203	-.504
190	1103	-.131	.112	.200	-.592
190	1104	-.080	.095	.192	-.378
190	1105	-.075	.099	.279	-.393
190	1106	-.096	.098	.239	-.444
190	1107	-.082	.104	.258	-.452
190	1108	-.071	.096	.236	-.384
190	1109	-.082	.094	.241	-.394
190	1110	-.056	.095	.286	-.376
190	1111	-.074	.101	.248	-.384
190	1112	-.064	.101	.254	-.422
190	1113	-.078	.097	.261	-.411
190	1114	-.077	.098	.215	-.366
190	1115	-.084	.103	.349	-.414
190	1116	-.081	.110	.297	-.467
190	1117	-.073	.097	.226	-.378
190	1118	-.086	.095	.241	-.384

WD	TAP	CPMEAN	CPRMS	CPMAX	CPMIN
190	1119	-.071	.108	.306	-.452
190	1120	-.073	.106	.302	-.455
190	1121	-.082	.101	.289	-.409
190	1122	-.075	.102	.307	-.407
190	1123	-.070	.096	.231	-.380
190	1124	-.077	.098	.206	-.433
190	1125	-.071	.105	.306	-.407
190	1126	-.078	.097	.221	-.511
190	1201	-.145	.114	.182	-.591
190	1202	-.120	.130	.352	-.576
190	1203	-.147	.131	.229	-.590
190	1204	-.126	.115	.292	-.554
190	1205	-.093	.128	.383	-.595
190	1206	-.157	.145	.288	-.666
190	1207	-.138	.114	.223	-.679
190	1208	-.069	.101	.239	-.445
190	1209	-.080	.089	.269	-.400
190	1210	-.072	.094	.252	-.478
190	1211	-.137	.098	.199	-.471
190	1212	-.100	.096	.210	-.487
190	1213	-.091	.102	.292	-.433
190	1214	.011	.118	.370	-.440
190	1215	-.100	.090	.213	-.456
190	1216	-.081	.087	.192	-.358
190	1217	-.068	.095	.274	-.379
190	1218	-.069	.093	.272	-.348
190	1219	-.070	.089	.254	-.368
190	1220	-.073	.097	.187	-.391
190	1221	-.096	.104	.203	-.446
190	1222	-.063	.094	.285	-.348
190	1223	-.060	.091	.226	-.325
190	1224	.032	.095	.393	-.291
190	1225	-.086	.091	.225	-.396
190	1226	-.070	.083	.179	-.387
190	1227	-.061	.089	.215	-.365
190	1228	-.059	.098	.234	-.404
190	1229	-.065	.088	.283	-.373
190	1301	-.018	.114	.522	-.551
190	1302	.010	.120	.408	-.388
190	1303	-.010	.122	.374	-.417
190	1304	-.101	.107	.246	-.510
190	1305	-.003	.098	.365	-.365
190	1306	-.036	.096	.292	-.367
190	1307	-.084	.100	.208	-.463
190	1308	-.106	.100	.249	-.459
190	1309	-.088	.106	.241	-.450
190	1311	-.011	.109	.402	-.334
190	1312	-.017	.103	.398	-.367
190	1313	-.048	.115	.352	-.441
190	1314	-.033	.096	.291	-.335

WD	TAP	CPMEAN	CPRMS	CPMAX	CPMIN
190	1315	-.104	.100	.188	-.417
190	1316	-.084	.109	.294	-.456
190	1317	.013	.101	.345	-.400
190	1318	-.054	.102	.299	-.383
190	1319	-.009	.095	.273	-.312
190	1320	.018	.096	.380	-.277
190	1321	-.025	.101	.332	-.376
190	1322	-.100	.095	.170	-.454
190	1323	-.075	.104	.253	-.429
190	1324	.041	.094	.357	-.304
190	1325	.042	.101	.461	-.282
190	1326	.039	.102	.418	-.285
190	1327	.048	.120	.531	-.300
190	1328	-.063	.107	.279	-.439
190	1329	-.074	.095	.268	-.411
190	1330	-.044	.110	.336	-.430
190	1331	-.031	.110	.370	-.410
190	1401	-.148	.114	.158	-.529
190	1402	-.154	.106	.168	-.583
190	1403	-.171	.126	.277	-.661
190	1404	-.121	.102	.190	-.606
190	1405	-.115	.104	.165	-.494
190	1406	-.146	.112	.235	-.546
190	1407	-.137	.113	.241	-.603
190	1408	-.100	.095	.269	-.441
190	1409	-.080	.099	.180	-.400
190	1410	-.084	.104	.232	-.429
190	1411	-.079	.101	.264	-.416
190	1412	-.090	.099	.206	-.372
190	1413	-.109	.101	.203	-.452
190	1414	-.081	.092	.237	-.449
190	1415	-.081	.089	.180	-.408
190	1416	-.070	.093	.209	-.402
190	1417	-.088	.101	.204	-.475
190	1418	-.116	.115	.259	-.564
190	1419	-.098	.110	.284	-.434
190	1420	-.132	.120	.273	-.595
190	1421	-.136	.122	.260	-.596
190	1422	-.077	.104	.298	-.427
190	1423	-.063	.090	.256	-.373
190	1424	-.056	.091	.264	-.338
190	1425	-.086	.104	.267	-.454
190	1426	-.100	.101	.252	-.437
190	1427	-.058	.092	.274	-.378
190	1428	-.052	.099	.216	-.409
190	1429	-.050	.101	.327	-.370
190	1430	-.045	.103	.316	-.342
190	1431	-.071	.101	.244	-.369
190	1432	-.083	.096	.239	-.398
190	1433	-.095	.110	.281	-.506

WD	TAP	CPMEAN	CPRMS	CPMAX	CPMIN	WD	TAP	CPMEAN	CPRMS	CPMAX	CPMIN	WD	TAP	CPMEAN	CPRMS	CPMAX	CPMIN
190	1434	-.130	.102	.174	-.529	190	1949	-.108	.098	.173	-.429	200	131	-.097	.118	.274	-.667
190	1435	-.113	.101	.211	-.530	190	1950	-.106	.100	.300	-.463	200	132	-.082	.122	.317	-.646
190	1901	-.080	.096	.241	-.461	190	1951	-.115	.112	.187	-.556	200	133	-.101	.111	.244	-.657
190	1902	.058	.095	.458	-.286	190	1952	-.120	.123	.366	-.548	200	134	-.106	.113	.249	-.470
190	1903	.171	.093	.442	-.222	190	1953	-.133	.102	.162	-.593	200	135	-.104	.115	.285	-.523
190	1904	-.027	.098	.322	-.339	190	1954	-.106	.105	.263	-.533	200	136	-.111	.117	.416	-.576
190	1905	.007	.088	.318	-.381	190	1955	-.108	.106	.237	-.482	200	137	-.110	.115	.333	-.513
190	1906	-.063	.099	.283	-.387	190	1956	-.102	.098	.186	-.480	200	138	-.096	.115	.285	-.486
190	1907	-.081	.102	.258	-.446	190	1957	-.121	.114	.231	-.537	200	139	-.098	.100	.230	-.532
190	1908	-.086	.097	.218	-.398	190	1958	-.106	.097	.208	-.395	200	140	-.098	.119	.288	-.537
190	1909	-.081	.105	.282	-.467	190	1959	-.105	.101	.252	-.490	200	141	-.089	.106	.256	-.631
190	1910	-.079	.091	.206	-.338	190	1960	-.101	.097	.263	-.413	200	142	-.083	.118	.268	-.528
190	1911	-.079	.098	.254	-.432	190	1961	-.117	.107	.256	-.530	200	143	-.091	.106	.285	-.438
190	1912	-.071	.096	.280	-.382	190	1962	-.044	.106	.363	-.369	200	144	-.108	.113	.228	-.525
190	1913	-.082	.104	.322	-.408	190	1963	-.046	.097	.284	-.365	200	145	-.106	.121	.240	-.480
190	1914	-.083	.095	.248	-.424	190	1964	-.070	.106	.279	-.466	200	146	-.107	.112	.262	-.580
190	1915	-.077	.100	.304	-.405	190	1965	-.111	.098	.171	-.477	200	147	-.107	.113	.327	-.527
190	1916	-.087	.103	.285	-.469	190	1966	-.102	.098	.269	-.439	200	148	-.100	.108	.244	-.463
190	1917	-.081	.094	.219	-.357	190	1967	-.097	.093	.186	-.430	200	149	-.097	.104	.278	-.451
190	1918	-.080	.093	.269	-.355	190	1968	-.098	.100	.194	-.422	200	150	-.098	.110	.276	-.540
190	1919	-.082	.092	.218	-.394	200	101	-.164	.138	.274	-.883	200	151	-.098	.113	.233	-.463
190	1920	-.070	.094	.203	-.363	200	102	-.161	.141	.276	-.830	200	152	-.095	.115	.410	-.479
190	1921	-.083	.095	.266	-.453	200	103	-.201	.154	.243	-.855	200	153	-.127	.109	.203	-.442
190	1922	-.084	.101	.250	-.534	200	104	-.112	.139	.460	-.823	200	154	-.106	.111	.280	-.472
190	1923	-.082	.101	.304	-.402	200	105	-.109	.142	.437	-.888	200	155	-.109	.116	.297	-.504
190	1924	-.076	.102	.227	-.430	200	106	-.122	.155	.376	-.889	200	156	-.099	.104	.235	-.460
190	1925	-.105	.100	.192	-.421	200	107	-.124	.133	.335	-.749	200	157	-.104	.115	.240	-.510
190	1926	-.087	.098	.325	-.430	200	108	-.122	.125	.303	-.551	200	158	-.117	.119	.326	-.635
190	1927	-.085	.103	.233	-.524	200	109	-.126	.124	.301	-.537	200	159	-.109	.108	.271	-.484
190	1928	-.077	.100	.281	-.393	200	110	-.121	.127	.291	-.600	200	160	-.110	.109	.283	-.554
190	1929	-.072	.093	.271	-.490	200	111	-.120	.131	.320	-.654	200	161	-.124	.126	.274	-.645
190	1930	-.077	.102	.283	-.427	200	112	-.119	.127	.362	-.613	200	162	-.133	.125	.261	-.819
190	1931	-.083	.099	.241	-.425	200	113	-.115	.129	.389	-.593	200	163	-.118	.117	.300	-.554
190	1932	-.067	.085	.181	-.335	200	114	-.125	.124	.267	-.796	200	164	-.089	.117	.381	-.443
190	1933	-.094	.112	.271	-.554	200	115	-.116	.132	.347	-.708	200	165	-.096	.121	.307	-.527
190	1934	-.080	.098	.208	-.469	200	116	-.116	.119	.286	-.734	200	166	-.108	.119	.285	-.657
190	1935	-.084	.100	.265	-.440	200	117	-.098	.113	.272	-.483	200	167	-.099	.120	.322	-.484
190	1936	-.078	.098	.294	-.396	200	118	-.096	.118	.337	-.554	200	168	-.109	.119	.329	-.494
190	1937	-.090	.105	.287	-.416	200	119	-.107	.126	.298	-.500	200	169	-.125	.110	.331	-.492
190	1938	-.082	.099	.307	-.377	200	120	-.114	.124	.288	-.547	200	170	-.133	.130	.274	-.682
190	1939	-.081	.099	.286	-.429	200	121	-.100	.119	.374	-.491	200	171	-.135	.121	.238	-.587
190	1940	-.087	.109	.304	-.466	200	122	-.107	.121	.318	-.530	200	172	-.156	.126	.262	-.651
190	1941	-.073	.098	.241	-.382	200	123	-.111	.114	.233	-.544	200	173	-.161	.125	.295	-.768
190	1942	-.080	.096	.289	-.395	200	124	-.116	.122	.286	-.546	200	174	-.112	.105	.220	-.424
190	1943	-.088	.091	.176	-.375	200	125	-.112	.115	.299	-.535	200	175	-.104	.102	.271	-.413
190	1944	-.089	.085	.152	-.362	200	126	-.116	.120	.213	-.583	200	176	-.116	.106	.276	-.479
190	1945	-.086	.100	.273	-.461	200	127	-.109	.114	.261	-.467	200	177	-.087	.115	.241	-.467
190	1946	-.088	.105	.263	-.437	200	128	-.104	.119	.250	-.527	200	178	-.131	.116	.266	-.707
190	1947	-.107	.109	.258	-.438	200	129	-.106	.121	.348	-.564	200	179	-.147	.124	.271	-.643
190	1948	-.097	.105	.229	-.446	200	130	-.104	.108	.278	-.506	200	180	-.110	.118	.262	-.563

WD	TAP	CPMEAN	CPRMS	CPMAX	CPMIN	WD	TAP	CPMEAN	CPRMS	CPMAX	CPMIN	WD	TAP	CPMEAN	CPRMS	CPMAX	CPMIN
200	181	-.110	.120	.387	-.597	200	244	-.114	.122	.274	-.572	200	322	-.237	.173	.248	-1.248
200	182	-.099	.105	.290	-.459	200	245	-.107	.119	.245	-.547	200	323	-.219	.171	.277	-1.121
200	183	-.158	.117	.200	-.587	200	246	-.146	.116	.208	-.535	200	324	-.210	.154	.272	-.884
200	184	-.109	.108	.205	-.511	200	247	-.153	.114	.276	-.507	200	325	-.241	.192	.285	-1.229
200	185	-.108	.112	.276	-.523	200	248	-.149	.113	.208	-.564	200	326	-.146	.156	.337	-.805
200	186	-.098	.110	.281	-.469	200	249	-.146	.112	.248	-.570	200	327	-.125	.126	.289	-.749
200	187	-.161	.116	.170	-.582	200	250	-.132	.123	.222	-.641	200	328	-.185	.149	.218	-1.091
200	201	-.181	.148	.318	-.821	200	251	-.142	.125	.241	-.589	200	329	-.190	.143	.309	-.847
200	202	-.217	.131	.295	-.690	200	252	-.157	.130	.255	-1.408	200	330	-.172	.136	.292	-.729
200	203	-.161	.136	.236	-.792	200	253	-.140	.119	.194	-1.012	200	331	-.215	.150	.223	-.818
200	204	-.199	.159	.309	-.961	200	254	-.147	.121	.248	-.682	200	332	-.128	.135	.354	-.685
200	205	-.182	.145	.299	-.772	200	255	-.161	.130	.270	-.825	200	333	-.125	.112	.188	-.665
200	206	-.161	.144	.299	-.664	200	256	-.124	.110	.220	-.495	200	334	-.156	.078	.050	-.377
200	207	-.126	.139	.311	-.620	200	257	-.124	.111	.223	-.555	200	335	-.157	.129	.334	-.635
200	208	-.146	.130	.291	-.905	200	258	-.121	.116	.273	-.476	200	336	-.142	.136	.295	-.656
200	209	-.132	.144	.359	-.871	200	259	-.133	.123	.297	-.490	200	337	-.188	.138	.262	-.833
200	210	-.144	.141	.318	-1.101	200	260	-.133	.120	.248	-.710	200	338	-.109	.135	.356	-.594
200	211	-.138	.137	.333	-.833	200	261	-.131	.122	.245	-.542	200	339	-.130	.123	.295	-.597
200	212	-.154	.144	.251	-.678	200	262	-.144	.110	.309	-.564	200	340	-.170	.132	.198	-.783
200	213	-.171	.140	.291	-.833	200	263	-.141	.115	.248	-.657	200	341	-.161	.114	.184	-.596
200	214	-.180	.139	.247	-.690	200	264	-.132	.121	.290	-.749	200	342	-.154	.118	.298	-.638
200	215	-.138	.130	.275	-.615	200	265	-.140	.115	.236	-.630	200	343	-.156	.129	.275	-.601
200	216	-.118	.126	.260	-.581	200	266	-.149	.114	.227	-.521	200	344	-.108	.114	.285	-.470
200	217	-.127	.121	.333	-.564	200	267	-.139	.116	.227	-.533	200	345	-.125	.114	.280	-.526
200	218	-.126	.128	.279	-.629	200	268	-.126	.121	.285	-.502	200	346	-.154	.124	.255	-.629
200	219	-.132	.135	.238	-.722	200	269	-.137	.126	.288	-.672	200	347	-.151	.126	.258	-.766
200	220	-.154	.149	.338	-.830	200	270	-.135	.117	.260	-.511	200	348	-.156	.125	.275	-.607
200	221	-.144	.140	.316	-1.045	200	271	-.128	.117	.208	-.594	200	349	-.148	.123	.236	-.733
200	222	-.134	.134	.250	-.728	200	272	-.129	.112	.217	-.660	200	350	-.093	.109	.297	-.547
200	223	-.126	.116	.292	-.492	200	301	-.028	.292	.829	-1.356	200	351	-.095	.111	.291	-.483
200	224	-.122	.122	.236	-.559	200	302	.009	.204	.760	-.861	200	352	-.162	.132	.229	-.640
200	225	-.126	.118	.391	-.682	200	303	-.057	.199	.763	-.778	200	353	-.124	.121	.241	-.556
200	226	-.129	.128	.386	-.533	200	304	-.338	.247	.357	-1.384	200	354	-.116	.114	.321	-.460
200	227	-.143	.134	.357	-.743	200	305	-.201	.171	.445	-1.063	200	355	-.171	.117	.216	-.638
200	228	-.111	.122	.263	-.574	200	306	-.178	.146	.286	-.751	200	356	-.119	.135	.307	-.657
200	229	-.113	.126	.297	-.682	200	307	-.046	.280	.974	-1.339	200	357	-.131	.123	.271	-.650
200	230	-.116	.117	.241	-.704	200	308	.010	.200	.816	-.912	200	358	-.118	.123	.307	-.642
200	231	-.122	.112	.229	-.489	200	309	-.105	.196	.661	-.835	200	401	-.229	.196	.475	-1.400
200	232	-.116	.115	.318	-.538	200	310	-.346	.233	.326	-1.421	200	402	-.190	.249	.828	-1.213
200	233	-.132	.111	.257	-.504	200	311	-.265	.192	.314	-1.056	200	403	.216	.246	1.310	-.798
200	234	-.134	.119	.226	-.601	200	312	-.212	.152	.279	-.779	200	404	.042	.171	.806	-.597
200	235	-.140	.135	.258	-.751	200	313	-.141	.261	.833	-1.209	200	405	.105	.184	.846	-.751
200	236	-.095	.116	.241	-.555	200	314	-.060	.217	.843	-1.101	200	406	.121	.198	.963	-.510
200	237	-.084	.113	.318	-.545	200	315	-.170	.189	.614	-.912	200	407	.132	.193	.865	-.443
200	238	-.089	.116	.342	-.504	200	316	-.253	.202	.293	-1.376	200	408	.133	.211	.926	-.512
200	239	-.111	.122	.262	-.617	200	317	-.261	.203	.241	-1.391	200	409	.128	.230	1.061	-.644
200	240	-.116	.119	.294	-.542	200	318	-.217	.161	.353	-.875	200	410	.163	.225	1.026	-.509
200	241	-.102	.118	.292	-.473	200	319	-.249	.230	.410	-1.482	200	411	.149	.219	1.078	-.497
200	242	-.105	.118	.338	-.499	200	320	-.149	.184	.469	-1.035	200	412	.060	.151	.625	-.528
200	243	-.124	.116	.340	-.595	200	321	-.178	.159	.295	-.840	200	413	.146	.160	.920	-.350

WD	TAP	CPMEAN	CPRMS	CPMAX	CPMIN	WD	TAP	CPMEAN	CPRMS	CPMAX	CPMIN	WD	TAP	CPMEAN	CPRMS	CPMAX	CPMIN
200	414	.250	.192	.923	-.286	200	464	-.004	.118	.417	-.369	200	608	-.164	.123	.241	-.775
200	415	.245	.178	.881	-.306	200	465	-.057	.113	.512	-.453	200	609	-.138	.111	.237	-.509
200	416	.252	.197	1.075	-.235	200	466	.109	.113	.513	-.304	200	610	-.143	.113	.214	-.719
200	417	.205	.178	.874	-.299	200	467	.143	.122	.561	-.242	200	611	-.135	.107	.228	-.490
200	418	.153	.177	1.152	-.328	200	468	.154	.119	.529	-.193	200	612	-.125	.109	.230	-.460
200	419	.083	.197	.974	-.540	200	469	.150	.121	.576	-.214	200	613	-.121	.118	.249	-.589
200	420	.036	.139	.565	-.414	200	470	.099	.117	.643	-.236	200	614	-.111	.109	.272	-.570
200	421	.109	.140	.736	-.367	200	471	.087	.116	.515	-.292	200	615	-.116	.113	.270	-.516
200	422	.225	.161	.934	-.221	200	472	-.055	.105	.260	-.422	200	616	-.123	.121	.293	-.592
200	423	.236	.181	.911	-.262	200	501	-.170	.149	.375	-.855	200	617	-.110	.125	.378	-.688
200	424	.232	.151	.977	-.221	200	502	-.159	.144	.388	-.687	200	618	-.102	.104	.258	-.408
200	425	.186	.162	.886	-.432	200	503	-.166	.147	.291	-.799	200	619	-.111	.100	.209	-.490
200	426	.077	.146	.816	-.390	200	504	-.156	.142	.311	-.658	200	620	-.124	.114	.225	-.636
200	427	.011	.164	.933	-.522	200	505	-.160	.137	.240	-.778	200	621	-.108	.114	.275	-.484
200	428	.019	.131	.565	-.399	200	506	-.150	.139	.293	-.832	200	622	-.112	.113	.232	-.672
200	429	.098	.148	.755	-.358	200	507	-.147	.132	.311	-.771	200	623	-.113	.106	.220	-.490
200	430	.163	.143	.778	-.243	200	508	-.139	.132	.272	-.633	200	624	-.121	.112	.227	-.516
200	431	.200	.136	.690	-.295	200	509	-.158	.144	.219	-.904	200	625	-.111	.112	.219	-.613
200	432	.196	.147	.860	-.224	200	510	-.147	.131	.301	-.830	200	626	-.127	.108	.230	-.573
200	433	.157	.144	.719	-.284	200	511	-.139	.135	.293	-1.024	200	627	-.134	.115	.246	-.615
200	434	.083	.142	.702	-.455	200	512	-.136	.134	.289	-.815	200	628	-.123	.106	.170	-.475
200	435	-.014	.144	.543	-.507	200	513	-.152	.146	.269	-1.051	200	629	-.126	.117	.249	-.533
200	436	.002	.125	.458	-.451	200	514	-.146	.129	.256	-.817	200	630	-.122	.111	.284	-.472
200	437	.051	.133	.634	-.405	200	515	-.124	.130	.353	-.825	200	631	-.117	.107	.232	-.533
200	438	.118	.135	.624	-.324	200	516	-.130	.123	.212	-.656	200	632	-.123	.111	.183	-.502
200	439	.158	.136	.694	-.328	200	517	-.143	.140	.323	-.886	200	633	-.110	.113	.242	-.537
200	440	.173	.150	.895	-.251	200	518	-.160	.137	.272	-.752	200	634	-.120	.103	.300	-.514
200	441	.124	.132	.714	-.260	200	519	-.141	.130	.242	-.879	200	801	-.110	.118	.303	-.573
200	442	.047	.126	.529	-.343	200	520	-.139	.122	.283	-1.079	200	802	-.144	.121	.241	-.705
200	443	-.033	.132	.438	-.619	200	521	-.189	.139	.220	-.983	200	803	-.112	.110	.235	-.477
200	444	-.049	.116	.348	-.446	200	522	-.175	.139	.245	-.914	200	804	-.121	.107	.225	-.526
200	445	.011	.111	.471	-.387	200	523	-.163	.128	.204	-.631	200	805	-.109	.113	.275	-.618
200	446	.067	.114	.419	-.296	200	524	-.172	.129	.274	-.694	200	806	-.117	.103	.263	-.469
200	447	.090	.116	.483	-.264	200	525	-.145	.138	.271	-.836	200	807	-.133	.110	.216	-.460
200	448	.104	.119	.579	-.314	200	526	-.167	.126	.267	-.879	200	808	-.136	.105	.208	-.455
200	449	.074	.121	.530	-.286	200	527	-.181	.132	.180	-.768	200	809	-.127	.112	.246	-.637
200	450	.017	.124	.520	-.365	200	528	-.184	.143	.344	-.804	200	810	-.140	.113	.251	-.578
200	451	-.052	.123	.564	-.501	200	529	-.180	.139	.267	-.792	200	811	-.193	.124	.176	-.719
200	452	-.081	.117	.261	-.559	200	530	-.184	.125	.227	-.560	200	812	-.161	.131	.242	-.797
200	453	-.064	.120	.311	-.473	200	531	-.181	.120	.181	-.584	200	813	-.116	.123	.298	-.580
200	454	-.015	.109	.331	-.442	200	532	-.185	.136	.283	-.776	200	814	-.223	.144	.242	-.858
200	455	.077	.116	.519	-.297	200	533	-.190	.141	.319	-.654	200	815	-.198	.138	.246	-.726
200	456	.101	.114	.584	-.259	200	534	-.224	.146	.358	-.813	200	901	-.161	.146	.389	-.781
200	457	.049	.108	.390	-.296	200	601	-.157	.142	.277	-.858	200	902	-.455	.282	.311	-1.534
200	458	-.001	.105	.365	-.334	200	602	-.151	.144	.374	-1.040	200	903	-.174	.170	.352	-.901
200	459	-.060	.122	.367	-.489	200	603	-.148	.142	.295	-.823	200	904	-.107	.141	.364	-.696
200	460	.020	.125	.499	-.434	200	604	-.171	.139	.227	-1.313	200	905	-.061	.216	.899	-.800
200	461	.081	.111	.477	-.310	200	605	-.160	.127	.222	-.836	200	906	-.156	.137	.260	-.696
200	462	.109	.114	.568	-.283	200	606	-.151	.126	.288	-.787	200	907	-.324	.201	.279	-1.379
200	463	.078	.112	.492	-.273	200	607	-.145	.128	.319	-.858	200	908	-.173	.139	.310	-.666

WD	TAP	CPMEAN	CPRMS	CPMAX	CPMIN	WD	TAP	CPMEAN	CPRMS	CPMAX	CPMIN	WD	TAP	CPMEAN	CPRMS	CPMAX	CPMIN
200	909	-.093	.137	.369	-.510	200	1212	-.132	.086	.153	-.492	200	1403	-.241	.136	.160	-.721
200	910	-.152	.138	.245	-.644	200	1213	-.118	.095	.189	-.429	200	1404	-.162	.113	.256	-.627
200	911	-.267	.176	.274	-1.108	200	1214	.075	.118	.518	-.312	200	1405	-.156	.118	.255	-.592
200	912	-.205	.165	.298	-1.065	200	1215	-.137	.101	.248	-.447	200	1406	-.200	.125	.140	-.871
200	913	-.110	.136	.447	-.667	200	1216	-.135	.098	.219	-.472	200	1407	-.176	.124	.185	-.625
200	914	-.143	.144	.382	-.722	200	1217	-.097	.090	.181	-.409	200	1408	-.132	.111	.180	-.537
200	915	-.189	.169	.357	-1.128	200	1218	-.095	.096	.192	-.411	200	1409	-.112	.112	.266	-.609
200	916	-.088	.132	.442	-.554	200	1219	-.091	.094	.168	-.409	200	1410	-.103	.105	.256	-.444
200	917	-.101	.138	.350	-.563	200	1220	-.101	.103	.221	-.438	200	1411	-.107	.103	.225	-.481
200	918	-.078	.134	.386	-.659	200	1221	-.135	.107	.207	-.506	200	1412	-.121	.113	.217	-.715
200	919	-.143	.160	.382	-.794	200	1222	-.088	.093	.237	-.368	200	1413	-.159	.118	.192	-.614
200	920	-.207	.194	.328	-1.501	200	1223	-.091	.096	.219	-.514	200	1414	-.111	.109	.246	-.487
200	921	-.177	.167	.340	-.883	200	1224	.097	.105	.553	-.210	200	1415	-.105	.103	.192	-.416
200	1101	-.185	.121	.167	-.624	200	1225	-.135	.108	.231	-.484	200	1416	-.093	.101	.253	-.521
200	1102	-.181	.122	.190	-.658	200	1226	-.088	.096	.203	-.369	200	1417	-.112	.095	.200	-.408
200	1103	-.171	.129	.201	-.613	200	1227	-.092	.092	.223	-.471	200	1418	-.162	.116	.178	-.542
200	1104	-.122	.099	.255	-.516	200	1228	-.090	.088	.245	-.356	200	1419	-.136	.116	.263	-.629
200	1105	-.109	.109	.216	-.511	200	1229	-.100	.100	.244	-.435	200	1420	-.192	.122	.148	-.653
200	1106	-.129	.106	.223	-.503	200	1301	-.003	.137	.565	-.502	200	1421	-.218	.131	.212	-.800
200	1107	-.107	.107	.179	-.491	200	1302	.034	.128	.555	-.440	200	1422	-.100	.103	.256	-.442
200	1108	-.112	.109	.227	-.504	200	1303	.036	.125	.597	-.380	200	1423	-.079	.106	.296	-.388
200	1109	-.113	.117	.309	-.509	200	1304	-.128	.109	.186	-.510	200	1424	-.083	.106	.309	-.487
200	1110	-.101	.100	.236	-.446	200	1305	.032	.121	.509	-.352	200	1425	-.103	.107	.225	-.498
200	1111	-.105	.105	.249	-.502	200	1306	-.020	.111	.410	-.380	200	1426	-.124	.107	.196	-.453
200	1112	-.105	.106	.190	-.437	200	1307	-.111	.107	.225	-.469	200	1427	-.066	.099	.225	-.411
200	1113	-.111	.111	.206	-.556	200	1308	-.138	.113	.232	-.586	200	1428	-.060	.107	.298	-.434
200	1114	-.106	.119	.240	-.577	200	1309	-.135	.113	.194	-.497	200	1429	-.045	.106	.291	-.382
200	1115	-.109	.112	.315	-.551	200	1311	.011	.122	.469	-.385	200	1430	-.046	.106	.298	-.393
200	1116	-.124	.123	.223	-.647	200	1312	.005	.111	.376	-.362	200	1431	-.084	.113	.301	-.610
200	1117	-.108	.102	.289	-.480	200	1313	-.055	.118	.289	-.459	200	1432	-.115	.107	.209	-.529
200	1118	-.120	.107	.225	-.484	200	1314	-.041	.110	.424	-.459	200	1433	-.125	.105	.191	-.525
200	1119	-.102	.106	.276	-.494	200	1315	-.147	.107	.229	-.549	200	1434	-.162	.123	.217	-.612
200	1120	-.102	.097	.211	-.525	200	1316	-.123	.108	.276	-.521	200	1435	-.165	.121	.225	-.804
200	1121	-.109	.099	.214	-.449	200	1317	.060	.103	.438	-.334	200	1901	-.117	.111	.255	-.579
200	1122	-.107	.103	.239	-.452	200	1318	-.053	.102	.268	-.424	200	1902	.017	.093	.301	-.325
200	1123	-.106	.109	.216	-.449	200	1319	.006	.107	.330	-.342	200	1903	.130	.091	.445	-.302
200	1124	-.116	.100	.284	-.438	200	1320	.068	.110	.467	-.262	200	1904	-.068	.100	.281	-.545
200	1125	-.101	.116	.252	-.582	200	1321	-.019	.118	.340	-.566	200	1905	-.034	.101	.291	-.479
200	1126	-.119	.120	.237	-.549	200	1322	-.162	.124	.191	-.567	200	1906	-.110	.110	.239	-.507
200	1201	-.179	.128	.124	-.674	200	1323	-.103	.106	.216	-.513	200	1907	-.101	.098	.225	-.390
200	1202	-.159	.130	.202	-.847	200	1324	.119	.111	.537	-.277	200	1908	-.109	.096	.199	-.471
200	1203	-.203	.136	.151	-.832	200	1325	.129	.129	.674	-.261	200	1909	-.108	.099	.210	-.450
200	1204	-.174	.132	.209	-.670	200	1326	.090	.120	.676	-.283	200	1910	-.111	.095	.247	-.433
200	1205	-.129	.132	.286	-.659	200	1327	.123	.136	.620	-.306	200	1911	-.102	.107	.273	-.559
200	1206	-.212	.157	.271	-1.041	200	1328	-.138	.124	.283	-.518	200	1912	-.099	.098	.198	-.564
200	1207	-.190	.135	.315	-.760	200	1329	-.112	.104	.211	-.479	200	1913	-.110	.096	.184	-.410
200	1208	-.099	.092	.254	-.405	200	1330	.001	.127	.579	-.584	200	1914	-.119	.108	.131	-.545
200	1209	-.123	.098	.207	-.413	200	1331	.038	.125	.641	-.343	200	1915	-.118	.098	.228	-.508
200	1210	-.104	.102	.260	-.430	200	1401	-.187	.127	.127	-.768	200	1916	-.114	.102	.253	-.527
200	1211	-.182	.098	.131	-.580	200	1402	-.216	.117	.148	-.789	200	1917	-.115	.096	.196	-.462

WD	TAP	CPMEAN	CPRMS	CPMAX	CPMIN	WD	TAP	CPMEAN	CPRMS	CPMAX	CPMIN	WD	TAP	CPMEAN	CPRMS	CPMAX	CPMIN
200	1918	-.115	.101	.259	-.428	200	1968	-.135	.106	.221	-.558	210	150	-.112	.112	.232	-.580
200	1919	-.121	.101	.201	-.533	210	101	-.171	.145	.362	-.738	210	151	-.104	.106	.260	-.532
200	1920	-.108	.099	.236	-.524	210	102	-.166	.145	.276	-.792	210	152	-.102	.106	.304	-.429
200	1921	-.124	.106	.198	-.533	210	103	-.209	.156	.356	-.862	210	153	-.142	.110	.249	-.464
200	1922	-.119	.104	.196	-.447	210	104	-.127	.147	.341	-1.006	210	154	-.126	.114	.294	-.610
200	1923	-.113	.107	.219	-.536	210	105	-.122	.139	.404	-.775	210	155	-.106	.113	.380	-.537
200	1924	-.104	.099	.161	-.461	210	106	-.128	.140	.449	-1.326	210	156	-.113	.113	.253	-.524
200	1925	-.142	.105	.212	-.498	210	107	-.123	.124	.257	-.655	210	157	-.108	.116	.282	-.472
200	1926	-.115	.087	.170	-.439	210	108	-.142	.133	.346	-.707	210	158	-.115	.107	.306	-.524
200	1927	-.130	.102	.244	-.484	210	109	-.130	.134	.331	-.710	210	159	-.122	.115	.252	-.473
200	1928	-.123	.103	.213	-.424	210	110	-.133	.131	.362	-.578	210	160	-.131	.115	.230	-.559
200	1929	-.112	.099	.188	-.526	210	111	-.119	.132	.297	-.561	210	161	-.139	.119	.228	-.669
200	1930	-.123	.107	.229	-.498	210	112	-.115	.127	.326	-.678	210	162	-.137	.108	.189	-.590
200	1931	-.102	.095	.154	-.390	210	113	-.126	.139	.287	-.894	210	163	-.135	.117	.211	-.529
200	1932	-.092	.082	.178	-.384	210	114	-.125	.123	.319	-.865	210	164	-.130	.114	.240	-.559
200	1933	-.132	.110	.209	-.622	210	115	-.122	.125	.257	-.651	210	165	-.112	.111	.233	-.450
200	1934	-.123	.107	.260	-.472	210	116	-.121	.122	.245	-.651	210	166	-.114	.117	.348	-.546
200	1935	-.114	.111	.285	-.571	210	117	-.111	.119	.287	-.548	210	167	-.116	.107	.291	-.418
200	1936	-.110	.099	.199	-.539	210	118	-.122	.115	.267	-.543	210	168	-.137	.119	.265	-.590
200	1937	-.121	.097	.179	-.444	210	119	-.107	.117	.282	-.528	210	169	-.143	.119	.220	-.601
200	1938	-.115	.106	.154	-.529	210	120	-.111	.126	.414	-.568	210	170	-.148	.118	.211	-.605
200	1939	-.117	.090	.227	-.435	210	121	-.104	.116	.266	-.443	210	171	-.150	.108	.225	-.512
200	1940	-.108	.115	.309	-.498	210	122	-.116	.131	.269	-.760	210	172	-.158	.109	.207	-.589
200	1941	-.110	.104	.207	-.511	210	123	-.113	.126	.309	-.581	210	173	-.182	.121	.166	-.940
200	1942	-.119	.106	.250	-.455	210	124	-.129	.119	.214	-.600	210	174	-.134	.104	.339	-.432
200	1943	-.130	.100	.206	-.523	210	125	-.120	.109	.282	-.526	210	175	-.123	.111	.223	-.539
200	1944	-.129	.093	.162	-.571	210	126	-.114	.117	.318	-.527	210	176	-.139	.107	.223	-.517
200	1945	-.112	.111	.285	-.514	210	127	-.117	.121	.279	-.492	210	177	-.105	.115	.296	-.573
200	1946	-.122	.107	.255	-.517	210	128	-.119	.113	.233	-.596	210	178	-.160	.105	.164	-.564
200	1947	-.144	.110	.179	-.568	210	129	-.104	.107	.262	-.413	210	179	-.181	.125	.294	-.608
200	1948	-.124	.105	.154	-.478	210	130	-.103	.116	.282	-.502	210	180	-.133	.111	.212	-.534
200	1949	-.146	.102	.200	-.479	210	131	-.098	.109	.272	-.473	210	181	-.128	.103	.251	-.476
200	1950	-.142	.090	.158	-.443	210	132	-.102	.122	.299	-.563	210	182	-.107	.102	.199	-.455
200	1951	-.157	.111	.194	-.610	210	133	-.104	.131	.287	-.573	210	183	-.169	.113	.172	-.564
200	1952	-.195	.153	.429	-.691	210	134	-.123	.124	.277	-.586	210	184	-.129	.104	.261	-.514
200	1953	-.216	.131	.184	-.795	210	135	-.112	.110	.296	-.433	210	185	-.126	.106	.302	-.471
200	1954	-.161	.116	.225	-.601	210	136	-.124	.117	.262	-.507	210	186	-.115	.112	.260	-.499
200	1955	-.132	.102	.147	-.459	210	137	-.115	.116	.203	-.512	210	187	-.191	.114	.162	-.580
200	1956	-.130	.096	.189	-.484	210	138	-.114	.114	.215	-.561	210	201	-.134	.143	.296	-.655
200	1957	-.166	.120	.183	-.654	210	139	-.110	.106	.297	-.443	210	202	-.210	.140	.305	-.805
200	1958	-.138	.101	.256	-.464	210	140	-.102	.115	.260	-.499	210	203	-.172	.135	.237	-.787
200	1959	-.133	.110	.268	-.552	210	141	-.095	.110	.253	-.520	210	204	-.150	.126	.268	-.791
200	1960	-.131	.099	.187	-.521	210	142	-.100	.109	.259	-.669	210	205	-.148	.139	.239	-.665
200	1961	-.148	.100	.163	-.473	210	143	-.105	.113	.299	-.423	210	206	-.150	.135	.263	-.682
200	1962	-.053	.123	.328	-.631	210	144	-.133	.113	.259	-.613	210	207	-.147	.152	.303	-.935
200	1963	-.055	.089	.223	-.314	210	145	-.112	.113	.248	-.531	210	208	-.150	.159	.311	-.833
200	1964	-.088	.108	.251	-.450	210	146	-.120	.107	.232	-.472	210	209	-.152	.161	.353	-.957
200	1965	-.153	.102	.164	-.488	210	147	-.114	.113	.274	-.505	210	210	-.166	.162	.318	-1.118
200	1966	-.148	.109	.249	-.533	210	148	-.102	.111	.259	-.483	210	211	-.152	.157	.310	-1.063
200	1967	-.136	.103	.203	-.512	210	149	-.113	.104	.233	-.465	210	212	-.134	.132	.248	-.729

WD	TAP	CPMEAN	CPRMS	CPMAX	CPMIN	WD	TAP	CPMEAN	CPRMS	CPMAX	CPMIN	WD	TAP	CPMEAN	CPRMS	CPMAX	CPMIN
210	213	-.143	.148	.330	-.903	210	263	-.161	.116	.208	-.658	210	341	-.209	.126	.141	-.717
210	214	-.170	.140	.330	-.751	210	264	-.147	.111	.283	-.540	210	342	-.205	.134	.259	-.768
210	215	-.140	.138	.234	-.861	210	265	-.157	.113	.174	-.588	210	343	-.154	.139	.350	-.640
210	216	-.138	.130	.222	-.749	210	266	-.170	.119	.174	-.646	210	344	-.114	.102	.241	-.455
210	217	-.137	.139	.318	-.954	210	267	-.147	.115	.255	-.555	210	345	-.140	.114	.197	-.561
210	218	-.153	.157	.375	-1.611	210	268	-.136	.114	.227	-.527	210	346	-.206	.143	.282	-.753
210	219	-.148	.149	.256	-1.236	210	269	-.139	.113	.263	-.516	210	347	-.182	.127	.213	-.632
210	220	-.122	.129	.347	-.739	210	270	-.132	.108	.220	-.583	210	348	-.176	.122	.197	-.654
210	221	-.117	.139	.367	-.635	210	271	-.133	.112	.194	-.611	210	349	-.159	.125	.268	-.651
210	222	-.119	.127	.308	-.579	210	272	-.150	.114	.216	-.585	210	350	-.096	.115	.276	-.473
210	223	-.128	.122	.251	-.542	210	301	.017	.332	1.215	-1.281	210	351	-.101	.110	.237	-.494
210	224	-.137	.128	.264	-.663	210	302	.027	.207	.870	-.644	210	352	-.200	.133	.180	-.685
210	225	-.142	.119	.271	-.618	210	303	-.078	.187	.721	-.792	210	353	-.142	.114	.320	-.549
210	226	-.140	.138	.357	-.808	210	304	-.415	.239	.244	-1.371	210	354	-.138	.122	.271	-.532
210	227	-.144	.124	.249	-.623	210	305	-.227	.171	.272	-1.022	210	355	-.181	.123	.197	-.661
210	228	-.121	.123	.271	-.715	210	306	-.182	.144	.239	-.802	210	356	-.111	.136	.344	-.595
210	229	-.107	.127	.441	-.707	210	307	.024	.284	1.025	-1.243	210	357	-.165	.115	.220	-.605
210	230	-.121	.125	.254	-.660	210	308	.053	.199	.906	-.698	210	358	-.117	.116	.298	-.540
210	231	-.122	.121	.246	-.551	210	309	-.125	.169	.470	-.847	210	401	-.254	.180	.381	-1.210
210	232	-.127	.116	.330	-.586	210	310	-.354	.234	.199	-1.523	210	402	-.208	.242	.571	-1.276
210	233	-.123	.122	.274	-.606	210	311	-.267	.197	.321	-1.114	210	403	.298	.235	1.175	-.860
210	234	-.126	.121	.266	-.618	210	312	-.211	.155	.243	-1.051	210	404	.058	.170	.759	-.461
210	235	-.152	.131	.216	-.729	210	313	-.089	.273	.796	-1.189	210	405	.145	.202	.978	-.402
210	236	-.119	.117	.219	-.574	210	314	-.006	.204	.731	-.960	210	406	.137	.183	.813	-.413
210	237	-.124	.126	.273	-.774	210	315	-.153	.164	.432	-.883	210	407	.148	.176	.812	-.427
210	238	-.137	.120	.320	-1.179	210	316	-.275	.183	.168	-1.266	210	408	.170	.197	.970	-.355
210	239	-.134	.119	.237	-.756	210	317	-.271	.206	.280	-1.097	210	409	.179	.197	.933	-.466
210	240	-.133	.118	.221	-.566	210	318	-.206	.162	.400	-1.154	210	410	.248	.211	1.156	-.461
210	241	-.139	.112	.248	-.624	210	319	-.207	.227	.582	-1.296	210	411	.232	.227	1.319	-.514
210	242	-.142	.122	.276	-.524	210	320	-.090	.173	.502	-1.047	210	412	.091	.161	.887	-.420
210	243	-.149	.130	.313	-.682	210	321	-.158	.150	.410	-.805	210	413	.175	.171	.903	-.355
210	244	-.151	.123	.276	-.599	210	322	-.228	.178	.198	-1.129	210	414	.274	.185	1.002	-.331
210	245	-.140	.119	.256	-.551	210	323	-.220	.173	.295	-1.102	210	415	.299	.189	1.070	-.224
210	246	-.173	.099	.159	-.580	210	324	-.189	.149	.335	-.925	210	416	.313	.172	1.087	-.208
210	247	-.185	.119	.197	-.722	210	325	-.189	.172	.423	-1.056	210	417	.320	.177	1.172	-.151
210	248	-.177	.115	.175	-.588	210	326	-.099	.141	.300	-.696	210	418	.256	.189	1.069	-.256
210	249	-.170	.114	.185	-.714	210	327	-.128	.130	.291	-.578	210	419	.176	.207	1.131	-.415
210	250	-.168	.116	.260	-.633	210	328	-.201	.159	.201	-1.283	210	420	.021	.132	.590	-.400
210	251	-.176	.115	.235	-.554	210	329	-.205	.133	.198	-.645	210	421	.103	.146	.655	-.366
210	252	-.176	.122	.217	-.578	210	330	-.177	.137	.298	-.845	210	422	.210	.143	.717	-.193
210	253	-.183	.127	.232	-.616	210	331	-.182	.146	.376	-.700	210	423	.247	.148	.766	-.161
210	254	-.170	.119	.194	-.705	210	332	-.119	.124	.234	-.755	210	424	.277	.152	.924	-.161
210	255	-.179	.116	.184	-.614	210	333	-.156	.123	.209	-.613	210	425	.259	.163	.939	-.183
210	256	-.160	.111	.221	-.604	210	334	-.197	.078	.027	-.460	210	426	.180	.161	1.005	-.267
210	257	-.147	.109	.156	-.548	210	335	-.202	.127	.263	-.701	210	427	.071	.177	.801	-.479
210	258	-.141	.114	.201	-.813	210	336	-.182	.129	.229	-.706	210	428	-.010	.121	.385	-.393
210	259	-.140	.116	.303	-.621	210	337	-.161	.138	.261	-.902	210	429	.054	.121	.600	-.306
210	260	-.166	.119	.251	-.631	210	338	-.113	.120	.366	-.569	210	430	.133	.136	.632	-.303
210	261	-.158	.107	.220	-.689	210	339	-.150	.112	.301	-.544	210	431	.181	.131	.706	-.296
210	262	-.156	.118	.199	-.694	210	340	-.232	.143	.236	-.775	210	432	.199	.130	.706	-.227

WD	TAP	CPMEAN	CPRMS	CPMAX	CPMIN	WD	TAP	CPMEAN	CPRMS	CPMAX	CPMIN	WD	TAP	CPMEAN	CPRMS	CPMAX	CPMIN
210	433	.170	.135	.788	-.267	210	511	-.138	.123	.259	-1.031	210	627	-.153	.109	.195	-.570
210	434	.118	.137	.622	-.314	210	512	-.143	.133	.264	-.993	210	628	-.129	.096	.209	-.465
210	435	.040	.145	.731	-.447	210	513	-.154	.126	.230	-1.127	210	629	-.152	.111	.265	-.474
210	436	-.041	.111	.348	-.486	210	514	-.149	.124	.228	-.650	210	630	-.141	.107	.209	-.484
210	437	.015	.126	.460	-.407	210	515	-.141	.115	.245	-.809	210	631	-.138	.113	.261	-.504
210	438	.080	.117	.487	-.343	210	516	-.128	.124	.265	-.645	210	632	-.133	.107	.272	-.458
210	439	.128	.122	.627	-.304	210	517	-.173	.129	.245	-.772	210	633	-.130	.101	.239	-.459
210	440	.151	.126	.612	-.257	210	518	-.161	.117	.235	-.552	210	634	-.136	.109	.252	-.532
210	441	.135	.137	.650	-.340	210	519	-.152	.117	.225	-.685	210	801	-.124	.111	.308	-.522
210	442	.058	.133	.548	-.356	210	520	-.144	.127	.255	-.704	210	802	-.172	.130	.229	-.746
210	443	-.012	.129	.477	-.455	210	521	-.205	.141	.192	-.812	210	803	-.131	.104	.261	-.575
210	444	-.067	.108	.355	-.450	210	522	-.191	.127	.213	-.695	210	804	-.134	.109	.206	-.507
210	445	-.016	.105	.320	-.421	210	523	-.183	.123	.258	-.640	210	805	-.133	.106	.313	-.505
210	446	.046	.111	.421	-.273	210	524	-.182	.121	.227	-.704	210	806	-.140	.111	.193	-.566
210	447	.080	.104	.548	-.236	210	525	-.158	.119	.267	-.579	210	807	-.153	.111	.186	-.543
210	448	.100	.114	.533	-.264	210	526	-.186	.139	.247	-1.149	210	808	-.154	.107	.234	-.571
210	449	.089	.120	.533	-.266	210	527	-.204	.126	.227	-.769	210	809	-.141	.107	.214	-.562
210	450	.037	.120	.409	-.403	210	528	-.201	.126	.172	-.700	210	810	-.163	.116	.211	-.509
210	451	-.029	.120	.357	-.447	210	529	-.210	.132	.230	-.830	210	811	-.215	.120	.120	-.722
210	452	-.101	.107	.245	-.442	210	530	-.212	.119	.209	-.660	210	812	-.192	.120	.188	-.623
210	453	-.078	.109	.294	-.515	210	531	-.203	.122	.213	-.554	210	813	-.140	.115	.181	-.542
210	454	-.027	.112	.230	-.385	210	532	-.211	.121	.187	-.683	210	814	-.231	.137	.152	-.817
210	455	.065	.106	.367	-.305	210	533	-.213	.125	.273	-.686	210	815	-.228	.124	.188	-.657
210	456	.098	.108	.454	-.253	210	534	-.227	.129	.162	-.782	210	901	-.164	.157	.344	-1.032
210	457	.066	.108	.421	-.296	210	601	-.154	.139	.310	-.733	210	902	-.582	.328	.331	-2.073
210	458	.009	.105	.380	-.345	210	602	-.153	.144	.376	-.789	210	903	-.211	.169	.271	-.887
210	459	-.049	.114	.327	-.463	210	603	-.147	.135	.253	-.718	210	904	-.096	.125	.312	-.683
210	460	-.003	.108	.358	-.378	210	604	-.165	.137	.265	-.815	210	905	-.057	.224	.810	-.969
210	461	.078	.109	.465	-.295	210	605	-.156	.129	.268	-.590	210	906	-.158	.132	.352	-.765
210	462	.093	.115	.495	-.285	210	606	-.146	.129	.306	-.774	210	907	-.407	.220	.172	-1.447
210	463	.080	.113	.437	-.332	210	607	-.151	.128	.255	-.779	210	908	-.181	.145	.296	-.844
210	464	.003	.106	.411	-.428	210	608	-.144	.121	.218	-.616	210	909	-.116	.146	.479	-.660
210	465	-.058	.113	.346	-.386	210	609	-.137	.118	.232	-.652	210	910	-.170	.130	.254	-.678
210	466	.090	.108	.542	-.254	210	610	-.114	.111	.322	-.537	210	911	-.270	.178	.304	-1.209
210	467	.124	.105	.517	-.211	210	611	-.120	.113	.242	-.512	210	912	-.209	.166	.379	-1.002
210	468	.147	.125	.649	-.207	210	612	-.136	.115	.242	-.639	210	913	-.131	.137	.377	-.732
210	469	.132	.113	.500	-.294	210	613	-.118	.114	.285	-.573	210	914	-.180	.142	.272	-.735
210	470	.098	.112	.563	-.274	210	614	-.118	.104	.241	-.492	210	915	-.204	.171	.433	-1.021
210	471	.091	.111	.460	-.270	210	615	-.124	.108	.236	-.543	210	916	-.102	.138	.381	-.605
210	472	-.065	.094	.234	-.391	210	616	-.134	.112	.224	-.500	210	917	-.129	.142	.356	-.687
210	501	-.171	.152	.315	-.898	210	617	-.134	.104	.244	-.477	210	918	-.102	.146	.423	-.651
210	502	-.179	.148	.353	-.786	210	618	-.116	.100	.226	-.527	210	919	-.170	.162	.409	-.929
210	503	-.178	.143	.286	-.724	210	619	-.123	.105	.241	-.497	210	920	-.201	.169	.301	-.882
210	504	-.166	.160	.294	-.988	210	620	-.132	.106	.211	-.525	210	921	-.198	.159	.274	-.899
210	505	-.173	.141	.339	-1.048	210	621	-.137	.108	.295	-.590	210	1101	-.191	.109	.139	-.605
210	506	-.172	.153	.359	-.883	210	622	-.138	.107	.244	-.505	210	1102	-.216	.118	.170	-.607
210	507	-.157	.147	.284	-.906	210	623	-.137	.105	.209	-.505	210	1103	-.184	.122	.206	-.625
210	508	-.161	.132	.243	-.772	210	624	-.143	.098	.178	-.504	210	1104	-.128	.091	.122	-.447
210	509	-.153	.148	.304	-1.081	210	625	-.129	.103	.225	-.576	210	1105	-.125	.101	.218	-.477
210	510	-.141	.122	.188	-.600	210	626	-.151	.114	.203	-.642	210	1106	-.167	.106	.168	-.501

WD	TAP	CPMEAN	CPRMS	CPMAX	CPMIN	WD	TAP	CPMEAN	CPRMS	CPMAX	CPMIN	WD	TAP	CPMEAN	CPRMS	CPMAX	CPMIN
210	1107	-.134	.109	.251	-.477	210	1302	.016	.138	.435	-.484	210	1422	-.114	.102	.254	-.458
210	1108	-.125	.108	.200	-.491	210	1303	.028	.135	.590	-.501	210	1423	-.099	.109	.280	-.557
210	1109	-.136	.112	.200	-.463	210	1304	-.160	.110	.230	-.513	210	1424	-.095	.105	.247	-.465
210	1110	-.124	.110	.183	-.467	210	1305	.015	.119	.463	-.405	210	1425	-.127	.106	.192	-.598
210	1111	-.117	.099	.230	-.455	210	1306	-.039	.110	.311	-.430	210	1426	-.146	.111	.218	-.512
210	1112	-.121	.112	.302	-.531	210	1307	-.137	.111	.210	-.533	210	1427	-.083	.103	.236	-.468
210	1113	-.128	.097	.195	-.475	210	1308	-.177	.114	.189	-.539	210	1428	-.070	.101	.247	-.434
210	1114	-.133	.107	.236	-.536	210	1309	-.157	.116	.286	-.566	210	1429	-.062	.101	.326	-.395
210	1115	-.136	.103	.198	-.563	210	1311	.004	.117	.426	-.360	210	1430	-.080	.099	.252	-.424
210	1116	-.154	.108	.213	-.515	210	1312	.001	.107	.531	-.348	210	1431	-.119	.109	.249	-.515
210	1117	-.126	.101	.205	-.463	210	1313	-.083	.112	.343	-.446	210	1432	-.135	.104	.280	-.575
210	1118	-.157	.105	.195	-.500	210	1314	-.076	.105	.273	-.405	210	1433	-.155	.109	.215	-.496
210	1119	-.119	.109	.264	-.568	210	1315	-.164	.109	.203	-.550	210	1434	-.186	.111	.262	-.702
210	1120	-.114	.104	.314	-.447	210	1316	-.139	.109	.248	-.501	210	1435	-.194	.118	.156	-.693
210	1121	-.130	.100	.216	-.470	210	1317	.060	.109	.563	-.277	210	1901	-.132	.103	.177	-.565
210	1122	-.127	.102	.220	-.461	210	1318	-.068	.103	.244	-.370	210	1902	.001	.097	.253	-.484
210	1123	-.115	.106	.251	-.436	210	1319	.007	.103	.349	-.357	210	1903	.111	.088	.409	-.236
210	1124	-.124	.096	.150	-.508	210	1320	.066	.100	.535	-.318	210	1904	-.081	.099	.220	-.505
210	1125	-.121	.108	.240	-.531	210	1321	-.065	.110	.349	-.456	210	1905	-.051	.101	.240	-.410
210	1126	-.145	.111	.245	-.561	210	1322	-.184	.107	.223	-.499	210	1906	-.105	.103	.235	-.416
210	1201	-.208	.119	.119	-.738	210	1323	-.135	.108	.254	-.513	210	1907	-.121	.092	.149	-.607
210	1202	-.202	.135	.226	-.784	210	1324	.131	.115	.726	-.264	210	1908	-.127	.100	.184	-.414
210	1203	-.237	.128	.170	-.805	210	1325	.121	.124	.590	-.279	210	1909	-.113	.098	.241	-.414
210	1204	-.213	.113	.158	-.588	210	1326	.097	.104	.472	-.235	210	1910	-.135	.100	.234	-.557
210	1205	-.179	.136	.274	-.765	210	1327	.114	.124	.555	-.310	210	1911	-.115	.093	.195	-.393
210	1206	-.260	.150	.220	-.936	210	1328	-.181	.119	.223	-.607	210	1912	-.116	.095	.192	-.475
210	1207	-.222	.133	.171	-.986	210	1329	-.134	.097	.195	-.468	210	1913	-.119	.092	.241	-.466
210	1208	-.118	.098	.199	-.429	210	1330	-.014	.125	.352	-.398	210	1914	-.126	.097	.163	-.437
210	1209	-.141	.103	.233	-.544	210	1331	.030	.123	.428	-.368	210	1915	-.116	.090	.226	-.420
210	1210	-.118	.098	.207	-.476	210	1401	-.200	.107	.120	-.638	210	1916	-.122	.090	.143	-.426
210	1211	-.182	.097	.188	-.544	210	1402	-.216	.109	.131	-.703	210	1917	-.129	.091	.175	-.423
210	1212	-.135	.095	.180	-.498	210	1403	-.249	.121	.147	-.734	210	1918	-.131	.089	.160	-.493
210	1213	-.136	.098	.227	-.483	210	1404	-.174	.116	.200	-.617	210	1919	-.127	.092	.198	-.405
210	1214	.075	.116	.566	-.344	210	1405	-.176	.117	.261	-.702	210	1920	-.109	.091	.169	-.532
210	1215	-.154	.105	.213	-.583	210	1406	-.225	.114	.122	-.693	210	1921	-.123	.099	.219	-.449
210	1216	-.135	.094	.162	-.474	210	1407	-.188	.123	.226	-.680	210	1922	-.131	.100	.189	-.464
210	1217	-.115	.089	.141	-.461	210	1408	-.157	.110	.200	-.594	210	1923	-.125	.092	.205	-.423
210	1218	-.110	.100	.196	-.400	210	1409	-.127	.100	.179	-.416	210	1924	-.116	.090	.181	-.459
210	1219	-.109	.096	.198	-.477	210	1410	-.122	.102	.220	-.433	210	1925	-.152	.090	.172	-.497
210	1220	-.113	.098	.191	-.415	210	1411	-.136	.099	.228	-.489	210	1926	-.127	.097	.134	-.445
210	1221	-.150	.104	.164	-.492	210	1412	-.152	.106	.226	-.536	210	1927	-.137	.101	.158	-.502
210	1222	-.112	.096	.224	-.392	210	1413	-.178	.110	.239	-.607	210	1928	-.129	.101	.166	-.527
210	1223	-.113	.091	.203	-.457	210	1414	-.124	.097	.179	-.478	210	1929	-.124	.103	.175	-.520
210	1224	.096	.105	.465	-.243	210	1415	-.126	.103	.270	-.492	210	1930	-.116	.104	.244	-.445
210	1225	-.147	.100	.185	-.495	210	1416	-.121	.103	.210	-.504	210	1931	-.121	.089	.148	-.573
210	1226	-.109	.096	.292	-.425	210	1417	-.142	.099	.165	-.479	210	1932	-.112	.088	.168	-.375
210	1227	-.110	.096	.180	-.461	210	1418	-.191	.119	.192	-.621	210	1933	-.130	.108	.235	-.517
210	1228	-.111	.099	.201	-.425	210	1419	-.163	.118	.256	-.538	210	1934	-.135	.108	.283	-.541
210	1229	-.116	.103	.229	-.524	210	1420	-.224	.125	.193	-.736	210	1935	-.122	.095	.196	-.445
210	1301	-.032	.133	.430	-.495	210	1421	-.260	.136	.100	-.855	210	1936	-.125	.096	.192	-.454

WD	TAP	CPMEAN	CPRMS	CPMAX	CPMIN	WD	TAP	CPMEAN	CPRMS	CPMAX	CPMIN	WD	TAP	CPMEAN	CPRMS	CPMAX	CPMIN
210	1937	-.128	.092	.233	-.448	220	119	-.117	.122	.294	-.555	220	169	-.126	.119	.239	-.556
210	1938	-.123	.100	.189	-.467	220	120	-.109	.131	.306	-.550	220	170	-.121	.118	.249	-.554
210	1939	-.116	.086	.198	-.425	220	121	-.108	.122	.266	-.519	220	171	-.140	.121	.247	-.518
210	1940	-.117	.102	.209	-.456	220	122	-.100	.119	.335	-.566	220	172	-.165	.120	.242	-.672
210	1941	-.118	.098	.187	-.444	220	123	-.124	.128	.275	-.663	220	173	-.201	.130	.185	-.747
210	1942	-.134	.092	.166	-.462	220	124	-.129	.123	.258	-.638	220	174	-.095	.102	.241	-.484
210	1943	-.138	.091	.158	-.406	220	125	-.123	.118	.227	-.629	220	175	-.101	.114	.246	-.435
210	1944	-.132	.082	.092	-.462	220	126	-.122	.116	.343	-.566	220	176	-.100	.112	.291	-.514
210	1945	-.119	.106	.231	-.480	220	127	-.117	.113	.273	-.507	220	177	-.085	.103	.290	-.403
210	1946	-.146	.110	.248	-.570	220	128	-.122	.110	.246	-.516	220	178	-.123	.109	.233	-.514
210	1947	-.153	.100	.175	-.546	220	129	-.111	.111	.272	-.587	220	179	-.143	.122	.277	-.574
210	1948	-.137	.094	.168	-.503	220	130	-.110	.105	.315	-.469	220	180	-.095	.111	.287	-.476
210	1949	-.153	.086	.158	-.491	220	131	-.107	.117	.363	-.492	220	181	-.087	.107	.207	-.514
210	1950	-.149	.099	.111	-.483	220	132	-.106	.124	.260	-.630	220	182	-.089	.099	.316	-.455
210	1951	-.180	.108	.154	-.577	220	133	-.115	.130	.318	-.646	220	183	-.143	.119	.323	-.560
210	1952	-.219	.145	.246	-1.028	220	134	-.147	.129	.235	-.613	220	184	-.091	.106	.259	-.421
210	1953	-.235	.124	.095	-.680	220	135	-.135	.114	.282	-.531	220	185	-.094	.111	.238	-.445
210	1954	-.149	.110	.201	-.553	220	136	-.131	.122	.275	-.554	220	186	-.082	.106	.295	-.489
210	1955	-.152	.094	.105	-.588	220	137	-.113	.112	.322	-.502	220	187	-.159	.108	.205	-.592
210	1956	-.149	.099	.161	-.444	220	138	-.121	.115	.228	-.481	220	201	-.109	.130	.344	-.788
210	1957	-.161	.107	.259	-.547	220	139	-.109	.107	.299	-.459	220	202	-.200	.148	.280	-.887
210	1958	-.156	.101	.228	-.594	220	140	-.116	.116	.318	-.528	220	203	-.167	.143	.335	-.693
210	1959	-.142	.092	.175	-.409	220	141	-.119	.119	.216	-.516	220	204	-.120	.131	.413	-.739
210	1960	-.148	.094	.154	-.447	220	142	-.123	.114	.266	-.677	220	205	-.118	.123	.364	-.569
210	1961	-.155	.092	.172	-.464	220	143	-.142	.121	.331	-.583	220	206	-.138	.138	.370	-.676
210	1962	-.060	.109	.313	-.454	220	144	-.160	.117	.206	-.568	220	207	-.127	.144	.320	-.757
210	1963	-.066	.088	.231	-.395	220	145	-.147	.114	.196	-.566	220	208	-.133	.152	.442	-.727
210	1964	-.102	.096	.208	-.448	220	146	-.144	.112	.306	-.474	220	209	-.147	.180	.411	-1.239
210	1965	-.165	.097	.151	-.524	220	147	-.137	.120	.291	-.514	220	210	-.133	.158	.304	-1.010
210	1966	-.156	.093	.139	-.479	220	148	-.131	.111	.289	-.497	220	211	-.128	.149	.311	-.951
210	1967	-.144	.092	.167	-.409	220	149	-.128	.108	.270	-.492	220	212	-.111	.129	.301	-.564
210	1968	-.140	.094	.119	-.529	220	150	-.124	.119	.260	-.564	220	213	-.107	.124	.261	-.557
220	101	-.169	.162	.361	-.786	220	151	-.130	.126	.263	-.711	220	214	-.149	.131	.242	-.650
220	102	-.174	.149	.313	-.997	220	152	-.147	.124	.317	-.649	220	215	-.132	.137	.254	-.622
220	103	-.213	.164	.414	-.881	220	153	-.202	.137	.209	-.696	220	216	-.128	.138	.259	-.772
220	104	-.116	.159	.361	-.814	220	154	-.109	.127	.306	-.557	220	217	-.129	.135	.359	-.603
220	105	-.123	.164	.414	-.812	220	155	-.118	.118	.273	-.497	220	218	-.123	.143	.301	-.975
220	106	-.139	.177	.503	-1.102	220	156	-.107	.114	.272	-.523	220	219	-.146	.153	.265	-.886
220	107	-.144	.156	.344	-1.100	220	157	-.106	.123	.320	-.682	220	220	-.120	.123	.275	-.641
220	108	-.136	.146	.290	-1.038	220	158	-.128	.114	.306	-.502	220	221	-.124	.127	.304	-.671
220	109	-.148	.139	.323	-.768	220	159	-.138	.114	.289	-.570	220	222	-.115	.120	.268	-.483
220	110	-.133	.134	.280	-.617	220	160	-.152	.117	.273	-.573	220	223	-.135	.115	.211	-.645
220	111	-.120	.140	.318	-.591	220	161	-.175	.119	.232	-.563	220	224	-.132	.129	.270	-.591
220	112	-.116	.134	.328	-.538	220	162	-.194	.134	.202	-.599	220	225	-.141	.132	.258	-.640
220	113	-.122	.139	.419	-.687	220	163	-.211	.135	.211	-.750	220	226	-.150	.139	.302	-.784
220	114	-.125	.135	.285	-.651	220	164	-.101	.130	.270	-.969	220	227	-.143	.125	.358	-.590
220	115	-.122	.128	.273	-.696	220	165	-.085	.116	.334	-.490	220	228	-.143	.128	.246	-.560
220	116	-.122	.134	.280	-.646	220	166	-.083	.122	.303	-.557	220	229	-.151	.123	.266	-.602
220	117	-.124	.128	.273	-.703	220	167	-.095	.119	.270	-.457	220	230	-.149	.120	.263	-.571
220	118	-.122	.123	.263	-.552	220	168	-.092	.111	.266	-.452	220	231	-.165	.125	.263	-.576

WD	TAP	CPMEAN	CPRMS	CPMAX	CPMIN
220	232	-.164	.126	.325	-.591
220	233	-.139	.118	.318	-.638
220	234	-.148	.120	.209	-.505
220	235	-.150	.122	.318	-.567
220	236	-.183	.138	.228	-.805
220	237	-.191	.134	.218	-.765
220	238	-.185	.132	.165	-.905
220	239	-.196	.126	.227	-.901
220	240	-.172	.131	.256	-.679
220	241	-.152	.130	.247	-.576
220	242	-.128	.116	.234	-.519
220	243	-.149	.124	.201	-.707
220	244	-.187	.133	.208	-.714
220	245	-.187	.139	.235	-.724
220	246	-.200	.122	.141	-.741
220	247	-.203	.129	.275	-.808
220	248	-.159	.118	.270	-.564
220	249	-.123	.122	.293	-.566
220	250	-.120	.118	.254	-.569
220	251	-.138	.117	.241	-.708
220	252	-.182	.114	.192	-.643
220	253	-.168	.126	.203	-.620
220	254	-.142	.116	.207	-.565
220	255	-.139	.121	.292	-.529
220	256	-.118	.120	.285	-.567
220	257	-.091	.124	.365	-.485
220	258	-.092	.109	.294	-.536
220	259	-.096	.117	.263	-.607
220	260	-.161	.124	.228	-.780
220	261	-.133	.111	.260	-.533
220	262	-.133	.102	.224	-.494
220	263	-.120	.105	.197	-.439
220	264	-.111	.110	.285	-.448
220	265	-.101	.103	.233	-.527
220	266	-.134	.107	.251	-.551
220	267	-.129	.112	.211	-.689
220	268	-.116	.104	.215	-.491
220	269	-.101	.105	.220	-.504
220	270	-.094	.114	.260	-.617
220	271	-.085	.109	.274	-.421
220	272	-.114	.118	.221	-.574
220	301	-.186	.312	.801	-1.441
220	302	-.025	.175	.906	-.754
220	303	-.114	.154	.513	-.686
220	304	-.291	.185	.244	-1.368
220	305	-.231	.173	.277	-1.109
220	306	-.188	.154	.268	-.742
220	307	-.206	.284	.647	-1.362
220	308	-.010	.173	.643	-.873
220	309	-.110	.142	.485	-.690
220	310	-.207	.154	.263	-.977
220	311	-.206	.155	.342	-.809
220	312	-.186	.156	.372	-.866
220	313	-.232	.249	.595	-1.283
220	314	-.092	.204	.562	-1.327
220	315	-.138	.136	.370	-.765
220	316	-.184	.132	.213	-.957
220	317	-.175	.150	.292	-.833
220	318	-.182	.151	.301	-.894
220	319	-.238	.217	.377	-1.085
220	320	-.126	.186	.464	-.979
220	321	-.156	.141	.304	-.736
220	322	-.181	.148	.221	-.894
220	323	-.191	.135	.198	-1.026
220	324	-.188	.141	.289	-.769
220	325	-.234	.183	.311	-1.342
220	326	-.115	.152	.369	-.828
220	327	-.143	.133	.316	-.756
220	328	-.248	.137	.212	-1.040
220	329	-.228	.131	.186	-.767
220	330	-.224	.138	.242	-.795
220	331	-.189	.154	.283	-.744
220	332	-.116	.123	.320	-.577
220	333	-.210	.128	.250	-.734
220	334	-.267	.093	-.027	-.584
220	335	-.266	.153	.250	-.812
220	336	-.240	.138	.191	-.777
220	337	-.149	.147	.360	-.683
220	338	-.112	.124	.252	-.563
220	339	-.171	.119	.205	-.621
220	340	-.280	.158	.278	-.850
220	341	-.219	.129	.179	-.793
220	342	-.227	.151	.256	-.936
220	343	-.134	.132	.318	-.605
220	344	-.109	.104	.266	-.510
220	345	-.133	.123	.387	-.625
220	346	-.191	.131	.179	-.699
220	347	-.171	.124	.196	-.646
220	348	-.156	.123	.270	-.567
220	349	-.125	.121	.228	-.631
220	350	-.082	.109	.236	-.426
220	351	-.096	.112	.317	-.628
220	352	-.158	.129	.227	-.559
220	353	-.125	.114	.237	-.593
220	354	-.124	.117	.274	-.541
220	355	-.142	.123	.291	-.557
220	356	-.088	.118	.268	-.473
220	357	-.128	.113	.250	-.501
220	358	-.103	.119	.312	-.493
220	401	-.254	.201	.513	-1.052
220	402	-.242	.252	.728	-1.462
220	403	.362	.230	1.364	-.352
220	404	.108	.207	.965	-.644
220	405	.184	.224	1.037	-.400
220	406	.218	.226	1.060	-.330
220	407	.239	.221	1.163	-.345
220	408	.238	.225	1.075	-.410
220	409	.243	.215	1.054	-.522
220	410	.275	.225	1.091	-.543
220	411	.216	.196	1.057	-.349
220	412	.096	.179	.781	-.432
220	413	.198	.200	.952	-.309
220	414	.274	.213	1.183	-.328
220	415	.345	.211	1.079	-.225
220	416	.399	.230	1.502	-.152
220	417	.374	.207	1.357	-.152
220	418	.245	.184	1.117	-.250
220	419	.134	.168	.798	-.476
220	420	-.018	.143	.539	-.536
220	421	.081	.161	.722	-.382
220	422	.185	.175	.932	-.401
220	423	.250	.174	.960	-.265
220	424	.272	.182	.995	-.338
220	425	.253	.160	.961	-.291
220	426	.157	.165	1.034	-.368
220	427	.051	.158	.717	-.487
220	428	-.052	.118	.355	-.489
220	429	.010	.125	.465	-.459
220	430	.095	.133	.626	-.396
220	431	.136	.153	.773	-.298
220	432	.163	.135	.831	-.330
220	433	.154	.144	.876	-.304
220	434	.082	.146	.850	-.351
220	435	-.001	.156	.598	-.583
220	436	-.087	.122	.387	-.594
220	437	-.024	.128	.472	-.426
220	438	.031	.126	.553	-.361
220	439	.073	.122	.504	-.314
220	440	.097	.129	.562	-.325
220	441	.082	.125	.514	-.365
220	442	.026	.133	.439	-.466
220	443	-.031	.137	.436	-.513
220	444	-.099	.128	.548	-.546
220	445	-.045	.126	.386	-.505
220	446	.010	.118	.381	-.363
220	447	.033	.110	.372	-.312
220	448	.034	.122	.452	-.298
220	449	.026	.119	.428	-.413
220	450	-.005	.125	.431	-.530
220	451	-.044	.116	.349	-.495

WD	TAP	CPMEAN	CPRMS	CPMAX	CPMIN	WD	TAP	CPMEAN	CPRMS	CPMAX	CPMIN	WD	TAP	CPMEAN	CPRMS	CPMAX	CPMIN
220	452	-.101	.121	.301	-.558	220	530	-.171	.117	.219	-.624	220	812	-.153	.111	.214	-.592
220	453	-.083	.116	.344	-.561	220	531	-.164	.118	.200	-.652	220	813	-.110	.113	.222	-.523
220	454	-.038	.111	.332	-.490	220	532	-.167	.116	.200	-.647	220	814	-.237	.150	.192	-.902
220	455	.032	.115	.370	-.405	220	533	-.164	.122	.173	-.753	220	815	-.190	.118	.194	-.611
220	456	.047	.116	.483	-.345	220	534	-.185	.137	.317	-.725	220	901	-.158	.152	.333	-.901
220	457	.022	.115	.367	-.371	220	601	-.145	.147	.317	-.812	220	902	-.530	.307	.258	-1.742
220	458	-.031	.126	.356	-.403	220	602	-.147	.159	.268	-1.195	220	903	-.315	.208	.213	-1.137
220	459	-.062	.126	.337	-.507	220	603	-.141	.144	.288	-.820	220	904	-.083	.131	.566	-.793
220	460	-.006	.110	.398	-.385	220	604	-.151	.152	.360	-1.343	220	905	-.014	.220	.850	-.884
220	461	.039	.102	.439	-.334	220	605	-.140	.144	.339	-.920	220	906	-.168	.146	.290	-.906
220	462	.053	.115	.452	-.350	220	606	-.139	.139	.302	-.782	220	907	-.436	.250	.186	-1.853
220	463	.042	.108	.385	-.312	220	607	-.129	.135	.223	-.991	220	908	-.192	.158	.287	-1.001
220	464	-.025	.113	.339	-.362	220	608	-.136	.125	.335	-.652	220	909	-.129	.155	.455	-.764
220	465	-.056	.110	.371	-.370	220	609	-.135	.108	.225	-.484	220	910	-.162	.146	.332	-.792
220	466	.059	.106	.454	-.286	220	610	-.129	.104	.192	-.541	220	911	-.270	.185	.297	-1.132
220	467	.092	.113	.587	-.288	220	611	-.136	.112	.292	-.492	220	912	-.201	.164	.337	-1.103
220	468	.102	.114	.588	-.265	220	612	-.138	.114	.233	-.500	220	913	-.148	.159	.326	-.999
220	469	.086	.108	.503	-.327	220	613	-.146	.111	.199	-.479	220	914	-.175	.154	.318	-.865
220	470	.055	.111	.447	-.316	220	614	-.129	.105	.246	-.567	220	915	-.218	.166	.356	-1.036
220	471	.049	.120	.427	-.362	220	615	-.135	.112	.243	-.505	220	916	-.110	.171	.383	-.728
220	472	-.077	.107	.319	-.499	220	616	-.146	.113	.264	-.518	220	917	-.119	.163	.445	-.809
220	501	-.193	.174	.313	-1.033	220	617	-.138	.112	.178	-.528	220	918	-.109	.166	.414	-.723
220	502	-.188	.144	.294	-.889	220	618	-.143	.105	.197	-.590	220	919	-.174	.162	.523	-.841
220	503	-.197	.153	.232	-.896	220	619	-.137	.114	.253	-.610	220	920	-.247	.186	.251	-1.369
220	504	-.209	.169	.198	-1.317	220	620	-.153	.111	.222	-.621	220	921	-.223	.178	.415	-1.030
220	505	-.198	.159	.342	-.996	220	621	-.128	.124	.251	-.512	220	1101	-.172	.110	.196	-.765
220	506	-.174	.153	.355	-1.089	220	622	-.113	.115	.210	-.559	220	1102	-.190	.114	.203	-.781
220	507	-.181	.137	.301	-.843	220	623	-.127	.107	.210	-.623	220	1103	-.188	.123	.186	-.700
220	508	-.161	.132	.222	-1.045	220	624	-.133	.111	.204	-.777	220	1104	-.091	.102	.195	-.448
220	509	-.196	.141	.203	-.955	220	625	-.107	.112	.233	-.599	220	1105	-.082	.102	.292	-.382
220	510	-.178	.141	.207	-.777	220	626	-.102	.106	.299	-.615	220	1106	-.121	.102	.289	-.543
220	511	-.166	.133	.290	-.963	220	627	-.104	.121	.307	-.486	220	1107	-.105	.111	.228	-.524
220	512	-.175	.129	.189	-.850	220	628	-.105	.106	.224	-.520	220	1108	-.099	.109	.303	-.426
220	513	-.195	.142	.327	-1.070	220	629	-.102	.110	.268	-.460	220	1109	-.107	.110	.191	-.509
220	514	-.199	.140	.273	-.859	220	630	-.088	.104	.264	-.451	220	1110	-.077	.112	.348	-.471
220	515	-.189	.128	.210	-.735	220	631	-.086	.110	.245	-.531	220	1111	-.081	.106	.257	-.426
220	516	-.176	.129	.226	-.641	220	632	-.096	.111	.284	-.661	220	1112	-.084	.101	.272	-.402
220	517	-.229	.148	.241	-1.012	220	633	-.084	.109	.250	-.476	220	1113	-.096	.105	.224	-.418
220	518	-.220	.145	.210	-1.087	220	634	-.089	.098	.274	-.435	220	1114	-.087	.107	.236	-.482
220	519	-.207	.133	.214	-1.063	220	801	-.118	.109	.258	-.440	220	1115	-.103	.104	.264	-.443
220	520	-.219	.130	.172	-.709	220	802	-.134	.113	.201	-.517	220	1116	-.104	.114	.292	-.459
220	521	-.264	.159	.309	-1.240	220	803	-.099	.099	.230	-.399	220	1117	-.088	.108	.279	-.454
220	522	-.271	.157	.236	-1.096	220	804	-.097	.109	.266	-.499	220	1118	-.104	.100	.282	-.446
220	523	-.261	.142	.151	-.899	220	805	-.095	.104	.289	-.450	220	1119	-.077	.102	.277	-.473
220	524	-.266	.129	.220	-.818	220	806	-.095	.102	.336	-.494	220	1120	-.073	.102	.229	-.418
220	525	-.150	.134	.251	-.718	220	807	-.094	.111	.258	-.461	220	1121	-.083	.109	.277	-.459
220	526	-.180	.141	.284	-.813	220	808	-.102	.111	.222	-.504	220	1122	-.074	.109	.292	-.475
220	527	-.224	.130	.217	-.718	220	809	-.088	.111	.388	-.428	220	1123	-.080	.108	.228	-.495
220	528	-.251	.150	.194	-.938	220	810	-.130	.113	.227	-.626	220	1124	-.074	.104	.209	-.462
220	529	-.174	.119	.202	-.587	220	811	-.174	.113	.225	-.633	220	1125	-.077	.109	.320	-.585

WD	TAP	CPMEAN	CPRMS	CPMAX	CPMIN
220	1126	-.118	.109	.223	-.497
220	1201	-.191	.114	.189	-.552
220	1202	-.182	.123	.289	-.676
220	1203	-.252	.123	.107	-.728
220	1204	-.189	.122	.215	-.579
220	1205	-.144	.119	.236	-.595
220	1206	-.266	.148	.168	-.816
220	1207	-.201	.137	.200	-.915
220	1208	-.097	.100	.330	-.520
220	1209	-.110	.099	.207	-.432
220	1210	-.097	.102	.261	-.456
220	1211	-.169	.109	.233	-.518
220	1212	-.123	.104	.206	-.456
220	1213	-.113	.096	.239	-.410
220	1214	.063	.118	.446	-.291
220	1215	-.136	.094	.126	-.418
220	1216	-.128	.100	.321	-.543
220	1217	-.083	.096	.219	-.424
220	1218	-.086	.095	.228	-.395
220	1219	-.098	.097	.244	-.395
220	1220	-.094	.099	.231	-.546
220	1221	-.122	.101	.282	-.553
220	1222	-.088	.092	.218	-.390
220	1223	-.082	.085	.193	-.393
220	1224	.058	.108	.414	-.283
220	1225	-.121	.098	.149	-.436
220	1226	-.082	.101	.272	-.385
220	1227	-.075	.101	.211	-.522
220	1228	-.072	.098	.335	-.426
220	1229	-.087	.104	.223	-.533
220	1301	-.010	.121	.388	-.388
220	1302	.058	.120	.458	-.454
220	1303	.028	.125	.418	-.503
220	1304	-.143	.107	.201	-.485
220	1305	.009	.117	.488	-.371
220	1306	-.035	.103	.256	-.447
220	1307	-.121	.116	.302	-.581
220	1308	-.155	.108	.261	-.575
220	1309	-.144	.110	.244	-.475
220	1311	.003	.116	.395	-.373
220	1312	-.006	.109	.470	-.331
220	1313	-.057	.116	.299	-.508
220	1314	-.064	.117	.314	-.535
220	1315	-.135	.108	.196	-.500
220	1316	-.111	.104	.231	-.472
220	1317	.034	.103	.380	-.356
220	1318	-.047	.112	.353	-.442
220	1319	-.011	.106	.340	-.345
220	1320	.033	.102	.330	-.294
220	1321	-.031	.107	.340	-.380

WD	TAP	CPMEAN	CPRMS	CPMAX	CPMIN
220	1322	-.150	.104	.243	-.530
220	1323	-.104	.106	.228	-.436
220	1324	.082	.115	.546	-.284
220	1325	.077	.111	.464	-.301
220	1326	.061	.111	.421	-.301
220	1327	.095	.126	.550	-.243
220	1328	-.119	.117	.257	-.475
220	1329	-.106	.104	.231	-.466
220	1330	-.034	.114	.325	-.473
220	1331	.003	.110	.345	-.434
220	1401	-.190	.116	.163	-.624
220	1402	-.226	.116	.135	-.748
220	1403	-.247	.126	.076	-.905
220	1404	-.157	.112	.232	-.553
220	1405	-.152	.112	.147	-.644
220	1406	-.223	.120	.104	-.692
220	1407	-.192	.121	.168	-.749
220	1408	-.141	.109	.182	-.545
220	1409	-.108	.104	.207	-.636
220	1410	-.098	.097	.286	-.428
220	1411	-.118	.100	.238	-.460
220	1412	-.128	.095	.160	-.458
220	1413	-.173	.111	.219	-.636
220	1414	-.114	.102	.155	-.501
220	1415	-.104	.107	.251	-.566
220	1416	-.093	.104	.205	-.530
220	1417	-.123	.095	.240	-.438
220	1418	-.156	.117	.211	-.592
220	1419	-.124	.109	.203	-.532
220	1420	-.167	.120	.226	-.595
220	1421	-.201	.123	.214	-.656
220	1422	-.095	.096	.243	-.452
220	1423	-.089	.096	.192	-.418
220	1424	-.087	.106	.375	-.550
220	1425	-.117	.108	.221	-.472
220	1426	-.133	.101	.258	-.484
220	1427	-.071	.096	.325	-.353
220	1428	-.062	.101	.246	-.546
220	1429	-.064	.099	.330	-.376
220	1430	-.077	.097	.240	-.390
220	1431	-.108	.095	.170	-.427
220	1432	-.123	.104	.185	-.441
220	1433	-.128	.107	.224	-.489
220	1434	-.170	.114	.197	-.560
220	1435	-.162	.115	.177	-.698
220	1901	-.109	.106	.249	-.545
220	1902	.042	.100	.341	-.435
220	1903	.148	.097	.520	-.189
220	1904	-.051	.094	.277	-.416
220	1905	-.025	.102	.240	-.432

WD	TAP	CPMEAN	CPRMS	CPMAX	CPMIN
220	1906	-.095	.104	.259	-.523
220	1907	-.102	.101	.279	-.437
220	1908	-.114	.108	.224	-.521
220	1909	-.108	.099	.216	-.445
220	1910	-.113	.105	.237	-.462
220	1911	-.102	.102	.187	-.459
220	1912	-.083	.111	.286	-.480
220	1913	-.091	.096	.247	-.480
220	1914	-.099	.096	.178	-.403
220	1915	-.090	.103	.211	-.449
220	1916	-.111	.099	.202	-.529
220	1917	-.108	.106	.223	-.421
220	1918	-.107	.096	.176	-.472
220	1919	-.108	.097	.200	-.413
220	1920	-.095	.100	.232	-.491
220	1921	-.098	.099	.240	-.472
220	1922	-.097	.103	.269	-.456
220	1923	-.103	.100	.247	-.461
220	1924	-.109	.102	.221	-.443
220	1925	-.129	.106	.174	-.593
220	1926	-.101	.095	.161	-.412
220	1927	-.108	.108	.295	-.477
220	1928	-.096	.098	.249	-.461
220	1929	-.101	.106	.182	-.470
220	1930	-.108	.106	.245	-.454
220	1931	-.099	.097	.262	-.388
220	1932	-.086	.094	.185	-.382
220	1933	-.108	.105	.201	-.494
220	1934	-.103	.113	.267	-.554
220	1935	-.098	.103	.240	-.446
220	1936	-.097	.113	.320	-.448
220	1937	-.107	.096	.257	-.422
220	1938	-.096	.101	.236	-.409
220	1939	-.095	.101	.224	-.438
220	1940	-.110	.104	.227	-.420
220	1941	-.091	.108	.236	-.427
220	1942	-.099	.099	.199	-.441
220	1943	-.122	.095	.172	-.401
220	1944	-.115	.093	.164	-.457
220	1945	-.107	.098	.228	-.467
220	1946	-.084	.109	.311	-.448
220	1947	-.148	.106	.320	-.504
220	1948	-.145	.109	.159	-.557
220	1949	-.128	.102	.160	-.519
220	1950	-.122	.096	.155	-.444
220	1951	-.161	.113	.276	-.577
220	1952	-.155	.135	.459	-.675
220	1953	-.202	.126	.133	-.656
220	1954	-.181	.116	.239	-.547
220	1955	-.148	.104	.207	-.513

WD	TAP	CPMEAN	CPRMS	CPMAX	CPMIN	WD	TAP	CPMEAN	CPRMS	CPMAX	CPMIN	WD	TAP	CPMEAN	CPRMS	CPMAX	CPMIN
220	1956	-.127	.106	.224	-.460	230	138	-.102	.102	.227	-.427	230	201	-.098	.126	.246	-.650
220	1957	-.180	.108	.136	-.598	230	139	-.101	.107	.261	-.518	230	202	-.177	.129	.218	-.718
220	1958	-.163	.112	.189	-.584	230	140	-.084	.105	.341	-.441	230	203	-.129	.133	.347	-.799
220	1959	-.157	.104	.155	-.650	230	141	-.102	.104	.249	-.557	230	204	-.104	.123	.291	-.584
220	1960	-.132	.111	.286	-.484	230	142	-.111	.113	.349	-.507	230	205	-.102	.125	.324	-.689
220	1961	-.139	.095	.175	-.454	230	143	-.121	.111	.251	-.480	230	206	-.120	.123	.352	-.545
220	1962	-.041	.100	.327	-.484	230	144	-.129	.109	.191	-.485	230	207	-.107	.132	.242	-.823
220	1963	-.054	.099	.279	-.389	230	145	-.110	.111	.368	-.434	230	208	-.104	.143	.362	-.828
220	1964	-.092	.103	.231	-.415	230	146	-.114	.111	.302	-.516	230	209	-.101	.142	.386	-.999
220	1965	-.163	.107	.143	-.547	230	147	-.110	.114	.273	-.558	230	210	-.107	.152	.422	-.847
220	1966	-.152	.102	.168	-.555	230	148	-.099	.102	.234	-.482	230	211	-.109	.151	.313	-1.087
220	1967	-.137	.097	.167	-.412	230	149	-.110	.108	.259	-.482	230	212	-.095	.113	.251	-.510
220	1968	-.137	.106	.181	-.571	230	150	-.112	.111	.317	-.560	230	213	-.098	.123	.273	-.599
230	101	-.139	.144	.313	-.726	230	151	-.112	.110	.310	-.596	230	214	-.122	.117	.309	-.512
230	102	-.142	.145	.318	-1.003	230	152	-.123	.116	.208	-.575	230	215	-.109	.119	.290	-.652
230	103	-.168	.157	.350	-.874	230	153	-.157	.118	.183	-.612	230	216	-.096	.117	.242	-.535
230	104	-.112	.145	.400	-.887	230	154	-.040	.114	.424	-.410	230	217	-.097	.121	.271	-.655
230	105	-.107	.146	.373	-1.496	230	155	-.051	.108	.322	-.404	230	218	-.103	.130	.362	-.791
230	106	-.114	.146	.398	-1.126	230	156	-.052	.106	.343	-.385	230	219	-.096	.134	.298	-.894
230	107	-.126	.146	.286	-.855	230	157	-.073	.110	.275	-.460	230	220	-.114	.129	.307	-.774
230	108	-.116	.129	.409	-.617	230	158	-.090	.114	.293	-.450	230	221	-.109	.119	.290	-.623
230	109	-.122	.129	.313	-.748	230	159	-.108	.110	.266	-.484	230	222	-.114	.117	.259	-.671
230	110	-.110	.124	.316	-.531	230	160	-.124	.119	.191	-.591	230	223	-.106	.112	.303	-.667
230	111	-.102	.126	.319	-.590	230	161	-.140	.120	.300	-.620	230	224	-.116	.115	.318	-.559
230	112	-.108	.126	.306	-.543	230	162	-.131	.122	.305	-.586	230	225	-.098	.109	.285	-.532
230	113	-.108	.128	.245	-.630	230	163	-.151	.122	.225	-.876	230	226	-.100	.113	.281	-.579
230	114	-.107	.128	.266	-.603	230	164	-.065	.110	.280	-.676	230	227	-.115	.119	.273	-.623
230	115	-.111	.130	.279	-.800	230	165	-.059	.111	.336	-.446	230	228	-.125	.128	.305	-.604
230	116	-.103	.130	.333	-.872	230	166	-.059	.105	.283	-.501	230	229	-.135	.122	.198	-.806
230	117	-.109	.117	.274	-.928	230	167	-.059	.106	.314	-.465	230	230	-.120	.119	.198	-.709
230	118	-.101	.114	.274	-.669	230	168	-.064	.106	.280	-.436	230	231	-.120	.122	.293	-.528
230	119	-.104	.113	.319	-.482	230	169	-.086	.105	.292	-.444	230	232	-.126	.125	.259	-.530
230	120	-.094	.110	.215	-.486	230	170	-.103	.109	.256	-.523	230	233	-.101	.115	.312	-.589
230	121	-.088	.111	.245	-.506	230	171	-.128	.117	.286	-.521	230	234	-.102	.121	.230	-.481
230	122	-.093	.109	.276	-.435	230	172	-.171	.127	.267	-.636	230	235	-.106	.117	.339	-.505
230	123	-.110	.111	.303	-.583	230	173	-.212	.140	.195	-.881	230	236	-.123	.134	.318	-.689
230	124	-.109	.111	.195	-.481	230	174	-.074	.104	.235	-.446	230	237	-.141	.122	.213	-.709
230	125	-.109	.114	.304	-.471	230	175	-.069	.110	.297	-.476	230	238	-.127	.121	.197	-.579
230	126	-.107	.110	.261	-.468	230	176	-.075	.097	.307	-.429	230	239	-.125	.128	.278	-.608
230	127	-.098	.110	.349	-.490	230	177	-.068	.107	.300	-.427	230	240	-.102	.111	.285	-.599
230	128	-.098	.109	.230	-.523	230	178	-.099	.106	.277	-.442	230	241	-.081	.109	.285	-.498
230	129	-.098	.110	.254	-.446	230	179	-.114	.113	.220	-.511	230	242	-.073	.107	.244	-.464
230	130	-.092	.116	.334	-.502	230	180	-.073	.110	.314	-.444	230	243	-.086	.108	.307	-.576
230	131	-.096	.111	.242	-.497	230	181	-.073	.107	.309	-.409	230	244	-.108	.122	.251	-.616
230	132	-.098	.111	.286	-.569	230	182	-.073	.104	.287	-.456	230	245	-.101	.120	.251	-.505
230	133	-.104	.124	.326	-.555	230	183	-.103	.104	.264	-.489	230	246	-.126	.111	.277	-.524
230	134	-.123	.117	.246	-.563	230	184	-.073	.102	.257	-.387	230	247	-.119	.111	.267	-.533
230	135	-.122	.118	.261	-.473	230	185	-.069	.107	.284	-.396	230	248	-.097	.110	.257	-.496
230	136	-.115	.116	.266	-.504	230	186	-.066	.105	.294	-.441	230	249	-.098	.113	.245	-.513
230	137	-.116	.114	.261	-.456	230	187	-.112	.121	.352	-.492	230	250	-.100	.104	.250	-.427

WD	TAP	CPMEAN	CPRMS	CPMAX	CPMIN	WD	TAP	CPMEAN	CPRMS	CPMAX	CPMIN	WD	TAP	CPMEAN	CPRMS	CPMAX	CPMIN
230	251	-.103	.115	.330	-.514	230	329	-.199	.136	.255	-.860	230	421	.091	.137	.577	-.511
230	252	-.107	.111	.300	-.553	230	330	-.162	.141	.244	-.720	230	422	.050	.125	.508	-.340
230	253	-.114	.114	.257	-.456	230	331	-.113	.146	.339	-.564	230	423	.089	.158	.807	-.359
230	254	-.097	.103	.228	-.445	230	332	-.098	.124	.340	-.693	230	424	.101	.133	.774	-.356
230	255	-.095	.106	.224	-.496	230	333	-.144	.128	.283	-.780	230	425	.133	.164	.892	-.375
230	256	-.078	.102	.239	-.457	230	334	-.253	.106	.015	-.674	230	426	.058	.148	.784	-.456
230	257	-.066	.094	.298	-.375	230	335	-.188	.139	.273	-.850	230	427	.020	.151	.615	-.493
230	258	-.070	.101	.281	-.429	230	336	-.164	.120	.239	-.667	230	428	-.060	.123	.391	-.493
230	259	-.070	.105	.317	-.458	230	337	-.093	.126	.344	-.600	230	429	-.013	.118	.358	-.440
230	260	-.103	.115	.267	-.539	230	338	-.087	.125	.291	-.692	230	430	.025	.128	.478	-.428
230	261	-.101	.110	.229	-.506	230	339	-.114	.110	.257	-.669	230	431	.051	.128	.547	-.389
230	262	-.092	.114	.305	-.462	230	340	-.177	.138	.255	-.757	230	432	.061	.134	.687	-.451
230	263	-.087	.110	.262	-.431	230	341	-.145	.116	.250	-.599	230	433	.052	.128	.600	-.428
230	264	-.079	.115	.287	-.457	230	342	-.129	.115	.332	-.543	230	434	.022	.139	.674	-.461
230	265	-.077	.105	.265	-.432	230	343	-.090	.122	.314	-.551	230	435	-.012	.131	.579	-.476
230	266	-.090	.105	.254	-.466	230	344	-.081	.103	.275	-.427	230	436	-.068	.120	.424	-.499
230	267	-.088	.112	.451	-.529	230	345	-.096	.107	.241	-.596	230	437	-.026	.122	.468	-.588
230	268	-.084	.105	.277	-.507	230	346	-.122	.124	.361	-.619	230	438	.013	.113	.503	-.389
230	269	-.081	.104	.259	-.442	230	347	-.109	.107	.218	-.606	230	439	.024	.111	.565	-.317
230	270	-.081	.119	.330	-.441	230	348	-.105	.111	.231	-.529	230	440	.031	.116	.375	-.344
230	271	-.078	.105	.300	-.454	230	349	-.088	.114	.337	-.504	230	441	.026	.131	.485	-.497
230	272	-.089	.097	.247	-.484	230	350	-.078	.110	.367	-.472	230	442	-.012	.112	.427	-.402
230	301	-.147	.245	.740	-1.286	230	351	-.079	.108	.279	-.464	230	443	-.029	.126	.470	-.623
230	302	-.031	.148	.532	-.674	230	352	-.103	.115	.300	-.427	230	444	-.061	.113	.491	-.426
230	303	-.111	.139	.386	-.583	230	353	-.092	.116	.274	-.484	230	445	-.018	.108	.378	-.428
230	304	-.257	.170	.207	-1.011	230	354	-.090	.116	.304	-.489	230	446	.014	.115	.419	-.385
230	305	-.192	.142	.251	-.759	230	355	-.094	.108	.240	-.500	230	447	.004	.100	.417	-.318
230	306	-.169	.145	.350	-.782	230	356	-.084	.117	.306	-.469	230	448	.002	.099	.296	-.328
230	307	-.102	.204	.575	-1.067	230	357	-.094	.111	.262	-.479	230	449	.001	.100	.365	-.366
230	308	-.012	.155	.561	-.852	230	358	-.083	.111	.270	-.497	230	450	-.024	.102	.283	-.376
230	309	-.098	.113	.252	-.470	230	401	-.208	.175	.539	-1.314	230	451	-.047	.103	.415	-.439
230	310	-.177	.127	.234	-.880	230	402	-.165	.229	1.095	-1.355	230	452	-.040	.114	.482	-.392
230	311	-.162	.129	.246	-.690	230	403	.280	.253	1.181	-.570	230	453	-.027	.117	.366	-.477
230	312	-.157	.121	.210	-.635	230	404	-.026	.150	.654	-.493	230	454	-.017	.103	.311	-.366
230	313	-.157	.209	.608	-1.094	230	405	.039	.192	.934	-.417	230	455	.011	.098	.407	-.322
230	314	-.059	.152	.433	-.811	230	406	.055	.192	1.049	-.481	230	456	.015	.109	.422	-.362
230	315	-.110	.123	.306	-.622	230	407	.088	.194	.922	-.504	230	457	-.005	.109	.412	-.434
230	316	-.157	.115	.242	-.684	230	408	.138	.229	1.166	-.451	230	458	-.033	.107	.288	-.405
230	317	-.157	.118	.254	-.695	230	409	.195	.234	1.126	-.473	230	459	-.054	.119	.299	-.514
230	318	-.142	.129	.259	-.765	230	410	.218	.240	1.041	-.433	230	460	-.018	.112	.352	-.338
230	319	-.154	.195	.450	-1.107	230	411	.182	.212	.987	-.489	230	461	.008	.111	.414	-.383
230	320	-.094	.146	.378	-1.051	230	412	-.025	.134	.667	-.657	230	462	.002	.105	.362	-.345
230	321	-.139	.136	.273	-.595	230	413	.048	.159	.742	-.433	230	463	-.008	.106	.357	-.346
230	322	-.180	.131	.169	-.809	230	414	.135	.197	1.184	-.456	230	464	-.034	.111	.366	-.380
230	323	-.165	.138	.216	-.664	230	415	.176	.211	1.180	-.349	230	465	-.055	.110	.331	-.474
230	324	-.151	.123	.213	-.613	230	416	.209	.214	1.113	-.338	230	466	.033	.124	.478	-.381
230	325	-.137	.160	.497	-.795	230	417	.275	.239	1.326	-.395	230	467	.035	.113	.475	-.341
230	326	-.095	.133	.466	-.742	230	418	.185	.186	1.074	-.402	230	468	.037	.110	.408	-.319
230	327	-.134	.131	.337	-.602	230	419	.102	.176	.956	-.464	230	469	.019	.109	.455	-.386
230	328	-.203	.147	.200	-.845	230	420	-.055	.123	.395	-.433	230	470	.014	.119	.406	-.388

WD	TAP	CPMEAN	CPRMS	CPMAX	CPMIN	WD	TAP	CPMEAN	CPRMS	CPMAX	CPMIN	WD	TAP	CPMEAN	CPRMS	CPMAX	CPMIN
230	471	.007	.103	.339	-.299	230	615	-.122	.110	.215	-.534	230	916	-.095	.141	.466	-.835
230	472	-.035	.113	.377	-.417	230	616	-.129	.116	.293	-.556	230	917	-.103	.142	.306	-.869
230	501	-.155	.131	.252	-.791	230	617	-.109	.110	.246	-.442	230	918	-.087	.140	.462	-.812
230	502	-.175	.146	.362	-.817	230	618	-.104	.106	.206	-.454	230	919	-.140	.144	.456	-.835
230	503	-.171	.137	.393	-.834	230	619	-.103	.104	.225	-.518	230	920	-.177	.174	.382	-1.156
230	504	-.165	.138	.268	-.980	230	620	-.124	.106	.273	-.442	230	921	-.169	.161	.328	-.921
230	505	-.159	.139	.265	-.866	230	621	-.083	.110	.273	-.446	230	1101	-.124	.092	.192	-.436
230	506	-.160	.130	.223	-.680	230	622	-.081	.106	.285	-.477	230	1102	-.140	.103	.182	-.466
230	507	-.143	.123	.221	-.863	230	623	-.093	.119	.337	-.538	230	1103	-.130	.108	.244	-.495
230	508	-.140	.115	.301	-.820	230	624	-.100	.108	.285	-.477	230	1104	-.069	.104	.314	-.458
230	509	-.153	.137	.295	-.866	230	625	-.077	.092	.264	-.360	230	1105	-.072	.100	.273	-.364
230	510	-.153	.129	.226	-.747	230	626	-.077	.106	.298	-.486	230	1106	-.089	.100	.216	-.385
230	511	-.153	.125	.270	-.745	230	627	-.092	.113	.235	-.474	230	1107	-.072	.091	.242	-.433
230	512	-.143	.119	.363	-.704	230	628	-.080	.099	.289	-.415	230	1108	-.067	.094	.236	-.348
230	513	-.165	.135	.280	-.818	230	629	-.075	.109	.337	-.457	230	1109	-.074	.100	.287	-.417
230	514	-.170	.124	.275	-.753	230	630	-.072	.106	.266	-.406	230	1110	-.044	.094	.226	-.378
230	515	-.178	.118	.246	-.675	230	631	-.071	.106	.256	-.411	230	1111	-.059	.093	.225	-.369
230	516	-.173	.132	.218	-.709	230	632	-.070	.109	.263	-.437	230	1112	-.060	.101	.324	-.397
230	517	-.170	.140	.236	-.850	230	633	-.070	.105	.290	-.491	230	1113	-.068	.098	.278	-.396
230	518	-.172	.127	.242	-.969	230	634	-.068	.109	.293	-.412	230	1114	-.069	.104	.266	-.391
230	519	-.191	.137	.208	-.868	230	801	-.085	.118	.268	-.449	230	1115	-.077	.110	.289	-.420
230	520	-.201	.149	.285	-.786	230	802	-.088	.116	.290	-.436	230	1116	-.073	.103	.286	-.413
230	521	-.151	.123	.270	-.742	230	803	-.074	.102	.273	-.409	230	1117	-.066	.096	.268	-.362
230	522	-.177	.133	.219	-.944	230	804	-.075	.110	.333	-.454	230	1118	-.080	.099	.232	-.369
230	523	-.222	.140	.168	-.949	230	805	-.071	.111	.320	-.412	230	1119	-.064	.096	.223	-.381
230	524	-.230	.140	.230	-1.651	230	806	-.068	.098	.273	-.488	230	1120	-.059	.090	.231	-.420
230	525	-.127	.122	.290	-.765	230	807	-.079	.106	.317	-.436	230	1121	-.074	.092	.194	-.413
230	526	-.114	.118	.285	-.567	230	808	-.076	.095	.260	-.436	230	1122	-.068	.096	.217	-.401
230	527	-.148	.126	.327	-.608	230	809	-.072	.102	.256	-.411	230	1123	-.065	.102	.286	-.442
230	528	-.206	.148	.235	-.891	230	810	-.096	.114	.377	-.491	230	1124	-.061	.105	.327	-.430
230	529	-.137	.109	.275	-.549	230	811	-.133	.106	.215	-.558	230	1125	-.064	.102	.304	-.360
230	530	-.140	.111	.269	-.524	230	812	-.122	.111	.243	-.559	230	1126	-.071	.096	.249	-.343
230	531	-.118	.115	.361	-.514	230	813	-.116	.107	.243	-.474	230	1201	-.128	.094	.138	-.424
230	532	-.127	.118	.267	-.541	230	814	-.187	.132	.292	-.596	230	1202	-.123	.111	.438	-.594
230	533	-.103	.109	.249	-.494	230	815	-.154	.108	.188	-.571	230	1203	-.164	.108	.216	-.570
230	534	-.108	.141	.411	-.522	230	901	-.149	.149	.279	-1.029	230	1204	-.122	.114	.236	-.517
230	601	-.134	.137	.369	-1.075	230	902	-.468	.329	.212	-2.190	230	1205	-.094	.110	.349	-.500
230	602	-.127	.144	.287	-.832	230	903	-.265	.194	.245	-1.035	230	1206	-.158	.120	.219	-.671
230	603	-.134	.141	.272	-.727	230	904	-.053	.133	.432	-.588	230	1207	-.141	.107	.238	-.454
230	604	-.125	.134	.321	-.710	230	905	-.002	.231	.834	-1.029	230	1208	-.067	.095	.286	-.356
230	605	-.122	.129	.232	-.738	230	906	-.142	.138	.293	-.634	230	1209	-.083	.091	.198	-.409
230	606	-.111	.122	.290	-.686	230	907	-.355	.250	.251	-1.387	230	1210	-.065	.099	.270	-.435
230	607	-.123	.121	.257	-.634	230	908	-.162	.155	.335	-.837	230	1211	-.136	.101	.214	-.514
230	608	-.120	.122	.282	-.713	230	909	-.107	.144	.434	-.696	230	1212	-.090	.098	.267	-.434
230	609	-.117	.105	.320	-.486	230	910	-.142	.144	.353	-.787	230	1213	-.088	.085	.142	-.362
230	610	-.113	.107	.223	-.457	230	911	-.227	.179	.326	-.982	230	1214	-.015	.122	.486	-.439
230	611	-.119	.114	.273	-.516	230	912	-.190	.168	.271	-.950	230	1215	-.109	.098	.206	-.423
230	612	-.125	.100	.183	-.498	230	913	-.118	.132	.382	-.709	230	1216	-.090	.094	.227	-.354
230	613	-.117	.114	.230	-.488	230	914	-.154	.150	.326	-.776	230	1217	-.056	.091	.233	-.350
230	614	-.122	.109	.270	-.511	230	915	-.152	.152	.333	-.921	230	1218	-.060	.091	.257	-.361

WD	TAP	CPMEAN	CPRMS	CPMAX	CPMIN
230	1219	-.063	.094	.235	-.361
230	1220	-.068	.088	.238	-.415
230	1221	-.090	.095	.253	-.382
230	1222	-.059	.092	.288	-.420
230	1223	-.048	.093	.213	-.335
230	1224	.023	.105	.364	-.324
230	1225	-.079	.098	.267	-.407
230	1226	-.058	.095	.313	-.386
230	1227	-.054	.088	.198	-.401
230	1228	-.050	.096	.310	-.338
230	1229	-.058	.090	.224	-.342
230	1301	-.046	.101	.358	-.335
230	1302	.032	.125	.521	-.360
230	1303	-.020	.125	.433	-.418
230	1304	-.108	.097	.235	-.425
230	1305	-.021	.103	.343	-.340
230	1306	-.040	.103	.327	-.410
230	1307	-.086	.097	.177	-.407
230	1308	-.121	.103	.174	-.472
230	1309	-.091	.106	.291	-.447
230	1311	-.022	.112	.389	-.370
230	1312	-.019	.113	.341	-.433
230	1313	-.050	.108	.298	-.386
230	1314	-.026	.096	.328	-.317
230	1315	-.103	.098	.216	-.454
230	1316	-.085	.098	.203	-.426
230	1317	-.001	.094	.314	-.386
230	1318	-.054	.093	.214	-.398
230	1319	-.019	.101	.329	-.425
230	1320	.006	.106	.368	-.377
230	1321	-.021	.100	.339	-.313
230	1322	-.101	.096	.267	-.428
230	1323	-.073	.094	.260	-.361
230	1324	.028	.101	.345	-.269
230	1325	.019	.103	.430	-.334
230	1326	.020	.095	.315	-.286
230	1327	.032	.107	.524	-.311
230	1328	-.053	.110	.368	-.417
230	1329	-.067	.098	.273	-.371
230	1330	-.082	.103	.200	-.523
230	1331	-.053	.102	.269	-.451
230	1401	-.146	.101	.189	-.506
230	1402	-.161	.106	.210	-.537
230	1403	-.174	.100	.096	-.523
230	1404	-.106	.106	.217	-.505
230	1405	-.105	.097	.223	-.427
230	1406	-.157	.106	.143	-.553
230	1407	-.123	.111	.229	-.637
230	1408	-.085	.095	.185	-.365
230	1409	-.079	.089	.209	-.472
230	1410	-.077	.094	.271	-.389
230	1411	-.074	.094	.259	-.418
230	1412	-.076	.097	.220	-.402
230	1413	-.124	.109	.199	-.556
230	1414	-.074	.097	.271	-.384
230	1415	-.073	.095	.310	-.407
230	1416	-.068	.091	.210	-.370
230	1417	-.079	.090	.269	-.370
230	1418	-.117	.100	.178	-.476
230	1419	-.096	.100	.188	-.417
230	1420	-.145	.106	.224	-.526
230	1421	-.142	.101	.183	-.476
230	1422	-.079	.089	.174	-.390
230	1423	-.069	.095	.255	-.345
230	1424	-.060	.094	.239	-.331
230	1425	-.076	.095	.209	-.364
230	1426	-.101	.097	.218	-.411
230	1427	-.059	.095	.231	-.348
230	1428	-.059	.090	.236	-.412
230	1429	-.060	.097	.286	-.374
230	1430	-.057	.095	.295	-.391
230	1431	-.070	.098	.222	-.433
230	1432	-.092	.104	.194	-.467
230	1433	-.085	.093	.246	-.457
230	1434	-.149	.112	.274	-.627
230	1435	-.140	.111	.169	-.627
230	1901	-.068	.099	.270	-.434
230	1902	.059	.086	.330	-.236
230	1903	.166	.079	.430	-.085
230	1904	-.028	.087	.278	-.321
230	1905	.008	.098	.387	-.370
230	1906	-.060	.093	.248	-.438
230	1907	-.075	.098	.204	-.388
230	1908	-.082	.102	.209	-.462
230	1909	-.072	.093	.236	-.421
230	1910	-.082	.095	.231	-.400
230	1911	-.068	.095	.288	-.366
230	1912	-.062	.095	.228	-.377
230	1913	-.071	.090	.233	-.389
230	1914	-.076	.088	.223	-.364
230	1915	-.066	.097	.259	-.394
230	1916	-.078	.092	.207	-.408
230	1917	-.078	.091	.191	-.386
230	1918	-.077	.091	.231	-.388
230	1919	-.076	.099	.212	-.419
230	1920	-.068	.108	.262	-.377
230	1921	-.075	.088	.207	-.354
230	1922	-.072	.088	.193	-.386
230	1923	-.073	.095	.226	-.358
230	1924	-.079	.092	.239	-.430
230	1925	-.099	.093	.162	-.392
230	1926	-.079	.092	.211	-.391
230	1927	-.083	.088	.179	-.384
230	1928	-.075	.091	.251	-.381
230	1929	-.070	.102	.284	-.478
230	1930	-.074	.094	.248	-.408
230	1931	-.076	.098	.211	-.400
230	1932	-.060	.092	.205	-.399
230	1933	-.071	.097	.237	-.415
230	1934	-.075	.098	.246	-.368
230	1935	.071	.096	.276	-.381
230	1936	-.072	.093	.230	-.402
230	1937	-.078	.094	.240	-.413
230	1938	-.079	.097	.289	-.386
230	1939	-.074	.098	.283	-.395
230	1940	-.077	.096	.214	-.472
230	1941	-.071	.095	.229	-.387
230	1942	-.072	.093	.248	-.360
230	1943	-.086	.098	.221	-.394
230	1944	-.090	.098	.195	-.383
230	1945	-.090	.092	.248	-.397
230	1946	-.078	.092	.210	-.394
230	1947	-.106	.100	.219	-.430
230	1948	-.111	.097	.226	-.493
230	1949	-.102	.091	.155	-.384
230	1950	-.099	.094	.214	-.422
230	1951	-.123	.093	.162	-.425
230	1952	-.125	.101	.228	-.489
230	1953	-.137	.108	.291	-.581
230	1954	-.128	.099	.211	-.463
230	1955	-.120	.100	.155	-.435
230	1956	-.103	.102	.201	-.444
230	1957	-.125	.101	.196	-.506
230	1958	-.125	.103	.208	-.498
230	1959	-.122	.099	.225	-.441
230	1960	-.106	.096	.195	-.416
230	1961	-.113	.094	.206	-.495
230	1962	-.046	.099	.298	-.332
230	1963	-.049	.094	.258	-.368
230	1964	-.066	.095	.227	-.492
230	1965	-.129	.099	.162	-.540
230	1966	-.122	.095	.208	-.463
230	1967	-.106	.102	.227	-.465
230	1968	-.109	.109	.235	-.419
240	101	-.106	.139	.336	-.653
240	102	-.120	.133	.371	-.759
240	103	-.138	.139	.464	-.792
240	104	-.068	.131	.565	-.546
240	105	-.080	.137	.614	-.667
240	106	-.092	.129	.467	-.579

WD	TAP	CPMEAN	CPRMS	CPMAX	CPMIN	WD	TAP	CPMEAN	CPRMS	CPMAX	CPMIN	WD	TAP	CPMEAN	CPRMS	CPMAX	CPMIN
240	107	-.111	.139	.330	-1.033	240	157	-.063	.113	.400	-.425	240	220	-.071	.108	.317	-.497
240	108	-.108	.114	.223	-.629	240	158	-.078	.105	.288	-.428	240	221	-.063	.119	.327	-.524
240	109	-.108	.120	.294	-.571	240	159	-.100	.105	.285	-.455	240	222	-.067	.111	.375	-.446
240	110	-.101	.111	.275	-.473	240	160	-.116	.104	.213	-.471	240	223	-.068	.104	.282	-.404
240	111	-.101	.117	.330	-.543	240	161	-.118	.106	.233	-.466	240	224	-.061	.108	.287	-.411
240	112	-.098	.113	.231	-.625	240	162	-.108	.104	.230	-.528	240	225	-.064	.112	.277	-.457
240	113	-.109	.117	.335	-.533	240	163	-.113	.111	.285	-.625	240	226	-.061	.099	.322	-.371
240	114	-.087	.111	.274	-.551	240	164	-.059	.116	.330	-.401	240	227	-.071	.109	.358	-.412
240	115	-.087	.108	.280	-.405	240	165	-.053	.109	.325	-.458	240	228	-.072	.109	.254	-.534
240	116	-.085	.108	.251	-.549	240	166	-.052	.104	.313	-.431	240	229	-.073	.109	.360	-.495
240	117	-.095	.114	.323	-.751	240	167	-.056	.111	.315	-.453	240	230	-.066	.108	.277	-.386
240	118	-.094	.120	.289	-.480	240	168	-.061	.105	.318	-.471	240	231	-.079	.107	.357	-.391
240	119	-.091	.111	.229	-.508	240	169	-.070	.099	.270	-.370	240	232	-.062	.103	.325	-.419
240	120	-.097	.108	.287	-.478	240	170	-.102	.111	.242	-.450	240	233	-.063	.102	.338	-.346
240	121	-.095	.115	.302	-.440	240	171	-.142	.112	.213	-.581	240	234	-.072	.101	.249	-.462
240	122	-.100	.110	.262	-.491	240	172	-.173	.125	.216	-.627	240	235	-.072	.102	.255	-.404
240	123	-.089	.103	.279	-.450	240	173	-.234	.149	.168	-.987	240	236	-.074	.107	.252	-.547
240	124	-.093	.111	.269	-.448	240	174	-.070	.112	.284	-.459	240	237	-.073	.108	.315	-.454
240	125	-.088	.106	.242	-.424	240	175	-.063	.106	.338	-.506	240	238	-.068	.111	.314	-.444
240	126	-.087	.116	.308	-.465	240	176	-.069	.113	.306	-.429	240	239	-.074	.110	.289	-.524
240	127	-.080	.113	.297	-.431	240	177	-.072	.116	.349	-.429	240	240	-.070	.102	.280	-.434
240	128	-.085	.118	.300	-.490	240	178	-.083	.111	.280	-.437	240	241	-.062	.108	.299	-.439
240	129	-.081	.110	.320	-.540	240	179	-.096	.105	.178	-.442	240	242	-.074	.106	.328	-.451
240	130	-.083	.109	.325	-.415	240	180	-.059	.108	.356	-.425	240	243	-.061	.098	.267	-.387
240	131	-.086	.113	.272	-.541	240	181	-.062	.100	.279	-.412	240	244	-.067	.111	.257	-.412
240	132	-.095	.112	.270	-.463	240	182	-.071	.102	.277	-.464	240	245	-.063	.107	.270	-.399
240	133	-.091	.109	.257	-.466	240	183	-.089	.107	.267	-.516	240	246	-.091	.112	.265	-.447
240	134	-.096	.106	.262	-.411	240	184	-.059	.104	.263	-.391	240	247	-.084	.105	.299	-.461
240	135	-.094	.108	.272	-.448	240	185	-.063	.107	.257	-.439	240	248	-.083	.107	.265	-.447
240	136	-.093	.105	.237	-.443	240	186	-.059	.103	.252	-.459	240	249	-.082	.104	.233	-.422
240	137	-.091	.111	.300	-.468	240	187	-.091	.100	.279	-.429	240	250	-.091	.110	.275	-.588
240	138	-.088	.106	.238	-.445	240	201	-.076	.123	.338	-.519	240	251	-.094	.116	.250	-.539
240	139	-.088	.105	.243	-.478	240	202	-.141	.133	.282	-.629	240	252	-.083	.117	.322	-.582
240	140	-.085	.102	.292	-.423	240	203	-.095	.134	.412	-.522	240	253	-.083	.121	.324	-.476
240	141	-.084	.103	.280	-.411	240	204	-.076	.115	.315	-.554	240	254	-.087	.114	.300	-.463
240	142	-.090	.107	.258	-.481	240	205	-.080	.120	.289	-.472	240	255	-.084	.104	.231	-.433
240	143	-.098	.109	.330	-.486	240	206	-.093	.122	.287	-.525	240	256	-.079	.103	.282	-.436
240	144	-.096	.115	.333	-.543	240	207	-.084	.115	.265	-.549	240	257	-.068	.109	.315	-.434
240	145	-.090	.109	.320	-.466	240	208	-.075	.119	.255	-.558	240	258	-.064	.109	.317	-.404
240	146	-.094	.110	.303	-.488	240	209	-.068	.111	.274	-.416	240	259	-.067	.115	.277	-.412
240	147	-.091	.116	.292	-.418	240	210	-.076	.120	.310	-.706	240	260	-.086	.112	.272	-.457
240	148	-.091	.112	.313	-.458	240	211	-.080	.121	.325	-.617	240	261	-.080	.105	.274	-.439
240	149	-.096	.110	.220	-.483	240	212	-.075	.111	.287	-.563	240	262	-.079	.107	.267	-.477
240	150	-.091	.110	.285	-.458	240	213	-.074	.112	.259	-.537	240	263	-.078	.109	.289	-.415
240	151	-.093	.114	.268	-.485	240	214	-.099	.115	.282	-.515	240	264	-.066	.110	.301	-.481
240	152	-.096	.101	.253	-.436	240	215	-.068	.106	.294	-.417	240	265	-.072	.118	.277	-.503
240	153	-.119	.116	.317	-.587	240	216	-.063	.110	.367	-.396	240	266	-.073	.102	.272	-.439
240	154	-.035	.109	.335	-.430	240	217	-.065	.112	.332	-.451	240	267	-.073	.114	.380	-.439
240	155	-.032	.111	.367	-.438	240	218	-.070	.115	.305	-.570	240	268	-.078	.104	.243	-.477
240	156	-.045	.107	.348	-.398	240	219	-.066	.107	.277	-.470	240	269	-.074	.106	.309	-.457

WD	TAP	CPMEAN	CPRMS	CPMAX	CPMIN	WD	TAP	CPMEAN	CPRMS	CPMAX	CPMIN	WD	TAP	CPMEAN	CPRMS	CPMAX	CPMIN
240	270	-.080	.107	.243	-.420	240	348	-.067	.108	.244	-.465	240	440	.017	.117	.426	-.415
240	271	-.069	.108	.317	-.447	240	349	-.102	.118	.334	-.506	240	441	-.004	.106	.401	-.333
240	272	-.078	.103	.298	-.491	240	350	-.078	.110	.292	-.445	240	442	-.031	.116	.607	-.385
240	301	-.151	.193	.633	-1.066	240	351	-.075	.108	.273	-.494	240	443	-.065	.122	.516	-.532
240	302	-.076	.154	.485	-1.021	240	352	-.096	.116	.259	-.492	240	444	-.028	.125	.368	-.383
240	303	-.111	.142	.343	-.656	240	353	-.090	.114	.273	-.536	240	445	.022	.124	.518	-.421
240	304	-.174	.151	.244	-.945	240	354	-.084	.114	.315	-.573	240	446	.032	.107	.421	-.352
240	305	-.159	.143	.357	-.688	240	355	-.083	.122	.330	-.541	240	447	.019	.108	.471	-.352
240	306	-.135	.123	.283	-.659	240	356	-.084	.123	.334	-.482	240	448	.005	.102	.387	-.383
240	307	-.117	.174	.549	-1.135	240	357	-.082	.114	.313	-.426	240	449	-.021	.112	.347	-.433
240	308	-.070	.135	.529	-.538	240	358	-.074	.112	.259	-.548	240	450	-.050	.105	.294	-.383
240	309	-.102	.122	.257	-.577	240	401	-.168	.174	.611	-1.012	240	451	-.068	.116	.382	-.490
240	310	-.150	.129	.231	-.769	240	402	-.154	.209	.663	-1.191	240	452	-.018	.112	.464	-.396
240	311	-.139	.137	.280	-.638	240	403	.131	.230	1.031	-.586	240	453	-.011	.108	.338	-.521
240	312	-.127	.121	.250	-.560	240	404	-.041	.162	.851	-.600	240	454	-.002	.106	.385	-.352
240	313	-.150	.167	.477	-.801	240	405	-.010	.173	.895	-.544	240	455	.007	.110	.342	-.344
240	314	-.098	.140	.542	-.928	240	406	-.004	.169	1.089	-.519	240	456	.001	.107	.377	-.394
240	315	-.112	.118	.270	-.567	240	407	-.001	.166	.766	-.463	240	457	-.020	.101	.321	-.317
240	316	-.122	.112	.216	-.545	240	408	.031	.207	1.270	-.544	240	458	-.045	.103	.357	-.349
240	317	-.124	.125	.304	-.722	240	409	.061	.212	1.145	-.451	240	459	-.074	.112	.274	-.529
240	318	-.127	.127	.285	-.928	240	410	.095	.216	.949	-.591	240	460	-.007	.106	.378	-.380
240	319	-.168	.139	.416	-.955	240	411	.055	.202	1.248	-.524	240	461	-.002	.109	.325	-.475
240	320	-.128	.130	.482	-.816	240	412	-.038	.128	.589	-.458	240	462	-.001	.110	.396	-.467
240	321	-.115	.116	.247	-.554	240	413	.006	.136	.902	-.452	240	463	-.018	.108	.303	-.372
240	322	-.122	.119	.263	-.540	240	414	.042	.145	.981	-.430	240	464	-.050	.109	.276	-.453
240	323	-.116	.118	.310	-.557	240	415	.073	.156	.737	-.388	240	465	-.069	.110	.266	-.479
240	324	-.118	.115	.228	-.601	240	416	.092	.167	.848	-.436	240	466	.025	.107	.422	-.355
240	325	-.150	.130	.278	-.797	240	417	.103	.193	1.241	-.381	240	467	.032	.112	.403	-.369
240	326	-.135	.125	.320	-.769	240	418	.055	.176	.961	-.425	240	468	.022	.106	.374	-.374
240	327	-.110	.115	.277	-.557	240	419	-.004	.154	.608	-.563	240	469	.015	.111	.413	-.345
240	328	-.127	.121	.220	-.545	240	420	-.040	.125	.660	-.410	240	470	-.005	.106	.391	-.384
240	329	-.123	.107	.243	-.483	240	421	.005	.129	.761	-.390	240	471	-.007	.106	.332	-.331
240	330	-.107	.108	.240	-.463	240	422	.048	.122	.455	-.400	240	472	-.008	.116	.377	-.393
240	331	-.149	.132	.233	-.823	240	423	.069	.124	.524	-.336	240	501	-.146	.129	.225	-.654
240	332	-.118	.130	.257	-.767	240	424	.055	.118	.587	-.341	240	502	-.147	.133	.310	-.700
240	333	-.111	.116	.272	-.491	240	425	.047	.136	.609	-.353	240	503	-.184	.151	.241	-.900
240	334	-.127	.073	.104	-.336	240	426	-.016	.121	.474	-.397	240	504	-.185	.155	.306	-1.272
240	335	-.120	.109	.193	-.503	240	427	-.050	.124	.418	-.495	240	505	-.152	.128	.269	-.681
240	336	-.111	.109	.253	-.498	240	428	-.013	.129	.827	-.454	240	506	-.152	.128	.262	-.817
240	337	-.126	.127	.272	-.587	240	429	.029	.123	.536	-.382	240	507	-.171	.139	.207	-1.181
240	338	-.105	.124	.280	-.591	240	430	.056	.119	.580	-.302	240	508	-.176	.133	.274	-.780
240	339	-.100	.108	.302	-.436	240	431	.059	.121	.469	-.356	240	509	-.148	.128	.271	-.820
240	340	-.123	.124	.255	-.676	240	432	.037	.111	.450	-.314	240	510	-.154	.128	.203	-.566
240	341	-.098	.111	.218	-.474	240	433	.013	.111	.426	-.366	240	511	-.168	.132	.303	-.785
240	342	-.098	.109	.275	-.444	240	434	-.034	.115	.357	-.410	240	512	-.173	.128	.286	-.676
240	343	-.102	.122	.329	-.554	240	435	-.059	.117	.386	-.453	240	513	-.146	.128	.257	-.630
240	344	-.101	.121	.264	-.558	240	436	-.023	.121	.484	-.492	240	514	-.147	.121	.242	-.644
240	345	-.091	.113	.284	-.547	240	437	.021	.123	.475	-.365	240	515	-.180	.135	.227	-.824
240	346	-.094	.117	.239	-.508	240	438	.045	.120	.436	-.333	240	516	-.190	.131	.249	-.856
240	347	-.094	.118	.340	-.493	240	439	.029	.108	.448	-.319	240	517	-.133	.126	.256	-.625

WD	TAP	CPMEAN	CPRMS	CPMAX	CPMIN	WD	TAP	CPMEAN	CPRMS	CPMAX	CPMIN	WD	TAP	CPMEAN	CPRMS	CPMAX	CPMIN
240	518	-.141	.122	.242	-.606	240	634	-.063	.102	.264	-.416	240	1114	-.062	.098	.353	-.406
240	519	-.197	.138	.210	-.937	240	801	-.072	.111	.259	-.502	240	1115	-.069	.092	.213	-.349
240	520	-.200	.133	.281	-.911	240	802	-.080	.113	.301	-.430	240	1116	-.066	.087	.211	-.397
240	521	-.136	.119	.269	-.517	240	803	-.066	.113	.266	-.442	240	1117	-.063	.088	.221	-.332
240	522	-.140	.115	.256	-.556	240	804	-.070	.106	.291	-.475	240	1118	-.070	.103	.300	-.400
240	523	-.191	.145	.224	-.734	240	805	-.063	.104	.294	-.351	240	1119	-.066	.101	.249	-.449
240	524	-.222	.141	.219	-.756	240	806	-.065	.103	.303	-.421	240	1120	-.062	.097	.255	-.493
240	525	-.105	.113	.291	-.550	240	807	-.070	.106	.266	-.379	240	1121	-.070	.101	.274	-.491
240	526	-.093	.109	.254	-.809	240	808	-.077	.100	.321	-.477	240	1122	-.067	.104	.290	-.494
240	527	-.114	.123	.264	-.614	240	809	-.064	.108	.326	-.536	240	1123	-.064	.102	.398	-.413
240	528	-.167	.133	.307	-.663	240	810	-.075	.114	.351	-.502	240	1124	-.067	.095	.283	-.424
240	529	-.123	.126	.239	-.534	240	811	-.107	.106	.223	-.448	240	1125	-.067	.093	.271	-.359
240	530	-.120	.111	.278	-.470	240	812	-.111	.107	.191	-.502	240	1126	-.066	.095	.217	-.406
240	531	-.098	.115	.332	-.495	240	813	-.109	.111	.249	-.484	240	1201	-.133	.103	.150	-.446
240	532	-.107	.114	.215	-.543	240	814	-.188	.122	.176	-.603	240	1202	-.111	.103	.220	-.450
240	533	-.080	.115	.298	-.467	240	815	-.138	.117	.274	-.553	240	1203	-.153	.105	.166	-.577
240	534	-.058	.125	.528	-.465	240	901	-.116	.144	.343	-.923	240	1204	-.114	.095	.228	-.442
240	601	-.109	.120	.291	-.763	240	902	-.225	.220	.315	-1.372	240	1205	-.106	.105	.256	-.495
240	602	-.108	.120	.291	-.501	240	903	-.160	.173	.342	-.868	240	1206	-.149	.114	.205	-.640
240	603	-.119	.127	.246	-.626	240	904	-.012	.128	.423	-.460	240	1207	-.139	.095	.161	-.461
240	604	-.118	.122	.340	-.565	240	905	-.055	.189	.788	-.791	240	1208	-.071	.093	.259	-.384
240	605	-.104	.119	.308	-.607	240	906	-.106	.133	.373	-.683	240	1209	-.095	.092	.175	-.366
240	606	-.109	.120	.300	-.560	240	907	-.249	.218	.305	-1.551	240	1210	-.064	.092	.294	-.358
240	607	-.107	.119	.403	-.594	240	908	-.120	.134	.517	-.647	240	1211	-.161	.094	.209	-.456
240	608	-.108	.113	.230	-.606	240	909	-.078	.119	.304	-.528	240	1212	-.097	.094	.264	-.464
240	609	-.106	.110	.245	-.482	240	910	-.107	.128	.262	-.571	240	1213	-.096	.092	.215	-.367
240	610	-.105	.114	.262	-.484	240	911	-.178	.159	.332	-1.174	240	1214	-.021	.108	.333	-.416
240	611	-.106	.111	.250	-.640	240	912	-.148	.145	.380	-.857	240	1215	-.115	.097	.168	-.487
240	612	-.110	.118	.274	-.714	240	913	-.085	.117	.290	-.614	240	1216	-.105	.093	.199	-.422
240	613	-.109	.116	.308	-.477	240	914	-.112	.124	.266	-.686	240	1217	-.058	.089	.210	-.334
240	614	-.106	.114	.264	-.475	240	915	-.132	.133	.332	-.596	240	1218	-.063	.097	.251	-.368
240	615	-.106	.105	.190	-.457	240	916	-.064	.119	.356	-.652	240	1219	-.058	.093	.314	-.339
240	616	-.122	.116	.303	-.603	240	917	-.075	.120	.401	-.483	240	1220	-.069	.100	.249	-.393
240	617	-.104	.103	.271	-.473	240	918	-.059	.126	.419	-.455	240	1221	-.092	.091	.184	-.388
240	618	-.101	.103	.264	-.494	240	919	-.117	.137	.385	-.686	240	1222	-.057	.096	.262	-.375
240	619	-.107	.106	.227	-.527	240	920	-.170	.151	.251	-1.015	240	1223	-.061	.095	.261	-.360
240	620	-.111	.108	.213	-.450	240	921	-.138	.148	.399	-.834	240	1224	.017	.100	.314	-.325
240	621	-.086	.109	.249	-.448	240	1101	-.122	.105	.205	-.478	240	1225	-.089	.108	.430	-.425
240	622	-.081	.106	.254	-.502	240	1102	-.127	.108	.236	-.472	240	1226	-.058	.094	.243	-.487
240	623	-.092	.104	.259	-.482	240	1103	-.118	.107	.334	-.452	240	1227	-.059	.094	.225	-.347
240	624	-.107	.117	.257	-.521	240	1104	-.074	.094	.267	-.427	240	1228	-.060	.091	.238	-.398
240	625	-.077	.104	.337	-.482	240	1105	-.076	.089	.248	-.340	240	1229	-.067	.090	.215	-.333
240	626	-.076	.108	.298	-.457	240	1106	-.081	.104	.287	-.390	240	1301	-.040	.101	.339	-.376
240	627	-.088	.107	.291	-.460	240	1107	-.073	.094	.203	-.423	240	1302	.041	.116	.550	-.332
240	628	-.082	.110	.293	-.495	240	1108	-.069	.098	.309	-.419	240	1303	-.009	.115	.386	-.379
240	629	-.062	.113	.336	-.452	240	1109	-.062	.097	.297	-.363	240	1304	-.097	.100	.186	-.460
240	630	-.071	.116	.309	-.593	240	1110	-.049	.100	.290	-.390	240	1305	-.028	.099	.345	-.398
240	631	-.064	.118	.313	-.465	240	1111	-.057	.098	.243	-.357	240	1306	-.031	.100	.328	-.362
240	632	-.067	.107	.252	-.462	240	1112	-.069	.092	.249	-.341	240	1307	-.079	.102	.256	-.454
240	633	-.062	.102	.274	-.389	240	1113	-.069	.093	.265	-.352	240	1308	-.108	.106	.243	-.445

WD	TAP	CPMEAN	CPRMS	CPMAX	CPMIN	WD	TAP	CPMEAN	CPRMS	CPMAX	CPMIN	WD	TAP	CPMEAN	CPRMS	CPMAX	CPMIN
240	1309	-.086	.095	.244	-.387	240	1429	-.050	.090	.225	-.361	240	1944	-.088	.079	.172	-.314
240	1311	-.011	.102	.437	-.376	240	1430	-.044	.098	.302	-.368	240	1945	-.095	.102	.200	-.445
240	1312	-.019	.095	.342	-.343	240	1431	-.061	.095	.284	-.382	240	1946	-.078	.099	.225	-.388
240	1313	-.041	.093	.290	-.387	240	1432	-.083	.100	.245	-.405	240	1947	-.103	.101	.284	-.429
240	1314	-.015	.087	.239	-.276	240	1433	-.084	.096	.225	-.475	240	1948	-.101	.109	.264	-.479
240	1315	-.100	.096	.183	-.463	240	1434	-.168	.118	.145	-.614	240	1949	-.101	.096	.334	-.468
240	1316	-.081	.101	.220	-.462	240	1435	-.156	.120	.196	-.599	240	1950	-.099	.094	.174	-.449
240	1317	-.003	.102	.334	-.419	240	1901	-.071	.089	.251	-.364	240	1951	-.119	.097	.236	-.508
240	1318	-.040	.101	.356	-.447	240	1902	.067	.087	.352	-.241	240	1952	-.117	.104	.342	-.473
240	1319	-.010	.101	.446	-.352	240	1903	.172	.083	.474	-.125	240	1953	-.127	.108	.213	-.545
240	1320	.002	.094	.337	-.371	240	1904	-.026	.094	.315	-.308	240	1954	-.125	.103	.219	-.479
240	1321	-.008	.091	.345	-.287	240	1905	.009	.096	.285	-.268	240	1955	-.113	.095	.194	-.415
240	1322	-.089	.096	.225	-.461	240	1906	-.060	.095	.277	-.395	240	1956	-.107	.095	.190	-.513
240	1323	-.064	.096	.187	-.425	240	1907	-.073	.092	.210	-.367	240	1957	-.128	.104	.163	-.471
240	1324	.011	.095	.362	-.293	240	1908	-.085	.093	.202	-.462	240	1958	-.116	.096	.240	-.454
240	1325	.011	.096	.337	-.328	240	1909	-.074	.090	.189	-.367	240	1959	-.112	.107	.255	-.431
240	1326	.025	.099	.356	-.295	240	1910	-.075	.092	.259	-.431	240	1960	-.112	.107	.232	-.494
240	1327	.037	.111	.446	-.300	240	1911	-.068	.103	.283	-.382	240	1961	-.127	.092	.179	-.426
240	1328	-.033	.096	.310	-.366	240	1912	-.072	.104	.298	-.430	240	1962	-.034	.094	.302	-.315
240	1329	-.066	.094	.250	-.357	240	1913	-.081	.090	.227	-.395	240	1963	-.040	.087	.244	-.338
240	1330	-.075	.108	.268	-.434	240	1914	-.065	.085	.262	-.290	240	1964	-.056	.102	.266	-.409
240	1331	-.058	.104	.246	-.413	240	1915	-.062	.088	.222	-.327	240	1965	-.129	.093	.190	-.423
240	1401	-.129	.115	.264	-.470	240	1916	-.079	.101	.222	-.443	240	1966	-.119	.096	.224	-.412
240	1402	-.164	.103	.193	-.564	240	1917	-.082	.090	.219	-.387	240	1967	-.107	.103	.263	-.462
240	1403	-.189	.109	.144	-.580	240	1918	-.079	.092	.235	-.343	240	1968	-.103	.092	.192	-.372
240	1404	-.099	.105	.223	-.518	240	1919	-.079	.101	.269	-.441	250	101	-.098	.126	.298	-.536
240	1405	-.101	.095	.214	-.463	240	1920	-.061	.089	.227	-.311	250	102	-.113	.144	.384	-.688
240	1406	-.165	.106	.133	-.546	240	1921	-.073	.100	.218	-.393	250	103	-.166	.166	.414	-.793
240	1407	-.118	.117	.269	-.539	240	1922	-.075	.098	.213	-.367	250	104	-.032	.144	.609	-.638
240	1408	-.067	.097	.303	-.366	240	1923	-.072	.097	.286	-.420	250	105	-.021	.142	.534	-.737
240	1409	-.082	.101	.252	-.396	240	1924	-.078	.107	.274	-.411	250	106	-.050	.146	.747	-.586
240	1410	-.077	.088	.210	-.370	240	1925	-.098	.097	.334	-.526	250	107	-.077	.138	.367	-.840
240	1411	-.064	.097	.290	-.384	240	1926	-.070	.091	.229	-.413	250	108	-.123	.137	.283	-1.034
240	1412	-.071	.095	.278	-.387	240	1927	-.079	.092	.248	-.377	250	109	-.127	.125	.352	-.610
240	1413	-.108	.107	.243	-.457	240	1928	-.074	.098	.298	-.375	250	110	-.129	.123	.268	-.571
240	1414	-.084	.106	.430	-.467	240	1929	-.072	.100	.216	-.348	250	111	-.117	.131	.238	-.541
240	1415	-.080	.095	.209	-.525	240	1930	-.075	.099	.253	-.427	250	112	-.117	.123	.302	-.568
240	1416	-.061	.094	.223	-.350	240	1931	-.070	.091	.219	-.359	250	113	-.126	.125	.273	-.695
240	1417	-.068	.088	.248	-.333	240	1932	-.058	.083	.193	-.390	250	114	-.067	.121	.377	-.500
240	1418	-.100	.105	.243	-.453	240	1933	-.073	.095	.211	-.379	250	115	-.068	.126	.352	-.468
240	1419	-.091	.100	.214	-.472	240	1934	-.071	.093	.288	-.403	250	116	-.079	.112	.377	-.496
240	1420	-.137	.114	.211	-.512	240	1935	-.073	.105	.296	-.393	250	117	-.105	.121	.357	-.583
240	1421	-.124	.108	.240	-.548	240	1936	-.083	.107	.267	-.453	250	118	-.109	.121	.298	-.630
240	1422	-.085	.095	.224	-.369	240	1937	-.089	.092	.222	-.406	250	119	-.117	.125	.307	-.590
240	1423	-.066	.097	.230	-.400	240	1938	-.072	.094	.301	-.380	250	120	-.105	.109	.258	-.458
240	1424	-.057	.093	.281	-.381	240	1939	-.067	.089	.229	-.332	250	121	-.107	.109	.243	-.433
240	1425	-.065	.093	.227	-.363	240	1940	-.076	.104	.235	-.455	250	122	-.117	.113	.265	-.660
240	1426	-.101	.101	.193	-.448	240	1941	-.071	.092	.263	-.398	250	123	-.124	.113	.227	-.511
240	1427	-.058	.096	.318	-.355	240	1942	-.075	.094	.254	-.345	250	124	-.097	.110	.293	-.510
240	1428	-.057	.101	.289	-.369	240	1943	-.090	.099	.269	-.438	250	125	-.094	.105	.342	-.386

WD	TAP	CPMEAN	CPRMS	CPMAX	CPMIN	WD	TAP	CPMEAN	CPRMS	CPMAX	CPMIN	WD	TAP	CPMEAN	CPRMS	CPMAX	CPMIN
250	126	-.099	.103	.256	-.407	250	176	-.071	.101	.374	-.473	250	239	-.066	.113	.319	-.451
250	127	-.090	.106	.230	-.483	250	177	-.064	.098	.285	-.372	250	240	-.057	.099	.261	-.369
250	128	-.091	.113	.254	-.515	250	178	-.077	.109	.264	-.438	250	241	-.059	.097	.267	-.381
250	129	-.095	.104	.222	-.529	250	179	-.086	.109	.248	-.489	250	242	-.073	.101	.283	-.512
250	130	-.091	.108	.278	-.470	250	180	-.067	.105	.301	-.418	250	243	-.072	.104	.290	-.441
250	131	-.099	.115	.296	-.522	250	181	-.066	.100	.270	-.391	250	244	-.064	.105	.231	-.597
250	132	-.104	.110	.286	-.470	250	182	-.069	.097	.315	-.399	250	245	-.060	.104	.287	-.411
250	133	-.111	.126	.266	-.601	250	183	-.086	.101	.268	-.452	250	246	-.085	.106	.297	-.482
250	134	-.090	.114	.423	-.549	250	184	-.073	.107	.275	-.463	250	247	-.084	.111	.320	-.434
250	135	-.091	.117	.583	-.561	250	185	-.063	.099	.329	-.449	250	248	-.084	.108	.289	-.468
250	136	-.092	.113	.318	-.520	250	186	-.060	.099	.243	-.429	250	249	-.085	.102	.219	-.423
250	137	-.090	.119	.389	-.542	250	187	-.089	.103	.270	-.428	250	250	-.089	.106	.291	-.409
250	138	-.091	.110	.271	-.464	250	201	-.081	.112	.235	-.481	250	251	-.096	.101	.241	-.397
250	139	-.086	.109	.269	-.522	250	202	-.145	.125	.320	-.656	250	252	-.087	.102	.240	-.470
250	140	-.092	.115	.264	-.490	250	203	-.105	.130	.351	-.599	250	253	-.087	.108	.273	-.429
250	141	-.083	.113	.369	-.453	250	204	-.086	.115	.241	-.496	250	254	-.087	.117	.260	-.468
250	142	-.089	.110	.310	-.493	250	205	-.082	.112	.256	-.520	250	255	-.095	.107	.230	-.491
250	143	-.100	.120	.219	-.588	250	206	-.091	.119	.275	-.486	250	256	-.076	.109	.356	-.400
250	144	-.083	.120	.448	-.498	250	207	-.072	.113	.304	-.465	250	257	-.073	.108	.255	-.462
250	145	-.072	.123	.549	-.503	250	208	-.066	.123	.337	-.544	250	258	-.080	.112	.361	-.479
250	146	-.098	.111	.266	-.475	250	209	-.069	.118	.359	-.470	250	259	-.081	.104	.291	-.462
250	147	-.097	.112	.286	-.491	250	210	-.078	.116	.282	-.491	250	260	-.085	.119	.256	-.542
250	148	-.094	.117	.251	-.512	250	211	-.082	.127	.346	-.560	250	261	-.084	.099	.262	-.397
250	149	-.097	.114	.418	-.466	250	212	-.082	.113	.233	-.535	250	262	-.083	.103	.281	-.458
250	150	-.093	.122	.296	-.518	250	213	-.074	.113	.298	-.527	250	263	-.082	.105	.283	-.405
250	151	-.099	.104	.193	-.456	250	214	-.096	.106	.260	-.453	250	264	-.073	.102	.317	-.452
250	152	-.097	.118	.320	-.517	250	215	-.066	.114	.335	-.454	250	265	-.078	.105	.257	-.412
250	153	-.122	.114	.356	-.528	250	216	-.065	.105	.287	-.451	250	266	-.079	.107	.265	-.399
250	154	-.034	.124	.617	-.900	250	217	-.070	.117	.290	-.438	250	267	-.077	.096	.278	-.428
250	155	-.031	.117	.377	-.419	250	218	-.075	.115	.287	-.443	250	268	-.084	.109	.256	-.404
250	156	-.050	.114	.453	-.468	250	219	-.079	.119	.258	-.532	250	269	-.080	.104	.256	-.425
250	157	-.069	.121	.291	-.478	250	220	-.073	.106	.285	-.436	250	270	-.068	.110	.370	-.463
250	158	-.087	.118	.284	-.480	250	221	-.064	.112	.315	-.448	250	271	-.075	.101	.304	-.425
250	159	-.116	.111	.232	-.542	250	222	-.066	.111	.251	-.473	250	272	-.083	.100	.231	-.449
250	160	-.121	.110	.205	-.478	250	223	-.065	.107	.386	-.433	250	301	-.225	.199	.469	-1.235
250	161	-.126	.117	.261	-.513	250	224	-.059	.116	.340	-.431	250	302	-.138	.153	.365	-.866
250	162	-.118	.110	.252	-.502	250	225	-.065	.100	.230	-.428	250	303	-.137	.141	.434	-.723
250	163	-.121	.113	.273	-.497	250	226	-.063	.113	.285	-.431	250	304	-.160	.136	.335	-1.036
250	164	-.071	.109	.247	-.427	250	227	-.062	.107	.295	-.438	250	305	-.140	.129	.302	-.725
250	165	-.068	.118	.330	-.483	250	228	-.072	.105	.263	-.401	250	306	-.130	.123	.338	-.626
250	166	-.057	.103	.303	-.377	250	229	-.066	.100	.280	-.381	250	307	-.189	.162	.494	-1.095
250	167	-.055	.102	.300	-.368	250	230	-.064	.103	.330	-.391	250	308	-.144	.145	.407	-.791
250	168	-.072	.104	.310	-.657	250	231	-.062	.112	.324	-.419	250	309	-.127	.132	.383	-.735
250	169	-.089	.105	.289	-.458	250	232	-.063	.112	.255	-.412	250	310	-.135	.125	.431	-.584
250	170	-.110	.107	.232	-.480	250	233	-.065	.103	.283	-.426	250	311	-.129	.121	.327	-.559
250	171	-.166	.118	.259	-.758	250	234	-.065	.101	.248	-.453	250	312	-.123	.119	.262	-.559
250	172	-.209	.129	.201	-.667	250	235	-.074	.111	.319	-.421	250	313	-.197	.151	.262	-.805
250	173	-.269	.156	.150	-.935	250	236	-.064	.106	.354	-.417	250	314	-.165	.147	.453	-.769
250	174	-.078	.104	.257	-.428	250	237	-.076	.107	.260	-.421	250	315	-.130	.132	.305	-.636
250	175	-.065	.097	.249	-.449	250	238	-.067	.107	.245	-.399	250	316	-.113	.114	.254	-.466

WD	TAP	CPMEAN	CPRMS	CPMAX	CPMIN	WD	TAP	CPMEAN	CPRMS	CPMAX	CPMIN	WD	TAP	CPMEAN	CPRMS	CPMAX	CPMIN
250	317	-.113	.120	.311	-.653	250	409	.007	.175	.920	-.543	250	459	-.085	.107	.312	-.472
250	318	-.115	.116	.274	-.571	250	410	-.002	.171	.706	-.663	250	460	.011	.106	.369	-.339
250	319	-.189	.144	.195	-.752	250	411	-.050	.153	.621	-.655	250	461	.024	.103	.391	-.360
250	320	-.151	.137	.303	-.658	250	412	-.010	.151	.784	-.453	250	462	.016	.104	.399	-.379
250	321	-.132	.126	.277	-.818	250	413	.056	.169	.921	-.497	250	463	-.015	.107	.382	-.421
250	322	-.111	.120	.230	-.902	250	414	.109	.174	.890	-.350	250	464	-.049	.099	.327	-.439
250	323	-.112	.115	.328	-.687	250	415	.118	.177	1.025	-.487	250	465	-.071	.104	.253	-.481
250	324	-.109	.116	.259	-.572	250	416	.085	.166	.774	-.596	250	466	.046	.108	.509	-.328
250	325	-.169	.125	.279	-.613	250	417	.055	.144	.712	-.350	250	467	.045	.112	.485	-.413
250	326	-.159	.135	.255	-.663	250	418	-.013	.140	.538	-.530	250	468	.040	.111	.374	-.305
250	327	-.127	.130	.327	-.787	250	419	-.076	.138	.548	-.545	250	469	.022	.112	.446	-.429
250	328	-.113	.126	.303	-.607	250	420	-.012	.149	.690	-.514	250	470	.001	.101	.311	-.303
250	329	-.101	.109	.240	-.491	250	421	.042	.148	.809	-.361	250	471	.006	.106	.364	-.373
250	330	-.109	.119	.243	-.736	250	422	.106	.146	.711	-.304	250	472	-.002	.106	.328	-.392
250	331	-.153	.125	.288	-.625	250	423	.099	.140	.814	-.332	250	501	-.174	.142	.223	-.889
250	332	-.150	.130	.255	-.955	250	424	.082	.135	.654	-.402	250	502	-.172	.136	.324	-.869
250	333	-.112	.119	.291	-.501	250	425	.033	.126	.514	-.374	250	503	-.222	.161	.290	-1.267
250	334	-.103	.071	.087	-.348	250	426	-.038	.128	.482	-.497	250	504	-.257	.195	.509	-1.736
250	335	-.104	.113	.267	-.622	250	427	-.085	.132	.379	-.670	250	505	-.189	.141	.283	-.848
250	336	-.102	.110	.277	-.649	250	428	-.008	.135	.484	-.498	250	506	-.187	.144	.221	-.933
250	337	-.128	.113	.265	-.506	250	429	.045	.136	.742	-.401	250	507	-.216	.158	.178	-.925
250	338	-.123	.113	.180	-.679	250	430	.075	.132	.541	-.473	250	508	-.221	.155	.312	-.937
250	339	-.114	.112	.253	-.574	250	431	.084	.120	.554	-.294	250	509	-.169	.143	.269	-.827
250	340	-.105	.120	.344	-.480	250	432	.045	.131	.558	-.461	250	510	-.175	.130	.238	-.832
250	341	-.097	.104	.248	-.426	250	433	.005	.117	.472	-.368	250	511	-.207	.163	.257	-1.045
250	342	-.094	.119	.281	-.475	250	434	-.046	.123	.377	-.557	250	512	-.217	.159	.209	-.976
250	343	-.120	.122	.269	-.520	250	435	-.087	.121	.395	-.667	250	513	-.151	.137	.271	-.723
250	344	-.119	.113	.231	-.552	250	436	-.011	.121	.415	-.444	250	514	-.154	.134	.397	-.644
250	345	-.109	.108	.262	-.583	250	437	.025	.126	.511	-.385	250	515	-.190	.145	.213	-1.041
250	346	-.097	.109	.252	-.459	250	438	.060	.116	.427	-.361	250	516	-.207	.148	.243	-1.246
250	347	-.095	.121	.278	-.512	250	439	.060	.109	.455	-.322	250	517	-.132	.126	.220	-.750
250	348	-.101	.113	.233	-.512	250	440	.022	.119	.426	-.385	250	518	-.152	.135	.192	-.721
250	349	-.115	.104	.203	-.521	250	441	-.010	.111	.360	-.356	250	519	-.197	.143	.259	-.829
250	350	-.094	.107	.241	-.442	250	442	-.055	.117	.314	-.462	250	520	-.201	.137	.211	-.932
250	351	-.090	.104	.248	-.497	250	443	-.094	.119	.317	-.511	250	521	-.131	.130	.290	-.667
250	352	-.093	.114	.262	-.495	250	444	-.009	.118	.403	-.371	250	522	-.139	.127	.308	-.569
250	353	-.092	.110	.258	-.502	250	445	.038	.117	.450	-.345	250	523	-.190	.135	.317	-.763
250	354	-.090	.102	.253	-.447	250	446	.056	.110	.450	-.275	250	524	-.208	.135	.238	-.700
250	355	-.089	.107	.361	-.497	250	447	.037	.115	.423	-.412	250	525	-.103	.106	.298	-.463
250	356	-.088	.101	.319	-.432	250	448	.004	.111	.389	-.365	250	526	-.071	.104	.261	-.442
250	357	-.084	.110	.309	-.524	250	449	-.026	.100	.344	-.342	250	527	-.090	.128	.349	-.519
250	358	-.084	.111	.293	-.461	250	450	-.062	.104	.298	-.478	250	528	-.145	.145	.312	-.750
250	401	-.163	.214	1.061	-.916	250	451	-.091	.107	.220	-.451	250	529	-.105	.116	.280	-.503
250	402	-.158	.199	.877	-1.060	250	452	-.015	.110	.411	-.381	250	530	-.110	.118	.296	-.531
250	403	.041	.181	.845	-.737	250	453	-.012	.116	.385	-.430	250	531	-.084	.104	.367	-.439
250	404	-.024	.185	.908	-.636	250	454	.008	.112	.365	-.336	250	532	-.097	.117	.262	-.516
250	405	.021	.188	.853	-.607	250	455	.018	.106	.387	-.340	250	533	-.073	.114	.319	-.468
250	406	.035	.196	1.058	-.557	250	456	.013	.104	.346	-.328	250	534	-.021	.130	.369	-.536
250	407	.029	.190	.869	-.571	250	457	-.021	.104	.379	-.372	250	601	-.117	.124	.269	-.797
250	408	.035	.192	.893	-.579	250	458	-.052	.112	.348	-.386	250	602	-.119	.128	.267	-.765

WD	TAP	CPMEAN	CPRMS	CPMAX	CPMIN	WD	TAP	CPMEAN	CPRMS	CPMAX	CPMIN	WD	TAP	CPMEAN	CPRMS	CPMAX	CPMIN
250	603	-.129	.133	.391	-.753	250	904	.001	.118	.419	-.406	250	1207	-.155	.107	.180	-.516
250	604	-.132	.129	.208	-.745	250	905	-.061	.198	.744	-1.117	250	1208	-.071	.098	.277	-.423
250	605	-.111	.123	.256	-.579	250	906	-.101	.125	.283	-.518	250	1209	-.088	.106	.246	-.430
250	606	-.112	.115	.216	-.756	250	907	-.242	.196	.260	-1.276	250	1210	-.073	.097	.229	-.415
250	607	-.113	.120	.253	-.652	250	908	-.113	.141	.440	-.583	250	1211	-.173	.093	.183	-.467
250	608	-.127	.117	.266	-.691	250	909	-.050	.127	.359	-.483	250	1212	-.112	.092	.249	-.431
250	609	-.102	.109	.242	-.525	250	910	-.100	.125	.395	-.690	250	1213	-.103	.091	.190	-.377
250	610	-.106	.110	.306	-.472	250	911	-.199	.161	.345	-1.196	250	1214	-.024	.117	.356	-.576
250	611	-.106	.101	.207	-.651	250	912	-.199	.182	.399	-1.154	250	1215	-.111	.109	.296	-.496
250	612	-.109	.106	.332	-.520	250	913	-.068	.125	.455	-.530	250	1216	-.100	.097	.229	-.424
250	613	-.103	.099	.234	-.441	250	914	-.098	.127	.402	-.555	250	1217	-.069	.092	.252	-.373
250	614	-.103	.112	.298	-.513	250	915	-.145	.167	.581	-.768	250	1218	-.067	.094	.234	-.413
250	615	-.115	.113	.227	-.850	250	916	-.028	.127	.477	-.394	250	1219	-.073	.106	.265	-.490
250	616	-.113	.113	.253	-.674	250	917	-.065	.123	.474	-.728	250	1220	-.080	.096	.232	-.494
250	617	-.100	.101	.266	-.409	250	918	-.039	.134	.545	-.520	250	1221	-.105	.097	.224	-.393
250	618	-.100	.095	.210	-.417	250	919	-.116	.165	.477	-.897	250	1222	-.078	.099	.247	-.418
250	619	-.111	.105	.251	-.590	250	920	-.230	.197	.486	-1.221	250	1223	-.074	.096	.229	-.372
250	620	-.126	.117	.295	-.711	250	921	-.171	.176	.400	-.990	250	1224	.028	.099	.465	-.234
250	621	-.091	.100	.280	-.497	250	1101	-.119	.095	.239	-.449	250	1225	-.103	.099	.209	-.421
250	622	-.092	.100	.221	-.502	250	1102	-.142	.110	.295	-.536	250	1226	-.068	.093	.214	-.393
250	623	-.117	.110	.287	-.496	250	1103	-.135	.103	.183	-.489	250	1227	-.072	.098	.263	-.419
250	624	-.129	.121	.284	-.619	250	1104	-.104	.100	.214	-.467	250	1228	-.070	.098	.275	-.416
250	625	-.088	.103	.241	-.450	250	1105	-.099	.100	.285	-.496	250	1229	-.071	.104	.265	-.395
250	626	-.092	.112	.324	-.502	250	1106	-.112	.106	.306	-.482	250	1301	-.050	.102	.243	-.411
250	627	-.096	.100	.200	-.444	250	1107	-.097	.101	.235	-.408	250	1302	.034	.110	.455	-.337
250	628	-.099	.105	.230	-.467	250	1108	-.090	.110	.269	-.470	250	1303	-.006	.111	.433	-.414
250	629	-.083	.104	.242	-.435	250	1109	-.087	.095	.188	-.394	250	1304	-.104	.104	.252	-.405
250	630	-.088	.104	.287	-.461	250	1110	-.063	.092	.204	-.410	250	1305	-.024	.120	.364	-.371
250	631	-.071	.107	.327	-.446	250	1111	-.064	.098	.248	-.378	250	1306	-.031	.100	.291	-.332
250	632	-.074	.114	.267	-.443	250	1112	-.091	.095	.217	-.420	250	1307	-.073	.095	.208	-.390
250	633	-.072	.096	.295	-.406	250	1113	-.091	.096	.207	-.395	250	1308	-.111	.107	.280	-.445
250	634	-.078	.100	.288	-.414	250	1114	-.083	.099	.264	-.476	250	1309	-.091	.096	.239	-.447
250	801	-.084	.102	.308	-.436	250	1115	-.084	.096	.230	-.444	250	1311	-.017	.104	.397	-.411
250	802	-.087	.106	.264	-.424	250	1116	-.090	.102	.217	-.423	250	1312	-.007	.099	.325	-.351
250	803	-.067	.106	.296	-.403	250	1117	-.074	.097	.259	-.397	250	1313	-.033	.106	.322	-.411
250	804	-.074	.103	.312	-.464	250	1118	-.093	.106	.305	-.455	250	1314	-.003	.098	.349	-.325
250	805	-.077	.103	.211	-.452	250	1119	-.089	.103	.236	-.417	250	1315	-.112	.104	.182	-.485
250	806	-.080	.102	.223	-.481	250	1120	-.084	.112	.288	-.486	250	1316	-.086	.104	.265	-.434
250	807	-.079	.101	.237	-.396	250	1121	-.075	.104	.261	-.428	250	1317	.008	.115	.384	-.408
250	808	-.088	.089	.176	-.406	250	1122	-.082	.107	.252	-.454	250	1318	-.041	.106	.269	-.394
250	809	-.087	.107	.258	-.465	250	1123	-.087	.098	.260	-.421	250	1319	-.008	.095	.343	-.342
250	810	-.067	.098	.316	-.406	250	1124	-.091	.100	.232	-.464	250	1320	.014	.098	.391	-.300
250	811	-.100	.112	.303	-.481	250	1125	-.078	.102	.332	-.482	250	1321	.002	.102	.398	-.394
250	812	-.104	.112	.226	-.452	250	1126	-.084	.108	.374	-.423	250	1322	-.102	.108	.377	-.409
250	813	-.111	.104	.282	-.517	250	1201	-.135	.092	.247	-.444	250	1323	-.071	.102	.271	-.357
250	814	-.167	.131	.487	-.690	250	1202	-.114	.110	.305	-.435	250	1324	.030	.112	.383	-.300
250	815	-.134	.112	.197	-.544	250	1203	-.142	.104	.251	-.492	250	1325	.019	.096	.349	-.243
250	901	-.102	.124	.242	-.615	250	1204	-.130	.106	.169	-.468	250	1326	.033	.095	.388	-.311
250	902	-.214	.190	.280	-1.368	250	1205	-.113	.116	.288	-.533	250	1327	.058	.108	.499	-.316
250	903	-.130	.143	.407	-.690	250	1206	-.152	.113	.279	-.514	250	1328	-.045	.100	.307	-.386

WD	TAP	CPMEAN	CPRMS	CPMAX	CPMIN	WD	TAP	CPMEAN	CPRMS	CPMAX	CPMIN	WD	TAP	CPMEAN	CPRMS	CPMAX	CPMIN
250	1329	-.071	.096	.235	-.372	250	1913	-.087	.095	.225	-.441	250	1963	-.044	.091	.225	-.338
250	1330	-.053	.106	.292	-.400	250	1914	-.085	.084	.209	-.320	250	1964	-.054	.098	.292	-.353
250	1331	-.042	.107	.296	-.403	250	1915	-.079	.094	.217	-.407	250	1965	-.131	.099	.187	-.504
250	1401	-.118	.100	.361	-.475	250	1916	-.090	.097	.264	-.373	250	1966	-.124	.090	.187	-.425
250	1402	-.179	.100	.213	-.492	250	1917	-.093	.094	.205	-.408	250	1967	-.110	.095	.182	-.435
250	1403	-.159	.116	.366	-.551	250	1918	-.090	.086	.228	-.344	250	1968	-.107	.097	.204	-.399
250	1404	-.075	.119	.330	-.497	250	1919	-.090	.096	.205	-.397	260	101	-.102	.129	.436	-.925
250	1405	-.122	.105	.151	-.569	250	1920	-.070	.094	.248	-.360	260	102	-.120	.144	.352	-.935
250	1406	-.143	.117	.312	-.526	250	1921	-.092	.098	.270	-.563	260	103	-.174	.168	.380	-.925
250	1407	-.083	.115	.258	-.526	250	1922	-.093	.090	.278	-.410	260	104	-.024	.147	.845	-.621
250	1408	-.065	.115	.400	-.492	250	1923	-.090	.096	.208	-.433	260	105	-.013	.149	.658	-.465
250	1409	-.100	.096	.219	-.481	250	1924	-.087	.094	.233	-.507	260	106	-.040	.141	.476	-1.064
250	1410	-.088	.095	.193	-.388	250	1925	-.121	.099	.148	-.434	260	107	-.092	.144	.509	-.801
250	1411	-.076	.102	.258	-.417	250	1926	-.087	.089	.176	-.379	260	108	-.125	.150	.456	-1.233
250	1412	-.057	.100	.281	-.364	250	1927	-.096	.094	.198	-.456	260	109	-.132	.133	.238	-.859
250	1413	-.073	.117	.396	-.399	250	1928	-.089	.104	.231	-.434	260	110	-.130	.131	.266	-.750
250	1414	-.102	.096	.183	-.408	250	1929	-.089	.093	.230	-.442	260	111	-.127	.118	.201	-.507
250	1415	-.091	.096	.214	-.473	250	1930	-.094	.094	.227	-.406	260	112	-.132	.129	.249	-.581
250	1416	-.064	.100	.310	-.443	250	1931	-.072	.085	.175	-.374	260	113	-.131	.128	.352	-.594
250	1417	-.059	.097	.270	-.373	250	1932	-.067	.079	.206	-.340	260	114	-.055	.133	.638	-.510
250	1418	-.075	.115	.443	-.443	250	1933	-.098	.094	.296	-.404	260	115	-.038	.147	.711	-.492
250	1419	-.095	.106	.289	-.422	250	1934	-.092	.101	.269	-.412	260	116	-.065	.132	.812	-.576
250	1420	-.105	.125	.487	-.506	250	1935	-.093	.098	.257	-.487	260	117	-.082	.121	.590	-.566
250	1421	-.084	.135	.412	-.500	250	1936	-.092	.099	.271	-.486	260	118	-.100	.126	.392	-.629
250	1422	-.097	.094	.213	-.372	250	1937	-.097	.099	.205	-.484	260	119	-.111	.123	.369	-.535
250	1423	-.062	.108	.329	-.453	250	1938	-.079	.091	.315	-.384	260	120	-.116	.120	.331	-.538
250	1424	-.053	.096	.298	-.430	250	1939	-.077	.095	.211	-.401	260	121	-.113	.110	.226	-.482
250	1425	-.052	.099	.320	-.417	250	1940	-.084	.103	.277	-.401	260	122	-.120	.118	.271	-.520
250	1426	-.079	.104	.308	-.451	250	1941	-.089	.096	.220	-.456	260	123	-.124	.121	.258	-.705
250	1427	-.070	.109	.287	-.492	250	1942	-.094	.088	.209	-.453	260	124	-.084	.130	.496	-.570
250	1428	-.072	.097	.247	-.464	250	1943	-.098	.092	.181	-.390	260	125	-.086	.125	.392	-.522
250	1429	-.055	.098	.233	-.358	250	1944	-.104	.086	.168	-.377	260	126	-.090	.119	.365	-.489
250	1430	-.041	.103	.305	-.415	250	1945	-.101	.100	.247	-.513	260	127	-.091	.107	.265	-.452
250	1431	-.045	.101	.251	-.387	250	1946	-.089	.094	.293	-.417	260	128	-.092	.123	.358	-.512
250	1432	-.072	.099	.390	-.364	250	1947	-.106	.099	.170	-.461	260	129	-.096	.116	.367	-.499
250	1433	-.086	.113	.302	-.495	250	1948	-.100	.097	.224	-.486	260	130	-.105	.113	.358	-.492
250	1434	-.121	.117	.300	-.513	250	1949	-.119	.097	.165	-.460	260	131	-.099	.118	.340	-.504
250	1435	-.154	.120	.188	-.668	250	1950	-.116	.091	.146	-.416	260	132	-.104	.119	.273	-.575
250	1901	-.094	.097	.231	-.465	250	1951	-.127	.095	.171	-.518	260	133	-.101	.126	.357	-.691
250	1902	.043	.087	.284	-.309	250	1952	-.128	.107	.206	-.485	260	134	-.095	.125	.477	-.479
250	1903	.151	.085	.448	-.164	250	1953	-.136	.097	.139	-.521	260	135	-.093	.120	.333	-.666
250	1904	-.033	.102	.309	-.377	250	1954	-.117	.095	.217	-.421	260	136	-.096	.118	.432	-.547
250	1905	-.007	.089	.276	-.295	250	1955	-.112	.089	.153	-.433	260	137	-.090	.116	.325	-.460
250	1906	-.079	.091	.236	-.418	250	1956	-.112	.091	.192	-.424	260	138	-.093	.116	.375	-.530
250	1907	-.084	.087	.159	-.368	250	1957	-.132	.100	.269	-.417	260	139	-.086	.123	.326	-.524
250	1908	-.096	.088	.194	-.374	250	1958	-.111	.101	.251	-.428	260	140	-.090	.113	.373	-.500
250	1909	-.083	.092	.314	-.373	250	1959	-.109	.094	.197	-.488	260	141	-.083	.114	.372	-.468
250	1910	-.078	.098	.262	-.385	250	1960	-.107	.099	.258	-.475	260	142	-.087	.115	.263	-.539
250	1911	-.085	.095	.231	-.452	250	1961	-.121	.095	.190	-.447	260	143	-.097	.116	.220	-.539
250	1912	-.083	.096	.270	-.429	250	1962	-.043	.093	.250	-.414	260	144	-.085	.129	.694	-.560

WD	TAP	CPMEAN	CPRMS	CPMAX	CPMIN	WD	TAP	CPMEAN	CPRMS	CPMAX	CPMIN	WD	TAP	CPMEAN	CPRMS	CPMAX	CPMIN
260	145	-.095	.113	.442	-.462	260	208	-.073	.117	.274	-.678	260	258	-.098	.102	.246	-.529
260	146	-.101	.127	.310	-.480	260	209	-.081	.112	.305	-.565	260	259	-.096	.107	.330	-.468
260	147	-.104	.116	.228	-.475	260	210	-.087	.115	.277	-.543	260	260	-.099	.107	.281	-.426
260	148	-.100	.111	.283	-.462	260	211	-.088	.115	.262	-.591	260	261	-.096	.110	.229	-.460
260	149	-.104	.112	.216	-.651	260	212	-.096	.115	.312	-.545	260	262	-.091	.102	.220	-.467
260	150	-.101	.115	.226	-.477	260	213	-.090	.117	.229	-.490	260	263	-.100	.101	.255	-.462
260	151	-.099	.111	.268	-.430	260	214	-.113	.107	.236	-.581	260	264	-.093	.101	.242	-.429
260	152	-.098	.111	.323	-.554	260	215	-.072	.111	.320	-.453	260	265	-.089	.098	.238	-.389
260	153	-.118	.116	.278	-.625	260	216	-.068	.102	.270	-.480	260	266	-.096	.107	.376	-.538
260	154	-.031	.123	.418	-.741	260	217	-.080	.109	.251	-.420	260	267	-.094	.105	.269	-.465
260	155	-.023	.121	.480	-.417	260	218	-.084	.119	.327	-.680	260	268	-.094	.102	.235	-.480
260	156	-.038	.115	.372	-.458	260	219	-.094	.112	.254	-.440	260	269	-.090	.106	.246	-.462
260	157	-.061	.113	.298	-.549	260	220	-.083	.118	.307	-.513	260	270	-.093	.109	.269	-.436
260	158	-.094	.119	.278	-.460	260	221	-.081	.106	.246	-.468	260	271	-.091	.106	.240	-.506
260	159	-.111	.110	.203	-.468	260	222	-.077	.105	.269	-.420	260	272	-.096	.098	.271	-.437
260	160	-.131	.113	.238	-.505	260	223	-.074	.104	.261	-.450	260	301	-.340	.242	.256	-1.813
260	161	-.137	.113	.175	-.554	260	224	-.072	.104	.237	-.428	260	302	-.186	.175	.341	-1.243
260	162	-.130	.115	.303	-.490	260	225	-.072	.100	.289	-.350	260	303	-.158	.142	.305	-1.015
260	163	-.124	.114	.258	-.462	260	226	-.077	.104	.290	-.435	260	304	-.151	.134	.370	-.741
260	164	-.088	.111	.263	-.617	260	227	-.086	.104	.256	-.517	260	305	-.152	.141	.327	-.735
260	165	-.079	.109	.283	-.427	260	228	-.084	.098	.222	-.397	260	306	-.142	.137	.230	-.746
260	166	-.075	.109	.286	-.428	260	229	-.073	.102	.242	-.453	260	307	-.265	.198	.268	-1.536
260	167	-.068	.103	.268	-.465	260	230	-.069	.104	.347	-.450	260	308	-.205	.165	.221	-1.021
260	168	-.081	.104	.220	-.489	260	231	-.068	.103	.275	-.527	260	309	-.148	.144	.273	-.865
260	169	-.101	.110	.253	-.504	260	232	-.070	.109	.300	-.433	260	310	-.143	.120	.197	-.598
260	170	-.133	.111	.198	-.514	260	233	-.069	.107	.226	-.458	260	311	-.132	.122	.300	-.631
260	171	-.204	.127	.164	-.836	260	234	-.074	.104	.237	-.472	260	312	-.135	.122	.266	-.720
260	172	-.230	.142	.201	-.720	260	235	-.080	.109	.231	-.453	260	313	-.244	.185	.271	-1.171
260	173	-.305	.171	.188	-1.170	260	236	-.072	.109	.369	-.503	260	314	-.227	.173	.345	-1.359
260	174	-.093	.107	.276	-.478	260	237	-.070	.106	.262	-.400	260	315	-.166	.140	.265	-.917
260	175	-.070	.103	.331	-.398	260	238	-.072	.102	.239	-.473	260	316	-.131	.111	.241	-.562
260	176	-.081	.110	.290	-.392	260	239	-.069	.099	.232	-.395	260	317	-.122	.131	.330	-.594
260	177	-.072	.109	.354	-.442	260	240	-.067	.104	.259	-.417	260	318	-.135	.124	.280	-.768
260	178	-.083	.106	.266	-.511	260	241	-.067	.099	.256	-.477	260	319	-.203	.175	.265	-1.433
260	179	-.058	.110	.396	-.483	260	242	-.072	.103	.256	-.463	260	320	-.181	.150	.243	-.863
260	180	-.087	.103	.219	-.452	260	243	-.076	.106	.247	-.517	260	321	-.151	.138	.495	-.976
260	181	-.077	.104	.248	-.457	260	244	-.073	.112	.295	-.435	260	322	-.130	.119	.197	-.761
260	182	-.071	.108	.359	-.429	260	245	-.072	.104	.252	-.383	260	323	-.121	.128	.369	-.657
260	183	-.083	.113	.352	-.421	260	246	-.094	.109	.362	-.494	260	324	-.118	.123	.328	-.571
260	184	-.089	.105	.250	-.429	260	247	-.092	.101	.269	-.420	260	325	-.147	.126	.280	-.805
260	185	-.077	.102	.250	-.408	260	248	-.086	.097	.255	-.478	260	326	-.150	.127	.209	-.852
260	186	-.067	.103	.232	-.408	260	249	-.091	.098	.243	-.465	260	327	-.131	.117	.320	-.606
260	187	-.086	.117	.274	-.564	260	250	-.094	.098	.238	-.475	260	328	-.113	.118	.239	-.712
260	201	-.083	.116	.354	-.437	260	251	-.097	.105	.253	-.473	260	329	-.113	.105	.219	-.611
260	202	-.143	.125	.270	-.583	260	252	-.103	.102	.224	-.429	260	330	-.117	.111	.263	-.835
260	203	-.123	.129	.295	-.615	260	253	-.099	.109	.320	-.473	260	331	-.129	.113	.219	-.594
260	204	-.090	.113	.247	-.460	260	254	-.100	.105	.288	-.443	260	332	-.140	.118	.256	-.567
260	205	-.097	.111	.289	-.497	260	255	-.094	.106	.258	-.520	260	333	-.123	.114	.308	-.628
260	206	-.103	.117	.357	-.566	260	256	-.094	.098	.262	-.430	260	334	-.109	.061	.060	-.301
260	207	-.082	.117	.327	-.561	260	257	-.087	.104	.280	-.443	260	355	-.112	.113	.261	-.473

WD	TAP	CPMEAN	CPRMS	CPMAX	CPMIN	WD	TAP	CPMEAN	CPRMS	CPMAX	CPMIN	WD	TAP	CPMEAN	CPRMS	CPMAX	CPMIN
260	336	-.105	.102	.241	-.470	260	428	-.024	.131	.522	-.527	260	506	-.172	.155	.354	-.725
260	337	-.124	.126	.239	-.536	260	429	.020	.121	.447	-.382	260	507	-.199	.165	.445	-1.050
260	338	-.124	.116	.271	-.519	260	430	.055	.118	.478	-.348	260	508	-.206	.159	.425	-1.040
260	339	-.119	.108	.265	-.460	260	431	.056	.120	.537	-.443	260	509	-.167	.143	.290	-.775
260	340	-.111	.111	.249	-.527	260	432	.033	.127	.561	-.424	260	510	-.158	.138	.458	-.716
260	341	-.100	.103	.214	-.449	260	433	-.011	.113	.441	-.404	260	511	-.206	.167	.283	-1.709
260	342	-.107	.116	.281	-.727	260	434	-.062	.115	.315	-.478	260	512	-.208	.156	.334	-1.042
260	343	-.128	.118	.239	-.578	260	435	-.101	.121	.256	-.615	260	513	-.143	.131	.337	-.779
260	344	-.134	.098	.183	-.495	260	436	-.008	.120	.424	-.426	260	514	-.142	.140	.318	-.976
260	345	-.110	.114	.268	-.541	260	437	.032	.126	.483	-.507	260	515	-.176	.133	.288	-.674
260	346	-.109	.104	.248	-.510	260	438	.069	.123	.608	-.422	260	516	-.179	.150	.605	-.895
260	347	-.111	.109	.275	-.477	260	439	.057	.114	.478	-.314	260	517	-.137	.129	.327	-.755
260	348	-.103	.111	.282	-.536	260	440	.025	.114	.397	-.463	260	518	-.140	.123	.270	-.612
260	349	-.133	.118	.249	-.624	260	441	-.016	.112	.464	-.419	260	519	-.206	.142	.283	-.914
260	350	-.110	.110	.284	-.538	260	442	-.056	.116	.341	-.634	260	520	-.197	.137	.324	-.737
260	351	-.102	.117	.355	-.505	260	443	-.088	.113	.280	-.576	260	521	-.140	.126	.286	-.652
260	352	-.102	.115	.257	-.524	260	444	-.001	.114	.487	-.415	260	522	-.140	.132	.270	-.615
260	353	-.107	.112	.267	-.490	260	445	.037	.127	.504	-.341	260	523	-.202	.151	.312	-.784
260	354	-.098	.106	.262	-.441	260	446	.068	.117	.527	-.339	260	524	-.219	.149	.564	-.754
260	355	-.103	.109	.257	-.439	260	447	.059	.121	.460	-.342	260	525	-.098	.124	.425	-.497
260	356	-.105	.110	.265	-.506	260	448	.025	.103	.342	-.305	260	526	-.060	.117	.337	-.472
260	357	-.099	.107	.246	-.415	260	449	-.018	.107	.416	-.425	260	527	-.048	.126	.489	-.554
260	358	-.099	.103	.255	-.433	260	450	-.057	.105	.283	-.381	260	528	-.065	.143	.492	-.616
260	401	-.155	.234	1.087	-1.250	260	451	-.090	.107	.300	-.455	260	529	-.041	.126	.503	-.436
260	402	-.116	.251	1.058	-1.216	260	452	-.005	.112	.423	-.460	260	530	-.065	.126	.466	-.470
260	403	.071	.203	.894	-.664	260	453	.000	.105	.369	-.304	260	531	-.057	.121	.507	-.508
260	404	-.045	.184	1.057	-.607	260	454	.007	.110	.361	-.393	260	532	-.062	.125	.371	-.513
260	405	-.012	.184	.826	-.622	260	455	.022	.110	.399	-.342	260	533	-.053	.122	.396	-.498
260	406	.024	.206	.979	-.668	260	456	.013	.105	.393	-.341	260	534	-.001	.132	.480	-.457
260	407	.058	.191	1.052	-.537	260	457	-.015	.117	.381	-.376	260	601	-.126	.127	.278	-.743
260	408	.071	.212	1.128	-.719	260	458	-.053	.103	.330	-.410	260	602	-.124	.133	.275	-.834
260	409	.064	.211	1.199	-.587	260	459	-.093	.107	.286	-.445	260	603	-.150	.136	.210	-.961
260	410	.031	.186	.798	-.920	260	460	.006	.107	.441	-.353	260	604	-.163	.157	.319	-1.394
260	411	-.040	.170	.596	-.676	260	461	.021	.108	.454	-.337	260	605	-.119	.125	.296	-.609
260	412	-.010	.158	.615	-.642	260	462	.017	.114	.484	-.371	260	606	-.123	.126	.233	-.986
260	413	.057	.168	.725	-.474	260	463	-.018	.107	.350	-.389	260	607	-.137	.135	.365	-.957
260	414	.121	.184	1.089	-.388	260	464	-.059	.104	.303	-.438	260	608	-.148	.142	.377	-.792
260	415	.160	.202	1.018	-.408	260	465	-.087	.110	.257	-.444	260	609	-.119	.119	.278	-.495
260	416	.134	.190	1.013	-.391	260	466	.037	.112	.417	-.358	260	610	-.113	.112	.283	-.534
260	417	.090	.166	.784	-.395	260	467	.043	.115	.461	-.373	260	611	-.113	.117	.311	-.662
260	418	-.003	.143	.612	-.511	260	468	.044	.100	.337	-.302	260	612	-.116	.126	.278	-.776
260	419	-.088	.137	.526	-.656	260	469	.030	.106	.402	-.351	260	613	-.115	.111	.236	-.529
260	420	-.023	.141	.649	-.561	260	470	.001	.102	.317	-.345	260	614	-.107	.107	.213	-.493
260	421	.025	.141	.664	-.527	260	471	.006	.099	.332	-.306	260	615	-.116	.111	.325	-.503
260	422	.079	.148	.847	-.390	260	472	.007	.104	.344	-.367	260	616	-.121	.116	.246	-.623
260	423	.083	.156	.791	-.485	260	501	-.165	.144	.485	-.851	260	617	-.102	.105	.275	-.503
260	424	.055	.128	.634	-.424	260	502	-.165	.155	.502	-.730	260	618	-.106	.109	.324	-.607
260	425	.012	.122	.577	-.439	260	503	-.216	.163	.511	-1.018	260	619	-.119	.118	.327	-.570
260	426	-.055	.118	.393	-.429	260	504	-.251	.202	.495	-1.458	260	620	-.138	.119	.226	-.674
260	427	-.107	.130	.292	-.757	260	505	-.177	.151	.339	-.968	260	621	-.102	.106	.228	-.458

WD	TAP	CPMEAN	CPRMS	CPMAX	CPMIN	WD	TAP	CPMEAN	CPRMS	CPMAX	CPMIN	WD	TAP	CPMEAN	CPRMS	CPMAX	CPMIN
260	622	-.107	.103	.218	-.443	260	1102	-.156	.112	.161	-.649	260	1226	-.078	.095	.206	-.393
260	623	-.132	.122	.260	-.594	260	1103	-.155	.114	.193	-.777	260	1227	-.077	.088	.212	-.409
260	624	-.147	.126	.252	-.719	260	1104	-.118	.100	.273	-.539	260	1228	-.084	.103	.257	-.396
260	625	-.103	.102	.283	-.466	260	1105	-.112	.099	.238	-.418	260	1229	-.092	.093	.215	-.398
260	626	-.106	.101	.228	-.466	260	1106	-.129	.105	.175	-.592	260	1301	-.090	.108	.225	-.603
260	627	-.116	.101	.308	-.445	260	1107	-.107	.095	.231	-.435	260	1302	-.016	.109	.340	-.383
260	628	-.112	.103	.256	-.482	260	1108	-.110	.101	.236	-.469	260	1303	-.026	.114	.306	-.530
260	629	-.099	.109	.293	-.529	260	1109	-.110	.104	.236	-.516	260	1304	-.108	.098	.205	-.439
260	630	-.112	.103	.197	-.474	260	1110	-.088	.089	.273	-.359	260	1305	-.083	.107	.254	-.432
260	631	-.095	.105	.335	-.446	260	1111	-.083	.085	.281	-.381	260	1306	-.049	.110	.322	-.433
260	632	-.098	.106	.285	-.511	260	1112	-.105	.107	.267	-.468	260	1307	-.079	.095	.282	-.371
260	633	-.093	.110	.257	-.489	260	1113	-.105	.102	.204	-.455	260	1308	-.112	.106	.203	-.490
260	634	-.094	.103	.217	-.510	260	1114	-.104	.112	.244	-.452	260	1309	-.092	.105	.263	-.488
260	801	-.100	.103	.252	-.489	260	1115	-.112	.101	.194	-.474	260	1311	-.054	.115	.258	-.488
260	802	-.106	.105	.251	-.500	260	1116	-.113	.099	.207	-.465	260	1312	-.037	.101	.305	-.397
260	803	-.066	.100	.301	-.409	260	1117	-.092	.101	.225	-.386	260	1313	-.043	.103	.325	-.433
260	804	-.100	.095	.197	-.443	260	1118	-.117	.103	.177	-.469	260	1314	-.015	.098	.296	-.290
260	805	-.089	.107	.247	-.467	260	1119	-.105	.098	.261	-.406	260	1315	-.118	.106	.291	-.467
260	806	-.094	.100	.249	-.524	260	1120	-.099	.099	.247	-.441	260	1316	-.090	.098	.261	-.422
260	807	-.096	.107	.275	-.480	260	1121	-.099	.097	.210	-.463	260	1317	-.046	.105	.286	-.425
260	808	-.109	.106	.241	-.489	260	1122	-.102	.100	.223	-.452	260	1318	-.061	.101	.262	-.397
260	809	-.103	.109	.236	-.489	260	1123	-.100	.099	.252	-.374	260	1319	-.021	.097	.331	-.300
260	810	-.064	.112	.371	-.456	260	1124	-.103	.100	.296	-.497	260	1320	.002	.098	.365	-.289
260	811	-.065	.115	.428	-.480	260	1125	-.096	.104	.293	-.492	260	1321	-.012	.099	.333	-.331
260	812	-.074	.110	.304	-.513	260	1126	-.106	.102	.237	-.453	260	1322	-.099	.100	.234	-.433
260	813	-.106	.112	.208	-.541	260	1201	-.136	.105	.153	-.556	260	1323	-.073	.096	.237	-.394
260	814	-.156	.141	.441	-.568	260	1202	-.143	.123	.249	-.575	260	1324	.013	.103	.382	-.329
260	815	-.088	.129	.426	-.544	260	1203	-.150	.118	.233	-.548	260	1325	.002	.103	.358	-.346
260	901	-.097	.124	.380	-.591	260	1204	-.141	.103	.192	-.501	260	1326	.026	.096	.375	-.290
260	902	-.294	.237	.306	-1.647	260	1205	-.170	.131	.273	-.654	260	1327	.036	.093	.334	-.281
260	903	-.142	.152	.322	-.968	260	1206	-.180	.126	.228	-.636	260	1328	-.034	.107	.296	-.518
260	904	-.005	.111	.387	-.414	260	1207	-.150	.110	.173	-.552	260	1329	-.070	.100	.241	-.377
260	905	-.020	.230	.934	-.947	260	1208	-.076	.104	.273	-.413	260	1330	-.050	.118	.365	-.430
260	906	-.107	.121	.380	-.641	260	1209	-.096	.096	.231	-.402	260	1331	-.084	.137	.324	-.724
260	907	-.330	.248	.319	-1.483	260	1210	-.080	.103	.283	-.403	260	1401	-.124	.115	.335	-.712
260	908	-.111	.139	.443	-.621	260	1211	-.145	.092	.140	-.456	260	1402	-.182	.111	.146	-.738
260	909	-.051	.119	.430	-.586	260	1212	-.097	.092	.188	-.377	260	1403	-.102	.128	.510	-.491
260	910	-.107	.129	.387	-.770	260	1213	-.098	.100	.243	-.411	260	1404	-.042	.125	.401	-.484
260	911	-.224	.194	.471	-1.268	260	1214	-.096	.128	.256	-.744	260	1405	-.160	.123	.195	-.726
260	912	-.188	.187	.471	-1.145	260	1215	-.110	.104	.212	-.564	260	1406	-.079	.124	.356	-.502
260	913	-.075	.127	.418	-.551	260	1216	-.105	.096	.174	-.470	260	1407	-.033	.110	.440	-.364
260	914	-.102	.144	.398	-.680	260	1217	-.081	.094	.190	-.371	260	1408	-.046	.109	.372	-.435
260	915	-.153	.169	.498	-1.021	260	1218	-.074	.085	.198	-.361	260	1409	-.102	.088	.286	-.516
260	916	-.041	.123	.379	-.550	260	1219	-.087	.093	.220	-.401	260	1410	-.104	.092	.193	-.366
260	917	-.076	.119	.509	-.636	260	1220	-.078	.086	.252	-.416	260	1411	-.066	.102	.323	-.393
260	918	-.046	.121	.445	-.487	260	1221	-.110	.092	.198	-.390	260	1412	-.021	.113	.408	-.479
260	919	-.144	.151	.423	-.656	260	1222	-.082	.093	.256	-.379	260	1413	.003	.139	.568	-.499
260	920	-.213	.180	.395	-1.283	260	1223	-.082	.089	.302	-.441	260	1414	-.102	.104	.275	-.446
260	921	-.184	.171	.342	-.927	260	1224	.011	.100	.354	-.268	260	1415	-.107	.098	.183	-.489
260	1101	-.140	.097	.177	-.452	260	1225	-.096	.105	.228	-.477	260	1416	-.048	.097	.299	-.377

WD	TAP	CPMEAN	CPRMS	CPMAX	CPMIN	WD	TAP	CPMEAN	CPRMS	CPMAX	CPMIN	WD	TAP	CPMEAN	CPRMS	CPMAX	CPMIN
260	1417	-.025	.111	.329	-.427	260	1932	-.077	.092	.197	-.416	270	114	.034	.215	1.108	-.518
260	1418	-.017	.144	.572	-.429	260	1933	-.130	.112	.299	-.603	270	115	.072	.237	1.193	-.593
260	1419	-.066	.107	.460	-.458	260	1934	-.118	.108	.244	-.568	270	116	.036	.215	1.063	-.520
260	1420	-.017	.147	.516	-.502	260	1935	-.112	.099	.192	-.488	270	117	.000	.186	1.184	-.527
260	1421	-.018	.131	.487	-.459	260	1936	-.101	.109	.186	-.601	270	118	-.056	.163	.583	-.697
260	1422	-.082	.109	.334	-.431	260	1937	-.108	.100	.178	-.515	270	119	-.091	.137	.364	-.556
260	1423	-.042	.115	.460	-.468	260	1938	-.085	.102	.233	-.452	270	120	-.110	.143	.295	-.645
260	1424	-.031	.108	.425	-.400	260	1939	-.088	.094	.228	-.391	270	121	-.100	.138	.339	-.723
260	1425	-.018	.119	.487	-.371	260	1940	-.129	.103	.164	-.510	270	122	-.093	.132	.348	-.682
260	1426	-.045	.117	.494	-.495	260	1941	-.105	.098	.201	-.378	270	123	-.085	.157	.400	-.681
260	1427	-.073	.104	.270	-.400	260	1942	-.107	.095	.195	-.446	270	124	-.023	.184	.886	-.506
260	1428	-.057	.093	.339	-.368	260	1943	-.104	.099	.272	-.468	270	125	-.096	.192	.999	-.581
260	1429	-.041	.101	.331	-.355	260	1944	-.111	.086	.113	-.388	270	126	-.013	.179	.880	-.517
260	1430	-.010	.112	.431	-.370	260	1945	-.130	.099	.186	-.501	270	127	-.035	.149	.733	-.488
260	1431	-.006	.118	.497	-.462	260	1946	-.116	.108	.212	-.505	270	128	-.058	.138	.578	-.634
260	1432	-.048	.117	.345	-.458	260	1947	-.118	.107	.230	-.485	270	129	-.076	.133	.392	-.522
260	1433	-.038	.111	.421	-.453	260	1948	-.110	.102	.223	-.458	270	130	-.079	.143	.404	-.573
260	1434	-.087	.158	.404	-.959	260	1949	-.130	.089	.163	-.390	270	131	-.065	.138	.415	-.488
260	1435	-.140	.153	.607	-.850	260	1950	-.122	.098	.169	-.452	270	132	-.060	.143	.542	-.465
260	1901	-.115	.109	.227	-.432	260	1951	-.170	.120	.235	-.906	270	133	-.062	.139	.463	-.494
260	1902	.026	.096	.298	-.305	260	1952	-.160	.111	.188	-.646	270	134	-.039	.153	.648	-.659
260	1903	.135	.093	.457	-.212	260	1953	-.163	.108	.241	-.586	270	135	-.028	.174	.907	-.486
260	1904	-.054	.102	.247	-.400	260	1954	-.124	.102	.221	-.577	270	136	-.041	.163	.889	-.556
260	1905	-.029	.095	.301	-.363	260	1955	-.116	.109	.208	-.544	270	137	-.066	.138	.514	-.573
260	1906	-.097	.096	.217	-.450	260	1956	-.116	.104	.236	-.477	270	138	-.064	.141	.390	-.488
260	1907	-.099	.108	.216	-.553	260	1957	-.145	.113	.264	-.546	270	139	-.076	.136	.347	-.578
260	1908	-.111	.104	.213	-.494	260	1958	-.120	.104	.178	-.517	270	140	-.069	.134	.361	-.544
260	1909	-.094	.105	.309	-.433	260	1959	-.108	.094	.156	-.461	270	141	-.065	.131	.399	-.574
260	1910	-.089	.102	.266	-.494	260	1960	-.109	.106	.183	-.571	270	142	-.058	.131	.431	-.504
260	1911	-.102	.095	.174	-.455	260	1961	-.119	.100	.186	-.533	270	143	-.060	.117	.331	-.504
260	1912	-.099	.107	.180	-.583	260	1962	-.101	.112	.264	-.500	270	144	-.044	.145	.586	-.743
260	1913	-.100	.098	.167	-.501	260	1963	-.057	.094	.249	-.364	270	145	-.048	.141	.609	-.506
260	1914	-.107	.097	.177	-.430	260	1964	-.063	.093	.304	-.400	270	146	-.065	.138	.533	-.506
260	1915	-.106	.094	.186	-.386	260	1965	-.140	.100	.221	-.416	270	147	-.063	.132	.372	-.567
260	1916	-.116	.088	.209	-.408	260	1966	-.126	.097	.164	-.466	270	148	-.071	.119	.417	-.479
260	1917	-.102	.095	.241	-.363	260	1967	-.116	.102	.253	-.495	270	149	-.076	.131	.399	-.492
260	1918	-.096	.093	.216	-.441	260	1968	-.115	.098	.163	-.397	270	150	-.072	.131	.334	-.556
260	1919	-.090	.103	.295	-.486	270	101	-.099	.140	.457	-.620	270	151	-.067	.126	.345	-.488
260	1920	-.080	.094	.191	-.371	270	102	-.101	.148	.414	-.895	270	152	-.074	.133	.316	-.560
260	1921	-.120	.098	.184	-.522	270	103	-.106	.196	.917	-.813	270	153	-.076	.138	.430	-.528
260	1922	-.108	.103	.197	-.516	270	104	.079	.228	.977	-.636	270	154	-.023	.148	.629	-.549
260	1923	-.109	.104	.219	-.472	270	105	.060	.214	1.129	-.584	270	155	-.008	.142	.756	-.458
260	1924	-.107	.100	.214	-.467	270	106	.011	.203	.933	-.912	270	156	-.036	.130	.532	-.488
260	1925	-.138	.094	.192	-.402	270	107	-.036	.192	.817	-1.075	270	157	-.056	.122	.451	-.521
260	1926	-.094	.095	.192	-.406	270	108	-.080	.163	.512	-1.084	270	158	-.078	.124	.384	-.477
260	1927	-.125	.103	.200	-.480	270	109	-.120	.146	.405	-1.046	270	159	-.094	.124	.293	-.709
260	1928	-.111	.103	.212	-.496	270	110	-.135	.147	.362	-1.030	270	160	-.096	.129	.381	-.515
260	1929	-.107	.098	.205	-.501	270	111	-.129	.138	.332	-.759	270	161	-.092	.119	.293	-.510
260	1930	-.104	.098	.261	-.463	270	112	-.120	.145	.387	-.624	270	162	-.085	.124	.361	-.544
260	1931	-.079	.106	.233	-.516	270	113	-.114	.141	.423	-.718	270	163	-.089	.119	.349	-.472

WD	TAP	CPMEAN	CPRMS	CPMAX	CPMIN	WD	TAP	CPMEAN	CPRMS	CPMAX	CPMIN	WD	TAP	CPMEAN	CPRMS	CPMAX	CPMIN
270	164	-.067	.132	.517	-.456	270	227	-.102	.125	.291	-.618	270	305	-.160	.138	.282	-.850
270	165	-.059	.120	.426	-.468	270	228	-.081	.118	.361	-.481	270	306	-.141	.131	.291	-.740
270	166	-.065	.122	.395	-.454	270	229	-.084	.106	.306	-.518	270	307	-.259	.189	.284	-1.449
270	167	-.052	.110	.329	-.492	270	230	-.080	.111	.284	-.531	270	308	-.175	.148	.284	-.846
270	168	-.057	.116	.295	-.467	270	231	-.079	.103	.290	-.506	270	309	-.146	.128	.306	-.749
270	169	-.079	.121	.318	-.492	270	232	-.075	.113	.306	-.445	270	310	-.152	.122	.221	-.562
270	170	-.119	.125	.289	-.562	270	233	-.083	.111	.218	-.488	270	311	-.141	.120	.214	-.572
270	171	-.160	.131	.270	-.594	270	234	-.083	.128	.350	-.513	270	312	-.140	.116	.204	-.625
270	172	-.180	.139	.260	-.698	270	235	-.090	.115	.266	-.549	270	313	-.217	.156	.262	-1.083
270	173	-.232	.164	.203	-.965	270	236	-.083	.111	.275	-.491	270	314	-.182	.154	.250	-1.287
270	174	-.095	.109	.262	-.465	270	237	-.073	.105	.261	-.434	270	315	-.153	.127	.372	-.592
270	175	-.065	.102	.293	-.417	270	238	-.079	.121	.334	-.441	270	316	-.153	.124	.205	-.700
270	176	-.067	.106	.267	-.445	270	239	-.072	.109	.245	-.477	270	317	-.134	.121	.243	-.599
270	177	-.061	.113	.260	-.535	270	240	-.070	.113	.307	-.411	270	318	-.133	.115	.218	-.657
270	178	-.070	.115	.348	-.508	270	241	-.069	.107	.265	-.464	270	319	-.171	.141	.192	-.883
270	179	-.045	.105	.362	-.371	270	242	-.078	.112	.304	-.504	270	320	-.162	.132	.308	-.757
270	180	-.086	.101	.262	-.438	270	243	-.082	.115	.290	-.570	270	321	-.143	.121	.252	-.684
270	181	-.065	.109	.323	-.464	270	244	-.076	.110	.250	-.409	270	322	-.129	.119	.259	-.856
270	182	-.057	.108	.321	-.498	270	245	-.074	.105	.268	-.489	270	323	-.124	.112	.279	-.708
270	183	-.065	.115	.409	-.511	270	246	-.103	.106	.230	-.491	270	324	-.125	.115	.240	-.499
270	184	-.084	.105	.296	-.418	270	247	-.093	.113	.247	-.584	270	325	-.137	.119	.214	-.547
270	185	-.063	.117	.284	-.430	270	248	-.091	.104	.242	-.438	270	326	-.141	.118	.282	-.519
270	186	-.050	.106	.331	-.395	270	249	-.105	.111	.286	-.444	270	327	-.130	.118	.257	-.530
270	187	-.070	.113	.323	-.430	270	250	-.102	.104	.215	-.444	270	328	-.116	.112	.235	-.591
270	201	-.095	.123	.358	-.728	270	251	-.099	.110	.293	-.528	270	329	-.121	.101	.230	-.463
270	202	-.141	.128	.374	-.603	270	252	-.100	.104	.264	-.508	270	330	-.111	.107	.274	-.494
270	203	-.133	.121	.227	-.713	270	253	-.107	.110	.257	-.410	270	331	-.132	.118	.228	-.633
270	204	-.102	.117	.273	-.488	270	254	-.100	.111	.213	-.474	270	332	-.131	.103	.291	-.468
270	205	-.107	.123	.315	-.529	270	255	-.092	.109	.267	-.460	270	333	-.123	.113	.270	-.538
270	206	-.109	.118	.293	-.611	270	256	-.098	.106	.223	-.423	270	334	-.107	.061	.075	-.319
270	207	-.090	.114	.243	-.482	270	257	-.103	.116	.291	-.443	270	335	-.117	.100	.204	-.416
270	208	-.088	.119	.340	-.486	270	258	-.105	.107	.214	-.487	270	336	-.120	.104	.208	-.516
270	209	-.091	.121	.329	-.667	270	259	-.107	.104	.206	-.716	270	337	-.135	.105	.180	-.570
270	210	-.100	.129	.349	-.534	270	260	-.103	.097	.237	-.417	270	338	-.129	.112	.293	-.613
270	211	-.105	.121	.393	-.522	270	261	-.100	.113	.281	-.541	270	339	-.122	.109	.206	-.497
270	212	-.105	.122	.261	-.728	270	262	-.100	.104	.291	-.420	270	340	-.111	.113	.216	-.475
270	213	-.104	.118	.282	-.482	270	263	-.098	.107	.245	-.460	270	341	-.110	.110	.223	-.530
270	214	-.116	.123	.253	-.567	270	264	-.104	.105	.255	-.465	270	342	-.114	.108	.303	-.453
270	215	-.095	.109	.234	-.497	270	265	-.097	.106	.262	-.570	270	343	-.135	.117	.235	-.676
270	216	-.095	.112	.376	-.489	270	266	-.093	.115	.325	-.516	270	344	-.143	.115	.218	-.608
270	217	-.091	.106	.268	-.484	270	267	-.099	.106	.244	-.423	270	345	-.115	.119	.303	-.538
270	218	-.104	.123	.261	-.624	270	268	-.095	.096	.233	-.440	270	346	-.109	.129	.318	-.704
270	219	-.094	.117	.263	-.527	270	269	-.096	.108	.303	-.472	270	347	-.114	.117	.217	-.495
270	220	-.101	.114	.293	-.529	270	270	-.101	.104	.254	-.465	270	348	-.110	.113	.268	-.470
270	221	-.093	.114	.275	-.516	270	271	-.099	.107	.282	-.450	270	349	-.138	.116	.252	-.492
270	222	-.085	.109	.241	-.540	270	272	-.105	.106	.223	-.453	270	350	-.115	.102	.225	-.491
270	223	-.089	.116	.279	-.436	270	301	-.284	.220	.268	-1.465	270	351	-.110	.108	.359	-.471
270	224	-.084	.116	.340	-.484	270	302	-.182	.167	.294	-1.076	270	352	-.112	.115	.281	-.515
270	225	-.089	.118	.247	-.470	270	303	-.162	.137	.284	-.925	270	353	-.110	.113	.254	-.473
270	226	-.093	.126	.325	-.708	270	304	-.168	.129	.234	-.749	270	354	-.106	.104	.254	-.447

WD	TAP	CPMEAN	CPRMS	CPMAX	CPMIN	WD	TAP	CPMEAN	CPRMS	CPMAX	CPMIN	WD	TAP	CPMEAN	CPRMS	CPMAX	CPMIN
270	355	-.115	.110	.285	-.534	270	447	.046	.114	.440	-.319	270	525	-.073	.125	.455	-.529
270	356	-.114	.109	.186	-.588	270	448	.018	.109	.434	-.312	270	526	-.043	.115	.351	-.424
270	357	-.105	.116	.278	-.500	270	449	-.017	.101	.308	-.402	270	527	-.032	.121	.393	-.434
270	358	-.104	.107	.241	-.522	270	450	-.055	.106	.277	-.414	270	528	-.050	.130	.562	-.626
270	401	-.131	.198	.917	-.822	270	451	-.086	.100	.296	-.431	270	529	-.048	.127	.512	-.548
270	402	-.122	.192	.669	-.900	270	452	-.005	.118	.400	-.399	270	530	-.054	.131	.429	-.495
270	403	.019	.193	.870	-.675	270	453	-.001	.112	.357	-.397	270	531	-.040	.118	.432	-.425
270	404	-.068	.173	.731	-.934	270	454	.006	.105	.398	-.404	270	532	-.042	.120	.397	-.507
270	405	-.037	.150	.702	-.764	270	455	.020	.110	.405	-.383	270	533	-.038	.119	.395	-.549
270	406	-.041	.145	.832	-.557	270	456	.013	.106	.340	-.370	270	534	-.007	.122	.477	-.369
270	407	-.036	.154	.724	-.502	270	457	-.017	.112	.297	-.395	270	601	-.134	.133	.332	-.609
270	408	-.005	.183	.864	-.576	270	458	-.055	.109	.364	-.378	270	602	-.134	.134	.297	-.840
270	409	.004	.190	.979	-.711	270	459	-.092	.109	.251	-.477	270	603	-.201	.160	.324	-.993
270	410	-.020	.166	.724	-.711	270	460	.007	.109	.358	-.571	270	604	-.274	.227	.502	-1.728
270	411	-.062	.172	.613	-.864	270	461	.016	.113	.361	-.391	270	605	-.140	.134	.300	-.843
270	412	-.034	.184	.786	-.870	270	462	.007	.117	.366	-.356	270	606	-.142	.142	.281	-1.045
270	413	.000	.166	.517	-.877	270	463	-.016	.109	.325	-.425	270	607	-.204	.170	.254	-1.152
270	414	.030	.157	.796	-.521	270	464	-.061	.116	.331	-.509	270	608	-.255	.200	.247	-1.354
270	415	.044	.154	.808	-.388	270	465	-.090	.110	.283	-.471	270	609	-.124	.121	.249	-.641
270	416	.038	.158	1.223	-.431	270	466	.036	.111	.434	-.354	270	610	-.125	.121	.215	-.759
270	417	.019	.161	.783	-.441	270	467	.043	.113	.392	-.371	270	611	-.190	.168	.264	-1.143
270	418	-.038	.152	.612	-.559	270	468	.041	.120	.373	-.408	270	612	-.209	.183	.316	-1.751
270	419	-.105	.132	.437	-.819	270	469	.028	.110	.383	-.332	270	613	-.117	.114	.205	-.565
270	420	-.029	.162	.618	-.920	270	470	-.001	.113	.365	-.361	270	614	-.114	.118	.298	-.533
270	421	.002	.157	.599	-1.117	270	471	-.002	.107	.348	-.344	270	615	-.154	.134	.303	-.837
270	422	.033	.129	.554	-.473	270	472	.012	.116	.394	-.435	270	616	-.169	.140	.257	-1.094
270	423	.036	.117	.518	-.374	270	501	-.074	.176	.706	-.739	270	617	-.116	.110	.232	-.626
270	424	.013	.118	.479	-.386	270	502	-.038	.205	.771	-.662	270	618	-.123	.111	.200	-.526
270	425	-.013	.122	.742	-.408	270	503	-.080	.221	.906	-.855	270	619	-.151	.129	.240	-.697
270	426	-.068	.120	.431	-.489	270	504	-.089	.225	.806	-.834	270	620	-.174	.142	.296	-.984
270	427	-.107	.125	.344	-.581	270	505	-.056	.175	.667	-.926	270	621	-.109	.118	.220	-.592
270	428	-.008	.135	.549	-.742	270	506	-.062	.182	.806	-.613	270	622	-.113	.113	.266	-.462
270	429	.019	.143	.714	-1.372	270	507	-.073	.193	.842	-.950	270	623	-.165	.126	.173	-.842
270	430	.050	.124	.510	-.364	270	508	-.087	.203	.891	-1.156	270	624	-.191	.140	.202	-.815
270	431	.044	.120	.417	-.353	270	509	-.065	.153	.573	-.564	270	625	-.117	.110	.230	-.522
270	432	.018	.105	.486	-.321	270	510	-.066	.159	.621	-.499	270	626	-.121	.109	.217	-.521
270	433	-.014	.112	.412	-.429	270	511	-.089	.163	.655	-.686	270	627	-.138	.113	.230	-.533
270	434	-.060	.109	.327	-.432	270	512	-.080	.206	.813	-.814	270	628	-.134	.118	.239	-.559
270	435	-.097	.107	.241	-.432	270	513	-.061	.152	.653	-.831	270	629	-.113	.111	.286	-.523
270	436	.011	.122	.452	-.475	270	514	-.076	.134	.485	-.516	270	630	-.123	.104	.288	-.469
270	437	.038	.120	.455	-.614	270	515	-.119	.157	.534	-.712	270	631	-.114	.112	.225	-.440
270	438	.066	.121	.459	-.509	270	516	-.109	.143	.696	-.599	270	632	-.116	.099	.254	-.477
270	439	.053	.116	.445	-.290	270	517	-.064	.121	.352	-.610	270	633	-.098	.112	.321	-.491
270	440	.030	.116	.436	-.321	270	518	-.086	.136	.408	-.724	270	634	-.112	.106	.249	-.445
270	441	-.012	.112	.364	-.389	270	519	-.140	.160	.388	-.928	270	801	-.107	.107	.247	-.462
270	442	-.057	.110	.328	-.399	270	520	-.134	.166	.476	-1.068	270	802	-.109	.112	.245	-.464
270	443	-.090	.111	.287	-.489	270	521	-.078	.122	.389	-.569	270	803	-.060	.109	.315	-.454
270	444	.007	.111	.350	-.485	270	522	-.083	.125	.394	-.581	270	804	-.101	.102	.289	-.461
270	445	.040	.126	.452	-.819	270	523	-.107	.163	.611	-.617	270	805	-.098	.110	.220	-.504
270	446	.056	.115	.429	-.302	270	524	-.143	.139	.456	-.690	270	806	-.116	.108	.269	-.540

WD	TAP	CPMEAN	CPRMS	CPMAX	CPMIN	WD	TAP	CPMEAN	CPRMS	CPMAX	CPMIN	WD	TAP	CPMEAN	CPRMS	CPMAX	CPMIN
270	807	-.105	.101	.217	-.494	270	1121	-.097	.096	.212	-.404	270	1317	-.023	.104	.337	-.493
270	808	-.122	.105	.242	-.476	270	1122	-.100	.099	.230	-.416	270	1318	-.045	.099	.299	-.363
270	809	-.134	.114	.217	-.521	270	1123	-.093	.101	.288	-.446	270	1319	-.012	.098	.372	-.321
270	810	-.053	.117	.338	-.408	270	1124	-.091	.100	.222	-.467	270	1320	.000	.097	.338	-.347
270	811	-.052	.123	.392	-.467	270	1125	-.087	.102	.235	-.403	270	1321	-.010	.097	.314	-.262
270	812	-.054	.106	.315	-.474	270	1126	-.095	.105	.222	-.448	270	1322	-.068	.103	.277	-.443
270	813	-.092	.109	.240	-.427	270	1201	-.141	.111	.266	-.526	270	1323	-.059	.102	.328	-.369
270	814	-.129	.125	.345	-.548	270	1202	-.133	.120	.193	-.548	270	1324	.019	.110	.528	-.315
270	815	-.075	.118	.396	-.503	270	1203	-.128	.113	.225	-.499	270	1325	.007	.091	.317	-.335
270	901	-.105	.130	.348	-.796	270	1204	-.131	.111	.190	-.504	270	1326	.021	.091	.290	-.253
270	902	-.215	.228	.532	-1.855	270	1205	-.159	.131	.239	-.681	270	1327	.029	.100	.351	-.289
270	903	-.132	.143	.337	-.665	270	1206	-.174	.127	.196	-.643	270	1328	-.014	.097	.309	-.332
270	904	.021	.125	.403	-.399	270	1207	-.136	.107	.224	-.559	270	1329	-.058	.103	.282	-.390
270	905	-.046	.211	1.131	-.846	270	1208	-.061	.112	.347	-.428	270	1330	-.039	.125	.392	-.446
270	906	-.110	.123	.252	-.675	270	1209	-.065	.103	.349	-.354	270	1331	-.068	.136	.377	-.744
270	907	-.226	.213	.391	-1.362	270	1210	-.062	.099	.241	-.484	270	1401	-.107	.122	.290	-.483
270	908	-.113	.135	.346	-.572	270	1211	-.108	.095	.211	-.396	270	1402	-.149	.105	.157	-.762
270	909	-.060	.134	.443	-.709	270	1212	-.087	.092	.241	-.410	270	1403	-.075	.127	.402	-.458
270	910	-.135	.137	.412	-.704	270	1213	-.096	.094	.217	-.463	270	1404	-.028	.118	.413	-.468
270	911	-.174	.167	.421	-1.023	270	1214	-.060	.121	.354	-.487	270	1405	-.136	.128	.214	-.887
270	912	-.147	.163	.444	-.909	270	1215	-.091	.099	.177	-.423	270	1406	-.066	.119	.397	-.478
270	913	-.128	.154	.405	-1.365	270	1216	-.076	.093	.253	-.417	270	1407	-.012	.120	.363	-.457
270	914	-.119	.145	.509	-.912	270	1217	-.069	.092	.221	-.367	270	1408	-.049	.107	.360	-.411
270	915	-.124	.156	.530	-.782	270	1218	-.061	.096	.245	-.407	270	1409	-.098	.097	.197	-.406
270	916	-.094	.132	.320	-.654	270	1219	-.087	.089	.206	-.415	270	1410	-.101	.091	.225	-.387
270	917	-.151	.154	.471	-.830	270	1220	-.065	.094	.237	-.350	270	1411	-.065	.102	.272	-.387
270	918	-.103	.139	.377	-.748	270	1221	-.083	.091	.225	-.367	270	1412	-.028	.110	.335	-.391
270	919	-.132	.154	.763	-.912	270	1222	-.070	.095	.208	-.380	270	1413	-.024	.129	.507	-.496
270	920	-.181	.175	.496	-1.132	270	1223	-.079	.094	.229	-.374	270	1414	-.090	.105	.215	-.454
270	921	-.176	.166	.403	-1.135	270	1224	.011	.097	.416	-.321	270	1415	-.095	.105	.213	-.414
270	1101	-.130	.117	.245	-.500	270	1225	-.070	.103	.240	-.358	270	1416	-.045	.107	.309	-.387
270	1102	-.143	.126	.434	-.523	270	1226	-.063	.102	.241	-.385	270	1417	-.019	.114	.335	-.371
270	1103	-.136	.111	.223	-.725	270	1227	-.069	.098	.238	-.367	270	1418	-.021	.147	.607	-.394
270	1104	-.108	.099	.207	-.476	270	1228	-.078	.109	.312	-.434	270	1419	-.063	.102	.259	-.424
270	1105	-.106	.099	.214	-.413	270	1229	-.079	.102	.328	-.359	270	1420	-.023	.153	.706	-.435
270	1106	-.122	.115	.385	-.457	270	1301	-.067	.119	.307	-.557	270	1421	-.020	.134	.454	-.495
270	1107	-.103	.102	.234	-.391	270	1302	.015	.112	.420	-.325	270	1422	-.070	.102	.275	-.466
270	1108	-.108	.110	.254	-.418	270	1303	.012	.120	.536	-.362	270	1423	-.040	.104	.299	-.367
270	1109	-.111	.096	.202	-.474	270	1304	-.087	.106	.239	-.393	270	1424	-.023	.106	.337	-.413
270	1110	-.073	.091	.191	-.385	270	1305	-.049	.117	.355	-.403	270	1425	-.014	.112	.408	-.402
270	1111	-.075	.097	.230	-.418	270	1306	-.032	.100	.308	-.435	270	1426	-.049	.130	.356	-.485
270	1112	-.099	.097	.165	-.433	270	1307	-.058	.096	.300	-.422	270	1427	-.064	.094	.302	-.447
270	1113	-.101	.105	.244	-.433	270	1308	-.089	.118	.406	-.425	270	1428	-.048	.102	.276	-.368
270	1114	-.100	.094	.231	-.421	270	1309	-.073	.100	.214	-.412	270	1429	-.025	.105	.363	-.333
270	1115	-.109	.098	.199	-.479	270	1311	-.032	.103	.295	-.380	270	1430	-.007	.112	.416	-.349
270	1116	-.110	.105	.209	-.556	270	1312	-.015	.105	.319	-.358	270	1431	-.006	.115	.336	-.424
270	1117	-.087	.095	.234	-.425	270	1313	-.021	.109	.348	-.398	270	1432	-.044	.109	.387	-.447
270	1118	-.109	.115	.406	-.435	270	1314	-.011	.094	.358	-.340	270	1433	-.036	.114	.401	-.389
270	1119	-.099	.093	.161	-.484	270	1315	-.089	.110	.309	-.432	270	1434	-.093	.154	.573	-.796
270	1120	-.093	.102	.292	-.500	270	1316	-.076	.094	.218	-.380	270	1435	-.123	.153	.614	-.760

WD	TAP	CPMEAN	CPRMS	CPMAX	CPMIN	WD	TAP	CPMEAN	CPRMS	CPMAX	CPMIN	WD	TAP	CPMEAN	CPRMS	CPMAX	CPMIN
270	1901	-.097	.098	.187	-.449	270	1951	-.138	.110	.227	-.550	280	133	.080	.145	.633	-.417
270	1902	.039	.098	.361	-.341	270	1952	-.140	.120	.268	-.663	280	134	.102	.200	.995	-.470
270	1903	.154	.090	.407	-.183	270	1953	-.134	.121	.394	-.686	280	135	.136	.228	1.122	-.440
270	1904	-.053	.102	.300	-.393	270	1954	-.103	.114	.284	-.570	280	136	.092	.189	.854	-.470
270	1905	-.024	.103	.309	-.377	270	1955	-.101	.108	.258	-.444	280	137	.027	.153	.755	-.456
270	1906	-.089	.109	.226	-.482	270	1956	-.101	.104	.247	-.450	280	138	.005	.141	.615	-.454
270	1907	-.097	.108	.261	-.476	270	1957	-.129	.109	.238	-.543	280	139	-.029	.135	.493	-.516
270	1908	-.109	.106	.302	-.476	270	1958	-.101	.102	.208	-.500	280	140	-.015	.147	.497	-.523
270	1909	-.092	.099	.229	-.434	270	1959	-.093	.108	.314	-.466	280	141	.030	.142	.575	-.427
270	1910	-.079	.101	.231	-.432	270	1960	-.091	.105	.188	-.455	280	142	.052	.137	.585	-.323
270	1911	-.106	.106	.294	-.463	270	1961	-.097	.120	.262	-.520	280	143	.058	.149	.614	-.477
270	1912	-.103	.101	.163	-.415	270	1962	-.067	.115	.312	-.507	280	144	.065	.171	.720	-.581
270	1913	-.103	.118	.229	-.523	270	1963	-.030	.105	.373	-.353	280	145	.087	.168	.762	-.374
270	1914	-.117	.102	.237	-.456	270	1964	-.030	.109	.401	-.476	280	146	.053	.159	.649	-.456
270	1915	-.113	.109	.250	-.458	270	1965	-.135	.114	.266	-.539	280	147	.003	.138	.582	-.404
270	1916	-.105	.104	.252	-.445	270	1966	-.114	.114	.271	-.485	280	148	-.008	.125	.368	-.440
270	1917	-.106	.104	.287	-.430	270	1967	-.098	.104	.286	-.474	280	149	-.028	.131	.483	-.510
270	1918	-.089	.107	.285	-.393	270	1968	-.100	.119	.316	-.674	280	150	-.025	.134	.428	-.576
270	1919	-.080	.103	.326	-.476	280	101	-.107	.147	.448	-.772	280	151	.003	.129	.407	-.395
270	1920	-.075	.117	.364	-.606	280	102	-.069	.164	.633	-.863	280	152	.015	.129	.636	-.443
270	1921	-.129	.117	.287	-.587	280	103	.023	.228	.973	-.709	280	153	.011	.121	.569	-.478
270	1922	-.125	.109	.257	-.491	280	104	.326	.266	1.176	-.483	280	154	.020	.150	.753	-.632
270	1923	-.121	.111	.270	-.537	280	105	.273	.256	1.216	-.379	280	155	.036	.149	.575	-.392
270	1924	-.117	.111	.278	-.484	280	106	.157	.231	.922	-.504	280	156	.017	.138	.499	-.394
270	1925	-.109	.113	.228	-.473	280	107	.077	.208	.953	-1.019	280	157	.003	.141	.509	-.516
270	1926	-.083	.100	.239	-.386	280	108	-.013	.173	.799	-.816	280	158	-.010	.124	.426	-.404
270	1927	-.127	.102	.187	-.483	280	109	-.119	.169	.613	-1.195	280	159	-.036	.123	.405	-.533
270	1928	-.122	.103	.256	-.449	280	110	-.158	.171	.329	-1.267	280	160	-.032	.136	.416	-.579
270	1929	-.116	.110	.297	-.492	280	111	-.100	.166	.424	-1.554	280	161	-.011	.135	.472	-.426
270	1930	-.094	.113	.267	-.520	280	112	-.047	.170	.538	-.853	280	162	-.006	.129	.447	-.401
270	1931	-.078	.104	.275	-.438	280	113	-.014	.156	.459	-.862	280	163	-.010	.119	.379	-.507
270	1932	-.074	.091	.223	-.382	280	114	.314	.263	1.174	-.469	280	164	-.057	.123	.426	-.452
270	1933	-.142	.107	.189	-.602	280	115	.329	.287	1.367	-.432	280	165	-.029	.127	.377	-.574
270	1934	-.131	.113	.213	-.589	280	116	.266	.283	1.294	-.500	280	166	-.052	.129	.405	-.539
270	1935	-.122	.111	.335	-.494	280	117	.146	.212	1.003	-.364	280	167	-.031	.116	.430	-.443
270	1936	-.110	.106	.195	-.468	280	118	.051	.174	.899	-.511	280	168	-.008	.114	.386	-.535
270	1937	-.099	.121	.269	-.522	280	119	-.045	.134	.420	-.511	280	169	-.010	.122	.357	-.477
270	1938	-.074	.109	.290	-.406	280	120	-.079	.162	.406	-1.283	280	170	-.024	.114	.359	-.464
270	1939	-.072	.109	.316	-.410	280	121	-.025	.149	.457	-.681	280	171	-.024	.110	.338	-.436
270	1940	-.102	.120	.318	-.955	280	122	.049	.149	.631	-.471	280	172	-.047	.123	.388	-.652
270	1941	-.108	.108	.295	-.537	280	123	.053	.178	.682	-.681	280	173	-.044	.117	.320	-.465
270	1942	-.103	.109	.277	-.438	280	124	.167	.218	1.243	-.472	280	174	-.112	.114	.257	-.477
270	1943	-.097	.100	.301	-.458	280	125	.200	.222	1.369	-.337	280	175	-.047	.106	.294	-.388
270	1944	-.098	.106	.249	-.557	280	126	.143	.231	1.015	-.517	280	176	-.031	.111	.357	-.468
270	1945	-.111	.120	.267	-.496	280	127	.063	.183	.822	-.470	280	177	-.009	.113	.362	-.347
270	1946	-.102	.117	.333	-.466	280	128	.039	.150	.707	-.448	280	178	-.003	.128	.388	-.402
270	1947	-.106	.116	.305	-.552	280	129	-.030	.140	.545	-.484	280	179	-.007	.109	.378	-.356
270	1948	-.102	.113	.307	-.444	280	130	-.012	.150	.483	-.486	280	180	-.093	.105	.206	-.487
270	1949	-.094	.111	.232	-.416	280	131	.048	.144	.591	-.724	280	181	-.015	.109	.352	-.378
270	1950	-.096	.102	.225	-.416	280	132	.084	.152	.684	-.468	280	182	-.002	.118	.396	-.381

WD	TAP	CPMEAN	CPRMS	CPMAX	CPMIN	WD	TAP	CPMEAN	CPRMS	CPMAX	CPMIN	WD	TAP	CPMEAN	CPRMS	CPMAX	CPMIN
280	183	-.007	.116	.422	-.415	280	246	-.130	.110	.240	-.597	280	324	-.140	.106	.233	-.542
280	184	-.080	.116	.328	-.436	280	247	-.113	.113	.247	-.453	280	325	-.157	.125	.165	-.624
280	185	-.030	.114	.306	-.415	280	248	-.123	.106	.262	-.507	280	326	-.152	.121	.213	-.956
280	186	-.005	.119	.437	-.446	280	249	-.123	.118	.270	-.628	280	327	-.153	.112	.247	-.549
280	187	.000	.118	.385	-.456	280	250	-.125	.110	.233	-.592	280	328	-.136	.117	.263	-.562
280	201	-.121	.123	.302	-.541	280	251	-.123	.111	.162	-.563	280	329	-.133	.097	.206	-.487
280	202	-.174	.112	.161	-.614	280	252	-.132	.116	.330	-.660	280	330	-.149	.121	.232	-.864
280	203	-.186	.140	.274	-.684	280	253	-.138	.115	.172	-.580	280	331	-.147	.117	.248	-.540
280	204	-.125	.119	.290	-.541	280	254	-.131	.112	.188	-.540	280	332	-.152	.116	.230	-.584
280	205	-.118	.122	.216	-.529	280	255	-.124	.106	.255	-.523	280	333	-.135	.116	.278	-.702
280	206	-.121	.110	.239	-.492	280	256	-.131	.117	.242	-.530	280	334	-.139	.072	.076	-.380
280	207	-.106	.109	.237	-.526	280	257	-.132	.108	.208	-.505	280	335	-.138	.115	.228	-.555
280	208	-.111	.117	.285	-.527	280	258	-.125	.112	.237	-.547	280	336	-.133	.116	.220	-.600
280	209	-.120	.119	.304	-.598	280	259	-.127	.103	.195	-.475	280	337	-.147	.110	.225	-.577
280	210	-.110	.124	.301	-.526	280	260	-.138	.117	.243	-.506	280	338	-.142	.119	.257	-.559
280	211	-.114	.120	.357	-.607	280	261	-.126	.110	.257	-.546	280	339	-.146	.114	.201	-.654
280	212	-.120	.110	.283	-.522	280	262	-.133	.121	.242	-.662	280	340	-.130	.115	.265	-.614
280	213	-.130	.109	.239	-.506	280	263	-.134	.102	.204	-.472	280	341	-.137	.107	.243	-.533
280	214	-.132	.108	.191	-.550	280	264	-.144	.125	.340	-.567	280	342	-.138	.112	.171	-.587
280	215	-.116	.110	.206	-.519	280	265	-.142	.123	.221	-.621	280	343	-.148	.117	.158	-.600
280	216	-.112	.112	.248	-.480	280	266	-.137	.116	.206	-.569	280	344	-.170	.114	.181	-.574
280	217	-.112	.121	.264	-.647	280	267	-.134	.108	.213	-.524	280	345	-.154	.105	.192	-.568
280	218	-.107	.122	.304	-.601	280	268	-.127	.116	.272	-.592	280	346	-.140	.114	.196	-.573
280	219	-.107	.115	.255	-.654	280	269	-.126	.118	.267	-.562	280	347	-.143	.116	.192	-.538
280	220	-.117	.117	.366	-.533	280	270	-.132	.118	.293	-.565	280	348	-.142	.113	.292	-.602
280	221	-.113	.104	.287	-.496	280	271	-.136	.112	.233	-.523	280	349	-.182	.121	.242	-.666
280	222	-.103	.113	.273	-.452	280	272	-.122	.105	.226	-.506	280	350	-.150	.119	.277	-.533
280	223	-.099	.109	.241	-.526	280	301	-.180	.135	.257	-.866	280	351	-.141	.122	.258	-.666
280	224	-.107	.109	.285	-.427	280	302	-.163	.129	.272	-.856	280	352	-.150	.111	.222	-.567
280	225	-.106	.108	.276	-.489	280	303	-.150	.127	.265	-.786	280	353	-.145	.114	.265	-.541
280	226	-.101	.115	.332	-.540	280	304	-.147	.116	.238	-.561	280	354	-.141	.110	.229	-.568
280	227	-.101	.115	.297	-.637	280	305	-.139	.116	.211	-.639	280	355	-.138	.114	.302	-.556
280	228	-.108	.111	.251	-.543	280	306	-.160	.121	.199	-.693	280	356	-.155	.118	.217	-.553
280	229	-.104	.119	.246	-.473	280	307	-.157	.119	.208	-.665	280	357	-.139	.133	.259	-.662
280	230	-.105	.108	.271	-.492	280	308	-.172	.119	.300	-.694	280	358	-.138	.115	.268	-.592
280	231	-.089	.117	.244	-.492	280	309	-.142	.113	.258	-.692	280	401	-.038	.209	.857	-1.141
280	232	-.094	.110	.281	-.430	280	310	-.148	.111	.253	-.787	280	402	-.096	.159	.838	-.693
280	233	-.095	.111	.302	-.520	280	311	-.144	.112	.225	-.560	280	403	-.057	.135	.516	-.560
280	234	-.095	.126	.288	-.709	280	312	-.144	.109	.208	-.510	280	404	-.117	.232	.703	-1.226
280	235	-.095	.123	.391	-.594	280	313	-.161	.117	.203	-.559	280	405	-.049	.175	.562	-.770
280	236	-.116	.123	.273	-.485	280	314	-.151	.112	.247	-.515	280	406	-.040	.133	.506	-.479
280	237	-.105	.112	.234	-.529	280	315	-.146	.106	.196	-.612	280	407	-.046	.116	.459	-.900
280	238	-.103	.101	.183	-.459	280	316	-.144	.114	.323	-.593	280	408	-.051	.125	.442	-.528
280	239	-.091	.107	.228	-.438	280	317	-.145	.109	.260	-.532	280	409	-.061	.123	.584	-.543
280	240	-.100	.118	.315	-.476	280	318	-.153	.118	.243	-.564	280	410	-.081	.132	.481	-.580
280	241	-.086	.111	.357	-.503	280	319	-.150	.126	.270	-.814	280	411	-.102	.129	.396	-.706
280	242	-.092	.112	.313	-.510	280	320	-.158	.117	.200	-.575	280	412	-.108	.222	.591	-1.125
280	243	-.097	.115	.251	-.515	280	321	-.146	.121	.247	-.739	280	413	-.059	.224	.613	-1.167
280	244	-.104	.108	.236	-.448	280	322	-.146	.106	.208	-.594	280	414	.008	.138	.452	-.496
280	245	-.104	.103	.302	-.478	280	323	-.145	.111	.252	-.574	280	415	-.007	.120	.420	-.447

WD	TAP	CPMEAN	CPRMS	CPMAX	CPMIN	WD	TAP	CPMEAN	CPRMS	CPMAX	CPMIN	WD	TAP	CPMEAN	CPRMS	CPMAX	CPMIN
280	416	-.025	.109	.455	-.412	280	466	.014	.117	.384	-.459	280	610	-.175	.153	.368	-.985
280	417	-.041	.121	.609	-.479	280	467	.021	.117	.391	-.452	280	611	-.332	.221	.305	-1.289
280	418	-.080	.118	.368	-.444	280	468	.030	.117	.384	-.366	280	612	-.361	.221	.239	-1.546
280	419	-.120	.114	.239	-.504	280	469	.015	.109	.401	-.360	280	613	-.151	.129	.254	-.742
280	420	-.091	.231	.710	-1.000	280	470	-.013	.122	.453	-.469	280	614	-.154	.146	.367	-.876
280	421	-.044	.217	.720	-1.086	280	471	-.011	.114	.398	-.469	280	615	-.276	.205	.237	-1.286
280	422	.028	.124	.429	-.600	280	472	.008	.118	.364	-.390	280	616	-.314	.197	.159	-1.310
280	423	.012	.119	.440	-.406	280	501	.094	.175	.868	-.432	280	617	-.140	.123	.277	-.625
280	424	-.008	.108	.422	-.364	280	502	.162	.221	.925	-.486	280	618	-.150	.129	.249	-.869
280	425	-.036	.116	.316	-.443	280	503	.215	.269	1.289	-.490	280	619	-.241	.171	.219	-1.255
280	426	-.083	.120	.408	-.522	280	504	.224	.274	1.118	-.883	280	620	-.307	.179	.227	-1.199
280	427	-.117	.114	.336	-.531	280	505	.136	.200	.774	-.633	280	621	-.139	.126	.241	-.939
280	428	-.032	.187	.520	-.996	280	506	.209	.212	.943	-.427	280	622	-.147	.126	.217	-.674
280	429	-.016	.164	.429	-.826	280	507	.264	.265	1.205	-.368	280	623	-.238	.143	.209	-.943
280	430	.027	.132	.434	-.622	280	508	.180	.232	1.064	-.437	280	624	-.265	.167	.195	-1.179
280	431	.020	.118	.462	-.452	280	509	.135	.172	.733	-.442	280	625	-.134	.108	.224	-.515
280	432	-.002	.110	.363	-.420	280	510	.156	.186	.866	-.440	280	626	-.148	.112	.268	-.597
280	433	-.030	.108	.396	-.364	280	511	.190	.209	.869	-.439	280	627	-.163	.124	.249	-.652
280	434	-.074	.105	.250	-.410	280	512	.138	.207	1.097	-.414	280	628	-.177	.133	.276	-.828
280	435	-.110	.119	.230	-.600	280	513	.071	.152	.717	-.410	280	629	-.140	.116	.181	-.628
280	436	-.010	.151	.461	-.895	280	514	.093	.171	.900	-.399	280	630	-.161	.112	.202	-.611
280	437	.018	.142	.439	-1.057	280	515	.098	.186	.854	-.519	280	631	-.141	.111	.203	-.509
280	438	.032	.123	.471	-.386	280	516	.071	.169	.735	-.422	280	632	-.168	.118	.212	-.616
280	439	.026	.112	.513	-.388	280	517	.024	.132	.628	-.388	280	633	-.104	.111	.282	-.494
280	440	-.001	.112	.381	-.344	280	518	.057	.143	.598	-.373	280	634	-.147	.122	.277	-.584
280	441	-.026	.105	.302	-.376	280	519	.041	.143	.562	-.605	280	801	-.147	.122	.314	-.638
280	442	-.074	.111	.297	-.448	280	520	.029	.153	.703	-.575	280	802	-.139	.106	.212	-.574
280	443	-.101	.108	.213	-.506	280	521	.006	.126	.489	-.459	280	803	-.021	.118	.399	-.473
280	444	.001	.120	.361	-.647	280	522	.014	.122	.437	-.363	280	804	-.137	.110	.198	-.580
280	445	.026	.119	.430	-.544	280	523	.033	.145	.555	-.563	280	805	-.111	.115	.241	-.529
280	446	.036	.109	.422	-.387	280	524	.028	.145	.523	-.479	280	806	-.150	.110	.226	-.519
280	447	.032	.107	.447	-.330	280	525	-.008	.114	.333	-.384	280	807	-.129	.113	.268	-.497
280	448	.005	.101	.388	-.343	280	526	.004	.112	.406	-.351	280	808	-.160	.106	.188	-.621
280	449	-.028	.107	.346	-.348	280	527	.003	.112	.413	-.474	280	809	-.171	.120	.205	-.655
280	450	-.075	.101	.247	-.383	280	528	-.006	.136	.548	-.572	280	810	.006	.113	.481	-.353
280	451	-.110	.113	.237	-.486	280	529	-.019	.124	.381	-.464	280	811	-.002	.104	.304	-.398
280	452	-.002	.111	.435	-.446	280	530	-.010	.111	.343	-.431	280	812	-.015	.111	.339	-.443
280	453	.006	.104	.480	-.546	280	531	.007	.112	.406	-.363	280	813	-.030	.110	.346	-.419
280	454	.009	.109	.354	-.481	280	532	-.010	.115	.364	-.440	280	814	-.052	.126	.443	-.502
280	455	.013	.109	.365	-.343	280	533	.016	.121	.434	-.495	280	815	-.032	.117	.385	-.499
280	456	-.007	.111	.359	-.439	280	534	.020	.125	.543	-.445	280	901	-.120	.125	.348	-.737
280	457	-.026	.110	.333	-.378	280	601	-.145	.137	.254	-1.100	280	902	-.138	.150	.368	-1.007
280	458	-.078	.110	.254	-.461	280	602	-.148	.145	.312	-.891	280	903	-.121	.123	.282	-.595
280	459	-.113	.117	.287	-.553	280	603	-.306	.230	.383	-1.353	280	904	.011	.122	.376	-.444
280	460	-.013	.122	.420	-.491	280	604	-.427	.261	.307	-1.683	280	905	-.068	.152	.775	-.597
280	461	.012	.123	.507	-.442	280	605	-.162	.144	.239	-.965	280	906	-.125	.110	.248	-.514
280	462	.002	.118	.383	-.341	280	606	-.185	.167	.365	-1.239	280	907	-.195	.144	.229	-.884
280	463	-.030	.113	.330	-.389	280	607	-.360	.240	.280	-1.404	280	908	-.111	.121	.303	-.560
280	464	-.083	.117	.282	-.541	280	608	-.404	.237	.331	-1.456	280	909	-.089	.145	.434	-.837
280	465	-.114	.114	.234	-.546	280	609	-.158	.138	.226	-1.162	280	910	-.170	.140	.271	-.814

WD	TAP	CPMEAN	CPRMS	CPMAX	CPMIN	WD	TAP	CPMEAN	CPRMS	CPMAX	CPMIN	WD	TAP	CPMEAN	CPRMS	CPMAX	CPMIN
280	911	-.164	.156	.338	-.923	280	1214	-.012	.110	.439	-.439	280	1405	-.066	.109	.234	-.547
280	912	-.116	.139	.457	-.609	280	1215	-.025	.101	.350	-.357	280	1406	-.036	.128	.346	-.490
280	913	-.201	.180	.385	-1.076	280	1216	-.002	.108	.433	-.313	280	1407	.012	.119	.414	-.498
280	914	-.159	.184	.526	-.902	280	1217	-.064	.098	.303	-.403	280	1408	-.048	.103	.365	-.363
280	915	-.121	.173	.487	-1.007	280	1218	-.055	.100	.412	-.391	280	1409	-.106	.099	.219	-.438
280	916	-.165	.146	.406	-.718	280	1219	-.088	.090	.270	-.380	280	1410	-.090	.103	.269	-.401
280	917	-.202	.151	.266	-1.207	280	1220	-.038	.100	.296	-.350	280	1411	-.054	.104	.408	-.472
280	918	-.190	.172	.350	-1.321	280	1221	-.017	.112	.373	-.396	280	1412	-.025	.112	.346	-.386
280	919	-.106	.182	.555	-.835	280	1222	-.062	.098	.216	-.445	280	1413	-.044	.118	.422	-.412
280	920	-.162	.164	.336	-1.067	280	1223	-.082	.100	.280	-.408	280	1414	-.086	.095	.182	-.417
280	921	-.218	.180	.459	-1.111	280	1224	.031	.097	.345	-.275	280	1415	-.084	.102	.256	-.508
280	1101	-.075	.109	.238	-.531	280	1225	-.021	.100	.349	-.378	280	1416	-.028	.096	.289	-.334
280	1102	-.087	.111	.270	-.532	280	1226	-.033	.104	.332	-.484	280	1417	-.015	.102	.326	-.316
280	1103	-.074	.110	.313	-.573	280	1227	-.062	.091	.277	-.388	280	1418	-.034	.114	.386	-.417
280	1104	-.112	.098	.209	-.432	280	1228	-.074	.103	.228	-.398	280	1419	-.044	.103	.323	-.390
280	1105	-.100	.097	.173	-.536	280	1229	-.058	.103	.285	-.437	280	1420	-.051	.124	.403	-.436
280	1106	-.147	.104	.207	-.518	280	1301	-.003	.106	.367	-.335	280	1421	-.017	.121	.465	-.424
280	1107	-.094	.094	.200	-.416	280	1302	.036	.112	.566	-.375	280	1422	-.060	.107	.343	-.379
280	1108	-.098	.100	.221	-.432	280	1303	.032	.115	.536	-.353	280	1423	-.028	.096	.350	-.361
280	1109	-.110	.103	.264	-.472	280	1304	-.025	.097	.337	-.336	280	1424	-.015	.102	.335	-.417
280	1110	-.059	.098	.400	-.389	280	1305	.011	.108	.385	-.324	280	1425	-.006	.110	.417	-.353
280	1111	-.067	.095	.261	-.422	280	1306	.037	.115	.441	-.312	280	1426	-.039	.107	.348	-.388
280	1112	-.118	.102	.272	-.515	280	1307	.002	.110	.483	-.365	280	1427	-.047	.094	.324	-.365
280	1113	-.091	.105	.225	-.395	280	1308	-.033	.109	.303	-.404	280	1428	-.032	.099	.266	-.348
280	1114	-.091	.098	.217	-.445	280	1309	-.014	.104	.363	-.429	280	1429	-.009	.108	.334	-.384
280	1115	-.099	.096	.189	-.449	280	1311	.028	.114	.427	-.368	280	1430	.007	.108	.411	-.424
280	1116	-.080	.106	.286	-.593	280	1312	.033	.104	.371	-.339	280	1431	.012	.111	.386	-.337
280	1117	-.070	.105	.224	-.424	280	1313	.039	.122	.681	-.303	280	1432	-.033	.099	.325	-.335
280	1118	-.105	.103	.292	-.481	280	1314	.017	.101	.343	-.300	280	1433	-.029	.103	.305	-.409
280	1119	-.089	.096	.238	-.433	280	1315	-.018	.111	.361	-.365	280	1434	-.060	.136	.588	-.571
280	1120	-.124	.100	.193	-.485	280	1316	-.022	.105	.351	-.432	280	1435	-.062	.140	.404	-.688
280	1121	-.084	.112	.368	-.461	280	1317	.020	.103	.387	-.451	280	1901	-.072	.103	.280	-.395
280	1122	-.085	.115	.390	-.477	280	1318	.010	.113	.462	-.355	280	1902	.053	.091	.335	-.229
280	1123	-.078	.103	.277	-.437	280	1319	.014	.103	.380	-.311	280	1903	.162	.086	.462	-.155
280	1124	-.101	.099	.194	-.464	280	1320	.013	.098	.347	-.295	280	1904	-.027	.107	.376	-.400
280	1125	-.064	.096	.226	-.431	280	1321	.011	.093	.310	-.316	280	1905	.008	.101	.342	-.283
280	1126	-.059	.100	.290	-.358	280	1322	-.013	.103	.319	-.318	280	1906	-.047	.102	.286	-.391
280	1201	-.070	.103	.297	-.471	280	1323	-.020	.097	.324	-.330	280	1907	-.061	.106	.243	-.442
280	1202	-.084	.116	.289	-.514	280	1324	.032	.099	.369	-.297	280	1908	-.065	.119	.351	-.454
280	1203	-.074	.107	.289	-.480	280	1325	.038	.101	.355	-.294	280	1909	-.058	.108	.299	-.437
280	1204	-.075	.110	.260	-.478	280	1326	.034	.097	.396	-.332	280	1910	-.064	.107	.231	-.451
280	1205	-.080	.127	.295	-.566	280	1327	.036	.098	.348	-.332	280	1911	-.081	.100	.205	-.410
280	1206	-.085	.122	.286	-.524	280	1328	.018	.100	.406	-.314	280	1912	-.092	.102	.219	-.436
280	1207	-.078	.113	.281	-.452	280	1329	-.010	.114	.411	-.327	280	1913	-.093	.099	.260	-.432
280	1208	-.033	.107	.370	-.383	280	1330	-.000	.106	.391	-.386	280	1914	-.106	.098	.279	-.432
280	1209	-.015	.109	.376	-.342	280	1331	.000	.107	.394	-.398	280	1915	-.103	.101	.219	-.420
280	1210	-.055	.104	.320	-.378	280	1401	-.035	.114	.331	-.433	280	1916	-.071	.133	.395	-.504
280	1211	-.053	.108	.375	-.403	280	1402	-.102	.100	.230	-.440	280	1917	-.063	.125	.369	-.606
280	1212	-.095	.094	.208	-.368	280	1403	-.032	.138	.502	-.448	280	1918	-.045	.110	.310	-.439
280	1213	-.120	.105	.270	-.444	280	1404	.022	.121	.463	-.346	280	1919	-.049	.108	.378	-.364

WD	TAP	CPMEAN	CPRMS	CPMAX	CPMIN	WD	TAP	CPMEAN	CPRMS	CPMAX	CPMIN	WD	TAP	CPMEAN	CPRMS	CPMAX	CPMIN
280	1920	-.039	.108	.352	-.436	290	102	-.076	.210	.691	-.950	290	152	.113	.143	.597	-.534
280	1921	-.109	.108	.187	-.541	290	103	.122	.283	1.476	-.714	290	153	.115	.142	.653	-.373
280	1922	-.099	.102	.255	-.514	290	104	.463	.215	1.312	-.200	290	154	.092	.176	.829	-.611
280	1923	-.105	.104	.277	-.449	290	105	.421	.222	1.149	-.331	290	155	.152	.184	.924	-.491
280	1924	-.081	.113	.296	-.562	290	106	.312	.220	1.076	-.404	290	156	.130	.167	.857	-.479
280	1925	-.091	.112	.438	-.534	290	107	.190	.224	.995	-.592	290	157	.084	.158	.820	-.428
280	1926	-.083	.101	.315	-.425	290	108	.075	.210	.946	-.520	290	158	.057	.129	.475	-.392
280	1927	-.116	.103	.191	-.460	290	109	-.115	.193	.752	-1.409	290	159	.022	.138	.507	-.475
280	1928	-.133	.117	.232	-.562	290	110	-.169	.178	.462	-1.127	290	160	.026	.131	.507	-.705
280	1929	-.114	.114	.274	-.503	290	111	-.086	.172	.451	-1.008	290	161	.060	.134	.527	-.382
280	1930	-.067	.111	.312	-.451	290	112	.062	.153	.525	-.530	290	162	.072	.135	.578	-.500
280	1931	-.052	.105	.523	-.422	290	113	.102	.175	.668	-.495	290	163	.078	.131	.509	-.518
280	1932	-.039	.103	.322	-.355	290	114	.532	.237	1.396	-.147	290	164	-.016	.149	.518	-.594
280	1933	-.118	.115	.213	-.550	290	115	.547	.250	1.524	-.292	290	165	-.001	.148	.574	-.514
280	1934	-.147	.121	.272	-.551	290	116	.479	.252	1.448	-.303	290	166	-.037	.135	.578	-.562
280	1935	-.133	.115	.177	-.619	290	117	.363	.265	1.168	-.341	290	167	-.015	.127	.497	-.447
280	1936	-.116	.115	.453	-.498	290	118	.192	.210	.909	-.364	290	168	.037	.136	.597	-.459
280	1937	-.081	.107	.376	-.429	290	119	.032	.159	.696	-.460	290	169	.056	.127	.590	-.475
280	1938	-.030	.113	.407	-.400	290	120	-.048	.150	.451	-1.032	290	170	.057	.122	.489	-.406
280	1939	-.028	.107	.566	-.370	290	121	.100	.164	.693	-.999	290	171	.056	.134	.516	-.422
280	1940	-.054	.134	.377	-.536	290	122	.192	.174	.869	-.525	290	172	.045	.117	.485	-.407
280	1941	-.069	.111	.303	-.534	290	123	.230	.179	.862	-.389	290	173	.046	.122	.484	-.392
280	1942	-.058	.117	.379	-.472	290	124	.402	.248	1.221	-.555	290	174	-.155	.137	.353	-.567
280	1943	-.053	.109	.355	-.336	290	125	.453	.260	1.429	-.320	290	175	-.038	.123	.303	-.481
280	1944	-.047	.100	.320	-.463	290	126	.345	.286	1.380	-.567	290	176	.017	.115	.485	-.389
280	1945	-.048	.111	.314	-.577	290	127	.241	.233	1.277	-.401	290	177	.054	.127	.497	-.382
280	1946	-.007	.116	.396	-.460	290	128	.154	.188	.929	-.357	290	178	.049	.115	.504	-.450
280	1947	-.028	.116	.438	-.419	290	129	.057	.175	.869	-.518	290	179	.016	.116	.448	-.375
280	1948	-.037	.110	.417	-.460	290	130	.083	.160	.618	-.445	290	180	-.110	.111	.301	-.476
280	1949	-.044	.106	.455	-.365	290	131	.190	.172	.777	-.526	290	181	.048	.118	.422	-.335
280	1950	-.044	.105	.311	-.353	290	132	.238	.169	.804	-.380	290	182	.065	.118	.525	-.283
280	1951	-.084	.103	.261	-.463	290	133	.271	.177	.922	-.316	290	183	.065	.124	.489	-.293
280	1952	-.068	.119	.357	-.502	290	134	.251	.229	1.159	-.670	290	184	-.067	.125	.402	-.465
280	1953	-.015	.128	.469	-.457	290	135	.323	.244	1.272	-.613	290	185	.047	.131	.652	-.449
280	1954	-.027	.118	.427	-.445	290	136	.214	.218	1.062	-.592	290	186	.083	.128	.610	-.295
280	1955	-.030	.106	.360	-.394	290	137	.141	.203	1.032	-.526	290	187	.091	.131	.549	-.323
280	1956	-.015	.116	.352	-.427	290	138	.103	.167	.841	-.373	290	201	-.158	.124	.302	-.585
280	1957	-.030	.126	.420	-.488	290	139	.038	.157	.732	-.526	290	202	-.246	.143	.210	-.907
280	1958	-.032	.112	.302	-.377	290	140	.067	.157	.661	-.519	290	203	-.262	.152	.186	-1.001
280	1959	-.030	.105	.470	-.380	290	141	.161	.162	.786	-.473	290	204	-.174	.132	.325	-.680
280	1960	-.022	.113	.417	-.384	290	142	.177	.168	.968	-.311	290	205	-.158	.114	.277	-.635
280	1961	-.024	.102	.355	-.373	290	143	.187	.161	.751	-.574	290	206	-.163	.122	.239	-.721
280	1962	.018	.110	.532	-.370	290	144	.179	.205	1.021	-.481	290	207	-.152	.125	.337	-.613
280	1963	.036	.110	.541	-.315	290	145	.205	.212	.974	-.770	290	208	-.171	.126	.253	-.617
280	1964	.025	.131	.424	-.452	290	146	.175	.195	1.069	-.420	290	209	-.164	.124	.232	-.694
280	1965	-.043	.115	.312	-.437	290	147	.090	.167	.871	-.484	290	210	-.158	.124	.330	-.584
280	1966	-.045	.118	.343	-.452	290	148	.068	.144	.691	-.486	290	211	-.161	.140	.299	-.580
280	1967	-.032	.110	.391	-.339	290	149	.023	.151	.550	-.511	290	212	-.171	.112	.200	-.532
280	1968	-.022	.110	.393	-.370	290	150	.043	.152	.599	-.555	290	213	-.170	.118	.188	-.561
290	101	-.160	.188	.605	-.884	290	151	.104	.135	.618	-.396	290	214	-.197	.128	.192	-.736

WD	TAP	CPMEAN	CPRMS	CPMAX	CPMIN	WD	TAP	CPMEAN	CPRMS	CPMAX	CPMIN	WD	TAP	CPMEAN	CPRMS	CPMAX	CPMIN
290	215	-.163	.112	.170	-.576	290	265	-.212	.127	.228	-.646	290	343	-.250	.154	.221	-1.058
290	216	-.158	.125	.226	-.626	290	266	-.213	.126	.183	-.760	290	344	-.241	.126	.267	-.835
290	217	-.152	.125	.228	-.569	290	267	-.209	.127	.245	-.623	290	345	-.251	.152	.206	-.947
290	218	-.158	.129	.334	-.640	290	268	-.200	.124	.213	-.851	290	346	-.260	.158	.167	-.977
290	219	-.157	.135	.269	-.714	290	269	-.203	.129	.156	-.755	290	347	-.263	.154	.270	-.818
290	220	-.184	.123	.226	-.698	290	270	-.206	.122	.186	-.631	290	348	-.240	.141	.193	-.871
290	221	-.167	.114	.191	-.543	290	271	-.216	.125	.183	-.708	290	349	-.252	.138	.226	-.953
290	222	-.164	.113	.286	-.617	290	272	-.207	.116	.175	-.950	290	350	-.239	.131	.204	-.743
290	223	-.150	.123	.327	-.589	290	301	-.211	.142	.262	-1.156	290	351	-.229	.132	.223	-.866
290	224	-.162	.114	.200	-.594	290	302	-.215	.151	.264	-.966	290	352	-.234	.148	.297	-.792
290	225	-.158	.112	.293	-.518	290	303	-.211	.144	.253	-.845	290	353	-.236	.131	.111	-.731
290	226	-.156	.125	.251	-.568	290	304	-.202	.137	.209	-.755	290	354	-.221	.133	.252	-.836
290	227	-.151	.133	.242	-.788	290	305	-.211	.136	.228	-.655	290	355	-.232	.137	.279	-.768
290	228	-.178	.114	.263	-.636	290	306	-.213	.140	.233	-.832	290	356	-.245	.143	.206	-.758
290	229	-.164	.135	.223	-.647	290	307	-.211	.129	.188	-.783	290	357	-.218	.134	.148	-.661
290	230	-.158	.124	.239	-.606	290	308	-.204	.132	.223	-.716	290	358	-.213	.130	.252	-.715
290	231	-.155	.120	.392	-.591	290	309	-.212	.133	.250	-.733	290	401	.114	.248	1.069	-1.074
290	232	-.159	.113	.228	-.547	290	310	-.209	.120	.174	-.660	290	402	-.102	.152	.455	-.750
290	233	-.157	.126	.202	-.666	290	311	-.194	.124	.175	-.671	290	403	-.056	.147	.495	-.543
290	234	-.155	.123	.249	-.710	290	312	-.220	.131	.259	-.654	290	404	-.228	.274	.767	-1.458
290	235	-.148	.135	.293	-.682	290	313	-.213	.134	.286	-.894	290	405	-.118	.258	.632	-1.043
290	236	-.173	.129	.181	-.842	290	314	-.222	.126	.221	-.682	290	406	.004	.147	.788	-.710
290	237	-.176	.125	.228	-.610	290	315	-.220	.124	.195	-.669	290	407	-.015	.127	.500	-.451
290	238	-.169	.116	.253	-.573	290	316	-.195	.105	.170	-.639	290	408	-.018	.136	.469	-.525
290	239	-.153	.121	.283	-.601	290	317	-.213	.125	.239	-.714	290	409	-.049	.133	.764	-.581
290	240	-.158	.120	.244	-.568	290	318	-.219	.120	.188	-.625	290	410	-.088	.130	.476	-.624
290	241	-.165	.120	.253	-.612	290	319	-.209	.128	.201	-.615	290	411	-.139	.133	.293	-.600
290	242	-.168	.129	.371	-.638	290	320	-.204	.127	.210	-.733	290	412	-.194	.266	.941	-1.136
290	243	-.158	.128	.265	-.747	290	321	-.211	.127	.277	-.673	290	413	-.147	.297	.726	-1.441
290	244	-.203	.132	.188	-.716	290	322	-.207	.123	.208	-.702	290	414	.054	.170	.572	-.748
290	245	-.200	.134	.211	-.760	290	323	-.210	.132	.230	-.691	290	415	.035	.123	.493	-.454
290	246	-.204	.125	.178	-.768	290	324	-.226	.124	.239	-.820	290	416	-.003	.115	.446	-.383
290	247	-.191	.115	.193	-.596	290	325	-.218	.132	.221	-.662	290	417	-.048	.126	.415	-.599
290	248	-.210	.122	.233	-.628	290	326	-.205	.136	.232	-.832	290	418	-.124	.128	.328	-.552
290	249	-.215	.122	.163	-.778	290	327	-.220	.135	.206	-.838	290	419	-.172	.123	.241	-.577
290	250	-.203	.129	.221	-.703	290	328	-.214	.127	.121	-.791	290	420	-.166	.268	.722	-1.718
290	251	-.207	.119	.176	-.678	290	329	-.216	.135	.190	-1.018	290	421	-.118	.315	.795	-1.357
290	252	-.212	.130	.153	-.640	290	330	-.234	.141	.163	-.774	290	422	.058	.180	.614	-1.023
290	253	-.218	.140	.194	-.765	290	331	-.220	.128	.126	-.720	290	423	.046	.139	.612	-.431
290	254	-.244	.144	.161	-.794	290	332	-.210	.135	.194	-1.076	290	424	-.001	.123	.533	-.415
290	255	-.216	.122	.194	-.609	290	333	-.221	.134	.234	-.745	290	425	-.044	.114	.327	-.407
290	256	-.230	.140	.217	-.778	290	334	-.201	.079	.078	-.397	290	426	-.121	.127	.317	-.534
290	257	-.230	.134	.230	-.669	290	335	-.234	.139	.157	-.943	290	427	-.168	.130	.220	-.609
290	258	-.230	.139	.170	-.940	290	336	-.231	.137	.210	-.998	290	428	-.125	.262	.755	-1.387
290	259	-.231	.143	.195	-1.290	290	337	-.232	.127	.155	-.745	290	429	-.080	.273	.760	-1.440
290	260	-.238	.128	.178	-.738	290	338	-.246	.165	.224	-1.112	290	430	.053	.174	.669	-1.174
290	261	-.215	.142	.156	-.756	290	339	-.236	.135	.177	-.867	290	431	.038	.125	.467	-.603
290	262	-.214	.129	.208	-.709	290	340	-.242	.144	.239	-.987	290	432	-.006	.121	.455	-.433
290	263	-.214	.120	.241	-.584	290	341	-.225	.133	.191	-.721	290	433	-.051	.129	.416	-.481
290	264	-.210	.121	.141	-.726	290	342	-.238	.146	.177	-1.316	290	434	-.118	.124	.321	-.510

WD	TAP	CPMEAN	CPRMS	CPMAX	CPMIN	WD	TAP	CPMEAN	CPRMS	CPMAX	CPMIN	WD	TAP	CPMEAN	CPRMS	CPMAX	CPMIN
290	435	-.165	.124	.250	-.666	290	513	.262	.161	.937	-.237	290	629	-.227	.121	.149	-.724
290	436	-.095	.220	.562	-1.403	290	514	.310	.175	.875	-.250	290	630	-.247	.137	.181	-.685
290	437	-.063	.230	.797	-1.389	290	515	.346	.179	.957	-.205	290	631	-.213	.125	.209	-.620
290	438	.032	.151	.703	-1.163	290	516	.314	.195	1.083	-.208	290	632	-.299	.138	.154	-.770
290	439	.012	.119	.392	-.356	290	517	.179	.153	.761	-.385	290	633	-.106	.124	.467	-.491
290	440	-.024	.121	.427	-.430	290	518	.213	.149	.704	-.266	290	634	-.214	.153	.313	-.688
290	441	-.067	.122	.341	-.433	290	519	.242	.156	.877	-.188	290	801	-.215	.123	.151	-.588
290	442	-.124	.120	.235	-.583	290	520	.232	.169	1.130	-.239	290	802	-.227	.136	.209	-.765
290	443	-.171	.123	.218	-.620	290	521	.120	.134	.590	-.266	290	803	.052	.117	.537	-.317
290	444	-.083	.180	.461	-.928	290	522	.159	.134	.677	-.250	290	804	-.209	.121	.218	-.697
290	445	-.040	.178	.463	-.892	290	523	.179	.162	.816	-.264	290	805	-.187	.146	.228	-.904
290	446	.009	.132	.406	-.750	290	524	.167	.154	.724	-.343	290	806	-.239	.142	.236	-.934
290	447	-.006	.119	.372	-.390	290	525	.054	.130	.581	-.461	290	807	-.210	.123	.166	-.714
290	448	-.028	.112	.377	-.456	290	526	.059	.122	.568	-.321	290	808	-.243	.117	.134	-.625
290	449	-.068	.116	.326	-.463	290	527	.056	.119	.480	-.355	290	809	-.262	.133	.214	-.794
290	450	-.139	.125	.448	-.628	290	528	.046	.122	.544	-.363	290	810	.052	.115	.448	-.327
290	451	-.195	.141	.279	-.830	290	529	.014	.118	.536	-.424	290	811	.023	.115	.403	-.347
290	452	-.063	.141	.397	-.632	290	530	.000	.123	.401	-.458	290	812	.029	.118	.453	-.299
290	453	-.034	.130	.339	-.652	290	531	.051	.118	.437	-.325	290	813	.002	.115	.345	-.421
290	454	-.005	.133	.379	-.466	290	532	.002	.127	.489	-.410	290	814	.016	.120	.475	-.568
290	455	-.021	.122	.364	-.417	290	533	.113	.133	.546	-.338	290	815	-.018	.119	.328	-.381
290	456	-.036	.109	.299	-.421	290	534	.060	.130	.534	-.437	290	901	-.152	.122	.302	-.602
290	457	-.070	.118	.301	-.401	290	601	-.149	.141	.324	-.787	290	902	-.199	.143	.308	-1.078
290	458	-.133	.116	.277	-.545	290	602	-.152	.162	.353	-.842	290	903	-.139	.124	.236	-.667
290	459	-.200	.140	.241	-.806	290	603	-.392	.277	.521	-1.405	290	904	-.039	.138	.437	-.590
290	460	-.114	.143	.279	-.711	290	604	-.586	.303	.321	-2.184	290	905	-.040	.130	.497	-.532
290	461	-.052	.127	.469	-.473	290	605	-.183	.156	.289	-.886	290	906	-.165	.124	.234	-.606
290	462	-.031	.114	.339	-.405	290	606	-.225	.201	.327	-1.229	290	907	-.273	.169	.222	-.952
290	463	-.065	.117	.366	-.426	290	607	-.508	.274	.334	-1.735	290	908	-.135	.129	.351	-.773
290	464	-.137	.115	.253	-.557	290	608	-.540	.228	.487	-1.399	290	909	-.144	.168	.374	-.833
290	465	-.193	.137	.250	-.928	290	609	-.218	.174	.381	-1.317	290	910	-.245	.157	.322	-.789
290	466	-.063	.125	.297	-.489	290	610	-.253	.196	.281	-1.227	290	911	-.200	.177	.311	-1.251
290	467	-.048	.116	.331	-.439	290	611	-.485	.251	.341	-1.437	290	912	-.114	.154	.371	-.738
290	468	-.024	.113	.391	-.436	290	612	-.556	.250	.253	-1.706	290	913	-.280	.176	.204	-1.045
290	469	-.005	.118	.425	-.506	290	613	-.211	.165	.276	-1.187	290	914	-.240	.215	.502	-1.263
290	470	-.052	.113	.342	-.449	290	614	-.219	.166	.291	-1.115	290	915	-.163	.188	.435	-1.060
290	471	-.043	.112	.344	-.410	290	615	-.434	.229	.207	-1.419	290	916	-.233	.148	.259	-.873
290	472	-.057	.128	.366	-.602	290	616	-.492	.245	.370	-1.890	290	917	-.243	.155	.220	-.910
290	501	.287	.181	1.017	-.285	290	617	-.215	.144	.207	-.861	290	918	-.248	.167	.287	-1.055
290	502	.383	.209	1.045	-.370	290	618	-.231	.157	.398	-.851	290	919	-.027	.228	.617	-.779
290	503	.487	.219	1.467	-.207	290	619	-.399	.214	.223	-1.192	290	920	-.202	.180	.392	-.999
290	504	.513	.243	1.248	-.277	290	620	-.434	.218	.234	-1.394	290	921	-.296	.173	.220	-1.127
290	505	.358	.196	1.086	-.197	290	621	-.217	.132	.186	-.817	290	1101	-.014	.101	.318	-.387
290	506	.462	.223	1.237	-.197	290	622	-.241	.147	.204	-.834	290	1102	-.012	.113	.376	-.495
290	507	.559	.252	1.464	-.219	290	623	-.347	.172	.109	-1.360	290	1103	-.017	.113	.357	-.380
290	508	.512	.260	1.393	-.170	290	624	-.395	.183	.159	-1.262	290	1104	-.152	.102	.205	-.604
290	509	.350	.196	1.139	-.279	290	625	-.215	.118	.162	-.772	290	1105	-.133	.101	.188	-.573
290	510	.401	.194	1.192	-.168	290	626	-.219	.127	.212	-.762	290	1106	-.188	.126	.187	-.669
290	511	.416	.214	1.112	-.145	290	627	-.284	.144	.132	-1.123	290	1107	-.078	.106	.287	-.452
290	512	.393	.235	1.508	-.254	290	628	-.292	.161	.186	-1.430	290	1108	-.084	.105	.313	-.424

WD	TAP	CPMEAN	CPRMS	CPMAX	CPMIN	WD	TAP	CPMEAN	CPRMS	CPMAX	CPMIN	WD	TAP	CPMEAN	CPRMS	CPMAX	CPMIN
290	1109	-.115	.107	.190	-.516	290	1304	.029	.113	.445	-.458	290	1424	.033	.105	.430	-.325
290	1110	-.052	.111	.308	-.363	290	1305	.081	.124	.534	-.261	290	1425	.047	.111	.378	-.325
290	1111	-.074	.118	.267	-.462	290	1306	.125	.129	.610	-.256	290	1426	.038	.113	.453	-.295
290	1112	-.179	.112	.195	-.563	290	1307	.127	.135	.776	-.276	290	1427	-.010	.103	.419	-.338
290	1113	-.074	.113	.369	-.445	290	1308	.022	.116	.407	-.455	290	1428	.007	.098	.313	-.343
290	1114	-.086	.105	.259	-.395	290	1309	.041	.111	.473	-.294	290	1429	.037	.093	.403	-.251
290	1115	-.059	.104	.283	-.368	290	1311	.117	.119	.559	-.256	290	1430	.049	.103	.483	-.277
290	1116	-.044	.102	.323	-.404	290	1312	.144	.132	.732	-.269	290	1431	.068	.114	.479	-.312
290	1117	-.084	.105	.341	-.416	290	1313	.157	.138	.798	-.300	290	1432	.035	.111	.453	-.313
290	1118	-.097	.113	.239	-.544	290	1314	.062	.107	.496	-.315	290	1433	.042	.108	.407	-.379
290	1119	-.103	.102	.210	-.548	290	1315	.067	.122	.534	-.343	290	1434	.049	.119	.510	-.372
290	1120	-.191	.119	.249	-.625	290	1316	.056	.114	.475	-.322	290	1435	.032	.121	.432	-.398
290	1121	-.083	.117	.333	-.463	290	1317	.078	.112	.501	-.328	290	1901	-.029	.101	.347	-.377
290	1122	-.085	.118	.357	-.505	290	1318	.079	.118	.506	-.320	290	1902	.105	.089	.424	-.216
290	1123	-.072	.103	.276	-.412	290	1319	.050	.110	.386	-.305	290	1903	.199	.090	.478	-.113
290	1124	-.133	.104	.210	-.697	290	1320	.042	.109	.425	-.286	290	1904	.032	.103	.402	-.269
290	1125	-.031	.095	.315	-.350	290	1321	.056	.095	.410	-.236	290	1905	.054	.097	.425	-.330
290	1126	-.021	.100	.332	-.353	290	1322	.054	.108	.420	-.297	290	1906	.012	.102	.456	-.297
290	1201	-.009	.098	.315	-.316	290	1323	.044	.119	.543	-.399	290	1907	-.032	.114	.353	-.519
290	1202	-.018	.115	.410	-.432	290	1324	.093	.114	.525	-.248	290	1908	-.033	.121	.403	-.470
290	1203	-.003	.109	.380	-.328	290	1325	.086	.111	.450	-.255	290	1909	-.037	.117	.572	-.551
290	1204	-.006	.111	.437	-.360	290	1326	.093	.112	.612	-.250	290	1910	-.034	.113	.479	-.368
290	1205	.004	.124	.399	-.517	290	1327	.073	.115	.410	-.305	290	1911	-.037	.116	.368	-.451
290	1206	.003	.121	.468	-.478	290	1328	.067	.113	.476	-.241	290	1912	-.077	.098	.251	-.400
290	1207	-.009	.107	.422	-.440	290	1329	.053	.121	.465	-.348	290	1913	-.067	.108	.297	-.400
290	1208	-.007	.116	.434	-.382	290	1330	.057	.128	.666	-.478	290	1914	-.071	.115	.408	-.493
290	1209	.039	.118	.504	-.357	290	1331	.062	.125	.685	-.363	290	1915	-.091	.104	.221	-.424
290	1210	-.040	.110	.515	-.365	290	1401	.063	.116	.487	-.265	290	1916	.001	.117	.464	-.367
290	1211	.015	.118	.511	-.323	290	1402	-.043	.112	.347	-.454	290	1917	.020	.142	.528	-.759
290	1212	-.096	.113	.330	-.611	290	1403	.052	.125	.493	-.387	290	1918	-.006	.119	.469	-.498
290	1213	-.166	.108	.172	-.582	290	1404	.105	.130	.597	-.300	290	1919	-.018	.126	.603	-.507
290	1214	.029	.121	.493	-.384	290	1405	.006	.111	.446	-.409	290	1920	-.018	.124	.694	-.476
290	1215	.057	.119	.524	-.261	290	1406	.056	.118	.482	-.340	290	1921	-.081	.108	.228	-.497
290	1216	.078	.110	.464	-.267	290	1407	.083	.119	.660	-.309	290	1922	-.068	.097	.213	-.387
290	1217	-.062	.109	.338	-.391	290	1408	-.012	.118	.401	-.429	290	1923	-.070	.103	.351	-.428
290	1218	-.039	.103	.353	-.421	290	1409	-.119	.110	.210	-.535	290	1924	-.016	.115	.348	-.421
290	1219	-.112	.105	.281	-.474	290	1410	-.076	.096	.257	-.433	290	1925	-.022	.123	.549	-.521
290	1220	-.015	.097	.324	-.364	290	1411	-.016	.100	.305	-.369	290	1926	-.062	.111	.449	-.466
290	1221	.055	.103	.420	-.261	290	1412	.014	.114	.449	-.405	290	1927	-.058	.107	.238	-.408
290	1222	-.053	.101	.317	-.403	290	1413	.014	.137	.501	-.494	290	1928	-.090	.129	.321	-.910
290	1223	-.082	.098	.207	-.434	290	1414	-.079	.112	.308	-.546	290	1929	-.067	.117	.443	-.659
290	1224	.092	.109	.435	-.228	290	1415	-.054	.104	.257	-.420	290	1930	-.012	.123	.472	-.464
290	1225	.050	.125	.623	-.331	290	1416	.013	.097	.328	-.256	290	1931	-.027	.124	.639	-.471
290	1226	.017	.107	.420	-.334	290	1417	.023	.101	.381	-.277	290	1932	-.004	.111	.478	-.341
290	1227	-.035	.108	.332	-.336	290	1418	.021	.125	.506	-.359	290	1933	-.089	.115	.318	-.591
290	1228	-.080	.101	.241	-.422	290	1419	.022	.109	.404	-.394	290	1934	-.145	.127	.270	-.616
290	1229	-.033	.095	.246	-.396	290	1420	.030	.132	.606	-.363	290	1935	-.162	.138	.231	-.688
290	1301	.088	.112	.589	-.258	290	1421	.044	.132	.537	-.508	290	1936	-.101	.123	.518	-.792
290	1302	.087	.123	.511	-.276	290	1422	-.028	.102	.300	-.391	290	1937	-.042	.131	.523	-.492
290	1303	.084	.127	.474	-.311	290	1423	.016	.103	.439	-.307	290	1938	.015	.149	.760	-.471

WD	TAP	CPMEAN	CPRMS	CPMAX	CPMIN	WD	TAP	CPMEAN	CPRMS	CPMAX	CPMIN	WD	TAP	CPMEAN	CPRMS	CPMAX	CPMIN
290	1939	.039	.122	.489	-.331	300	121	.116	.196	.843	-.850	300	171	.092	.128	.520	-.388
290	1940	.009	.110	.383	-.345	300	122	.231	.198	.927	-.745	300	172	.091	.128	.477	-.355
290	1941	.012	.115	.543	-.355	300	123	.277	.212	.954	-.819	300	173	.085	.124	.580	-.329
290	1942	.045	.120	.547	-.388	300	124	.349	.230	1.230	-.405	300	174	-.140	.143	.575	-.627
290	1943	.023	.128	.499	-.406	300	125	.446	.248	1.445	-.370	300	175	-.013	.122	.396	-.404
290	1944	-.000	.113	.480	-.497	300	126	.460	.271	1.382	-.386	300	176	.041	.116	.442	-.355
290	1945	.021	.108	.383	-.391	300	127	.383	.241	1.218	-.351	300	177	.092	.130	.699	-.345
290	1946	.096	.125	.687	-.335	300	128	.294	.230	1.241	-.362	300	178	.069	.116	.518	-.469
290	1947	.078	.129	.813	-.309	300	129	.162	.218	1.119	-.464	300	179	.024	.113	.528	-.325
290	1948	.037	.117	.496	-.304	300	130	.137	.182	.946	-.504	300	180	-.107	.120	.294	-.520
290	1949	.040	.132	.587	-.551	300	131	.249	.205	.968	-.491	300	181	.078	.130	.587	-.273
290	1950	.063	.116	.551	-.257	300	132	.295	.185	.933	-.425	300	182	.107	.126	.589	-.316
290	1951	-.006	.107	.317	-.381	300	133	.293	.190	1.086	-.630	300	183	.087	.113	.468	-.396
290	1952	.058	.114	.436	-.297	300	134	.245	.218	1.198	-.541	300	184	-.053	.131	.411	-.553
290	1953	.134	.122	.628	-.205	300	135	.321	.248	1.253	-.510	300	185	.105	.131	.659	-.316
290	1954	.084	.125	.667	-.277	300	136	.265	.220	1.285	-.478	300	186	.147	.141	.674	-.217
290	1955	.043	.119	.613	-.501	300	137	.210	.210	.937	-.504	300	187	.148	.126	.654	-.296
290	1956	.071	.122	.732	-.335	300	138	.184	.189	.933	-.453	300	201	-.185	.135	.278	-.685
290	1957	.083	.138	.691	-.670	300	139	.112	.173	.706	-.453	300	202	-.275	.147	.132	-1.180
290	1958	.078	.112	.539	-.294	300	140	.105	.157	.832	-.397	300	203	-.284	.173	.400	-1.020
290	1959	.040	.122	.449	-.532	300	141	.186	.166	.892	-1.127	300	204	-.197	.135	.188	-.813
290	1960	.048	.115	.647	-.374	300	142	.225	.170	.879	-.259	300	205	-.197	.134	.223	-.810
290	1961	.064	.115	.669	-.258	300	143	.226	.173	.815	-.475	300	206	-.188	.132	.245	-.710
290	1962	.119	.142	.655	-.267	300	144	.175	.201	1.095	-.659	300	207	-.211	.136	.219	-.861
290	1963	.144	.115	.545	-.200	300	145	.204	.195	1.032	-.565	300	208	-.204	.123	.205	-.721
290	1964	.143	.121	.611	-.263	300	146	.173	.195	.848	-.701	300	209	-.186	.132	.249	-.662
290	1965	.078	.117	.587	-.272	300	147	.117	.177	.789	-.480	300	210	-.166	.132	.228	-.703
290	1966	.062	.111	.633	-.323	300	148	.099	.163	.970	-.488	300	211	-.176	.140	.346	-.707
290	1967	.046	.118	.483	-.348	300	149	.058	.151	.773	-.530	300	212	-.195	.132	.308	-.683
290	1968	.053	.119	.694	-.342	300	150	.085	.161	.793	-.742	300	213	-.207	.135	.230	-.740
300	101	-.220	.206	.702	-.952	300	151	.148	.149	.673	-.353	300	214	-.217	.132	.184	-.696
300	102	-.117	.260	1.146	-1.260	300	152	.151	.143	.835	-.427	300	215	-.188	.119	.252	-.589
300	103	.051	.293	1.108	-1.283	300	153	.143	.130	.613	-.390	300	216	-.193	.120	.236	-.581
300	104	.432	.249	1.280	-.345	300	154	.115	.196	.815	-.740	300	217	-.181	.137	.251	-.629
300	105	.403	.229	1.249	-.383	300	155	.151	.187	.990	-.434	300	218	-.171	.132	.341	-.633
300	106	.294	.204	1.150	-.372	300	156	.129	.171	.865	-.519	300	219	-.167	.123	.260	-.661
300	107	.291	.226	1.212	-.522	300	157	.079	.154	.607	-.425	300	220	-.182	.125	.221	-.732
300	108	.236	.242	1.009	-.652	300	158	.079	.150	.837	-.480	300	221	-.174	.127	.228	-.627
300	109	.030	.246	.870	-.994	300	159	.036	.132	.528	-.386	300	222	-.172	.119	.216	-.563
300	110	-.164	.215	.890	-1.349	300	160	.059	.140	.570	-.469	300	223	-.191	.121	.182	-.701
300	111	-.106	.198	.568	-1.591	300	161	.103	.133	.542	-.486	300	224	-.183	.129	.236	-.611
300	112	.053	.184	.801	-.952	300	162	.107	.143	.625	-1.057	300	225	-.186	.129	.254	-.635
300	113	.088	.184	.707	-.819	300	163	.105	.130	.520	-.307	300	226	-.182	.128	.216	-.683
300	114	.479	.258	1.329	-.288	300	164	-.009	.157	.528	-.692	300	227	-.196	.150	.297	-.887
300	115	.561	.266	1.479	-.195	300	165	.019	.158	.680	-.541	300	228	-.175	.131	.225	-.670
300	116	.527	.254	1.488	-.319	300	166	-.024	.156	.598	-.563	300	229	-.182	.132	.317	-.668
300	117	.484	.272	1.724	-.281	300	167	.009	.136	.566	-.471	300	230	-.166	.130	.269	-.651
300	118	.376	.273	1.906	-.374	300	168	.075	.139	.623	-.394	300	231	-.168	.120	.252	-.546
300	119	.189	.263	1.309	-.530	300	169	.092	.144	.601	-.458	300	232	-.192	.121	.217	-.598
300	120	-.010	.200	.940	-.735	300	170	.087	.127	.487	-.429	300	233	-.185	.129	.228	-.701

WD	TAP	CPMEAN	CPRMS	CPMAX	CPMIN	WD	TAP	CPMEAN	CPRMS	CPMAX	CPMIN	WD	TAP	CPMEAN	CPRMS	CPMAX	CPMIN
300	234	-.179	.133	.276	-.799	300	312	-.209	.121	.165	-.644	300	404	-.385	.264	.387	-2.210
300	235	-.179	.143	.355	-.824	300	313	-.203	.120	.162	-.835	300	405	-.300	.236	.467	-1.237
300	236	-.179	.151	.278	-.823	300	314	-.217	.125	.153	-.956	300	406	-.102	.202	.423	-1.024
300	237	-.191	.140	.227	-.961	300	315	-.232	.125	.224	-.722	300	407	-.050	.132	.303	-.729
300	238	-.165	.122	.221	-.642	300	316	-.205	.118	.176	-.609	300	408	-.041	.137	.394	-.703
300	239	-.184	.120	.254	-.666	300	317	-.206	.130	.278	-.678	300	409	-.064	.130	.485	-.488
300	240	-.206	.134	.186	-.690	300	318	-.216	.122	.183	-.673	300	410	-.102	.123	.343	-.560
300	241	-.186	.133	.254	-.854	300	319	-.209	.116	.129	-.710	300	411	-.148	.119	.242	-.715
300	242	-.176	.133	.280	-.707	300	320	-.217	.117	.110	-.777	300	412	-.349	.221	.507	-1.202
300	243	-.191	.151	.300	-.872	300	321	-.208	.118	.186	-.612	300	413	-.350	.277	.527	-1.404
300	244	-.200	.151	.197	-.786	300	322	-.213	.129	.146	-.826	300	414	-.095	.244	.483	-1.388
300	245	-.188	.138	.210	-.756	300	323	-.227	.126	.200	-.673	300	415	-.014	.143	.426	-.800
300	246	-.193	.127	.167	-.750	300	324	-.219	.122	.221	-.692	300	416	-.025	.120	.452	-.544
300	247	-.201	.129	.272	-.717	300	325	-.198	.126	.202	-.692	300	417	-.065	.121	.376	-.437
300	248	-.219	.115	.152	-.589	300	326	-.206	.129	.278	-.923	300	418	-.129	.116	.219	-.614
300	249	-.220	.128	.157	-.655	300	327	-.214	.127	.146	-.862	300	419	-.177	.112	.136	-.633
300	250	-.211	.121	.253	-.742	300	328	-.200	.129	.375	-.786	300	420	-.337	.262	.664	-1.572
300	251	-.200	.124	.182	-.660	300	329	-.227	.126	.228	-.670	300	421	-.270	.286	.516	-1.286
300	252	-.232	.143	.182	-.796	300	330	-.222	.132	.155	-.963	300	422	-.061	.252	.565	-1.305
300	253	-.233	.148	.182	-.760	300	331	-.211	.143	.214	-.881	300	423	-.022	.176	.439	-.966
300	254	-.228	.129	.127	-.718	300	332	-.203	.135	.255	-.710	300	424	-.015	.123	.420	-.554
300	255	-.219	.126	.191	-.647	300	333	-.217	.138	.245	-.777	300	425	-.066	.121	.380	-.659
300	256	-.236	.135	.304	-.696	300	334	-.205	.084	.032	-.495	300	426	-.142	.123	.326	-.561
300	257	-.216	.127	.162	-.805	300	335	-.221	.140	.195	-.750	300	427	-.173	.116	.195	-.544
300	258	-.224	.118	.106	-.736	300	336	-.222	.143	.196	-.869	300	428	-.200	.277	.715	-1.609
300	259	-.221	.120	.184	-.739	300	337	-.219	.137	.202	-1.171	300	429	-.177	.327	.643	-1.651
300	260	-.220	.145	.254	-.917	300	338	-.230	.152	.243	-1.013	300	430	-.009	.226	.603	-1.455
300	261	-.231	.147	.152	-.831	300	339	-.211	.145	.181	-.852	300	431	.015	.136	.600	-.509
300	262	-.222	.142	.177	-.839	300	340	-.224	.137	.148	-.932	300	432	-.012	.128	.444	-.453
300	263	-.216	.140	.208	-.918	300	341	-.226	.138	.150	-.709	300	433	-.060	.123	.392	-.451
300	264	-.217	.132	.226	-.614	300	342	-.224	.155	.205	-.956	300	434	-.114	.122	.265	-.511
300	265	-.230	.122	.188	-.818	300	343	-.240	.146	.183	-1.022	300	435	-.164	.126	.249	-.654
300	266	-.209	.136	.230	-1.122	300	344	-.266	.172	.221	-1.074	300	436	-.126	.267	.806	-1.396
300	267	-.205	.133	.218	-.875	300	345	-.246	.153	.135	-1.136	300	437	-.078	.271	.657	-1.385
300	268	-.207	.124	.172	-.693	300	346	-.245	.173	.228	-1.057	300	438	.012	.184	.563	-1.378
300	269	-.211	.124	.154	-.740	300	347	-.245	.136	.113	-.867	300	439	.013	.128	.415	-.582
300	270	-.208	.126	.261	-.686	300	348	-.244	.162	.389	-1.066	300	440	-.015	.115	.521	-.436
300	271	-.218	.124	.172	-.684	300	349	-.245	.147	.141	-.844	300	441	-.065	.120	.324	-.474
300	272	-.206	.123	.134	-.727	300	350	-.224	.145	.164	-.795	300	442	-.116	.123	.350	-.535
300	301	-.216	.128	.203	-.657	300	351	-.231	.152	.166	-.980	300	443	-.170	.126	.237	-.608
300	302	-.204	.134	.221	-.998	300	352	-.209	.137	.211	-.823	300	444	-.088	.195	.599	-1.122
300	303	-.203	.125	.142	-.615	300	353	-.220	.143	.223	-1.005	300	445	-.045	.191	.455	-.833
300	304	-.200	.124	.252	-.722	300	354	-.217	.144	.200	-.840	300	446	.017	.129	.412	-.581
300	305	-.215	.125	.209	-.720	300	355	-.224	.133	.208	-.855	300	447	.010	.117	.426	-.416
300	306	-.209	.128	.191	-.780	300	356	-.233	.140	.198	-.893	300	448	-.026	.104	.374	-.404
300	307	-.218	.121	.155	-.633	300	357	-.209	.128	.170	-.772	300	449	-.068	.108	.327	-.414
300	308	-.204	.123	.226	-.671	300	358	-.217	.128	.200	-.874	300	450	-.129	.115	.271	-.538
300	309	-.199	.123	.181	-.671	300	401	.068	.242	.959	-.998	300	451	-.159	.117	.193	-.640
300	310	-.214	.115	.202	-.658	300	402	-.062	.134	.406	-.528	300	452	-.054	.152	.370	-.881
300	311	-.211	.120	.120	-.786	300	403	-.101	.138	.596	-.642	300	453	-.005	.118	.468	-.406

WD	TAP	CPMEAN	CPRMS	CPMAX	CPMIN	WD	TAP	CPMEAN	CPRMS	CPMAX	CPMIN	WD	TAP	CPMEAN	CPRMS	CPMAX	CPMIN
300	454	.004	.117	.468	-.447	300	532	.008	.130	.705	-.440	300	814	.029	.114	.382	-.530
300	455	-.024	.115	.391	-.418	300	533	.162	.140	.827	-.266	300	815	-.007	.111	.336	-.427
300	456	-.034	.113	.384	-.414	300	534	.082	.129	.603	-.366	300	901	-.167	.130	.303	-.650
300	457	-.064	.101	.275	-.459	300	601	-.128	.126	.365	-.701	300	902	-.182	.146	.292	-.724
300	458	-.137	.108	.225	-.560	300	602	-.070	.149	.378	-.757	300	903	-.137	.132	.252	-.954
300	459	-.181	.115	.218	-.577	300	603	-.252	.305	.594	-1.363	300	904	-.081	.158	.367	-1.124
300	460	-.148	.152	.342	-.650	300	604	-.471	.403	.713	-2.247	300	905	-.035	.130	.405	-.509
300	461	-.058	.123	.368	-.470	300	605	-.141	.145	.373	-.876	300	906	-.201	.144	.244	-.791
300	462	-.026	.102	.300	-.384	300	606	-.145	.215	.492	-1.092	300	907	-.260	.188	.275	-1.097
300	463	-.060	.117	.325	-.448	300	607	-.438	.354	.588	-1.499	300	908	-.161	.138	.250	-.983
300	464	-.134	.116	.242	-.645	300	608	-.511	.302	.990	-1.479	300	909	-.216	.161	.332	-.991
300	465	-.192	.129	.244	-.737	300	609	-.204	.185	.298	-1.273	300	910	-.299	.176	.197	-1.110
300	466	-.080	.125	.325	-.547	300	610	-.229	.215	.322	-1.322	300	911	-.194	.192	.343	-1.254
300	467	-.048	.113	.325	-.461	300	611	-.455	.278	.420	-1.586	300	912	-.079	.154	.424	-.874
300	468	-.019	.122	.414	-.438	300	612	-.481	.249	.392	-1.924	300	913	-.281	.163	.186	-1.239
300	469	-.005	.115	.419	-.483	300	613	-.204	.161	.232	-1.256	300	914	-.320	.250	.511	-1.596
300	470	-.036	.115	.343	-.480	300	614	-.215	.177	.232	-1.110	300	915	-.210	.198	.473	-1.089
300	471	-.031	.111	.350	-.385	300	615	-.443	.264	.354	-1.596	300	916	-.227	.157	.385	-.947
300	472	-.058	.173	.531	-.925	300	616	-.491	.260	.245	-1.680	300	917	-.309	.173	.184	-1.091
300	501	.325	.213	1.073	-.366	300	617	-.220	.155	.400	-.986	300	918	-.271	.180	.347	-.967
300	502	.384	.217	1.044	-.374	300	618	-.237	.171	.299	-1.287	300	919	-.069	.239	.711	-.965
300	503	.477	.243	1.335	-.356	300	619	-.404	.216	.192	-1.475	300	920	-.256	.164	.263	-.981
300	504	.428	.247	1.186	-.416	300	620	-.474	.238	.308	-1.815	300	921	-.379	.206	.083	-1.342
300	505	.408	.217	1.240	-.324	300	621	-.224	.142	.195	-.795	300	1101	.021	.118	.484	-.460
300	506	.481	.229	1.216	-.255	300	622	-.262	.163	.303	-.971	300	1102	.013	.114	.388	-.363
300	507	.516	.237	1.204	-.327	300	623	-.364	.187	.563	-1.077	300	1103	.011	.112	.388	-.398
300	508	.470	.252	1.348	-.249	300	624	-.395	.201	.324	-1.365	300	1104	-.148	.108	.222	-.482
300	509	.358	.211	1.181	-.310	300	625	-.207	.128	.149	-.725	300	1105	-.134	.106	.165	-.623
300	510	.426	.214	1.118	-.211	300	626	-.221	.126	.210	-.693	300	1106	-.224	.127	.160	-.683
300	511	.411	.242	1.256	-.395	300	627	-.289	.156	.225	-.938	300	1107	-.085	.111	.265	-.534
300	512	.346	.231	1.273	-.350	300	628	-.326	.187	.268	-1.431	300	1108	-.078	.111	.324	-.463
300	513	.269	.171	.950	-.237	300	629	-.224	.129	.219	-.782	300	1109	-.110	.116	.253	-.532
300	514	.313	.183	1.025	-.235	300	630	-.270	.134	.153	-1.017	300	1110	-.043	.112	.404	-.445
300	515	.364	.209	1.065	-.216	300	631	-.233	.132	.149	-.691	300	1111	-.055	.114	.535	-.455
300	516	.303	.216	1.136	-.419	300	632	-.301	.158	.133	-1.029	300	1112	-.186	.124	.199	-.795
300	517	.202	.138	.796	-.322	300	633	-.108	.143	.405	-.724	300	1113	-.079	.115	.349	-.600
300	518	.228	.139	.731	-.232	300	634	-.239	.180	.397	-.905	300	1114	-.089	.101	.276	-.450
300	519	.291	.176	1.061	-.187	300	801	-.217	.140	.217	-.805	300	1115	-.036	.100	.312	-.421
300	520	.234	.165	.874	-.333	300	802	-.227	.151	.209	-.950	300	1116	-.022	.096	.306	-.337
300	521	.143	.123	.624	-.272	300	803	.089	.118	.484	-.319	300	1117	-.082	.109	.322	-.427
300	522	.185	.137	.693	-.227	300	804	-.211	.124	.174	-.623	300	1118	-.107	.110	.239	-.496
300	523	.220	.148	.806	-.278	300	805	-.176	.150	.327	-.922	300	1119	-.116	.109	.303	-.614
300	524	.200	.159	.923	-.413	300	806	-.253	.138	.131	-.745	300	1120	-.223	.140	.138	-.897
300	525	.084	.126	.487	-.356	300	807	-.221	.135	.186	-.798	300	1121	-.076	.115	.348	-.398
300	526	.091	.120	.456	-.276	300	808	-.262	.131	.194	-.726	300	1122	-.076	.110	.252	-.408
300	527	.099	.125	.490	-.313	300	809	-.279	.140	.197	-1.027	300	1123	-.063	.103	.252	-.424
300	528	.069	.130	.487	-.367	300	810	.064	.122	.543	-.335	300	1124	-.144	.114	.234	-.549
300	529	.029	.118	.553	-.420	300	811	.043	.116	.388	-.322	300	1125	-.011	.102	.441	-.326
300	530	.023	.122	.537	-.392	300	812	.050	.118	.617	-.340	300	1126	.006	.108	.382	-.453
300	531	.052	.131	.485	-.415	300	813	.006	.116	.367	-.457	300	1201	.016	.127	.529	-.546

WD	TAP	CPMEAN	CPRMS	CPMAX	CPMIN	WD	TAP	CPMEAN	CPRMS	CPMAX	CPMIN	WD	TAP	CPMEAN	CPRMS	CPMAX	CPMIN
300	1202	.001	.129	.472	-.484	300	1324	.139	.115	.582	-.200	300	1908	-.024	.144	.433	-.573
300	1203	.027	.122	.498	-.342	300	1325	.140	.114	.506	-.210	300	1909	-.009	.145	.733	-.567
300	1204	.007	.108	.368	-.427	300	1326	.141	.118	.618	-.226	300	1910	-.018	.143	.712	-.436
300	1205	.035	.137	.418	-.520	300	1327	.129	.112	.618	-.187	300	1911	-.007	.126	.435	-.456
300	1206	.037	.138	.604	-.555	300	1328	.103	.111	.456	-.255	300	1912	-.087	.132	.473	-.517
300	1207	.003	.119	.498	-.440	300	1329	.100	.132	.757	-.281	300	1913	-.079	.131	.358	-.593
300	1208	.023	.133	.651	-.420	300	1330	.106	.148	.734	-.512	300	1914	-.069	.101	.218	-.424
300	1209	.050	.120	.467	-.396	300	1331	.135	.141	.633	-.280	300	1915	-.089	.118	.340	-.492
300	1210	-.027	.124	.539	-.450	300	1401	.098	.122	.670	-.279	300	1916	.032	.148	.649	-.542
300	1211	.041	.126	.504	-.432	300	1402	-.021	.113	.336	-.428	300	1917	.031	.182	.532	-.966
300	1212	-.089	.113	.367	-.503	300	1403	.094	.127	.550	-.332	300	1918	.033	.160	.773	-.535
300	1213	-.179	.122	.195	-.634	300	1404	.130	.124	.619	-.272	300	1919	.014	.154	.809	-.408
300	1214	.066	.137	.770	-.346	300	1405	.032	.110	.404	-.356	300	1920	.013	.142	.898	-.460
300	1215	.076	.118	.641	-.338	300	1406	.084	.118	.595	-.420	300	1921	-.048	.133	.455	-.695
300	1216	.107	.120	.712	-.232	300	1407	.115	.121	.564	-.280	300	1922	-.067	.122	.439	-.526
300	1217	-.042	.111	.383	-.483	300	1408	-.006	.124	.415	-.506	300	1923	-.064	.118	.255	-.445
300	1218	-.028	.110	.416	-.363	300	1409	-.138	.116	.311	-.644	300	1924	.009	.132	.642	-.535
300	1219	-.095	.105	.260	-.450	300	1410	-.088	.107	.261	-.610	300	1925	-.022	.137	.722	-.452
300	1220	.013	.104	.428	-.322	300	1411	-.004	.100	.399	-.376	300	1926	-.063	.123	.552	-.501
300	1221	.090	.123	.584	-.295	300	1412	.032	.116	.487	-.313	300	1927	-.056	.118	.360	-.544
300	1222	-.041	.102	.383	-.418	300	1413	.001	.131	.448	-.545	300	1928	-.104	.154	.326	-.673
300	1223	-.073	.097	.268	-.406	300	1414	-.092	.104	.204	-.517	300	1929	-.066	.148	.411	-.686
300	1224	.137	.114	.539	-.248	300	1415	-.070	.112	.253	-.661	300	1930	.003	.149	.583	-.530
300	1225	.096	.129	.715	-.303	300	1416	.030	.104	.374	-.302	300	1931	-.004	.155	.688	-.490
300	1226	.061	.122	.693	-.280	300	1417	.049	.100	.492	-.230	300	1932	.014	.131	.563	-.342
300	1227	-.021	.114	.356	-.355	300	1418	.045	.131	.551	-.377	300	1933	-.078	.134	.342	-.716
300	1228	-.066	.102	.268	-.454	300	1419	.021	.115	.408	-.450	300	1934	-.177	.167	.388	-.874
300	1229	-.015	.093	.379	-.339	300	1420	.055	.144	.622	-.445	300	1935	-.176	.175	.540	-.823
300	1301	.145	.127	.542	-.288	300	1421	.070	.137	.647	-.419	300	1936	-.118	.181	.520	-.912
300	1302	.146	.133	.810	-.262	300	1422	.003	.108	.340	-.338	300	1937	-.014	.166	.775	-.678
300	1303	.133	.135	.791	-.261	300	1423	.033	.097	.374	-.361	300	1938	.069	.173	.950	-.427
300	1304	.046	.116	.387	-.344	300	1424	.058	.106	.420	-.295	300	1939	.075	.143	.717	-.439
300	1305	.131	.122	.582	-.242	300	1425	.072	.107	.567	-.339	300	1940	.054	.119	.616	-.385
300	1306	.198	.127	.642	-.221	300	1426	.056	.111	.597	-.342	300	1941	.050	.129	.616	-.391
300	1307	.190	.139	.735	-.250	300	1427	.017	.103	.360	-.317	300	1942	.095	.155	.807	-.425
300	1308	.056	.123	.546	-.384	300	1428	.026	.101	.426	-.295	300	1943	.075	.152	.965	-.409
300	1309	.066	.106	.395	-.255	300	1429	.045	.100	.382	-.251	300	1944	.052	.125	.827	-.302
300	1311	.197	.123	.623	-.224	300	1430	.074	.106	.461	-.364	300	1945	.059	.125	.514	-.324
300	1312	.205	.126	.720	-.159	300	1431	.099	.115	.644	-.226	300	1946	.171	.149	.969	-.373
300	1313	.216	.143	.751	-.224	300	1432	.045	.104	.406	-.274	300	1947	.179	.146	.806	-.230
300	1314	.092	.109	.428	-.328	300	1433	.065	.106	.485	-.278	300	1948	.111	.146	.831	-.293
300	1315	.106	.126	.564	-.286	300	1434	.055	.114	.535	-.385	300	1949	.052	.154	1.025	-.398
300	1316	.096	.118	.616	-.286	300	1435	.058	.136	.573	-.387	300	1950	.094	.136	.791	-.265
300	1317	.129	.115	.616	-.221	300	1901	-.005	.106	.419	-.336	300	1951	.004	.114	.340	-.416
300	1318	.144	.123	.582	-.241	300	1902	.112	.094	.462	-.183	300	1952	.123	.140	.609	-.461
300	1319	.088	.118	.464	-.319	300	1903	.234	.093	.554	-.061	300	1953	.225	.167	.962	-.328
300	1320	.086	.121	.593	-.341	300	1904	.056	.117	.469	-.325	300	1954	.153	.154	.935	-.252
300	1321	.098	.108	.509	-.311	300	1905	.090	.122	.620	-.307	300	1955	.097	.148	.735	-.579
300	1322	.098	.120	.538	-.455	300	1906	.045	.118	.631	-.336	300	1956	.114	.149	.764	-.331
300	1323	.074	.121	.561	-.341	300	1907	-.032	.128	.571	-.435	300	1957	.173	.152	.811	-.382

WD	TAP	CPMEAN	CPRMS	CPMAX	CPMIN	WD	TAP	CPMEAN	CPRMS	CPMAX	CPMIN	WD	TAP	CPMEAN	CPRMS	CPMAX	CPMIN
300	1958	.143	.154	.950	-.321	310	140	.189	.177	1.006	-.528	310	203	-.216	.140	.178	-.773
300	1959	.106	.162	1.096	-.416	310	141	.174	.158	.719	-.349	310	204	-.183	.136	.263	-.728
300	1960	.117	.176	.948	-.373	310	142	.206	.187	.960	-.312	310	205	-.168	.123	.194	-.664
300	1961	.120	.142	.874	-.322	310	143	.184	.170	.878	-.265	310	206	-.192	.139	.199	-.697
300	1962	.230	.139	.850	-.140	310	144	.150	.181	.874	-.685	310	207	-.188	.138	.292	-.841
300	1963	.212	.139	.675	-.288	310	145	.186	.172	.906	-.402	310	208	-.184	.127	.228	-.690
300	1964	.244	.145	.840	-.198	310	146	.197	.166	.906	-.325	310	209	-.169	.132	.307	-.844
300	1965	.148	.136	.681	-.355	310	147	.194	.159	.871	-.352	310	210	-.159	.130	.263	-.628
300	1966	.129	.161	.865	-.360	310	148	.176	.149	.756	-.279	310	211	-.158	.128	.228	-.624
300	1967	.115	.154	.811	-.458	310	149	.165	.159	.763	-.321	310	212	-.182	.126	.223	-.713
300	1968	.117	.138	.713	-.274	310	150	.152	.163	.831	-.385	310	213	-.170	.129	.327	-.652
310	101	-.262	.166	.310	-1.358	310	151	.168	.159	.960	-.372	310	214	-.180	.111	.157	-.558
310	102	-.242	.207	.828	-1.005	310	152	.178	.165	.851	-.458	310	215	-.158	.124	.296	-.557
310	103	-.197	.232	.877	-1.179	310	153	.149	.151	.753	-.396	310	216	-.167	.122	.258	-.626
310	104	.283	.250	1.031	-.724	310	154	.120	.166	.873	-.495	310	217	-.158	.120	.279	-.524
310	105	.235	.218	.980	-.485	310	155	.158	.167	.801	-.575	310	218	-.155	.118	.207	-.602
310	106	.136	.202	1.040	-.684	310	156	.160	.150	.737	-.316	310	219	-.156	.129	.245	-.657
310	107	.133	.205	.931	-.561	310	157	.156	.147	.803	-.259	310	220	-.169	.123	.205	-.624
310	108	.171	.219	1.069	-.530	310	158	.149	.153	.787	-.288	310	221	-.166	.115	.199	-.697
310	109	.073	.212	.960	-.552	310	159	.126	.162	.856	-.365	310	222	-.154	.118	.223	-.639
310	110	-.020	.219	.928	-.969	310	160	.136	.155	.756	-.319	310	223	-.155	.114	.247	-.550
310	111	-.042	.193	.754	-.845	310	161	.154	.155	.688	-.330	310	224	-.159	.127	.210	-.639
310	112	.017	.188	.598	-.873	310	162	.144	.157	.723	-.497	310	225	-.153	.118	.288	-.537
310	113	.021	.193	.658	-.894	310	163	.117	.139	.746	-.484	310	226	-.149	.128	.299	-.619
310	114	.391	.267	1.442	-.916	310	164	.027	.159	.801	-.563	310	227	-.149	.127	.259	-.664
310	115	.408	.262	1.259	-.322	310	165	.056	.150	.582	-.488	310	228	-.164	.126	.263	-.737
310	116	.431	.260	1.181	-.347	310	166	.025	.148	.597	-.455	310	229	-.172	.128	.214	-.648
310	117	.364	.256	1.236	-.353	310	167	.066	.139	.529	-.405	310	230	-.156	.120	.250	-.593
310	118	.397	.275	1.321	-.270	310	168	.127	.149	.704	-.305	310	231	-.167	.114	.239	-.615
310	119	.326	.271	1.188	-.384	310	169	.149	.137	.818	-.266	310	232	-.169	.115	.281	-.524
310	120	.193	.260	1.324	-.661	310	170	.144	.125	.575	-.239	310	233	-.157	.129	.248	-.764
310	121	.183	.217	.830	-.668	310	171	.119	.120	.598	-.268	310	234	-.152	.124	.343	-.572
310	122	.196	.207	.993	-.813	310	172	.083	.113	.518	-.300	310	235	-.148	.127	.281	-.688
310	123	.209	.201	.960	-.887	310	173	.083	.118	.528	-.287	310	236	-.182	.138	.359	-.826
310	124	.301	.214	1.172	-.335	310	174	-.117	.128	.489	-.556	310	237	-.157	.132	.216	-.688
310	125	.344	.234	1.192	-.280	310	175	.013	.114	.384	-.351	310	238	-.158	.124	.270	-.542
310	126	.357	.240	1.386	-.283	310	176	.084	.123	.579	-.319	310	239	-.166	.122	.188	-.617
310	127	.350	.232	1.116	-.275	310	177	.096	.117	.448	-.332	310	240	-.175	.129	.294	-.606
310	128	.340	.226	1.119	-.250	310	178	.026	.138	.487	-.791	310	241	-.155	.125	.225	-.582
310	129	.296	.250	1.350	-.361	310	179	-.004	.129	.394	-.535	310	242	-.161	.129	.365	-.655
310	130	.210	.216	1.081	-.486	310	180	-.053	.122	.379	-.525	310	243	-.157	.125	.243	-.657
310	131	.253	.208	1.050	-.599	310	181	.123	.130	.648	-.279	310	244	-.199	.145	.254	-.735
310	132	.239	.198	.940	-.473	310	182	.136	.126	.590	-.284	310	245	-.182	.139	.298	-.861
310	133	.267	.208	1.066	-.349	310	183	.071	.123	.444	-.525	310	246	-.181	.124	.211	-.609
310	134	.216	.191	1.193	-.531	310	184	.015	.124	.533	-.455	310	247	-.180	.120	.282	-.571
310	135	.266	.202	1.136	-.312	310	185	.195	.180	1.051	-.281	310	248	-.208	.119	.133	-.643
310	136	.272	.208	1.236	-.270	310	186	.180	.154	.786	-.346	310	249	-.179	.109	.206	-.584
310	137	.243	.184	.891	-.345	310	187	.129	.117	.538	-.210	310	250	-.179	.126	.325	-.727
310	138	.249	.191	.906	-.347	310	201	-.189	.139	.290	-.908	310	251	-.178	.117	.157	-.921
310	139	.220	.190	.909	-.290	310	202	-.267	.160	.183	-1.006	310	252	-.216	.142	.279	-.807

WD	TAP	CPMEAN	CPRMS	CPMAX	CPMIN	WD	TAP	CPMEAN	CPRMS	CPMAX	CPMIN	WD	TAP	CPMEAN	CPRMS	CPMAX	CPMIN
310	253	-.207	.136	.228	-.770	310	331	-.197	.133	.223	-.792	310	423	-.202	.213	.304	-1.174
310	254	-.203	.147	.237	-.797	310	332	-.199	.132	.263	-.985	310	424	-.146	.152	.385	-.884
310	255	-.195	.131	.233	-.799	310	333	-.219	.141	.170	-.860	310	425	-.119	.130	.313	-.784
310	256	-.186	.126	.200	-.654	310	334	-.200	.082	-.026	-.606	310	426	-.165	.125	.229	-.669
310	257	-.194	.134	.204	-.661	310	335	-.199	.128	.193	-.633	310	427	-.181	.133	.222	-.716
310	258	-.193	.129	.205	-.739	310	336	-.205	.139	.212	-.942	310	428	-.357	.270	.548	-1.747
310	259	-.206	.135	.228	-1.278	310	337	-.215	.142	.184	-1.023	310	429	-.385	.282	.492	-1.764
310	260	-.224	.142	.343	-.778	310	338	-.206	.141	.238	-.853	310	430	-.247	.258	.350	-1.856
310	261	-.219	.138	.211	-.716	310	339	-.221	.144	.162	-.746	310	431	-.145	.201	.427	-1.223
310	262	-.198	.128	.241	-.675	310	340	-.203	.138	.179	-.945	310	432	-.105	.155	.416	-.954
310	263	-.164	.117	.188	-.588	310	341	-.216	.142	.165	-.875	310	433	-.115	.129	.502	-.909
310	264	-.191	.121	.147	-.642	310	342	-.246	.156	.195	-1.208	310	434	-.147	.131	.267	-.706
310	265	-.177	.119	.192	-.570	310	343	-.236	.162	.245	-.894	310	435	-.161	.130	.210	-.734
310	266	-.190	.133	.343	-.890	310	344	-.225	.142	.161	-.817	310	436	-.263	.256	.483	-1.463
310	267	-.182	.120	.243	-.707	310	345	-.238	.144	.159	-.863	310	437	-.250	.280	.595	-1.926
310	268	-.155	.113	.295	-.469	310	346	-.222	.145	.183	-.886	310	438	-.105	.220	.518	-1.323
310	269	-.179	.119	.221	-.678	310	347	-.228	.162	.217	-.818	310	439	-.068	.173	.476	-1.142
310	270	-.174	.106	.210	-.556	310	348	-.232	.147	.250	-.848	310	440	-.049	.125	.350	-.825
310	271	-.176	.113	.157	-.680	310	349	-.233	.157	.185	-.804	310	441	-.089	.120	.309	-.564
310	272	-.181	.127	.199	-.724	310	350	-.193	.125	.162	-.771	310	442	-.141	.123	.229	-.742
310	301	-.199	.149	.297	-.923	310	351	-.205	.132	.186	-.718	310	443	-.176	.128	.173	-1.039
310	302	-.198	.143	.331	-.823	310	352	-.215	.150	.218	-.794	310	444	-.145	.247	.671	-1.285
310	303	-.189	.142	.259	-.742	310	353	-.220	.148	.200	-.903	310	445	-.121	.257	.592	-1.634
310	304	-.200	.137	.201	-.672	310	354	-.211	.138	.274	-1.010	310	446	-.069	.220	.561	-1.671
310	305	-.205	.133	.255	-.746	310	355	-.203	.127	.145	-.629	310	447	-.039	.141	.333	-.892
310	306	-.220	.137	.136	-.784	310	356	-.206	.137	.201	-.821	310	448	-.044	.112	.363	-.439
310	307	-.211	.134	.238	-.720	310	357	-.198	.133	.209	-.842	310	449	-.075	.108	.316	-.511
310	308	-.216	.138	.164	-1.175	310	358	-.199	.123	.201	-.705	310	450	-.134	.130	.319	-.663
310	309	-.211	.141	.190	-1.166	310	401	-.118	.210	.627	-.856	310	451	-.159	.124	.269	-.703
310	310	-.214	.126	.244	-.748	310	402	-.118	.154	.352	-.998	310	452	-.204	.304	.395	-2.645
310	311	-.201	.120	.218	-.624	310	403	-.156	.132	.490	-.674	310	453	-.067	.169	.361	-1.233
310	312	-.211	.132	.233	-.858	310	404	-.458	.273	.238	-2.099	310	454	-.041	.155	.410	-.722
310	313	-.203	.123	.188	-.799	310	405	-.387	.213	.252	-1.245	310	455	-.074	.135	.314	-.675
310	314	-.225	.129	.219	-.877	310	406	-.339	.262	.313	-1.650	310	456	-.068	.130	.391	-.603
310	315	-.205	.126	.157	-.825	310	407	-.222	.195	.243	-1.186	310	457	-.091	.119	.277	-.511
310	316	-.190	.133	.193	-1.104	310	408	-.154	.158	.304	-.791	310	458	-.143	.119	.249	-.719
310	317	-.207	.121	.193	-.696	310	409	-.162	.141	.252	-.711	310	459	-.187	.133	.216	-.663
310	318	-.207	.133	.214	-.760	310	410	-.160	.139	.348	-.686	310	460	-.167	.139	.366	-.750
310	319	-.212	.134	.148	-.896	310	411	-.191	.139	.220	-.849	310	461	-.112	.143	.386	-.595
310	320	-.201	.129	.177	-.940	310	412	-.427	.229	.166	-1.442	310	462	-.060	.127	.354	-.516
310	321	-.200	.125	.219	-.694	310	413	-.452	.242	.438	-1.624	310	463	-.083	.111	.257	-.471
310	322	-.199	.125	.238	-.699	310	414	-.348	.226	.298	-1.150	310	464	-.140	.120	.249	-.529
310	323	-.210	.130	.263	-.968	310	415	-.193	.176	.246	-1.000	310	465	-.168	.130	.214	-.641
310	324	-.210	.124	.115	-.802	310	416	-.130	.135	.339	-.783	310	466	-.135	.139	.470	-.631
310	325	-.202	.132	.209	-.699	310	417	-.128	.131	.311	-.766	310	467	-.113	.135	.295	-.578
310	326	-.211	.132	.216	-.893	310	418	-.161	.129	.283	-.647	310	468	-.071	.134	.401	-.481
310	327	-.207	.135	.258	-.851	310	419	-.179	.132	.225	-.743	310	469	-.054	.137	.470	-.568
310	328	-.184	.124	.287	-.680	310	420	-.391	.223	.385	-2.017	310	470	-.064	.113	.350	-.542
310	329	-.208	.126	.141	-.696	310	421	-.403	.234	.390	-1.799	310	471	-.087	.132	.326	-.532
310	330	-.203	.134	.221	-1.088	310	422	-.318	.243	.294	-1.663	310	472	-.104	.182	.415	-1.324

WD	TAP	CPMEAN	CPRMS	CPMAX	CPMIN	WD	TAP	CPMEAN	CPRMS	CPMAX	CPMIN	WD	TAP	CPMEAN	CPRMS	CPMAX	CPMIN
310	501	.269	.239	1.130	-.630	310	617	-.128	.125	.232	-.867	310	918	-.269	.180	.315	-1.325
310	502	.303	.247	1.127	-.583	310	618	-.134	.163	.361	-.912	310	919	-.183	.235	.656	-1.354
310	503	.304	.253	1.174	-.404	310	619	-.246	.227	.443	-1.348	310	920	-.316	.191	.281	-1.117
310	504	.218	.254	.997	-.561	310	620	-.250	.206	.588	-1.141	310	921	-.472	.259	.263	-1.579
310	505	.360	.250	1.256	-.804	310	621	-.155	.137	.319	-.710	310	1101	.027	.111	.418	-.348
310	506	.382	.256	1.184	-.600	310	622	-.150	.152	.373	-1.051	310	1102	.028	.124	.494	-.453
310	507	.302	.262	1.099	-.455	310	623	-.232	.208	.388	-1.126	310	1103	.046	.115	.431	-.306
310	508	.213	.248	1.094	-.514	310	624	-.266	.210	.707	-1.182	310	1104	-.097	.106	.252	-.489
310	509	.241	.215	1.067	-.420	310	625	-.159	.127	.269	-.663	310	1105	-.085	.106	.280	-.478
310	510	.281	.238	1.111	-.429	310	626	-.163	.131	.338	-.562	310	1106	-.142	.135	.280	-.726
310	511	.197	.212	.968	-.425	310	627	-.217	.136	.250	-.948	310	1107	-.051	.127	.368	-.600
310	512	.070	.198	.976	-.539	310	628	-.234	.146	.401	-.867	310	1108	-.021	.119	.338	-.492
310	513	.180	.190	.952	-.698	310	629	-.186	.124	.181	-.684	310	1109	-.017	.133	.516	-.447
310	514	.184	.178	.870	-.523	310	630	-.225	.117	.219	-.698	310	1110	.013	.109	.369	-.392
310	515	.137	.168	.830	-.409	310	631	-.203	.115	.146	-.611	310	1111	.006	.122	.435	-.409
310	516	.057	.182	.706	-.589	310	632	-.282	.135	.123	-.792	310	1112	-.111	.116	.220	-.512
310	517	.142	.145	.879	-.453	310	633	-.031	.133	.484	-.531	310	1113	-.022	.123	.528	-.455
310	518	.169	.167	1.011	-.500	310	634	-.207	.166	.468	-.803	310	1114	-.030	.110	.322	-.390
310	519	.162	.161	.730	-.324	310	801	-.203	.150	.204	-1.199	310	1115	.001	.114	.524	-.474
310	520	.078	.182	.753	-.436	310	802	-.208	.134	.204	-.659	310	1116	.015	.114	.442	-.352
310	521	.148	.133	.753	-.479	310	803	.118	.119	.484	-.239	310	1117	-.025	.104	.427	-.398
310	522	.162	.140	.618	-.324	310	804	-.187	.113	.284	-.587	310	1118	-.059	.128	.389	-.504
310	523	.171	.149	.766	-.300	310	805	-.133	.121	.330	-.583	310	1119	-.057	.113	.290	-.506
310	524	.126	.177	.750	-.493	310	806	-.226	.119	.153	-.633	310	1120	-.138	.118	.253	-.663
310	525	.063	.135	.524	-.572	310	807	-.187	.117	.250	-.762	310	1121	-.027	.120	.390	-.401
310	526	.065	.130	.584	-.565	310	808	-.219	.119	.146	-.634	310	1122	-.033	.116	.358	-.452
310	527	.069	.124	.476	-.385	310	809	-.237	.128	.182	-.723	310	1123	-.015	.108	.330	-.347
310	528	.058	.132	.534	-.450	310	810	.011	.147	.479	-.564	310	1124	-.094	.115	.264	-.522
310	529	-.008	.136	.445	-.578	310	811	-.020	.131	.427	-.492	310	1125	.016	.109	.470	-.326
310	530	-.017	.134	.541	-.483	310	812	-.003	.133	.392	-.688	310	1126	.029	.103	.381	-.414
310	531	-.045	.182	.435	-.873	310	813	-.021	.129	.309	-.669	310	1201	.038	.101	.349	-.324
310	532	-.042	.134	.351	-.608	310	814	-.014	.136	.432	-.582	310	1202	.009	.134	.489	-.469
310	533	.085	.120	.519	-.277	310	815	-.067	.134	.399	-.803	310	1203	.035	.128	.525	-.374
310	534	-.002	.146	.826	-.473	310	901	-.180	.137	.279	-.813	310	1204	.036	.123	.580	-.364
310	601	-.072	.126	.414	-.644	310	902	-.161	.151	.265	-1.220	310	1205	.040	.141	.515	-.535
310	602	-.012	.140	.607	-.631	310	903	-.156	.142	.294	-.760	310	1206	.041	.140	.539	-.524
310	603	-.016	.242	.610	-1.387	310	904	-.127	.174	.473	-1.001	310	1207	.044	.109	.458	-.337
310	604	-.156	.353	.714	-2.452	310	905	-.095	.141	.303	-.692	310	1208	.093	.146	.693	-.317
310	605	-.079	.126	.348	-.619	310	906	-.224	.166	.303	-.876	310	1209	.121	.137	.600	-.279
310	606	-.023	.160	.457	-.989	310	907	-.204	.177	.299	-.990	310	1210	.039	.134	.514	-.408
310	607	-.123	.333	.771	-1.971	310	908	-.222	.161	.286	-.840	310	1211	.085	.142	.646	-.336
310	608	-.187	.323	.850	-1.489	310	909	-.240	.160	.315	-.912	310	1212	-.034	.137	.518	-.473
310	609	-.121	.142	.476	-1.085	310	910	-.268	.167	.317	-1.193	310	1213	-.144	.113	.184	-.601
310	610	-.087	.185	.570	-1.182	310	911	-.245	.184	.339	-1.309	310	1214	.067	.120	.433	-.369
310	611	-.207	.287	.696	-1.628	310	912	-.119	.161	.415	-.873	310	1215	.134	.142	.727	-.386
310	612	-.255	.264	.696	-1.568	310	913	-.246	.152	.163	-.965	310	1216	.180	.158	.861	-.298
310	613	-.126	.135	.238	-1.241	310	914	-.263	.156	.248	-.864	310	1217	.019	.136	.585	-.394
310	614	-.106	.165	.432	-.864	310	915	-.334	.207	.248	-1.579	310	1218	.025	.121	.487	-.380
310	615	-.237	.253	.553	-1.299	310	916	-.193	.167	.459	-.970	310	1219	-.052	.112	.320	-.449
310	616	-.254	.259	.568	-1.387	310	917	-.331	.205	.232	-1.383	310	1220	.060	.130	.630	-.336

WD	TAP	CPMEAN	CPRMS	CPMAX	CPMIN
310	1221	.145	.145	.820	-.365
310	1222	.021	.115	.541	-.379
310	1223	-.041	.121	.351	-.477
310	1224	.155	.119	.682	-.201
310	1225	.211	.196	.965	-.280
310	1226	.146	.166	.822	-.304
310	1227	.055	.127	.525	-.368
310	1228	-.040	.118	.306	-.427
310	1229	.015	.111	.425	-.525
310	1301	.104	.119	.718	-.271
310	1302	.117	.120	.553	-.357
310	1303	.118	.121	.614	-.339
310	1304	.056	.112	.475	-.407
310	1305	.138	.114	.593	-.249
310	1306	.170	.127	.649	-.179
310	1307	.136	.108	.540	-.367
310	1308	.050	.124	.454	-.521
310	1309	.068	.103	.417	-.332
310	1311	.158	.109	.556	-.259
310	1312	.181	.127	.722	-.178
310	1313	.164	.138	.827	-.329
310	1314	.092	.095	.460	-.229
310	1315	.140	.119	.751	-.288
310	1316	.145	.135	.711	-.265
310	1317	.107	.103	.540	-.184
310	1318	.147	.110	.584	-.216
310	1319	.118	.111	.592	-.219
310	1320	.102	.101	.439	-.366
310	1321	.102	.105	.502	-.245
310	1322	.105	.109	.529	-.195
310	1323	.128	.122	.579	-.261
310	1324	.132	.105	.564	-.246
310	1325	.117	.118	.472	-.329
310	1326	.120	.098	.477	-.296
310	1327	.116	.108	.582	-.304
310	1328	.115	.104	.445	-.307
310	1329	.175	.161	1.049	-.208
310	1330	.083	.139	.528	-.445
310	1331	.110	.125	.522	-.375
310	1401	.088	.118	.502	-.273
310	1402	.008	.144	.583	-.420
310	1403	.090	.128	.516	-.296
310	1404	.121	.131	.674	-.288
310	1405	.055	.102	.364	-.375
310	1406	.088	.134	.759	-.379
310	1407	.103	.121	.566	-.314
310	1408	.027	.135	.554	-.554
310	1409	-.092	.135	.393	-.518
310	1410	-.044	.134	.389	-.549
310	1411	.031	.119	.582	-.527

WD	TAP	CPMEAN	CPRMS	CPMAX	CPMIN
310	1412	.030	.126	.432	-.394
310	1413	.026	.123	.515	-.523
310	1414	-.053	.137	.463	-.467
310	1415	-.031	.139	.437	-.480
310	1416	.055	.105	.448	-.329
310	1417	.057	.110	.381	-.317
310	1418	.050	.126	.558	-.470
310	1419	.050	.110	.434	-.336
310	1420	.057	.132	.495	-.494
310	1421	.061	.136	.620	-.427
310	1422	.019	.109	.408	-.293
310	1423	.046	.112	.521	-.308
310	1424	.065	.119	.491	-.367
310	1425	.076	.123	.500	-.301
310	1426	.060	.111	.477	-.324
310	1427	.048	.114	.417	-.358
310	1428	.048	.118	.452	-.320
310	1429	.070	.118	.433	-.355
310	1430	.086	.116	.559	-.413
310	1431	.094	.117	.479	-.312
310	1432	.065	.107	.496	-.296
310	1433	.071	.104	.491	-.205
310	1434	.070	.116	.393	-.503
310	1435	.061	.123	.457	-.462
310	1901	.027	.122	.413	-.346
310	1902	.137	.113	.612	-.238
310	1903	.254	.102	.662	-.064
310	1904	.089	.113	.522	-.261
310	1905	.118	.115	.565	-.218
310	1906	.079	.117	.560	-.307
310	1907	-.002	.120	.503	-.503
310	1908	.032	.134	.599	-.489
310	1909	.068	.145	1.461	-.335
310	1910	.036	.131	.862	-.383
310	1911	.032	.124	.499	-.302
310	1912	-.014	.117	.411	-.372
310	1913	-.031	.138	.686	-.499
310	1914	.009	.113	.585	-.402
310	1915	-.021	.116	.445	-.506
310	1916	.026	.129	.569	-.319
310	1917	.081	.145	.612	-.451
310	1918	.110	.146	.716	-.339
310	1919	.094	.162	.890	-.304
310	1920	.100	.155	.797	-.446
310	1921	-.004	.113	.426	-.413
310	1922	-.004	.108	.395	-.372
310	1923	-.018	.136	.431	-.552
310	1924	.046	.141	.594	-.489
310	1925	.051	.145	.792	-.488
310	1926	-.010	.130	.581	-.466

WD	TAP	CPMEAN	CPRMS	CPMAX	CPMIN
310	1927	-.000	.134	.475	-.456
310	1928	-.019	.153	.434	-.518
310	1929	.014	.154	.618	-.505
310	1930	.106	.156	.739	-.381
310	1931	.091	.152	.708	-.373
310	1932	.073	.111	.515	-.316
310	1933	-.012	.121	.538	-.468
310	1934	-.063	.148	.429	-.628
310	1935	-.044	.174	.543	-.563
310	1936	.007	.158	.580	-.521
310	1937	.091	.170	.974	-.378
310	1938	.148	.171	.862	-.398
310	1939	.118	.140	.929	-.322
310	1940	.047	.115	.520	-.269
310	1941	.065	.121	.518	-.314
310	1942	.094	.130	.570	-.329
310	1943	.141	.161	.840	-.286
310	1944	.161	.158	.715	-.366
310	1945	.058	.116	.461	-.353
310	1946	.132	.112	.713	-.256
310	1947	.167	.145	.810	-.296
310	1948	.152	.159	.916	-.262
310	1949	.125	.161	.933	-.326
310	1950	.151	.178	1.328	-.351
310	1951	.035	.128	.572	-.389
310	1952	.104	.115	.512	-.263
310	1953	.173	.127	.605	-.274
310	1954	.185	.135	.690	-.233
310	1955	.177	.151	.871	-.283
310	1956	.190	.148	1.178	-.209
310	1957	.143	.127	.743	-.306
310	1958	.142	.132	.635	-.381
310	1959	.177	.178	1.150	-.313
310	1960	.182	.156	.910	-.234
310	1961	.165	.151	.956	-.306
310	1962	.167	.128	.620	-.284
310	1963	.184	.118	.733	-.138
310	1964	.156	.128	.916	-.189
310	1965	.126	.113	.575	-.248
310	1966	.127	.129	.712	-.278
310	1967	.162	.160	.833	-.318
310	1968	.173	.146	.882	-.258
320	101	-.365	.179	.139	-1.433
320	102	-.349	.164	.172	-1.131
320	103	-.341	.161	.941	-1.199
320	104	.351	.192	.927	-.524
320	105	.246	.176	.904	-.376
320	106	.127	.168	.798	-.590
320	107	.061	.166	.851	-.531
320	108	.075	.154	.722	-.383

WD	TAP	CPMEAN	CPRMS	CPMAX	CPMIN	WD	TAP	CPMEAN	CPRMS	CPMAX	CPMIN	WD	TAP	CPMEAN	CPRMS	CPMAX	CPMIN
320	109	.035	.155	.612	-.529	320	159	.323	.174	1.029	-.139	320	222	-.189	.113	.144	-.601
320	110	.089	.175	.739	-.503	320	160	.322	.166	.916	-.158	320	223	-.192	.108	.149	-.620
320	111	.049	.177	.650	-.793	320	161	.318	.157	.839	-.234	320	224	-.192	.121	.212	-.682
320	112	.049	.184	.633	-.685	320	162	.290	.172	.946	-.425	320	225	-.182	.126	.236	-.596
320	113	.016	.171	.604	-.685	320	163	.279	.169	.788	-.291	320	226	-.173	.117	.194	-.652
320	114	.476	.206	1.132	-.379	320	164	.118	.155	.843	-.397	320	227	-.168	.121	.292	-.668
320	115	.553	.198	1.468	-.056	320	165	.163	.139	.671	-.335	320	228	-.203	.121	.144	-.657
320	116	.509	.214	1.150	-.205	320	166	.135	.136	.659	-.330	320	229	-.203	.110	.159	-.580
320	117	.511	.204	1.296	-.155	320	167	.157	.122	.639	-.235	320	230	-.204	.128	.128	-.741
320	118	.463	.212	1.205	-.197	320	168	.256	.156	.831	-.146	320	231	-.191	.108	.203	-.594
320	119	.434	.191	1.176	-.139	320	169	.275	.161	.780	-.239	320	232	-.198	.120	.184	-.540
320	120	.456	.187	1.038	-.339	320	170	.226	.126	.702	-.163	320	233	-.176	.111	.168	-.580
320	121	.343	.193	1.007	-.317	320	171	.170	.126	.659	-.281	320	234	-.163	.117	.233	-.619
320	122	.345	.209	1.056	-.257	320	172	.132	.126	.557	-.257	320	235	-.173	.121	.231	-.633
320	123	.350	.219	1.012	-.515	320	173	.122	.138	.521	-.544	320	236	-.224	.133	.205	-.657
320	124	.419	.199	1.063	-.148	320	174	-.102	.130	.462	-.522	320	237	-.227	.140	.240	-.974
320	125	.541	.207	1.273	-.132	320	175	.078	.124	.552	-.416	320	238	-.205	.127	.245	-.659
320	126	.538	.221	1.155	-.162	320	176	.183	.132	.643	-.230	320	239	-.195	.119	.231	-.664
320	127	.546	.202	1.290	-.013	320	177	.167	.127	.569	-.282	320	240	-.204	.122	.229	-.640
320	128	.519	.203	1.213	-.053	320	178	-.058	.169	.417	-.722	320	241	-.176	.117	.221	-.748
320	129	.545	.229	1.269	-.125	320	179	-.133	.183	.356	-.813	320	242	-.177	.124	.221	-.876
320	130	.520	.194	1.255	-.132	320	180	.058	.128	.552	-.365	320	243	-.183	.141	.278	-1.521
320	131	.477	.207	1.179	-.337	320	181	.287	.162	.873	-.154	320	244	-.246	.162	.257	-.832
320	132	.491	.230	1.309	-.395	320	182	.274	.150	.934	-.174	320	245	-.251	.153	.145	-1.086
320	133	.502	.214	1.279	-.351	320	183	.081	.140	.692	-.612	320	246	-.237	.134	.167	-.874
320	134	.382	.216	1.320	-.190	320	184	.103	.141	.662	-.316	320	247	-.241	.128	.192	-.739
320	135	.426	.208	1.271	-.314	320	185	.424	.188	1.314	-.066	320	248	-.230	.132	.162	-.911
320	136	.486	.212	1.241	-.114	320	186	.320	.168	1.011	-.088	320	249	-.213	.127	.234	-.715
320	137	.514	.203	1.130	-.183	320	187	.197	.131	.684	-.218	320	250	-.219	.141	.336	-1.203
320	138	.504	.214	1.221	-.088	320	201	-.216	.141	.217	-.690	320	251	-.201	.139	.195	-.818
320	139	.470	.203	1.185	-.144	320	202	-.370	.160	.194	-1.079	320	252	-.292	.144	.113	-.774
320	140	.456	.198	1.116	-.099	320	203	-.267	.151	.609	-.769	320	253	-.283	.155	.163	-.771
320	141	.444	.188	1.218	-.099	320	204	-.230	.127	.156	-.682	320	254	-.288	.146	.173	-.880
320	142	.407	.199	1.001	-.220	320	205	-.236	.129	.145	-.729	320	255	-.236	.142	.186	-.796
320	143	.456	.211	1.130	-.290	320	206	-.235	.126	.193	-.778	320	256	-.224	.139	.187	-.756
320	144	.283	.205	1.062	-.461	320	207	-.232	.126	.235	-.685	320	257	-.248	.143	.123	-1.004
320	145	.341	.171	1.094	-.144	320	208	-.241	.136	.228	-1.021	320	258	-.275	.165	.196	-1.565
320	146	.373	.181	1.120	-.235	320	209	-.200	.141	.238	-.776	320	259	-.257	.164	.157	-1.063
320	147	.419	.188	1.186	-.139	320	210	-.189	.125	.208	-.673	320	260	-.276	.138	.252	-.815
320	148	.408	.189	1.109	-.097	320	211	-.206	.125	.166	-.708	320	261	-.272	.146	.174	-.845
320	149	.394	.171	.987	-.181	320	212	-.230	.138	.285	-.909	320	262	-.251	.144	.189	-.853
320	150	.395	.194	1.092	-.433	320	213	-.214	.130	.236	-.669	320	263	-.209	.131	.285	-.929
320	151	.363	.197	1.172	-.333	320	214	-.239	.122	.175	-.747	320	264	-.215	.125	.223	-.690
320	152	.331	.171	.894	-.260	320	215	-.198	.122	.291	-.620	320	265	-.192	.128	.204	-.828
320	153	.314	.171	1.006	-.280	320	216	-.189	.117	.163	-.554	320	266	-.253	.142	.190	-.929
320	154	.203	.167	.871	-.342	320	217	-.192	.124	.189	-.613	320	267	-.229	.142	.192	-.782
320	155	.294	.178	.909	-.383	320	218	-.177	.135	.266	-.620	320	268	-.199	.133	.270	-.787
320	156	.348	.184	1.065	-.230	320	219	-.179	.123	.212	-.638	320	269	-.208	.141	.310	-.945
320	157	.325	.161	.946	-.202	320	220	-.220	.137	.247	-1.037	320	270	-.196	.127	.250	-.808
320	158	.327	.161	.925	-.153	320	221	-.207	.120	.145	-.710	320	271	-.220	.129	.174	-.995

WD	TAP	CPMEAN	CPRMS	CPMAX	CPMIN	WD	TAP	CPMEAN	CPRMS	CPMAX	CPMIN	WD	TAP	CPMEAN	CPRMS	CPMAX	CPMIN
320	272	-.250	.152	.158	-1.164	320	350	-.282	.142	.131	-.813	320	442	-.258	.174	.200	-.965
320	301	-.298	.178	.162	-1.161	320	351	-.266	.157	.187	-.890	320	443	-.268	.161	.275	-1.152
320	302	-.313	.168	.241	-1.118	320	352	-.312	.156	.151	-.991	320	444	-.566	.263	.089	-1.593
320	303	-.305	.171	.354	-1.177	320	353	-.279	.161	.233	-.951	320	445	-.585	.266	.287	-1.953
320	304	-.284	.160	.187	-1.264	320	354	-.290	.153	.253	-.813	320	446	-.529	.337	.356	-1.967
320	305	-.273	.158	.201	-1.110	320	355	-.249	.147	.199	-.971	320	447	-.304	.258	.288	-1.236
320	306	-.283	.150	.207	-.842	320	356	-.256	.142	.235	-.898	320	448	-.142	.150	.281	-.774
320	307	-.294	.176	.242	-1.089	320	357	-.259	.137	.136	-.786	320	449	-.173	.126	.298	-.655
320	308	-.290	.169	.313	-1.279	320	358	-.239	.147	.224	-.806	320	450	-.235	.145	.219	-.887
320	309	-.303	.179	.429	-1.510	320	401	-.336	.200	.529	-1.424	320	451	-.255	.148	.190	-.835
320	310	-.253	.144	.159	-.832	320	402	-.297	.186	.226	-1.002	320	452	-.744	.445	.320	-2.461
320	311	-.268	.139	.166	-.967	320	403	-.306	.189	.304	-1.150	320	453	-.317	.255	.433	-1.588
320	312	-.276	.142	.139	-.834	320	404	-.644	.298	.013	-2.386	320	454	-.304	.204	.297	-1.129
320	313	-.294	.167	.239	-1.017	320	405	-.646	.262	.128	-1.643	320	455	-.303	.172	.217	-.980
320	314	-.278	.156	.186	-1.125	320	406	-.627	.318	.119	-2.031	320	456	-.283	.178	.262	-1.193
320	315	-.269	.159	.246	-1.279	320	407	-.447	.233	.214	-1.490	320	457	-.216	.144	.217	-.798
320	316	-.244	.132	.246	-.773	320	408	-.366	.199	.354	-1.334	320	458	-.241	.138	.187	-.931
320	317	-.288	.146	.170	-.947	320	409	-.344	.201	.237	-1.327	320	459	-.271	.148	.176	-.773
320	318	-.290	.158	.161	-1.345	320	410	-.326	.200	.232	-1.340	320	460	-.296	.141	.175	-.903
320	319	-.282	.160	.157	-1.352	320	411	-.298	.181	.257	-1.295	320	461	-.326	.164	.153	-1.085
320	320	-.278	.152	.186	-.933	320	412	-.632	.273	.090	-1.645	320	462	-.302	.160	.117	-.857
320	321	-.272	.153	.193	-1.073	320	413	-.714	.280	.014	-1.778	320	463	-.202	.127	.182	-.647
320	322	-.259	.147	.235	-.970	320	414	-.668	.284	.242	-1.646	320	464	-.238	.141	.246	-.895
320	323	-.261	.140	.159	-.919	320	415	-.416	.201	.235	-1.281	320	465	-.241	.135	.201	-.735
320	324	-.261	.138	.191	-.882	320	416	-.307	.189	.228	-1.243	320	466	-.325	.159	.173	-.935
320	325	-.282	.159	.166	-.944	320	417	-.269	.180	.246	-1.090	320	467	-.288	.146	.226	-.781
320	326	-.299	.159	.203	-1.033	320	418	-.289	.173	.178	-1.035	320	468	-.285	.153	.184	-.788
320	327	-.278	.168	.209	-1.178	320	419	-.290	.170	.196	-.990	320	469	-.246	.153	.319	-.822
320	328	-.252	.140	.200	-1.359	320	420	-.509	.198	.037	-1.580	320	470	-.203	.137	.272	-.657
320	329	-.263	.139	.107	-.843	320	421	-.499	.208	.065	-1.315	320	471	-.217	.130	.221	-.698
320	330	-.269	.145	.177	-.908	320	422	-.499	.198	.131	-1.431	320	472	-.711	.401	.330	-2.895
320	331	-.274	.162	.193	-1.054	320	423	-.490	.221	.139	-1.306	320	501	.384	.218	1.141	-.334
320	332	-.290	.169	.267	-.995	320	424	-.366	.192	.180	-1.173	320	502	.376	.207	1.036	-.419
320	333	-.286	.157	.177	-.977	320	425	-.271	.168	.301	-.971	320	503	.270	.202	1.124	-.328
320	334	-.258	.103	-.009	-.627	320	426	-.294	.174	.316	-1.119	320	504	.122	.194	.846	-.434
320	335	-.280	.145	.202	-1.015	320	427	-.284	.174	.298	-1.080	320	505	.558	.230	1.369	-.165
320	336	-.271	.147	.145	-.878	320	428	-.485	.200	.081	-3.150	320	506	.508	.253	1.372	-.468
320	337	-.320	.177	.203	-1.270	320	429	-.500	.217	.148	-1.881	320	507	.314	.210	1.258	-.225
320	338	-.296	.164	.184	-1.141	320	430	-.527	.234	.099	-1.736	320	508	.133	.198	.895	-.457
320	339	-.299	.165	.186	-1.018	320	431	-.466	.243	.108	-1.417	320	509	.459	.266	1.207	-.853
320	340	-.301	.162	.164	-1.207	320	432	-.401	.231	.269	-1.410	320	510	.437	.255	1.151	-.637
320	341	-.290	.160	.135	-.896	320	433	-.307	.195	.212	-.949	320	511	.275	.199	1.071	-.366
320	342	-.314	.170	.170	-1.363	320	434	-.279	.183	.329	-1.031	320	512	.063	.172	.647	-.644
320	343	-.332	.185	.148	-1.416	320	435	-.300	.175	.347	-1.148	320	513	.333	.264	1.210	-.653
320	344	-.322	.183	.226	-1.396	320	436	-.525	.212	.047	-2.266	320	514	.367	.253	1.169	-.436
320	345	-.335	.161	.142	-1.039	320	437	-.539	.238	.151	-2.006	320	515	.206	.192	1.043	-.423
320	346	-.313	.161	.174	-1.042	320	438	-.531	.255	.286	-1.791	320	516	.031	.162	.597	-.571
320	347	-.334	.161	.194	-1.046	320	439	-.444	.250	.226	-1.528	320	517	.275	.233	1.043	-.839
320	348	-.300	.152	.191	-.926	320	440	-.315	.232	.268	-1.551	320	518	.268	.205	1.107	-.905
320	349	-.281	.162	.179	-.911	320	441	-.243	.190	.302	-1.153	320	519	.125	.161	.827	-.421

WD	TAP	CPMEAN	CPRMS	CPMAX	CPMIN	WD	TAP	CPMEAN	CPRMS	CPMAX	CPMIN	WD	TAP	CPMEAN	CPRMS	CPMAX	CPMIN
320	520	-.035	.161	.684	-.575	320	802	-.272	.142	.207	-.842	320	1116	.102	.122	.544	-.346
320	521	.252	.206	.932	-.521	320	803	.220	.138	.693	-.290	320	1117	.079	.114	.594	-.247
320	522	.234	.186	.838	-.543	320	804	-.200	.125	.231	-.741	320	1118	.039	.122	.540	-.434
320	523	.108	.154	.734	-.390	320	805	-.126	.122	.189	-.820	320	1119	-.002	.113	.331	-.755
320	524	-.033	.152	.513	-.621	320	806	-.249	.137	.189	-.775	320	1120	-.115	.127	.243	-.685
320	525	.015	.184	.601	-.851	320	807	-.245	.143	.145	-1.344	320	1121	.088	.136	.546	-.295
320	526	.050	.165	.651	-.521	320	808	-.254	.138	.126	-.851	320	1122	.080	.133	.485	-.321
320	527	.046	.154	.668	-.553	320	809	-.299	.140	.054	-.847	320	1123	.068	.126	.518	-.291
320	528	-.007	.158	.688	-.776	320	810	-.108	.199	.471	-.786	320	1124	-.034	.131	.446	-.546
320	529	-.103	.182	.579	-.696	320	811	-.176	.142	.226	-.672	320	1125	.134	.123	.557	-.471
320	530	-.094	.145	.370	-.667	320	812	-.151	.153	.414	-.783	320	1126	.136	.123	.573	-.349
320	531	-.263	.245	.506	-1.143	320	813	-.169	.190	.400	-.866	320	1201	.132	.111	.489	-.277
320	532	-.175	.141	.469	-.737	320	814	-.149	.202	.412	-1.245	320	1202	.131	.135	.691	-.317
320	533	.071	.150	.613	-.441	320	815	-.250	.176	.378	-.947	320	1203	.164	.132	.620	-.273
320	534	-.122	.148	.496	-.728	320	901	-.293	.178	.212	-.979	320	1204	.133	.130	.573	-.369
320	601	-.061	.128	.418	-.545	320	902	-.278	.182	.279	-1.197	320	1205	.137	.134	.584	-.324
320	602	.041	.137	.569	-.446	320	903	-.266	.162	.485	-.922	320	1206	.170	.133	.647	-.252
320	603	.073	.234	.741	-1.620	320	904	-.239	.162	.320	-.823	320	1207	.184	.129	.635	-.335
320	604	-.026	.332	.875	-1.370	320	905	-.288	.178	.292	-.991	320	1208	.215	.145	.939	-.225
320	605	-.057	.128	.423	-.611	320	906	-.308	.158	.183	-.932	320	1209	.240	.150	1.000	-.204
320	606	.072	.156	.722	-.890	320	907	-.317	.161	.242	-.927	320	1210	.115	.123	.785	-.320
320	607	-.019	.355	.873	-1.594	320	908	-.340	.167	.315	-.978	320	1211	.193	.133	.692	-.190
320	608	-.081	.343	1.007	-1.488	320	909	-.337	.165	.123	-1.143	320	1212	.062	.127	.587	-.345
320	609	-.088	.142	.378	-1.040	320	910	-.327	.180	.198	-1.308	320	1213	-.102	.119	.240	-.555
320	610	-.022	.184	.432	-.944	320	911	-.340	.165	.156	-1.113	320	1214	.121	.146	.588	-.474
320	611	-.199	.314	.699	-1.566	320	912	-.306	.175	.217	-.995	320	1215	.249	.129	.806	-.098
320	612	-.242	.279	.848	-1.403	320	913	-.365	.201	.183	-1.122	320	1216	.290	.155	1.019	-.143
320	613	-.099	.155	.410	-1.123	320	914	-.342	.161	.132	-1.007	320	1217	.115	.115	.558	-.235
320	614	-.042	.182	.544	-.983	320	915	-.371	.166	.148	-1.192	320	1218	.139	.111	.606	-.295
320	615	-.232	.308	.657	-1.836	320	916	-.311	.186	.532	-1.129	320	1219	.027	.097	.236	-.295
320	616	-.279	.246	.615	-1.451	320	917	-.457	.263	.163	-2.228	320	1220	.158	.122	.616	-.250
320	617	-.102	.128	.341	-.729	320	918	-.411	.213	.226	-1.806	320	1221	.301	.160	1.015	-.133
320	618	-.098	.178	.422	-.925	320	919	-.380	.245	.522	-1.296	320	1222	.121	.107	.479	-.293
320	619	-.291	.288	.471	-1.791	320	920	-.424	.195	.217	-1.287	320	1223	.049	.107	.424	-.356
320	620	-.292	.250	.596	-1.615	320	921	-.700	.297	.184	-1.812	320	1224	.221	.128	.913	-.127
320	621	-.142	.141	.348	-.837	320	1101	.143	.114	.538	-.277	320	1225	.384	.205	1.218	-.211
320	622	-.123	.166	.349	-.994	320	1102	.157	.131	.639	-.266	320	1226	.271	.160	.927	-.224
320	623	-.312	.244	.358	-1.240	320	1103	.175	.140	.623	-.445	320	1227	.171	.125	.643	-.159
320	624	-.312	.231	.456	-1.292	320	1104	-.027	.113	.384	-.409	320	1228	.046	.109	.427	-.419
320	625	-.185	.131	.187	-.683	320	1105	-.010	.108	.352	-.380	320	1229	.106	.122	.590	-.434
320	626	-.138	.144	.312	-.665	320	1106	-.085	.122	.325	-.520	320	1301	.126	.123	.515	-.287
320	627	-.263	.169	.382	-1.140	320	1107	.080	.146	.616	-.385	320	1302	.142	.131	.536	-.279
320	628	-.292	.184	.310	-1.221	320	1108	.092	.126	.541	-.412	320	1303	.151	.136	.565	-.269
320	629	-.194	.147	.292	-1.321	320	1109	.106	.121	.509	-.399	320	1304	.085	.127	.551	-.430
320	630	-.261	.136	.214	-.837	320	1110	.128	.132	.715	-.325	320	1305	.195	.127	.650	-.266
320	631	-.240	.146	.169	-.790	320	1111	.114	.115	.626	-.283	320	1306	.186	.128	.647	-.352
320	632	-.320	.153	.202	-.940	320	1112	-.083	.121	.333	-.496	320	1307	.177	.154	.710	-.284
320	633	.066	.125	.584	-.322	320	1113	.074	.147	.543	-.376	320	1308	.084	.133	.535	-.406
320	634	-.288	.189	.498	-.913	320	1114	.103	.130	.498	-.376	320	1309	.079	.128	.503	-.404
320	801	-.257	.135	.153	-.705	320	1115	.131	.121	.633	-.286	320	1311	.242	.127	.770	-.145

WD	TAP	CPMEAN	CPRMS	CPMAX	CPMIN	WD	TAP	CPMEAN	CPRMS	CPMAX	CPMIN	WD	TAP	CPMEAN	CPRMS	CPMAX	CPMIN
320	1312	.219	.131	.738	-.164	320	1431	.183	.128	.690	-.152	320	1946	.241	.135	.713	-.181
320	1313	.162	.160	.913	-.327	320	1432	.134	.116	.527	-.201	320	1947	.322	.162	1.012	-.131
320	1314	.120	.125	.635	-.315	320	1433	.193	.133	.833	-.217	320	1948	.362	.202	1.159	-.139
320	1315	.292	.159	1.060	-.194	320	1434	.138	.123	.559	-.257	320	1949	.350	.222	1.168	-.164
320	1316	.303	.158	.918	-.146	320	1435	.129	.120	.532	-.246	320	1950	.354	.191	1.274	-.164
320	1317	.164	.119	.640	-.201	320	1901	.105	.119	.500	-.324	320	1951	.163	.138	.616	-.293
320	1318	.240	.144	.695	-.323	320	1902	.230	.110	.594	-.221	320	1952	.207	.133	.787	-.206
320	1319	.184	.129	.616	-.237	320	1903	.342	.101	.712	.053	320	1953	.254	.137	.757	-.101
320	1320	.162	.125	.578	-.217	320	1904	.204	.136	.676	-.288	320	1954	.343	.146	.961	-.069
320	1321	.141	.126	.650	-.280	320	1905	.233	.118	.669	-.168	320	1955	.376	.191	1.116	-.107
320	1322	.208	.130	.724	-.162	320	1906	.195	.117	.568	-.149	320	1956	.299	.164	1.077	-.172
320	1323	.312	.167	.934	-.157	320	1907	.111	.142	.639	-.320	320	1957	.247	.148	1.107	-.117
320	1324	.172	.115	.580	-.202	320	1908	.145	.139	.567	-.425	320	1958	.340	.180	1.030	-.218
320	1325	.133	.124	.531	-.359	320	1909	.209	.161	1.055	-.243	320	1959	.389	.202	1.686	-.233
320	1326	.198	.135	.678	-.183	320	1910	.182	.153	1.077	-.255	320	1960	.324	.185	1.394	-.219
320	1327	.165	.118	.618	-.214	320	1911	.156	.139	.647	-.348	320	1961	.336	.179	1.203	-.113
320	1328	.190	.134	.724	-.215	320	1912	.124	.144	.687	-.365	320	1962	.252	.136	.914	-.122
320	1329	.384	.186	1.088	-.061	320	1913	.065	.156	.602	-.419	320	1963	.273	.143	.787	-.208
320	1330	.166	.167	.826	-.590	320	1914	.136	.118	.568	-.275	320	1964	.213	.138	.683	-.189
320	1331	.189	.142	.811	-.201	320	1915	.106	.122	.497	-.280	320	1965	.245	.133	.718	-.150
320	1401	.216	.162	.883	-.186	320	1916	.170	.151	.788	-.298	320	1966	.309	.156	.875	-.130
320	1402	.123	.131	.611	-.298	320	1917	.262	.169	.903	-.680	320	1967	.333	.174	1.242	-.172
320	1403	.191	.149	.725	-.210	320	1918	.318	.188	.972	-.241	320	1968	.329	.161	1.010	-.216
320	1404	.113	.110	.550	-.301	320	1919	.241	.165	1.022	-.209	330	101	-.414	.201	.150	-1.397
320	1405	.163	.135	.596	-.316	320	1920	.287	.180	1.116	-.201	330	102	-.417	.184	.080	-1.233
320	1406	.160	.122	.584	-.324	320	1921	.133	.120	.599	-.285	330	103	-.391	.175	.179	-1.259
320	1407	.128	.107	.556	-.219	320	1922	.148	.121	.625	-.188	330	104	.284	.185	1.008	-.357
320	1408	.154	.144	.674	-.243	320	1923	.150	.143	.600	-.342	330	105	.213	.164	.774	-.380
320	1409	-.017	.135	.458	-.454	320	1924	.218	.159	.846	-.198	330	106	.078	.162	.653	-.404
320	1410	.057	.134	.471	-.470	320	1925	.237	.182	.906	-.225	330	107	.018	.163	.791	-.432
320	1411	.129	.121	.511	-.348	320	1926	.097	.131	.664	-.414	330	108	.037	.151	.599	-.506
320	1412	.134	.127	.598	-.319	320	1927	.147	.133	.666	-.349	330	109	-.008	.153	.595	-.509
320	1413	.094	.130	.511	-.284	320	1928	.171	.147	.663	-.343	330	110	.078	.149	.641	-.443
320	1414	.015	.135	.487	-.572	320	1929	.231	.154	.732	-.289	330	111	.083	.155	.609	-.687
320	1415	.068	.151	.619	-.498	320	1930	.306	.149	.911	-.166	330	112	.132	.178	.716	-.705
320	1416	.131	.110	.494	-.195	320	1931	.286	.175	.940	-.195	330	113	.095	.205	.684	-.574
320	1417	.140	.115	.494	-.208	320	1932	.155	.117	.585	-.200	330	114	.527	.209	1.392	-.167
320	1418	.162	.153	.771	-.331	320	1933	.137	.137	.685	-.279	330	115	.503	.199	1.177	-.216
320	1419	.157	.127	.608	-.246	320	1934	.175	.151	.744	-.602	330	116	.517	.203	1.252	-.065
320	1420	.166	.149	.805	-.238	320	1935	.201	.172	.786	-.477	330	117	.503	.185	1.184	-.051
320	1421	.157	.136	.741	-.320	320	1936	.245	.163	.874	-.342	330	118	.479	.201	1.130	-.135
320	1422	.105	.121	.477	-.256	320	1937	.305	.180	1.119	-.166	330	119	.455	.189	1.156	-.079
320	1423	.128	.121	.569	-.197	320	1938	.374	.204	1.265	-.158	330	120	.455	.195	1.093	-.306
320	1424	.140	.121	.769	-.254	320	1939	.251	.155	.950	-.254	330	121	.440	.179	1.204	-.376
320	1425	.139	.115	.562	-.320	320	1940	.182	.144	.653	-.303	330	122	.423	.222	1.163	-.401
320	1426	.153	.119	.667	-.165	320	1941	.208	.144	.673	-.284	330	123	.430	.224	1.153	-.355
320	1427	.137	.105	.459	-.217	320	1942	.279	.161	.916	-.143	330	124	.507	.211	1.134	-.182
320	1428	.130	.118	.587	-.209	320	1943	.320	.163	1.146	-.154	330	125	.562	.186	1.128	.082
320	1429	.146	.119	.606	-.235	320	1944	.376	.178	1.053	-.163	330	126	.569	.211	1.367	-.011
320	1430	.171	.122	.577	-.246	320	1945	.184	.126	.600	-.266	330	127	.582	.210	1.243	-.125

WD	TAP	CPMEAN	CPRMS	CPMAX	CPMIN	WD	TAP	CPMEAN	CPRMS	CPMAX	CPMIN	WD	TAP	CPMEAN	CPRMS	CPMAX	CPMIN
330	128	.556	.208	1.210	-.044	330	178	-.030	.184	.503	-.712	330	241	-.214	.144	.258	-.934
330	129	.561	.206	1.270	-.125	330	179	-.143	.215	.656	-.829	330	242	-.215	.157	.267	-1.041
330	130	.583	.206	1.162	-.042	330	180	.083	.128	.549	-.369	330	243	-.228	.142	.239	-.937
330	131	.547	.187	1.198	-.060	330	181	.337	.165	1.051	-.127	330	244	-.287	.170	.306	-.932
330	132	.560	.221	1.332	-.247	330	182	.312	.134	.894	-.068	330	245	-.283	.163	.214	-1.020
330	133	.563	.208	1.296	-.229	330	183	.087	.150	.567	-.396	330	246	-.292	.157	.174	-.932
330	134	.426	.205	1.183	-.185	330	184	.138	.136	.719	-.326	330	247	-.267	.150	.150	-.956
330	135	.485	.176	1.055	-.003	330	185	.413	.186	1.296	-.137	330	248	-.285	.154	.244	-1.035
330	136	.521	.190	1.406	.019	330	186	.380	.168	1.090	-.147	330	249	-.262	.153	.124	-1.241
330	137	.530	.193	1.235	-.146	330	187	.205	.130	.778	-.226	330	250	-.272	.161	.253	-1.261
330	138	.527	.185	1.171	.034	330	201	-.274	.163	.181	-1.050	330	251	-.253	.165	.177	-1.223
330	139	.540	.187	1.215	.018	330	202	-.384	.163	.289	-1.220	330	252	-.294	.160	.249	-1.194
330	140	.521	.176	1.071	.004	330	203	-.258	.184	.817	-1.030	330	253	-.308	.151	.148	-.928
330	141	.513	.196	1.065	-.145	330	204	-.263	.154	.230	-.827	330	254	-.298	.170	.187	-1.284
330	142	.492	.216	1.168	-.365	330	205	-.271	.155	.132	-.906	330	255	-.276	.155	.194	-1.113
330	143	.451	.188	1.127	-.219	330	206	-.253	.133	.123	-.785	330	256	-.253	.141	.149	-.793
330	144	.330	.185	1.092	-.272	330	207	-.261	.143	.146	-1.085	330	257	-.281	.158	.167	-1.107
330	145	.432	.190	1.125	-.206	330	208	-.247	.148	.207	-1.160	330	258	-.324	.207	.191	-1.578
330	146	.446	.192	1.104	-.153	330	209	-.221	.146	.315	-.904	330	259	-.347	.211	.079	-2.087
330	147	.434	.175	1.120	-.194	330	210	-.218	.132	.167	-.749	330	260	-.288	.164	.249	-1.215
330	148	.450	.180	1.108	-.056	330	211	-.219	.134	.230	-.691	330	261	-.290	.164	.251	-.925
330	149	.424	.161	.972	-.097	330	212	-.244	.142	.186	-1.000	330	262	-.269	.170	.151	-1.133
330	150	.423	.166	1.083	-.111	330	213	-.249	.141	.218	-.758	330	263	-.262	.146	.153	-.983
330	151	.406	.167	1.046	-.240	330	214	-.258	.123	.091	-.731	330	264	-.251	.140	.186	-.807
330	152	.398	.181	1.035	-.138	330	215	-.222	.137	.295	-.767	330	265	-.239	.147	.180	-.760
330	153	.399	.182	.997	-.120	330	216	-.212	.130	.246	-.614	330	266	-.261	.161	.184	-.942
330	154	.255	.168	.866	-.346	330	217	-.199	.127	.183	-.688	330	267	-.261	.154	.175	-.899
330	155	.323	.176	1.166	-.238	330	218	-.202	.120	.207	-.688	330	268	-.243	.149	.225	-.752
330	156	.356	.177	.871	-.212	330	219	-.205	.127	.232	-.574	330	269	-.245	.157	.191	-1.095
330	157	.352	.154	.910	-.079	330	220	-.249	.139	.223	-.814	330	270	-.255	.151	.184	-.949
330	158	.391	.167	1.039	-.097	330	221	-.227	.129	.158	-.635	330	271	-.246	.140	.251	-.848
330	159	.342	.158	.944	-.134	330	222	-.229	.128	.188	-.663	330	272	-.309	.184	.184	-1.844
330	160	.357	.159	.956	-.159	330	223	-.218	.129	.167	-.732	330	301	-.338	.189	.218	-1.252
330	161	.331	.148	.817	-.122	330	224	-.214	.116	.125	-.646	330	302	-.328	.176	.262	-1.072
330	162	.329	.170	.974	-.136	330	225	-.214	.121	.241	-.651	330	303	-.341	.180	.133	-1.184
330	163	.304	.157	.882	-.176	330	226	-.191	.135	.265	-.748	330	304	-.338	.176	.140	-1.149
330	164	.129	.153	.631	-.372	330	227	-.214	.127	.174	-.619	330	305	-.313	.169	.293	-1.438
330	165	.184	.130	.758	-.275	330	228	-.254	.150	.269	-.855	330	306	-.309	.162	.131	-1.164
330	166	.139	.125	.547	-.312	330	229	-.243	.142	.214	-.732	330	307	-.341	.186	.375	-1.198
330	167	.209	.121	.679	-.175	330	230	-.247	.142	.257	-.767	330	308	-.322	.176	.284	-1.764
330	168	.305	.150	.864	-.245	330	231	-.227	.127	.185	-.711	330	309	-.330	.173	.128	-1.301
330	169	.307	.137	.794	-.108	330	232	-.221	.130	.255	-.814	330	310	-.305	.162	.145	-.981
330	170	.255	.123	.723	-.136	330	233	-.222	.141	.190	-.799	330	311	-.295	.150	.243	-1.014
330	171	.191	.126	.667	-.245	330	234	-.202	.124	.299	-.644	330	312	-.312	.168	.207	-1.051
330	172	.152	.131	.594	-.367	330	235	-.203	.132	.207	-.765	330	313	-.324	.185	.280	-1.142
330	173	.132	.144	.587	-.345	330	236	-.290	.146	.171	-1.366	330	314	-.331	.175	.240	-1.010
330	174	-.120	.132	.469	-.546	330	237	-.269	.144	.141	-.867	330	315	-.333	.186	.448	-1.328
330	175	.092	.117	.448	-.288	330	238	-.266	.154	.265	-1.027	330	316	-.272	.143	.242	-.947
330	176	.211	.126	.664	-.201	330	239	-.254	.135	.167	-.858	330	317	-.276	.147	.110	-.892
330	177	.173	.118	.579	-.206	330	240	-.240	.137	.146	-.732	330	318	-.284	.146	.181	-.925

WD	TAP	CPMEAN	CPRMS	CPMAX	CPMIN
330	319	-.370	.182	.218	-1.242
330	320	-.330	.171	.211	-1.167
330	321	-.347	.173	.216	-1.049
330	322	-.297	.158	.183	-.943
330	323	-.272	.137	.167	-.786
330	324	-.283	.147	.232	-.930
330	325	-.390	.196	.154	-1.156
330	326	-.357	.152	.094	-1.020
330	327	-.345	.171	.110	-1.076
330	328	-.319	.166	.258	-1.029
330	329	-.301	.140	.132	-.813
330	330	-.312	.151	.242	-1.036
330	331	-.360	.161	.222	-1.080
330	332	-.352	.184	.136	-1.545
330	333	-.334	.166	.132	-.983
330	334	-.320	.117	-.026	-.705
330	335	-.301	.161	.149	-.932
330	336	-.330	.170	.165	-1.173
330	337	-.359	.192	.152	-1.206
330	338	-.338	.194	.200	-1.335
330	339	-.326	.173	.291	-1.135
330	340	-.348	.181	.209	-1.542
330	341	-.335	.169	.167	-1.103
330	342	-.333	.170	.198	-1.284
330	343	-.325	.189	.201	-1.452
330	344	-.284	.162	.229	-1.243
330	345	-.296	.170	.168	-.977
330	346	-.300	.169	.192	-1.037
330	347	-.318	.181	.203	-1.114
330	348	-.290	.168	.194	-1.118
330	349	-.271	.159	.187	-1.088
330	350	-.260	.156	.301	-.983
330	351	-.255	.165	.244	-.888
330	352	-.279	.174	.263	-1.002
330	353	-.272	.164	.230	-.916
330	354	-.261	.164	.247	-1.111
330	355	-.229	.144	.218	-.795
330	356	-.227	.147	.276	-.864
330	357	-.224	.152	.326	-.835
330	358	-.198	.146	.278	-.775
330	401	-.397	.179	.693	-1.111
330	402	-.407	.207	.320	-1.355
330	403	-.381	.220	.289	-1.250
330	404	-.495	.242	.144	-1.827
330	405	-.463	.250	.172	-1.535
330	406	-.522	.266	.229	-1.781
330	407	-.457	.234	.236	-1.669
330	408	-.406	.197	.229	-1.302
330	409	-.363	.195	.230	-1.236
330	410	-.359	.206	.293	-1.239

WD	TAP	CPMEAN	CPRMS	CPMAX	CPMIN
330	411	-.367	.216	.269	-1.414
330	412	-.450	.249	.163	-1.502
330	413	-.449	.234	.141	-1.645
330	414	-.506	.230	.128	-1.471
330	415	-.436	.189	.150	-1.083
330	416	-.395	.195	.167	-1.270
330	417	-.354	.191	.251	-1.163
330	418	-.353	.201	.218	-1.323
330	419	-.360	.202	.189	-1.207
330	420	-.413	.202	.137	-1.702
330	421	-.417	.182	.227	-1.146
330	422	-.418	.203	.166	-1.295
330	423	-.441	.199	.098	-1.397
330	424	-.428	.191	.128	-1.285
330	425	-.391	.180	.300	-1.171
330	426	-.395	.190	.142	-1.230
330	427	-.384	.198	.275	-1.272
330	428	-.424	.185	.122	-1.092
330	429	-.417	.174	.036	-1.232
330	430	-.447	.199	.166	-1.561
330	431	-.439	.193	.344	-1.506
330	432	-.460	.197	.148	-1.350
330	433	-.384	.183	.186	-1.118
330	434	-.375	.188	.240	-1.113
330	435	-.401	.211	.183	-1.462
330	436	-.490	.195	.105	-1.271
330	437	-.484	.194	.028	-1.662
330	438	-.485	.202	.034	-1.655
330	439	-.520	.226	.102	-1.748
330	440	-.479	.206	.240	-1.489
330	441	-.384	.205	.247	-1.116
330	442	-.356	.180	.267	-1.282
330	443	-.365	.180	.254	-1.113
330	444	-.595	.247	.061	-1.656
330	445	-.583	.260	.081	-1.771
330	446	-.608	.274	-.064	-1.859
330	447	-.486	.208	.051	-1.372
330	448	-.342	.203	.253	-1.321
330	449	-.305	.168	.163	-.909
330	450	-.290	.168	.181	-.947
330	451	-.314	.176	.262	-.956
330	452	-.740	.395	.042	-2.446
330	453	-.414	.233	.202	-1.548
330	454	-.397	.205	.152	-1.751
330	455	-.334	.156	.117	-.903
330	456	-.348	.169	.213	-1.042
330	457	-.286	.157	.262	-.833
330	458	-.278	.148	.273	-.971
330	459	-.281	.153	.209	-.903
330	460	-.349	.174	.151	-1.007

WD	TAP	CPMEAN	CPRMS	CPMAX	CPMIN
330	461	-.381	.168	.225	-.933
330	462	-.333	.163	.195	-.937
330	463	-.292	.133	.137	-.778
330	464	-.271	.148	.266	-.802
330	465	-.272	.149	.249	-.926
330	466	-.357	.153	.109	-.923
330	467	-.388	.172	.152	-1.014
330	468	-.299	.155	.156	-.901
330	469	-.320	.133	.104	-.744
330	470	-.282	.142	.152	-.835
330	471	-.278	.144	.190	-1.006
330	472	-.688	.406	.055	-2.493
330	501	.408	.222	1.043	-.575
330	502	.342	.202	.990	-.296
330	503	.239	.190	.876	-.365
330	504	.097	.196	.801	-.533
330	505	.527	.239	1.334	-.597
330	506	.479	.242	1.195	-.700
330	507	.329	.197	1.065	-.240
330	508	.135	.167	.693	-.504
330	509	.429	.271	1.217	-.824
330	510	.424	.244	1.250	-.451
330	511	.282	.193	1.024	-.370
330	512	.060	.158	.636	-.509
330	513	.329	.248	1.151	-.427
330	514	.342	.229	1.121	-.592
330	515	.222	.186	.872	-.462
330	516	.034	.170	.590	-.480
330	517	.323	.234	.956	-1.191
330	518	.308	.200	1.043	-.639
330	519	.165	.171	.738	-.383
330	520	-.023	.166	.619	-.735
330	521	.270	.193	1.015	-.485
330	522	.261	.195	.850	-.692
330	523	.126	.162	.838	-.437
330	524	-.024	.172	.643	-.673
330	525	.038	.224	.740	-1.123
330	526	.035	.189	.800	-.723
330	527	.020	.170	.655	-.565
330	528	-.002	.170	.637	-.640
330	529	-.131	.217	.623	-.742
330	530	-.101	.155	.475	-.692
330	531	-.356	.244	.631	-1.152
330	532	-.200	.144	.306	-.780
330	533	.089	.159	.702	-.521
330	534	-.153	.150	.373	-.739
330	601	-.009	.147	.538	-.497
330	602	.099	.162	.743	-.451
330	603	.208	.213	.864	-.826
330	604	.153	.333	1.067	-1.831

WD	TAP	CPMEAN	CPRMS	CPMAX	CPMIN
330	605	.010	.141	.556	-.570
330	606	.138	.170	.614	-.566
330	607	.212	.293	.866	-1.748
330	608	.134	.383	1.283	-1.308
330	609	-.046	.134	.408	-.959
330	610	.088	.200	.712	-.944
330	611	.038	.358	.945	-1.183
330	612	-.063	.317	.895	-1.176
330	613	-.074	.153	.432	-.798
330	614	.000	.211	.607	-1.059
330	615	-.076	.337	.917	-1.162
330	616	-.121	.323	.837	-1.086
330	617	-.119	.145	.406	-.857
330	618	-.069	.190	.451	-.870
330	619	-.177	.323	.641	-1.486
330	620	-.234	.297	.713	-1.368
330	621	-.161	.151	.437	-.967
330	622	-.132	.186	.387	-.781
330	623	-.311	.252	.495	-1.349
330	624	-.360	.233	.466	-1.297
330	625	-.205	.137	.235	-.712
330	626	-.187	.160	.339	-.898
330	627	-.316	.169	.207	-1.148
330	628	-.289	.161	.263	-1.269
330	629	-.221	.151	.303	-.767
330	630	-.288	.136	.171	-.839
330	631	-.296	.155	.202	-1.169
330	632	-.372	.163	.102	-1.040
330	633	.067	.135	.646	-.386
330	634	-.335	.216	.501	-1.253
330	801	-.242	.145	.185	-.959
330	802	-.251	.155	.195	-.927
330	803	.238	.135	.763	-.227
330	804	-.241	.146	.187	-.754
330	805	-.134	.126	.212	-.637
330	806	-.299	.140	.092	-.911
330	807	-.265	.153	.197	-.891
330	808	-.302	.135	.114	-.790
330	809	-.309	.137	.133	-.767
330	810	-.168	.192	.676	-.886
330	811	-.194	.151	.255	-.778
330	812	-.191	.164	.324	-.884
330	813	-.197	.189	.442	-1.052
330	814	-.217	.205	.389	-1.050
330	815	-.282	.183	.257	-1.184
330	901	-.348	.201	.176	-1.521
330	902	-.338	.196	.330	-1.455
330	903	-.314	.171	.331	-1.093
330	904	-.234	.174	.298	-.901
330	905	-.347	.188	.255	-1.135

WD	TAP	CPMEAN	CPRMS	CPMAX	CPMIN
330	906	-.359	.186	.129	-1.584
330	907	-.381	.181	.120	-1.308
330	908	-.370	.168	.130	-1.063
330	909	-.372	.195	.340	-1.430
330	910	-.416	.205	.211	-2.019
330	911	-.413	.178	.136	-1.397
330	912	-.361	.174	.153	-.972
330	913	-.430	.215	.174	-1.591
330	914	-.397	.160	.033	-1.219
330	915	-.408	.176	.237	-1.151
330	916	-.385	.210	.297	-1.178
330	917	-.521	.279	.129	-2.180
330	918	-.453	.239	.101	-1.823
330	919	-.455	.196	.262	-1.247
330	920	-.419	.185	.174	-1.138
330	921	-.592	.269	.158	-1.528
330	1101	.168	.121	.565	-.226
330	1102	.184	.134	.677	-.266
330	1103	.183	.119	.591	-.231
330	1104	-.026	.114	.326	-.497
330	1105	-.003	.101	.336	-.344
330	1106	-.096	.132	.333	-.573
330	1107	.087	.122	.520	-.392
330	1108	.112	.116	.541	-.288
330	1109	.102	.111	.517	-.435
330	1110	.128	.110	.451	-.260
330	1111	.112	.107	.510	-.232
330	1112	-.107	.119	.265	-.558
330	1113	.087	.138	.551	-.792
330	1114	.092	.112	.416	-.348
330	1115	.132	.102	.434	-.206
330	1116	.118	.106	.558	-.351
330	1117	.087	.110	.447	-.318
330	1118	.052	.128	.507	-.481
330	1119	-.009	.111	.518	-.659
330	1120	-.141	.134	.258	-.586
330	1121	.076	.112	.451	-.287
330	1122	.073	.113	.457	-.421
330	1123	.061	.104	.436	-.292
330	1124	-.056	.131	.413	-.550
330	1125	.151	.104	.546	-.300
330	1126	.128	.112	.494	-.251
330	1201	.146	.110	.550	-.239
330	1202	.165	.120	.594	-.221
330	1203	.198	.116	.577	-.173
330	1204	.163	.110	.655	-.218
330	1205	.156	.125	.588	-.344
330	1206	.205	.124	.738	-.194
330	1207	.218	.117	.615	-.248
330	1208	.251	.155	1.058	-.246

WD	TAP	CPMEAN	CPRMS	CPMAX	CPMIN
330	1209	.264	.148	.897	-.241
330	1210	.136	.127	.702	-.308
330	1211	.241	.128	.632	-.148
330	1212	.070	.119	.565	-.301
330	1213	-.126	.114	.258	-.543
330	1214	.144	.144	.696	-.297
330	1215	.304	.152	1.095	-.160
330	1216	.345	.147	1.019	-.085
330	1217	.141	.100	.537	-.230
330	1218	.137	.117	.542	-.323
330	1219	.026	.109	.403	-.319
330	1220	.187	.115	.658	-.192
330	1221	.363	.153	1.032	-.035
330	1222	.137	.112	.546	-.271
330	1223	.062	.116	.418	-.482
330	1224	.279	.144	.954	-.150
330	1225	.462	.202	1.442	-.084
330	1226	.324	.159	.962	-.113
330	1227	.187	.132	.645	-.182
330	1228	.056	.117	.433	-.313
330	1229	.125	.123	.527	-.668
330	1301	.134	.118	.527	-.248
330	1302	.150	.125	.550	-.233
330	1303	.166	.129	.625	-.251
330	1304	.098	.111	.441	-.275
330	1305	.230	.131	.687	-.229
330	1306	.191	.115	.647	-.156
330	1307	.172	.120	.642	-.304
330	1308	.107	.138	.583	-.478
330	1309	.102	.125	.598	-.381
330	1311	.243	.124	.725	-.166
330	1312	.242	.114	.680	-.089
330	1313	.182	.149	.770	-.274
330	1314	.140	.119	.543	-.375
330	1315	.306	.145	.957	-.132
330	1316	.325	.141	.897	-.074
330	1317	.170	.123	.641	-.229
330	1318	.232	.120	.607	-.151
330	1319	.203	.112	.651	-.177
330	1320	.181	.120	.631	-.256
330	1321	.158	.115	.628	-.182
330	1322	.195	.120	.630	-.256
330	1323	.317	.143	.897	-.103
330	1324	.208	.124	.623	-.205
330	1325	.129	.117	.537	-.335
330	1326	.196	.105	.579	-.141
330	1327	.174	.109	.531	-.167
330	1328	.209	.131	.659	-.217
330	1329	.420	.169	1.088	-.053
330	1330	.167	.159	.710	-.591

WD	TAP	CPMEAN	CPRMS	CPMAX	CPMIN
330	1331	.209	.142	.786	-.228
330	1401	.233	.133	.652	-.139
330	1402	.136	.117	.726	-.245
330	1403	.229	.141	.846	-.237
330	1404	.130	.124	.539	-.409
330	1405	.169	.131	.595	-.365
330	1406	.197	.119	.706	-.145
330	1407	.132	.112	.549	-.315
330	1408	.130	.149	.772	-.381
330	1409	-.026	.135	.452	-.470
330	1410	.085	.127	.506	-.354
330	1411	.136	.118	.663	-.320
330	1412	.151	.135	.688	-.254
330	1413	.125	.134	.595	-.374
330	1414	.034	.163	.610	-.534
330	1415	.078	.145	.561	-.386
330	1416	.151	.120	.541	-.188
330	1417	.152	.119	.569	-.174
330	1418	.157	.141	.781	-.244
330	1419	.148	.110	.673	-.193
330	1420	.167	.140	.725	-.270
330	1421	.160	.128	.577	-.308
330	1422	.122	.111	.504	-.351
330	1423	.152	.120	.572	-.238
330	1424	.174	.118	.695	-.209
330	1425	.171	.110	.604	-.141
330	1426	.146	.116	.599	-.299
330	1427	.146	.116	.614	-.206
330	1428	.154	.108	.554	-.193
330	1429	.179	.111	.575	-.184
330	1430	.181	.120	.700	-.256
330	1431	.199	.136	.807	-.193
330	1432	.177	.125	.582	-.231
330	1433	.189	.133	.668	-.203
330	1434	.158	.124	.567	-.208
330	1435	.143	.133	.625	-.253
330	1901	.129	.121	.501	-.316
330	1902	.233	.107	.645	-.226
330	1903	.340	.103	.686	.012
330	1904	.218	.119	.616	-.360
330	1905	.246	.112	.681	-.099
330	1906	.217	.124	.683	-.117
330	1907	.127	.130	.697	-.304
330	1908	.181	.141	.809	-.312
330	1909	.281	.148	.920	-.286
330	1910	.206	.144	.928	-.217
330	1911	.166	.124	.642	-.305
330	1912	.141	.138	.702	-.268
330	1913	.085	.147	.583	-.525
330	1914	.127	.115	.566	-.248
330	1915	.099	.116	.468	-.411
330	1916	.214	.150	.848	-.240
330	1917	.279	.146	.791	-.291
330	1918	.354	.169	1.003	-.299
330	1919	.273	.161	1.107	-.219
330	1920	.315	.167	1.009	-.099
330	1921	.136	.122	.642	-.204
330	1922	.150	.118	.613	-.271
330	1923	.162	.130	.525	-.256
330	1924	.251	.130	.798	-.097
330	1925	.275	.152	.981	-.181
330	1926	.120	.117	.494	-.255
330	1927	.162	.122	.596	-.297
330	1928	.205	.136	.647	-.202
330	1929	.244	.140	.840	-.200
330	1930	.335	.157	.947	-.104
330	1931	.302	.163	.889	-.307
330	1932	.171	.117	.686	-.140
330	1933	.165	.131	.685	-.373
330	1934	.191	.145	.650	-.328
330	1935	.214	.156	.725	-.745
330	1936	.297	.170	.968	-.204
330	1937	.329	.162	1.347	-.114
330	1938	.403	.188	1.327	-.092
330	1939	.263	.130	.807	-.135
330	1940	.219	.140	.766	-.284
330	1941	.228	.135	.699	-.277
330	1942	.312	.143	.899	-.099
330	1943	.384	.163	.922	-.063
330	1944	.424	.168	1.066	.073
330	1945	.210	.130	.635	-.169
330	1946	.271	.131	.762	-.110
330	1947	.349	.157	1.019	-.109
330	1948	.392	.171	1.388	-.081
330	1949	.399	.192	1.182	-.116
330	1950	.412	.170	1.084	-.118
330	1951	.183	.128	.653	-.242
330	1952	.236	.121	.653	-.121
330	1953	.281	.133	.787	-.186
330	1954	.375	.150	1.078	-.049
330	1955	.388	.178	1.236	-.279
330	1956	.340	.168	1.086	-.088
330	1957	.304	.140	.805	-.152
330	1958	.384	.170	1.068	-.177
330	1959	.410	.198	1.156	-.046
330	1960	.349	.173	1.207	-.093
330	1961	.356	.165	1.331	-.082
330	1962	.266	.140	.911	-.159
330	1963	.289	.122	.746	-.043
330	1964	.251	.143	.758	-.229
330	1965	.272	.130	.805	-.072
330	1966	.344	.145	.937	-.064
330	1967	.377	.173	1.125	-.279
330	1968	.360	.154	1.019	-.002
340	101	-.442	.227	.136	-2.003
340	102	-.432	.176	.004	-1.417
340	103	-.442	.197	.106	-2.204
340	104	.233	.199	.952	-.424
340	105	.192	.168	.758	-.428
340	106	.048	.165	.597	-.629
340	107	.009	.158	.538	-.534
340	108	.028	.149	.577	-.493
340	109	-.032	.139	.576	-.462
340	110	.064	.146	.629	-.403
340	111	.105	.156	.645	-.430
340	112	.219	.174	.726	-.647
340	113	.232	.206	1.025	-.530
340	114	.522	.223	1.305	-.226
340	115	.498	.215	1.303	-.183
340	116	.491	.193	1.151	-.170
340	117	.506	.186	1.110	-.003
340	118	.495	.200	1.219	-.240
340	119	.483	.202	1.240	-.154
340	120	.463	.189	1.171	-.208
340	121	.516	.195	1.076	-.141
340	122	.468	.209	1.147	-.118
340	123	.500	.208	1.199	-.231
340	124	.547	.214	1.314	-.109
340	125	.538	.210	1.378	-.079
340	126	.560	.194	1.282	-.013
340	127	.568	.197	1.274	-.045
340	128	.601	.209	1.298	-.071
340	129	.567	.204	1.294	-.022
340	130	.566	.210	1.267	-.058
340	131	.577	.194	1.249	-.006
340	132	.571	.211	1.431	-.100
340	133	.596	.206	1.180	-.257
340	134	.493	.196	1.258	-.036
340	135	.492	.198	1.088	-.081
340	136	.502	.192	1.115	-.087
340	137	.513	.185	1.168	-.072
340	138	.547	.195	1.184	-.018
340	139	.525	.203	1.229	-.033
340	140	.578	.207	1.318	.020
340	141	.514	.192	1.247	.003
340	142	.482	.204	1.218	-.090
340	143	.478	.200	1.240	-.044
340	144	.364	.193	1.083	-.345
340	145	.395	.185	1.265	-.249
340	146	.424	.188	1.218	-.110

WD	TAP	CPMEAN	CPRMS	CPMAX	CPMIN	WD	TAP	CPMEAN	CPRMS	CPMAX	CPMIN	WD	TAP	CPMEAN	CPRMS	CPMAX	CPMIN
340	147	.425	.184	1.103	-.098	340	210	-.250	.144	.296	-.729	340	260	-.261	.164	.294	-.973
340	148	.426	.174	1.038	-.103	340	211	-.261	.145	.282	-.855	340	261	-.215	.140	.272	-1.006
340	149	.433	.167	.960	-.054	340	212	-.287	.152	.206	-.952	340	262	-.239	.150	.249	-.879
340	150	.438	.184	1.143	-.105	340	213	-.277	.157	.175	-1.001	340	263	-.241	.132	.169	-.691
340	151	.406	.187	1.128	-.210	340	214	-.292	.154	.132	-1.000	340	264	-.256	.129	.099	-.764
340	152	.394	.177	1.137	-.190	340	215	-.260	.148	.206	-.807	340	265	-.251	.147	.221	-.779
340	153	.387	.191	.945	-.207	340	216	-.260	.149	.161	-.864	340	266	-.255	.172	.191	-1.051
340	154	.204	.156	.772	-.356	340	217	-.241	.134	.206	-.911	340	267	-.230	.150	.277	-.828
340	155	.275	.157	.910	-.179	340	218	-.238	.133	.166	-.751	340	268	-.223	.153	.264	-.851
340	156	.302	.159	.875	-.278	340	219	-.236	.151	.175	-1.222	340	269	-.243	.154	.308	-.818
340	157	.340	.164	1.031	-.092	340	220	-.320	.175	.202	-.952	340	270	-.240	.139	.151	-.806
340	158	.335	.170	1.264	-.186	340	221	-.285	.154	.240	-.792	340	271	-.230	.134	.177	-.746
340	159	.313	.145	.951	-.125	340	222	-.278	.146	.120	-.825	340	272	-.348	.196	.180	-1.742
340	160	.341	.164	.859	-.240	340	223	-.285	.147	.168	-1.039	340	301	-.324	.180	.281	-1.392
340	161	.316	.174	.971	-.175	340	224	-.263	.145	.206	-.848	340	302	-.310	.164	.177	-1.114
340	162	.291	.173	1.041	-.264	340	225	-.252	.139	.177	-.776	340	303	-.329	.181	.110	-1.143
340	163	.281	.162	.913	-.437	340	226	-.240	.145	.192	-.922	340	304	-.314	.165	.129	-1.119
340	164	.112	.147	.684	-.527	340	227	-.254	.140	.204	-.701	340	305	-.314	.169	.219	-1.323
340	165	.174	.144	.686	-.304	340	228	-.320	.171	.118	-1.127	340	306	-.325	.173	.184	-1.199
340	166	.121	.137	.628	-.350	340	229	-.299	.149	.166	-.866	340	307	-.340	.178	.242	-1.127
340	167	.209	.129	.639	-.211	340	230	-.299	.155	.195	-.924	340	308	-.322	.170	.204	-1.136
340	168	.289	.158	.922	-.190	340	231	-.297	.167	.141	-1.199	340	309	-.340	.186	.148	-1.392
340	169	.300	.141	.830	-.141	340	232	-.295	.164	.177	-1.071	340	310	-.309	.158	.191	-.926
340	170	.264	.135	.709	-.219	340	233	-.282	.154	.179	-1.114	340	311	-.296	.165	.209	-1.333
340	171	.172	.123	.601	-.266	340	234	-.271	.156	.183	-.947	340	312	-.287	.165	.135	-1.094
340	172	.122	.128	.606	-.258	340	235	-.255	.157	.213	-.902	340	313	-.341	.172	.139	-1.361
340	173	.109	.128	.613	-.338	340	236	-.319	.190	.233	-1.273	340	314	-.334	.177	.211	-1.202
340	174	-.110	.124	.540	-.604	340	237	-.304	.166	.247	-.972	340	315	-.343	.186	.134	-1.491
340	175	.079	.117	.443	-.384	340	238	-.300	.165	.179	-.999	340	316	-.256	.145	.111	-.989
340	176	.220	.140	.758	-.293	340	239	-.313	.166	.188	-.996	340	317	-.291	.143	.117	-.978
340	177	.162	.126	.623	-.345	340	240	-.295	.181	.165	-1.096	340	318	-.295	.145	.148	-.821
340	178	-.085	.157	.383	-.843	340	241	-.293	.155	.201	-1.071	340	319	-.363	.152	.187	-.983
340	179	-.189	.166	.349	-.833	340	242	-.267	.152	.148	-1.274	340	320	-.337	.168	.145	-1.237
340	180	.078	.125	.453	-.399	340	243	-.284	.169	.145	-1.658	340	321	-.350	.166	.202	-1.335
340	181	.333	.168	.952	-.182	340	244	-.297	.195	.202	-1.116	340	322	-.311	.151	.266	-.878
340	182	.285	.148	.842	-.178	340	245	-.252	.179	.379	-1.141	340	323	-.294	.152	.172	-.906
340	183	.102	.148	.626	-.420	340	246	-.271	.160	.329	-.863	340	324	-.307	.153	.237	-.982
340	184	.124	.138	.653	-.257	340	247	-.311	.159	.147	-1.033	340	325	-.392	.158	.060	-1.147
340	185	.409	.189	1.326	-.125	340	248	-.334	.188	.199	-1.545	340	326	-.375	.171	.089	-1.050
340	186	.356	.172	1.389	-.121	340	249	-.342	.201	.182	-1.318	340	327	-.382	.184	.141	-1.234
340	187	.204	.139	.765	-.185	340	250	-.333	.175	.139	-1.385	340	328	-.324	.154	.174	-.924
340	201	-.290	.184	.280	-1.595	340	251	-.310	.165	.159	-1.285	340	329	-.333	.145	.202	-.956
340	202	-.380	.157	.143	-1.094	340	252	-.267	.168	.212	-.956	340	330	-.339	.159	.178	-1.112
340	203	-.268	.187	.541	-1.096	340	253	-.257	.155	.231	-.953	340	331	-.388	.172	.078	-1.377
340	204	-.287	.169	.393	-1.301	340	254	-.255	.162	.253	-.912	340	332	-.361	.176	.198	-1.022
340	205	-.266	.158	.197	-.918	340	255	-.260	.148	.170	-.768	340	333	-.367	.188	.134	-1.416
340	206	-.270	.148	.251	-.976	340	256	-.261	.156	.176	-.888	340	334	-.313	.119	-.041	-.744
340	207	-.278	.181	.291	-1.222	340	257	-.302	.165	.200	-1.077	340	335	-.323	.186	.204	-1.241
340	208	-.279	.176	.258	-1.291	340	258	-.379	.222	.165	-1.653	340	336	-.343	.175	.176	-.941
340	209	-.261	.150	.224	-1.533	340	259	-.392	.238	.183	-1.515	340	337	-.328	.197	.205	-1.197

WD	TAP	CPMEAN	CPRMS	CPMAX	CPMIN	WD	TAP	CPMEAN	CPRMS	CPMAX	CPMIN	WD	TAP	CPMEAN	CPRMS	CPMAX	CPMIN
340	338	-.339	.208	.238	-1.578	340	430	-.408	.164	.199	-1.227	340	508	.090	.168	.592	-.554
340	339	-.297	.194	.382	-1.090	340	431	-.438	.174	.092	-1.323	340	509	.342	.292	1.243	-.637
340	340	-.306	.184	.244	-1.120	340	432	-.458	.191	.051	-1.458	340	510	.344	.275	1.120	-.753
340	341	-.283	.178	.237	-.999	340	433	-.417	.182	.067	-1.119	340	511	.199	.157	.753	-.380
340	342	-.303	.182	.237	-1.064	340	434	-.401	.181	.125	-1.152	340	512	.027	.161	.561	-.506
340	343	-.249	.191	.279	-1.234	340	435	-.418	.195	.136	-1.277	340	513	.257	.272	1.037	-.856
340	344	-.181	.167	.288	-.973	340	436	-.460	.180	.095	-1.373	340	514	.280	.274	1.271	-.651
340	345	-.221	.163	.190	-.921	340	437	-.466	.171	.067	-1.403	340	515	.168	.177	.913	-.500
340	346	-.224	.168	.227	-1.025	340	438	-.483	.200	.112	-1.299	340	516	-.011	.157	.638	-.500
340	347	-.225	.158	.257	-1.010	340	439	-.494	.206	.282	-1.833	340	517	.223	.301	1.203	-1.175
340	348	-.230	.157	.229	-.939	340	440	-.464	.206	.290	-1.306	340	518	.255	.265	.978	-.906
340	349	-.173	.138	.227	-.634	340	441	-.426	.188	.199	-1.386	340	519	.128	.177	.834	-.555
340	350	-.157	.145	.257	-.838	340	442	-.373	.173	.186	-1.039	340	520	-.066	.156	.448	-.775
340	351	-.159	.151	.281	-.768	340	443	-.402	.188	.104	-1.284	340	521	.156	.268	.861	-.995
340	352	-.175	.159	.288	-1.056	340	444	-.498	.227	.074	-2.096	340	522	.228	.225	.996	-.832
340	353	-.175	.142	.228	-1.026	340	445	-.518	.221	.026	-1.808	340	523	.077	.164	.620	-.577
340	354	-.201	.153	.276	-.979	340	446	-.520	.249	.085	-2.426	340	524	-.044	.159	.516	-.649
340	355	-.141	.141	.315	-.610	340	447	-.425	.220	.227	-1.373	340	525	-.046	.203	.659	-1.009
340	356	-.140	.128	.258	-.652	340	448	-.337	.179	.155	-1.181	340	526	-.010	.169	.535	-1.137
340	357	-.161	.147	.308	-1.199	340	449	-.298	.172	.301	-1.423	340	527	.026	.158	.583	-.584
340	358	-.148	.140	.372	-.728	340	450	-.246	.156	.223	-.897	340	528	-.045	.157	.509	-.662
340	401	-.376	.190	.403	-1.230	340	451	-.273	.168	.219	-.816	340	529	-.160	.169	.514	-.775
340	402	-.374	.182	.371	-1.177	340	452	-.604	.357	.120	-3.183	340	530	-.103	.163	.451	-.631
340	403	-.389	.228	.307	-1.926	340	453	-.400	.249	.170	-1.672	340	531	-.310	.218	.379	-1.135
340	404	-.318	.163	.134	-1.000	340	454	-.272	.187	.267	-1.085	340	532	-.138	.150	.390	-.733
340	405	-.330	.162	.080	-.891	340	455	-.272	.169	.194	-.928	340	533	.086	.144	.625	-.386
340	406	-.366	.192	.294	-1.143	340	456	-.289	.165	.194	-1.140	340	534	-.110	.135	.315	-.616
340	407	-.366	.205	.242	-1.130	340	457	-.205	.140	.247	-.819	340	601	.064	.151	.597	-.473
340	408	-.370	.204	.320	-1.558	340	458	-.232	.157	.221	-.830	340	602	.180	.163	.972	-.446
340	409	-.353	.178	.179	-1.178	340	459	-.229	.163	.262	-.849	340	603	.317	.202	.992	-.875
340	410	-.357	.204	.156	-1.238	340	460	-.255	.175	.229	-1.142	340	604	.321	.270	1.049	-1.422
340	411	-.373	.194	.201	-1.362	340	461	-.249	.156	.266	-.880	340	605	.069	.159	.581	-.478
340	412	-.308	.162	.258	-.864	340	462	-.232	.155	.307	-.753	340	606	.229	.172	1.002	-.349
340	413	-.299	.151	.151	-.937	340	463	-.213	.142	.275	-.746	340	607	.391	.248	1.177	-.513
340	414	-.323	.161	.081	-1.078	340	464	-.207	.145	.380	-.944	340	608	.420	.289	1.388	-.579
340	415	-.346	.185	.144	-1.094	340	465	-.204	.146	.234	-1.066	340	609	.014	.142	.522	-.689
340	416	-.340	.177	.179	-1.338	340	466	-.241	.157	.258	-.845	340	610	.178	.160	.805	-.554
340	417	-.337	.171	.153	-1.116	340	467	-.238	.162	.187	-.961	340	611	.233	.294	1.033	-1.310
340	418	-.360	.187	.107	-1.258	340	468	-.231	.144	.149	-.714	340	612	.265	.333	1.118	-.991
340	419	-.378	.199	.151	-1.314	340	469	-.217	.135	.213	-.704	340	613	-.013	.145	.527	-.622
340	420	-.299	.152	.192	-.832	340	470	-.211	.153	.231	-.773	340	614	.119	.163	.637	-.599
340	421	-.319	.147	.130	-.782	340	471	-.200	.139	.300	-.751	340	615	.157	.292	.994	-1.138
340	422	-.337	.162	.108	-.923	340	472	-.540	.330	.079	-2.858	340	616	.091	.318	1.136	-.980
340	423	-.378	.173	.192	-.976	340	501	.364	.241	1.070	-.694	340	617	-.072	.157	.398	-.845
340	424	-.391	.164	.169	-1.039	340	502	.324	.196	1.163	-.830	340	618	.016	.168	.605	-.786
340	425	-.376	.157	.070	-.931	340	503	.198	.167	.736	-.336	340	619	-.026	.333	1.211	-1.027
340	426	-.424	.196	.162	-1.345	340	504	.051	.163	.618	-.500	340	620	-.067	.316	.846	-1.329
340	427	-.444	.206	.197	-1.384	340	505	.415	.296	1.225	-.876	340	621	-.130	.157	.425	-.793
340	428	-.371	.162	.140	-.895	340	506	.453	.240	1.144	-.642	340	622	-.074	.173	.677	-.881
340	429	-.410	.175	.214	-1.310	340	507	.268	.182	.921	-.233	340	623	-.173	.296	.700	-1.299

WD	TAP	CPMEAN	CPRMS	CPMAX	CPMIN	WD	TAP	CPMEAN	CPRMS	CPMAX	CPMIN	WD	TAP	CPMEAN	CPRMS	CPMAX	CPMIN
340	624	-.194	.282	.577	-1.431	340	1104	-.024	.117	.352	-.513	340	1228	.064	.120	.529	-.331
340	625	-.191	.141	.246	-.787	340	1105	-.002	.114	.412	-.438	340	1229	.123	.145	.587	-.582
340	626	-.146	.149	.381	-.834	340	1106	-.081	.127	.356	-.559	340	1301	.113	.108	.431	-.387
340	627	-.259	.180	.309	-1.197	340	1107	.069	.143	.557	-.598	340	1302	.105	.133	.607	-.447
340	628	-.243	.185	.340	-1.380	340	1108	.094	.134	.511	-.391	340	1303	.117	.135	.641	-.482
340	629	-.219	.154	.313	-.843	340	1109	.105	.126	.532	-.314	340	1304	.111	.119	.478	-.466
340	630	-.288	.148	.254	-.936	340	1110	.141	.114	.575	-.245	340	1305	.237	.137	.669	-.192
340	631	-.291	.153	.179	-.926	340	1111	.142	.130	.636	-.277	340	1306	.211	.134	.694	-.305
340	632	-.380	.167	.087	-1.001	340	1112	-.090	.151	.689	-.641	340	1307	.185	.130	.651	-.244
340	633	.074	.133	.522	-.422	340	1113	.035	.145	.645	-.518	340	1308	.104	.130	.602	-.372
340	634	-.354	.212	.632	-1.127	340	1114	.091	.138	.518	-.420	340	1309	.087	.136	.573	-.393
340	801	-.189	.133	.189	-.793	340	1115	.136	.128	.539	-.288	340	1311	.295	.146	.848	-.213
340	802	-.171	.147	.306	-1.023	340	1116	.095	.123	.457	-.570	340	1312	.250	.153	.819	-.272
340	803	.247	.130	.790	-.195	340	1117	.084	.117	.493	-.245	340	1313	.156	.140	.751	-.258
340	804	-.232	.140	.248	-.754	340	1118	.048	.118	.438	-.379	340	1314	.122	.126	.554	-.328
340	805	-.134	.137	.403	-.698	340	1119	-.009	.130	.345	-.804	340	1315	.354	.156	1.015	-.107
340	806	-.285	.149	.294	-.856	340	1120	-.139	.162	.611	-.811	340	1316	.354	.156	.995	-.152
340	807	-.278	.154	.169	-1.065	340	1121	.069	.125	.532	-.368	340	1317	.158	.123	.575	-.265
340	808	-.291	.155	.208	-1.274	340	1122	.067	.128	.485	-.326	340	1318	.260	.143	.856	-.140
340	809	-.301	.141	.196	-.781	340	1123	.067	.124	.514	-.323	340	1319	.212	.133	.658	-.187
340	810	-.165	.176	.363	-.870	340	1124	-.042	.145	.415	-.590	340	1320	.179	.117	.609	-.201
340	811	-.138	.137	.251	-.601	340	1125	.158	.126	.552	-.332	340	1321	.146	.128	.582	-.260
340	812	-.149	.163	.396	-.809	340	1126	.129	.118	.519	-.333	340	1322	.228	.129	.688	-.199
340	813	-.193	.160	.306	-.766	340	1201	.136	.112	.543	-.269	340	1323	.363	.154	1.024	-.092
340	814	-.172	.178	.543	-.878	340	1202	.121	.132	.627	-.492	340	1324	.205	.129	.706	-.187
340	815	-.240	.164	.328	-.990	340	1203	.177	.121	.670	-.239	340	1325	.141	.130	.667	-.301
340	901	-.348	.207	.239	-1.638	340	1204	.159	.122	.581	-.462	340	1326	.229	.121	.697	-.115
340	902	-.336	.190	.210	-1.353	340	1205	.115	.134	.630	-.599	340	1327	.199	.129	.658	-.194
340	903	-.333	.175	.183	-1.057	340	1206	.208	.135	.891	-.161	340	1328	.211	.146	.740	-.233
340	904	-.206	.192	.404	-1.100	340	1207	.226	.126	.638	-.172	340	1329	.452	.202	1.455	-.072
340	905	-.319	.172	.357	-.987	340	1208	.273	.156	.841	-.208	340	1330	.105	.181	.656	-.597
340	906	-.366	.191	.163	-1.534	340	1209	.266	.164	.952	-.179	340	1331	.190	.131	.669	-.199
340	907	-.394	.187	.140	-1.392	340	1210	.123	.123	.702	-.276	340	1401	.167	.129	.784	-.331
340	908	-.395	.160	.077	-1.068	340	1211	.209	.120	.696	-.151	340	1402	.106	.127	.489	-.496
340	909	-.372	.174	.210	-1.304	340	1212	.076	.126	.562	-.343	340	1403	.166	.129	.722	-.279
340	910	-.442	.223	.144	-1.670	340	1213	-.120	.116	.255	-.568	340	1404	.111	.117	.607	-.296
340	911	-.398	.185	.192	-1.166	340	1214	.093	.145	.607	-.461	340	1405	.146	.144	.629	-.517
340	912	-.369	.181	.099	-1.261	340	1215	.295	.137	.920	-.080	340	1406	.157	.125	.591	-.276
340	913	-.466	.235	.106	-1.801	340	1216	.364	.157	.932	-.113	340	1407	.129	.123	.589	-.294
340	914	-.418	.176	.041	-1.113	340	1217	.148	.110	.529	-.188	340	1408	.099	.130	.666	-.325
340	915	-.482	.245	.145	-2.100	340	1218	.162	.119	.555	-.247	340	1409	-.053	.135	.413	-.590
340	916	-.397	.204	.321	-1.324	340	1219	.033	.110	.339	-.317	340	1410	.052	.133	.597	-.552
340	917	-.532	.271	.316	-1.731	340	1220	.200	.118	.592	-.184	340	1411	.104	.120	.553	-.279
340	918	-.430	.182	.142	-1.333	340	1221	.342	.154	1.006	-.110	340	1412	.095	.114	.500	-.286
340	919	-.465	.223	.138	-1.851	340	1222	.149	.114	.644	-.186	340	1413	.105	.117	.612	-.276
340	920	-.395	.194	.153	-1.333	340	1223	.047	.110	.460	-.404	340	1414	.007	.149	.466	-.524
340	921	-.460	.188	.079	-1.233	340	1224	.275	.145	.968	-.087	340	1415	.042	.142	.546	-.435
340	1101	.177	.120	.625	-.393	340	1225	.463	.180	1.231	-.031	340	1416	.121	.112	.541	-.274
340	1102	.161	.130	.619	-.521	340	1226	.321	.155	1.044	-.138	340	1417	.136	.122	.541	-.236
340	1103	.183	.141	.729	-.320	340	1227	.204	.122	.722	-.270	340	1418	.123	.130	.605	-.268

WD	TAP	CPMEAN	CPRMS	CPMAX	CPMIN	WD	TAP	CPMEAN	CPRMS	CPMAX	CPMIN	WD	TAP	CPMEAN	CPRMS	CPMAX	CPMIN
340	1419	.122	.126	.550	-.292	340	1934	.194	.139	.667	-.475	350	116	.476	.210	1.208	-.218
340	1420	.136	.132	.633	-.246	340	1935	.246	.150	.728	-.242	350	117	.471	.201	1.154	-.088
340	1421	.143	.132	.531	-.369	340	1936	.325	.172	.918	-.232	350	118	.472	.189	1.143	-.081
340	1422	.104	.108	.479	-.482	340	1937	.373	.184	1.086	-.143	350	119	.512	.202	1.167	-.131
340	1423	.116	.113	.502	-.323	340	1938	.406	.188	1.257	-.086	350	120	.524	.192	1.230	-.094
340	1424	.139	.122	.636	-.225	340	1939	.274	.143	.958	-.156	350	121	.539	.209	1.289	-.075
340	1425	.143	.116	.588	-.260	340	1940	.169	.131	.555	-.345	350	122	.576	.202	1.288	-.053
340	1426	.145	.122	.608	-.233	340	1941	.225	.134	.729	-.273	350	123	.536	.218	1.393	-.205
340	1427	.128	.115	.542	-.339	340	1942	.322	.142	.849	-.109	350	124	.533	.206	1.232	-.146
340	1428	.128	.109	.505	-.215	340	1943	.368	.190	1.107	-.081	350	125	.531	.206	1.367	-.085
340	1429	.145	.111	.598	-.253	340	1944	.441	.175	1.227	-.023	350	126	.605	.229	1.369	-.180
340	1430	.158	.120	.611	-.238	340	1945	.216	.127	.654	-.256	350	127	.605	.221	1.491	.067
340	1431	.140	.116	.621	-.288	340	1946	.261	.130	.721	-.238	350	128	.590	.195	1.306	.059
340	1432	.147	.116	.581	-.208	340	1947	.369	.157	1.045	-.071	350	129	.578	.220	1.392	.001
340	1433	.162	.130	.652	-.253	340	1948	.446	.186	1.406	-.020	350	130	.597	.210	1.268	-.059
340	1434	.123	.123	.573	-.323	340	1949	.448	.211	1.361	-.144	350	131	.617	.214	1.294	-.027
340	1435	.097	.132	.487	-.442	340	1950	.473	.211	1.359	-.062	350	132	.569	.219	1.386	-.042
340	1901	.108	.122	.483	-.295	340	1951	.167	.122	.692	-.218	350	133	.551	.242	1.678	-.283
340	1902	.239	.110	.624	-.357	340	1952	.233	.116	.716	-.152	350	134	.489	.226	1.279	-.242
340	1903	.369	.092	.730	.031	340	1953	.269	.125	.744	-.120	350	135	.465	.203	1.141	-.094
340	1904	.176	.115	.546	-.354	340	1954	.397	.161	.918	-.128	350	136	.497	.204	1.102	-.113
340	1905	.260	.115	.663	-.137	340	1955	.397	.185	1.318	-.072	350	137	.506	.220	1.193	-.105
340	1906	.244	.126	.726	-.196	340	1956	.372	.170	1.102	-.065	350	138	.533	.196	1.311	-.023
340	1907	.112	.122	.611	-.262	340	1957	.304	.144	.798	-.151	350	139	.473	.209	1.250	-.077
340	1908	.191	.132	.692	-.269	340	1958	.415	.173	1.139	-.123	350	140	.504	.186	1.111	-.060
340	1909	.301	.170	.946	-.277	340	1959	.456	.186	1.192	-.006	350	141	.534	.201	1.291	-.045
340	1910	.226	.146	.829	-.191	340	1960	.386	.178	1.146	-.077	350	142	.470	.206	1.165	-.148
340	1911	.154	.127	.594	-.257	340	1961	.409	.189	1.118	-.134	350	143	.455	.232	1.352	-.249
340	1912	.148	.151	.795	-.424	340	1962	.272	.134	1.023	-.165	350	144	.295	.186	.858	-.289
340	1913	.049	.148	.687	-.389	340	1963	.318	.147	.918	-.129	350	145	.340	.191	1.053	-.476
340	1914	.110	.110	.604	-.243	340	1964	.206	.134	.702	-.213	350	146	.379	.182	1.117	-.225
340	1915	.089	.114	.428	-.365	340	1965	.260	.132	.875	-.128	350	147	.400	.177	1.010	-.145
340	1916	.171	.143	.663	-.301	340	1966	.357	.149	.946	-.067	350	148	.376	.174	1.004	-.148
340	1917	.280	.144	.889	-.129	340	1967	.371	.194	1.192	-.146	350	149	.402	.183	1.012	-.266
340	1918	.392	.177	1.197	-.113	340	1968	.379	.163	1.306	-.079	350	150	.391	.166	1.139	-.055
340	1919	.259	.174	1.081	-.199	350	101	-.429	.193	.136	-1.522	350	151	.382	.173	1.192	-.147
340	1920	.322	.173	1.169	-.165	350	102	-.395	.177	.142	-1.190	350	152	.343	.173	1.148	-.167
340	1921	.141	.117	.565	-.233	350	103	-.440	.203	.075	-1.474	350	153	.293	.179	1.049	-.359
340	1922	.142	.122	.633	-.257	350	104	.115	.195	.725	-.597	350	154	.204	.162	.855	-.425
340	1923	.149	.115	.580	-.262	350	105	.142	.195	.855	-.586	350	155	.225	.156	.823	-.283
340	1924	.253	.120	.671	-.127	350	106	.096	.172	.853	-.560	350	156	.279	.169	1.031	-.244
340	1925	.311	.166	1.148	-.187	350	107	.042	.164	.602	-.560	350	157	.309	.149	.849	-.191
340	1926	.152	.123	.737	-.196	350	108	.056	.163	.686	-.426	350	158	.306	.148	.868	-.197
340	1927	.158	.117	.616	-.247	350	109	.016	.157	.547	-.623	350	159	.309	.157	.915	-.126
340	1928	.181	.123	.552	-.232	350	110	.091	.157	.612	-.413	350	160	.303	.147	1.040	-.266
340	1929	.246	.130	.795	-.255	350	111	.119	.154	.688	-.504	350	161	.272	.157	.875	-.233
340	1930	.360	.167	.920	-.169	350	112	.266	.181	.900	-.276	350	162	.253	.163	1.042	-.278
340	1931	.310	.160	1.002	-.179	350	113	.333	.209	1.000	-.397	350	163	.194	.153	.669	-.467
340	1932	.191	.113	.563	-.141	350	114	.436	.211	1.288	-.267	350	164	.111	.138	.858	-.371
340	1933	.156	.135	.637	-.396	350	115	.428	.208	1.072	-.250	350	165	.163	.139	.632	-.266

WD	TAP	CPMEAN	CPRMS	CPMAX	CPMIN	WD	TAP	CPMEAN	CPRMS	CPMAX	CPMIN	WD	TAP	CPMEAN	CPRMS	CPMAX	CPMIN
350	166	.134	.130	.581	-.433	350	229	-.324	.178	.347	-.934	350	307	-.291	.150	.147	-1.027
350	167	.202	.139	.628	-.240	350	230	-.347	.180	.515	-1.140	350	308	-.277	.152	.172	-1.076
350	168	.316	.145	.843	-.130	350	231	-.379	.194	.267	-1.226	350	309	-.309	.187	.149	-1.216
350	169	.280	.150	1.036	-.156	350	232	-.375	.189	.288	-1.021	350	310	-.316	.177	.145	-.998
350	170	.244	.127	.737	-.167	350	233	-.369	.188	.092	-1.094	350	311	-.276	.163	.213	-1.044
350	171	.173	.122	.623	-.193	350	234	-.340	.171	.157	-1.016	350	312	-.322	.198	.321	-1.503
350	172	.123	.134	.726	-.290	350	235	-.327	.159	.113	-.950	350	313	-.305	.155	.200	-.868
350	173	.079	.124	.543	-.409	350	236	-.299	.188	.239	-1.165	350	314	-.279	.149	.123	-.911
350	174	-.088	.121	.342	-.538	350	237	-.266	.177	.327	-1.170	350	315	-.304	.167	.185	-1.059
350	175	.091	.127	.571	-.330	350	238	-.282	.162	.185	-.984	350	316	-.273	.155	.153	-1.505
350	176	.208	.144	.773	-.186	350	239	-.360	.202	.454	-1.269	350	317	-.292	.158	.147	-1.110
350	177	.150	.131	.543	-.367	350	240	-.418	.203	.176	-1.271	350	318	-.323	.178	.174	-1.218
350	178	-.073	.175	.443	-1.016	350	241	-.404	.224	.144	-1.738	350	319	-.309	.147	.098	-.919
350	179	-.162	.185	.463	-.810	350	242	-.368	.180	.176	-1.466	350	320	-.307	.146	.187	-1.108
350	180	.071	.151	.571	-.437	350	243	-.365	.195	.182	-1.308	350	321	-.317	.152	.144	-.959
350	181	.340	.176	1.057	-.118	350	244	-.215	.160	.249	-.939	350	322	-.330	.156	.151	-1.172
350	182	.283	.144	1.151	-.086	350	245	-.208	.161	.316	-1.150	350	323	-.278	.150	.223	-.891
350	183	.070	.142	.539	-.435	350	246	-.247	.167	.281	-.913	350	324	-.314	.163	.185	-.864
350	184	.122	.136	.673	-.254	350	247	-.302	.164	.220	-1.146	350	325	-.336	.161	.166	-.921
350	185	.425	.196	1.306	-.104	350	248	-.424	.207	.215	-1.301	350	326	-.325	.153	.100	-.934
350	186	.360	.176	1.203	-.137	350	249	-.430	.234	.110	-1.638	350	327	-.334	.179	.183	-1.157
350	187	.189	.145	.830	-.304	350	250	-.424	.243	.217	-2.080	350	328	-.291	.158	.316	-.870
350	201	-.312	.204	.509	-1.330	350	251	-.415	.208	.130	-1.312	350	329	-.296	.145	.128	-.842
350	202	-.354	.180	.289	-1.176	350	252	-.212	.150	.266	-1.043	350	330	-.312	.162	.248	-.927
350	203	-.323	.192	.645	-.995	350	253	-.202	.149	.276	-.993	350	331	-.315	.168	.193	-1.189
350	204	-.294	.189	.314	-1.014	350	254	-.213	.149	.300	-.777	350	332	-.275	.179	.248	-1.490
350	205	-.282	.185	.401	-1.267	350	255	-.260	.159	.395	-.853	350	333	-.287	.169	.227	-1.008
350	206	-.321	.203	.346	-1.118	350	256	-.230	.150	.244	-.840	350	334	-.267	.110	.063	-.592
350	207	-.322	.193	.353	-1.127	350	257	-.349	.210	.249	-1.477	350	335	-.276	.158	.219	-1.036
350	208	-.372	.213	.310	-1.472	350	258	-.465	.250	.202	-1.842	350	336	-.310	.184	.376	-1.014
350	209	-.368	.207	.204	-1.561	350	259	-.524	.324	.334	-2.568	350	337	-.220	.182	.236	-1.227
350	210	-.347	.199	.184	-1.595	350	260	-.196	.150	.259	-.948	350	338	-.209	.168	.348	-.902
350	211	-.325	.181	.195	-1.170	350	261	-.197	.145	.271	-.881	350	339	-.192	.149	.293	-1.004
350	212	-.314	.206	.267	-1.794	350	262	-.208	.132	.182	-.813	350	340	-.212	.160	.266	-.989
350	213	-.270	.171	.381	-1.896	350	263	-.232	.149	.236	-.777	350	341	-.228	.166	.294	-.995
350	214	-.301	.177	.283	-1.008	350	264	-.240	.144	.300	-.848	350	342	-.234	.162	.259	-.968
350	215	-.327	.184	.271	-1.042	350	265	-.222	.142	.161	-.723	350	343	-.152	.142	.257	-.773
350	216	-.339	.178	.193	-1.135	350	266	-.210	.137	.245	-.765	350	344	-.127	.120	.283	-.618
350	217	-.345	.192	.161	-1.073	350	267	-.209	.151	.246	-.855	350	345	-.147	.128	.436	-.613
350	218	-.317	.177	.217	-.969	350	268	-.201	.141	.299	-.704	350	346	-.162	.145	.291	-.888
350	219	-.318	.183	.206	-1.105	350	269	-.205	.144	.391	-.771	350	347	-.169	.145	.285	-.817
350	220	-.331	.178	.238	-1.045	350	270	-.229	.151	.206	-.897	350	348	-.204	.152	.447	-.718
350	221	-.318	.169	.234	-.950	350	271	-.226	.149	.238	-.829	350	349	-.123	.119	.280	-.660
350	222	-.291	.170	.295	-.954	350	272	-.483	.266	.120	-1.768	350	350	-.122	.135	.267	-.649
350	223	-.353	.183	.247	-1.027	350	301	-.300	.168	.273	-1.065	350	351	-.119	.129	.514	-.670
350	224	-.340	.184	.215	-1.027	350	302	-.326	.179	.193	-1.220	350	352	-.140	.131	.274	-.940
350	225	-.326	.163	.152	-1.019	350	303	-.308	.181	.216	-1.346	350	353	-.138	.128	.262	-1.196
350	226	-.321	.167	.204	-.954	350	304	-.320	.196	.224	-1.170	350	354	-.155	.130	.299	-.611
350	227	-.312	.156	.273	-.919	350	305	-.308	.173	.287	-1.180	350	355	-.105	.128	.290	-.612
350	228	-.318	.180	.206	-1.077	350	306	-.308	.180	.266	-1.176	350	356	-.108	.120	.342	-.516

WD	TAP	CPMEAN	CPRMS	CPMAX	CPMIN
350	357	-.126	.125	.411	-.535
350	358	-.121	.131	.306	-.642
350	401	-.336	.186	.829	-.956
350	402	-.373	.182	.195	-1.472
350	403	-.325	.188	.233	-1.686
350	404	-.272	.148	.161	-.807
350	405	-.265	.147	.199	-.849
350	406	-.282	.156	.222	-.893
350	407	-.305	.166	.184	-1.170
350	408	-.313	.149	.157	-1.191
350	409	-.317	.157	.224	-.998
350	410	-.339	.175	.199	-1.099
350	411	-.322	.180	.140	-1.376
350	412	-.250	.133	.140	-.743
350	413	-.241	.130	.241	-.764
350	414	-.265	.144	.241	-.749
350	415	-.269	.142	.258	-.981
350	416	-.303	.156	.175	-.884
350	417	-.292	.144	.146	-.912
350	418	-.340	.169	.197	-.977
350	419	-.331	.173	.173	-1.085
350	420	-.283	.141	.189	-.819
350	421	-.288	.141	.189	-.783
350	422	-.312	.141	.111	-.868
350	423	-.319	.167	.319	-.966
350	424	-.342	.153	.142	-.895
350	425	-.339	.159	.167	-.929
350	426	-.345	.161	.266	-.935
350	427	-.369	.184	.239	-1.099
350	428	-.336	.163	.147	-.966
350	429	-.355	.157	.098	-1.036
350	430	-.353	.165	.163	-.991
350	431	-.384	.175	.176	-1.170
350	432	-.394	.191	.109	-1.147
350	433	-.372	.156	.132	-.910
350	434	-.370	.171	.187	-1.191
350	435	-.377	.183	.191	-1.235
350	436	-.429	.192	.111	-1.256
350	437	-.414	.174	.082	-1.476
350	438	-.426	.173	.079	-1.201
350	439	-.459	.195	.084	-1.182
350	440	-.428	.192	.163	-1.283
350	441	-.381	.180	.155	-1.098
350	442	-.339	.165	.281	-.973
350	443	-.331	.174	.214	-1.019
350	444	-.467	.212	.119	-1.692
350	445	-.444	.192	.051	-1.623
350	446	-.482	.223	.117	-1.437
350	447	-.402	.207	.140	-1.308
350	448	-.309	.169	.156	-.901
350	449	-.195	.148	.289	-.897
350	450	-.212	.160	.222	-.823
350	451	-.209	.158	.228	-.730
350	452	-.503	.269	.294	-1.806
350	453	-.333	.232	.300	-1.473
350	454	-.219	.166	.277	-.924
350	455	-.185	.147	.275	-.762
350	456	-.202	.149	.252	-.907
350	457	-.171	.135	.213	-.781
350	458	-.176	.144	.275	-.745
350	459	-.170	.142	.239	-.789
350	460	-.176	.143	.321	-.829
350	461	-.186	.142	.265	-.663
350	462	-.167	.138	.293	-.586
350	463	-.152	.131	.276	-.618
350	464	-.160	.129	.253	-.579
350	465	-.151	.136	.288	-.847
350	466	-.167	.145	.374	-.742
350	467	-.190	.142	.241	-.703
350	468	-.167	.138	.314	-.633
350	469	-.175	.135	.265	-.651
350	470	-.153	.136	.260	-.973
350	471	-.150	.131	.288	-.768
350	472	-.513	.281	.128	-1.972
350	501	.213	.327	1.012	-1.330
350	502	.229	.211	.938	-.779
350	503	.134	.149	.787	-.325
350	504	.006	.159	.593	-.443
350	505	.210	.346	1.102	-1.070
350	506	.277	.313	.969	-.912
350	507	.201	.174	.866	-.760
350	508	.032	.142	.608	-.470
350	509	.071	.338	1.022	-1.099
350	510	.116	.353	.916	-1.260
350	511	.109	.184	.682	-.914
350	512	-.032	.140	.515	-.534
350	513	-.021	.339	1.239	-1.460
350	514	.036	.360	1.049	-1.256
350	515	.077	.199	.752	-1.230
350	516	-.080	.157	.471	-.778
350	517	-.051	.356	1.060	-1.731
350	518	-.092	.364	.887	-1.361
350	519	-.030	.216	.579	-1.118
350	520	-.149	.166	.526	-.903
350	521	-.054	.327	.786	-1.452
350	522	-.127	.335	.676	-1.393
350	523	-.007	.205	.610	-1.059
350	524	-.124	.196	.602	-1.036
350	525	-.146	.253	.589	-1.493
350	526	-.048	.200	.574	-1.043
350	527	-.014	.177	.749	-.709
350	528	-.051	.176	.540	-.884
350	529	-.144	.183	.574	-.968
350	530	-.132	.153	.365	-.836
350	531	-.319	.225	.351	-1.229
350	532	-.106	.141	.297	-.679
350	533	.067	.151	.665	-.441
350	534	-.105	.150	.379	-.702
350	601	.129	.189	.715	-.444
350	602	.268	.189	.908	-.372
350	603	.349	.209	1.076	-.311
350	604	.436	.219	1.437	-.607
350	605	.134	.167	.805	-.395
350	606	.334	.186	.996	-.437
350	607	.486	.219	1.143	-.843
350	608	.512	.258	1.244	-.569
350	609	.072	.166	.634	-.414
350	610	.247	.173	.909	-.313
350	611	.434	.228	1.248	-.415
350	612	.428	.270	1.293	-.973
350	613	.022	.169	.712	-.510
350	614	.168	.176	.777	-.504
350	615	.328	.274	1.091	-1.158
350	616	.358	.301	1.244	-.938
350	617	-.043	.179	.651	-.565
350	618	.111	.181	.845	-.591
350	619	.197	.291	1.026	-1.480
350	620	.157	.301	1.096	-1.041
350	621	-.104	.164	.428	-.952
350	622	-.029	.196	.697	-1.017
350	623	-.003	.286	.920	-1.209
350	624	.050	.326	.972	-1.331
350	625	-.180	.147	.289	-.738
350	626	-.101	.156	.439	-.698
350	627	-.140	.181	.500	-.914
350	628	-.150	.189	.473	-1.245
350	629	-.175	.159	.376	-.870
350	630	-.257	.148	.378	-.825
350	631	-.239	.149	.196	-.998
350	632	-.334	.180	.413	-1.099
350	633	.079	.141	.754	-.374
350	634	-.297	.213	.587	-1.277
350	801	-.154	.134	.312	-.612
350	802	-.126	.127	.294	-.546
350	803	.241	.146	.906	-.283
350	804	-.202	.132	.203	-.734
350	805	-.107	.142	.345	-.618
350	806	-.254	.171	.346	-.886
350	807	-.316	.172	.177	-1.045
350	808	-.304	.162	.177	-.914

WD	TAP	CPMEAN	CPRMS	CPMAX	CPMIN
350	809	-.252	.146	.163	-.802
350	810	-.184	.191	.400	-1.012
350	811	-.123	.132	.280	-.630
350	812	-.139	.154	.357	-.623
350	813	-.201	.167	.409	-.785
350	814	-.150	.177	.509	-.879
350	815	-.202	.158	.291	-.867
350	901	-.345	.216	.339	-1.392
350	902	-.338	.180	.224	-1.075
350	903	-.332	.165	.238	-1.132
350	904	-.204	.194	.339	-1.117
350	905	-.329	.175	.177	-1.613
350	906	-.399	.203	.097	-1.414
350	907	-.377	.184	.214	-1.596
350	908	-.392	.187	.272	-1.104
350	909	-.358	.180	.198	-1.091
350	910	-.407	.188	.216	-1.665
350	911	-.419	.213	.144	-1.700
350	912	-.369	.174	.142	-1.253
350	913	-.468	.230	.105	-1.474
350	914	-.398	.178	.220	-1.414
350	915	-.439	.225	.105	-1.511
350	916	-.378	.183	.341	-1.114
350	917	-.460	.221	.144	-1.574
350	918	-.481	.215	.146	-1.563
350	919	-.457	.247	.129	-1.572
350	920	-.368	.212	.361	-1.433
350	921	-.426	.206	.120	-1.565
350	1101	.156	.123	.712	-.384
350	1102	.157	.139	.638	-.420
350	1103	.141	.132	.587	-.359
350	1104	-.006	.118	.484	-.439
350	1105	.020	.115	.376	-.336
350	1106	-.050	.142	.474	-.600
350	1107	.066	.135	.561	-.425
350	1108	.093	.128	.692	-.312
350	1109	.099	.115	.614	-.436
350	1110	.127	.110	.498	-.208
350	1111	.131	.109	.486	-.234
350	1112	-.041	.142	.503	-.528
350	1113	.041	.154	.566	-.572
350	1114	.088	.137	.546	-.422
350	1115	.120	.109	.470	-.239
350	1116	.102	.123	.482	-.483
350	1117	.083	.105	.477	-.270
350	1118	.059	.128	.474	-.436
350	1119	.032	.126	.416	-.733
350	1120	-.051	.164	.562	-.675
350	1121	.078	.126	.587	-.338
350	1122	.084	.131	.650	-.420

WD	TAP	CPMEAN	CPRMS	CPMAX	CPMIN
350	1123	.075	.121	.535	-.319
350	1124	.002	.146	.518	-.505
350	1125	.153	.117	.556	-.298
350	1126	.121	.126	.542	-.518
350	1201	.124	.119	.533	-.337
350	1202	.077	.140	.550	-.637
350	1203	.170	.127	.802	-.320
350	1204	.157	.125	.684	-.456
350	1205	.079	.143	.689	-.745
350	1206	.228	.150	1.060	-.215
350	1207	.211	.124	.744	-.250
350	1208	.229	.149	.958	-.201
350	1209	.256	.147	.900	-.134
350	1210	.135	.129	.719	-.253
350	1211	.196	.127	.666	-.159
350	1212	.045	.114	.478	-.256
350	1213	-.080	.142	.446	-.569
350	1214	.077	.138	.550	-.436
350	1215	.282	.146	.794	-.143
350	1216	.330	.159	.914	-.084
350	1217	.131	.110	.511	-.178
350	1218	.165	.123	.951	-.181
350	1219	.044	.120	.518	-.304
350	1220	.198	.125	.659	-.221
350	1221	.336	.164	1.231	-.093
350	1222	.139	.113	.584	-.209
350	1223	.065	.121	.439	-.306
350	1224	.282	.157	.966	-.163
350	1225	.445	.198	1.296	-.138
350	1226	.304	.158	1.163	-.169
350	1227	.179	.142	.686	-.289
350	1228	.064	.124	.479	-.303
350	1229	.118	.137	.601	-.696
350	1301	.082	.129	.467	-.714
350	1302	.077	.129	.482	-.590
350	1303	.090	.131	.506	-.567
350	1304	.079	.120	.485	-.417
350	1305	.220	.147	.795	-.216
350	1306	.212	.131	.943	-.197
350	1307	.158	.123	.587	-.262
350	1308	.079	.146	.518	-.467
350	1309	.070	.127	.466	-.499
350	1311	.256	.141	.757	-.181
350	1312	.223	.127	.695	-.161
350	1313	.146	.137	.645	-.360
350	1314	.108	.123	.542	-.355
350	1315	.318	.169	1.211	-.190
350	1316	.298	.146	.934	-.130
350	1317	.135	.117	.516	-.242
350	1318	.243	.141	.788	-.161

WD	TAP	CPMEAN	CPRMS	CPMAX	CPMIN
350	1319	.179	.126	.636	-.190
350	1320	.148	.122	.512	-.238
350	1321	.107	.117	.509	-.247
350	1322	.175	.127	.663	-.315
350	1323	.315	.142	.901	-.141
350	1324	.189	.132	.661	-.204
350	1325	.136	.120	.656	-.255
350	1326	.198	.117	.673	-.189
350	1327	.156	.106	.509	-.190
350	1328	.175	.136	.675	-.279
350	1329	.421	.188	1.229	-.081
350	1330	.063	.188	.500	-.863
350	1331	.189	.136	.813	-.434
350	1401	.126	.139	.615	-.419
350	1402	.064	.118	.532	-.373
350	1403	.099	.144	.548	-.350
350	1404	.086	.126	.454	-.403
350	1405	.101	.128	.509	-.350
350	1406	.100	.118	.560	-.318
350	1407	.091	.125	.477	-.306
350	1408	.079	.137	.786	-.366
350	1409	-.007	.150	.597	-.548
350	1410	.052	.148	.740	-.554
350	1411	.082	.118	.503	-.400
350	1412	.096	.123	.602	-.267
350	1413	.082	.116	.472	-.302
350	1414	.011	.168	.543	-.571
350	1415	.045	.149	.540	-.416
350	1416	.095	.123	.545	-.293
350	1417	.096	.112	.558	-.207
350	1418	.117	.130	.633	-.444
350	1419	.101	.105	.452	-.269
350	1420	.121	.129	.590	-.467
350	1421	.108	.145	.619	-.506
350	1422	.084	.121	.664	-.469
350	1423	.107	.118	.537	-.398
350	1424	.116	.113	.679	-.236
350	1425	.111	.105	.415	-.243
350	1426	.127	.120	.490	-.238
350	1427	.121	.127	.712	-.257
350	1428	.127	.112	.507	-.297
350	1429	.125	.109	.594	-.223
350	1430	.134	.112	.557	-.198
350	1431	.140	.121	.567	-.216
350	1432	.121	.115	.495	-.235
350	1433	.123	.114	.519	-.185
350	1434	.109	.116	.555	-.265
350	1435	.083	.140	.540	-.395
350	1901	.093	.127	.596	-.563
350	1902	.210	.128	.653	-.319

WD	TAP	CPMEAN	CPRMS	CPMAX	CPMIN	WD	TAP	CPMEAN	CPRMS	CPMAX	CPMIN	WD	TAP	CPMEAN	CPRMS	CPMAX	CPMIN
350	1903	.351	.107	.773	-.025	350	1925	.245	.155	.872	-.157	350	1947	.342	.173	1.183	-.128
350	1904	.161	.119	.665	-.339	350	1926	.119	.133	.634	-.272	350	1948	.447	.214	1.315	-.153
350	1905	.252	.111	.642	-.166	350	1927	.129	.127	.669	-.317	350	1949	.362	.196	1.209	-.104
350	1906	.233	.136	.743	-.196	350	1928	.180	.135	.855	-.426	350	1950	.398	.202	1.129	-.172
350	1907	.129	.133	.677	-.274	350	1929	.231	.128	.659	-.138	350	1951	.129	.123	.575	-.289
350	1908	.170	.128	.618	-.242	350	1930	.333	.168	.937	-.214	350	1952	.223	.128	.759	-.147
350	1909	.270	.161	.961	-.181	350	1931	.311	.164	.850	-.172	350	1953	.251	.134	.722	-.187
350	1910	.179	.129	.702	-.249	350	1932	.166	.112	.518	-.207	350	1954	.346	.167	1.016	-.172
350	1911	.153	.135	.775	-.259	350	1933	.124	.123	.637	-.374	350	1955	.410	.194	1.189	-.134
350	1912	.160	.163	.692	-.423	350	1934	.157	.132	.627	-.371	350	1956	.327	.173	1.087	-.147
350	1913	.054	.161	.589	-.556	350	1935	.217	.145	.828	-.400	350	1957	.257	.140	.782	-.157
350	1914	.097	.115	.459	-.339	350	1936	.292	.174	.857	-.341	350	1958	.329	.161	.945	-.190
350	1915	.100	.130	.637	-.458	350	1937	.377	.180	1.222	-.083	350	1959	.437	.229	1.341	-.039
350	1916	.169	.138	.678	-.226	350	1938	.404	.201	1.396	-.185	350	1960	.361	.194	1.137	-.382
350	1917	.267	.154	.849	-.322	350	1939	.271	.159	1.099	-.204	350	1961	.405	.181	1.416	-.045
350	1918	.349	.184	1.187	-.123	350	1940	.144	.121	.565	-.321	350	1962	.278	.158	.900	-.152
350	1919	.263	.162	1.060	-.118	350	1941	.200	.134	.707	-.222	350	1963	.300	.171	1.092	-.184
350	1920	.295	.170	1.014	-.169	350	1942	.284	.147	.851	-.133	350	1964	.160	.130	.722	-.234
350	1921	.127	.117	.640	-.202	350	1943	.361	.183	1.054	-.120	350	1965	.224	.135	.704	-.184
350	1922	.145	.121	.492	-.265	350	1944	.414	.181	1.096	-.068	350	1966	.318	.153	.912	-.125
350	1923	.156	.138	.673	-.309	350	1945	.200	.123	.657	-.262	350	1967	.401	.203	1.284	-.067
350	1924	.252	.137	.761	-.181	350	1946	.241	.145	.712	-.172	350	1968	.370	.172	.994	-.060

WD	TAP	CPMEAN	CPRMS	CPMAX	CPMIN
0	1101	.006	.116	.384	-.404
0	1102	.028	.145	.659	-.435
0	1103	.035	.120	.477	-.404
0	1104	.003	.111	.424	-.493
0	1105	.016	.108	.340	-.293
0	1106	-.005	.139	.591	-.521
0	1107	.090	.109	.544	-.238
0	1108	.072	.131	.563	-.353
0	1109	.064	.119	.594	-.339
0	1110	.018	.108	.433	-.343
0	1111	.017	.098	.342	-.261
0	1112	.024	.111	.344	-.370
0	1113	.116	.132	.808	-.288
0	1114	.074	.123	.546	-.310
0	1115	.045	.109	.422	-.351
0	1116	.025	.115	.578	-.367
0	1117	.023	.103	.356	-.305
0	1118	-.003	.113	.389	-.415
0	1119	.017	.111	.470	-.500
0	1120	.009	.105	.356	-.327
0	1121	.015	.108	.332	-.341
0	1122	.021	.110	.343	-.353
0	1123	.036	.105	.357	-.341
0	1124	.022	.104	.379	-.381
0	1125	.034	.114	.397	-.288
0	1126	.026	.110	.383	-.386
0	1201	-.014	.105	.303	-.435
0	1202	-.038	.123	.423	-.423
0	1203	-.003	.122	.435	-.395
0	1204	-.014	.113	.385	-.446
0	1205	-.040	.125	.397	-.446
0	1206	-.030	.125	.432	-.484
0	1207	-.011	.110	.327	-.367
0	1208	.004	.100	.361	-.329
0	1209	.002	.103	.332	-.299
0	1210	-.004	.100	.322	-.307
0	1211	-.087	.096	.197	-.504
0	1212	-.082	.097	.248	-.395
0	1213	-.065	.100	.285	-.449
0	1214	-.025	.119	.392	-.527
0	1215	-.018	.102	.312	-.423
0	1216	.001	.093	.271	-.281
0	1217	-.001	.105	.405	-.350
0	1218	-.006	.108	.344	-.366
0	1219	-.018	.110	.404	-.480
0	1220	.012	.102	.344	-.278
0	1221	.019	.100	.373	-.348
0	1222	.009	.098	.280	-.334
0	1223	-.008	.093	.308	-.297
0	1224	.020	.100	.407	-.290
0	1225	.023	.099	.352	-.282
0	1226	.029	.093	.352	-.279
0	1227	.014	.096	.295	-.292
0	1228	-.002	.102	.360	-.385
0	1229	.044	.105	.421	-.290
0	1301	-.021	.104	.340	-.479
0	1302	-.047	.116	.349	-.477
0	1303	-.050	.125	.368	-.550
0	1304	.007	.096	.314	-.326
0	1305	.008	.117	.364	-.336
0	1306	.032	.103	.417	-.315
0	1307	.050	.111	.417	-.320
0	1308	.005	.123	.380	-.486
0	1309	.019	.107	.331	-.374
0	1311	.010	.111	.369	-.374
0	1312	.031	.104	.385	-.315
0	1313	.077	.117	.491	-.303
0	1314	.040	.103	.355	-.300
0	1315	.020	.115	.426	-.312
0	1316	.012	.110	.467	-.408
0	1317	.014	.098	.324	-.310
0	1318	.012	.106	.348	-.336
0	1319	.030	.100	.320	-.379
0	1320	.026	.096	.356	-.268
0	1321	.029	.106	.394	-.305
0	1322	.022	.102	.344	-.317
0	1323	.028	.094	.377	-.247
0	1324	.046	.115	.377	-.293
0	1325	.032	.098	.401	-.273
0	1326	.038	.108	.377	-.310
0	1327	.042	.097	.366	-.213
0	1328	.027	.102	.318	-.317
0	1329	.033	.105	.420	-.362
0	1330	.018	.125	.483	-.376
0	1331	-.016	.121	.354	-.471
0	1401	.038	.111	.473	-.384
0	1402	-.031	.144	.629	-.593
0	1403	.042	.119	.456	-.388
0	1404	-.027	.123	.322	-.443
0	1405	.041	.151	.550	-.443
0	1406	.066	.117	.520	-.396
0	1407	-.005	.124	.405	-.464
0	1408	.071	.128	.660	-.394
0	1409	.105	.125	.597	-.368
0	1410	.109	.123	.625	-.281
0	1411	.068	.116	.514	-.362
0	1412	.064	.097	.450	-.254
0	1413	.076	.110	.479	-.244
0	1414	.104	.123	.676	-.335
0	1415	.121	.119	.774	-.214
0	1416	.048	.106	.420	-.357
0	1417	.060	.103	.471	-.226
0	1418	.076	.132	.582	-.300
0	1419	.056	.119	.512	-.458
0	1420	.102	.138	.695	-.364
0	1421	.068	.139	.578	-.586
0	1422	-.008	.112	.524	-.416
0	1423	.025	.109	.417	-.358
0	1424	.054	.110	.611	-.279
0	1425	.056	.115	.441	-.300
0	1426	.064	.117	.480	-.419
0	1427	.052	.123	.536	-.348
0	1428	.056	.109	.403	-.243
0	1429	.066	.114	.523	-.312
0	1430	.078	.110	.566	-.271
0	1431	.077	.098	.521	-.246
0	1432	.076	.110	.439	-.239
0	1433	.067	.110	.482	-.261
0	1434	.021	.114	.396	-.390
0	1435	-.015	.113	.303	-.786
0	1901	.043	.101	.397	-.231
0	1902	.161	.107	.552	-.167
0	1903	.249	.097	.586	-.068
0	1904	.098	.120	.656	-.283
0	1905	.109	.108	.465	-.288
0	1906	.055	.106	.430	-.335
0	1907	.086	.122	.573	-.376
0	1908	.052	.115	.516	-.313
0	1909	-.042	.113	.297	-.507
0	1910	-.020	.104	.295	-.487
0	1911	.062	.118	.438	-.296
0	1912	.073	.109	.396	-.397
0	1913	.108	.121	.583	-.315
0	1914	.067	.110	.559	-.312
0	1915	.051	.119	.414	-.371
0	1916	.066	.115	.547	-.271
0	1917	.041	.106	.402	-.295
0	1918	-.033	.106	.319	-.358
0	1919	-.007	.099	.288	-.424
0	1920	.004	.102	.361	-.415
0	1921	.058	.134	.530	-.322
0	1922	.063	.117	.532	-.310
0	1923	.065	.116	.457	-.264
0	1924	.044	.105	.355	-.339
0	1925	.002	.100	.313	-.360
0	1926	-.008	.099	.337	-.337
0	1927	.043	.114	.450	-.312
0	1928	.056	.116	.443	-.322
0	1929	.060	.108	.459	-.404
0	1930	.030	.102	.361	-.341

WD	TAP	CPMEAN	CPRMS	CPMAX	CPMIN
0	1931	.001	.097	.289	-.377
0	1932	.017	.092	.378	-.274
0	1933	.043	.122	.522	-.373
0	1934	.038	.109	.416	-.324
0	1935	.042	.108	.448	-.349
0	1936	.032	.101	.356	-.367
0	1937	.018	.097	.409	-.379
0	1938	-.001	.100	.297	-.384
0	1939	.008	.112	.357	-.398
0	1940	.014	.107	.447	-.348
0	1941	.006	.108	.344	-.361
0	1942	.004	.102	.347	-.355
0	1943	.011	.089	.296	-.332
0	1944	.008	.086	.297	-.308
0	1945	.023	.116	.436	-.341
0	1946	.011	.107	.345	-.298
0	1947	.012	.107	.390	-.391
0	1948	.007	.102	.308	-.349
0	1949	-.013	.097	.303	-.353
0	1950	.001	.098	.316	-.315
0	1951	.012	.116	.398	-.411
0	1952	.011	.103	.335	-.339
0	1953	.032	.103	.372	-.343
0	1954	.029	.104	.410	-.346
0	1955	.014	.097	.326	-.337
0	1956	.013	.101	.403	-.300
0	1957	.049	.118	.577	-.351
0	1958	.038	.105	.419	-.312
0	1959	-.007	.108	.415	-.402
0	1960	.008	.098	.301	-.387
0	1961	.014	.094	.291	-.360
0	1962	.004	.102	.333	-.349
0	1963	.027	.106	.320	-.337
0	1964	.079	.105	.442	-.259
0	1965	.048	.114	.449	-.303
0	1966	.037	.102	.379	-.302
0	1967	-.006	.097	.308	-.365
0	1968	.022	.100	.337	-.365
10	1101	.046	.106	.375	-.350
10	1102	.096	.152	.620	-.353
10	1103	.083	.130	.584	-.288
10	1104	.022	.120	.522	-.662
10	1105	.027	.110	.426	-.454
10	1106	-.010	.144	.406	-.586
10	1107	.086	.120	.572	-.252
10	1108	.071	.124	.476	-.362
10	1109	.063	.120	.469	-.316
10	1110	.018	.108	.384	-.349
10	1111	.021	.102	.364	-.418
10	1112	.019	.127	.481	-.528
10	1113	.122	.128	.784	-.269
10	1114	.083	.123	.503	-.268
10	1115	.040	.118	.484	-.354
10	1116	.012	.116	.384	-.381
10	1117	.030	.115	.362	-.299
10	1118	.003	.114	.382	-.401
10	1119	.026	.104	.398	-.350
10	1120	.021	.124	.531	-.519
10	1121	.015	.117	.386	-.416
10	1122	.023	.121	.401	-.427
10	1123	.036	.113	.442	-.401
10	1124	.025	.107	.371	-.361
10	1125	.033	.108	.394	-.453
10	1126	.020	.112	.394	-.444
10	1201	-.031	.117	.329	-.634
10	1202	-.045	.122	.380	-.504
10	1203	-.006	.123	.437	-.503
10	1204	-.014	.121	.387	-.616
10	1205	-.036	.121	.350	-.488
10	1206	-.027	.123	.376	-.596
10	1207	-.008	.121	.408	-.545
10	1208	.009	.097	.330	-.310
10	1209	.005	.099	.343	-.330
10	1210	-.005	.101	.276	-.349
10	1211	-.098	.107	.229	-.435
10	1212	-.091	.102	.201	-.529
10	1213	-.064	.112	.302	-.425
10	1214	-.031	.132	.412	-.536
10	1215	-.012	.095	.335	-.295
10	1216	-.004	.107	.451	-.378
10	1217	.005	.090	.333	-.311
10	1218	.008	.101	.301	-.392
10	1219	-.014	.110	.296	-.440
10	1220	.015	.103	.346	-.308
10	1221	.024	.096	.323	-.308
10	1222	.010	.091	.295	-.327
10	1223	.001	.104	.426	-.350
10	1224	.035	.086	.364	-.247
10	1225	.031	.103	.436	-.316
10	1226	.029	.108	.371	-.280
10	1227	.021	.094	.395	-.295
10	1228	.007	.098	.323	-.392
10	1229	.038	.103	.319	-.312
10	1301	-.030	.109	.279	-.594
10	1302	-.054	.130	.354	-.525
10	1303	-.074	.145	.399	-.731
10	1304	.001	.112	.343	-.364
10	1305	.018	.117	.425	-.408
10	1306	.033	.109	.397	-.383
10	1307	.051	.116	.421	-.342
10	1308	-.030	.127	.377	-.617
10	1309	.017	.117	.467	-.406
10	1311	.022	.110	.354	-.425
10	1312	.043	.106	.411	-.350
10	1313	.079	.116	.520	-.382
10	1314	.040	.115	.385	-.350
10	1315	.021	.109	.402	-.326
10	1316	.022	.102	.345	-.364
10	1317	.022	.113	.394	-.323
10	1318	.021	.114	.391	-.421
10	1319	.027	.110	.451	-.331
10	1320	.026	.100	.321	-.362
10	1321	.036	.103	.368	-.462
10	1322	.024	.102	.378	-.367
10	1323	.029	.108	.352	-.339
10	1324	.046	.114	.456	-.358
10	1325	.037	.103	.337	-.374
10	1326	.042	.108	.408	-.320
10	1327	.045	.100	.347	-.428
10	1328	.029	.114	.475	-.310
10	1329	.031	.101	.356	-.362
10	1330	.006	.119	.447	-.405
10	1331	-.011	.115	.410	-.397
10	1401	.082	.123	.517	-.255
10	1402	.078	.161	.723	-.462
10	1403	.061	.131	.575	-.541
10	1404	-.070	.126	.301	-.674
10	1405	.112	.152	.958	-.346
10	1406	.107	.114	.506	-.344
10	1407	-.031	.133	.442	-.934
10	1408	.099	.136	.593	-.454
10	1409	.114	.132	.862	-.271
10	1410	.126	.120	.608	-.251
10	1411	.081	.118	.551	-.311
10	1412	.089	.121	.545	-.224
10	1413	.111	.111	.554	-.225
10	1414	.114	.120	.616	-.321
10	1415	.134	.141	.825	-.251
10	1416	.066	.115	.528	-.300
10	1417	.080	.102	.371	-.276
10	1418	.089	.132	.626	-.329
10	1419	.107	.119	.563	-.313
10	1420	.077	.128	.495	-.369
10	1421	-.002	.152	.533	-.876
10	1422	-.014	.112	.390	-.402
10	1423	.030	.110	.426	-.367
10	1424	.059	.119	.567	-.364
10	1425	.093	.109	.485	-.215
10	1426	.099	.119	.637	-.305
10	1427	.041	.116	.462	-.374

WD	TAP	CPMEAN	CPRMS	CPMAX	CPMIN
10	1428	.057	.123	.776	-.328
10	1429	.075	.111	.531	-.308
10	1430	.093	.110	.613	-.230
10	1431	.105	.122	.616	-.243
10	1432	.113	.113	.578	-.250
10	1433	.094	.120	.520	-.296
10	1434	.073	.129	.524	-.304
10	1435	.004	.115	.420	-.559
10	1901	.037	.109	.385	-.321
10	1902	.144	.113	.646	-.356
10	1903	.249	.104	.547	-.063
10	1904	.085	.115	.486	-.259
10	1905	.102	.108	.481	-.351
10	1906	.052	.109	.552	-.289
10	1907	.072	.117	.561	-.385
10	1908	.045	.114	.440	-.335
10	1909	-.037	.103	.281	-.466
10	1910	-.020	.109	.310	-.388
10	1911	.069	.116	.448	-.259
10	1912	.075	.118	.554	-.289
10	1913	.098	.113	.528	-.264
10	1914	.081	.128	.655	-.347
10	1915	.049	.103	.368	-.305
10	1916	.069	.116	.471	-.302
10	1917	.055	.108	.406	-.347
10	1918	-.022	.108	.343	-.396
10	1919	-.006	.097	.343	-.316
10	1920	.006	.101	.324	-.349
10	1921	.073	.124	.835	-.332
10	1922	.076	.118	.482	-.328
10	1923	.062	.110	.431	-.454
10	1924	.051	.111	.450	-.318
10	1925	.007	.108	.440	-.377
10	1926	-.005	.109	.361	-.400
10	1927	.072	.120	.438	-.312
10	1928	.066	.115	.474	-.299
10	1929	.066	.115	.472	-.358
10	1930	.040	.102	.361	-.288
10	1931	.004	.100	.380	-.420
10	1932	.024	.092	.282	-.285
10	1933	.067	.130	.561	-.357
10	1934	.059	.113	.388	-.343
10	1935	.049	.108	.458	-.273
10	1936	.035	.108	.380	-.338
10	1937	.025	.100	.347	-.319
10	1938	.002	.110	.368	-.449
10	1939	.013	.098	.318	-.326
10	1940	.035	.111	.369	-.439
10	1941	.019	.114	.330	-.424
10	1942	.010	.105	.402	-.331
10	1943	.010	.090	.412	-.269
10	1944	.009	.085	.253	-.259
10	1945	.046	.105	.402	-.357
10	1946	.018	.115	.349	-.538
10	1947	.022	.103	.380	-.297
10	1948	.007	.107	.373	-.324
10	1949	-.018	.102	.342	-.391
10	1950	-.000	.107	.337	-.427
10	1951	.061	.127	.511	-.321
10	1952	.026	.108	.373	-.314
10	1953	.040	.111	.399	-.415
10	1954	.050	.110	.375	-.326
10	1955	.015	.099	.411	-.453
10	1956	.019	.102	.298	-.314
10	1957	.082	.134	.670	-.390
10	1958	.058	.114	.465	-.366
10	1959	-.020	.116	.298	-.376
10	1960	.001	.106	.334	-.333
10	1961	.022	.097	.332	-.314
10	1962	.008	.114	.346	-.553
10	1963	.039	.094	.308	-.284
10	1964	.076	.106	.428	-.236
10	1965	.081	.115	.414	-.422
10	1966	.049	.106	.436	-.311
10	1967	-.011	.101	.363	-.369
10	1968	.029	.103	.354	-.308
20	1101	.045	.117	.396	-.346
20	1102	.122	.148	.743	-.269
20	1103	.095	.141	.592	-.433
20	1104	.041	.133	.465	-.541
20	1105	.043	.109	.415	-.328
20	1106	.036	.145	.803	-.695
20	1107	.092	.133	.650	-.314
20	1108	.071	.123	.511	-.337
20	1109	.065	.121	.607	-.301
20	1110	.023	.099	.355	-.278
20	1111	.013	.102	.331	-.345
20	1112	.055	.127	.733	-.339
20	1113	.116	.130	.576	-.254
20	1114	.092	.123	.707	-.382
20	1115	.062	.117	.501	-.294
20	1116	.040	.131	.449	-.390
20	1117	.024	.111	.392	-.402
20	1118	.014	.120	.502	-.379
20	1119	.040	.106	.496	-.326
20	1120	.050	.120	.473	-.412
20	1121	.019	.113	.365	-.344
20	1122	.027	.119	.448	-.343
20	1123	.044	.119	.411	-.397
20	1124	.029	.113	.361	-.545
20	1125	.044	.111	.570	-.295
20	1126	.024	.108	.345	-.445
20	1201	-.039	.109	.313	-.515
20	1202	-.053	.123	.327	-.505
20	1203	-.014	.127	.380	-.454
20	1204	-.026	.133	.391	-.681
20	1205	-.040	.121	.342	-.490
20	1206	-.023	.123	.379	-.473
20	1207	-.026	.131	.380	-.803
20	1208	.004	.108	.364	-.485
20	1209	.010	.113	.519	-.411
20	1210	-.015	.106	.372	-.355
20	1211	-.094	.106	.241	-.522
20	1212	-.104	.109	.213	-.558
20	1213	-.073	.106	.264	-.453
20	1214	-.027	.117	.368	-.424
20	1215	-.008	.101	.298	-.389
20	1216	.008	.105	.328	-.390
20	1217	.007	.098	.315	-.338
20	1218	-.001	.111	.369	-.364
20	1219	-.017	.115	.377	-.428
20	1220	.018	.100	.386	-.377
20	1221	.021	.105	.441	-.301
20	1222	-.005	.104	.364	-.423
20	1223	-.011	.102	.341	-.400
20	1224	.037	.093	.423	-.246
20	1225	.034	.100	.435	-.310
20	1226	.025	.106	.372	-.387
20	1227	.006	.110	.331	-.407
20	1228	.006	.109	.354	-.500
20	1229	.061	.111	.497	-.310
20	1301	-.042	.106	.274	-.515
20	1302	-.046	.116	.333	-.418
20	1303	-.066	.130	.364	-.605
20	1304	.002	.116	.394	-.378
20	1305	.006	.115	.337	-.516
20	1306	.026	.104	.345	-.331
20	1307	.039	.106	.439	-.419
20	1308	-.007	.119	.374	-.445
20	1309	.020	.109	.396	-.398
20	1311	.017	.110	.413	-.421
20	1312	.023	.103	.366	-.284
20	1313	.058	.125	.576	-.319
20	1314	.033	.111	.441	-.393
20	1315	.018	.108	.363	-.353
20	1316	.014	.098	.397	-.410
20	1317	.019	.108	.378	-.386
20	1318	.022	.113	.384	-.350
20	1319	.028	.112	.420	-.345
20	1320	.024	.102	.341	-.331

WD	TAP	CPMEAN	CPRMS	CPMAX	CPMIN
20	1321	.036	.103	.384	-.276
20	1322	.026	.102	.389	-.442
20	1323	.030	.113	.399	-.366
20	1324	.040	.108	.372	-.423
20	1325	.036	.098	.315	-.292
20	1326	.043	.099	.391	-.255
20	1327	.039	.096	.349	-.278
20	1328	.033	.107	.389	-.395
20	1329	.030	.105	.327	-.302
20	1330	.009	.130	.456	-.657
20	1331	-.011	.125	.398	-.456
20	1401	.072	.124	.613	-.642
20	1402	.097	.167	.715	-.369
20	1403	.066	.153	.620	-.633
20	1404	-.093	.121	.301	-.803
20	1405	.111	.146	.671	-.355
20	1406	.090	.133	.635	-.343
20	1407	-.060	.130	.322	-.641
20	1408	.085	.139	.597	-.433
20	1409	.105	.120	.602	-.301
20	1410	.133	.130	.808	-.270
20	1411	.054	.121	.494	-.453
20	1412	.075	.115	.551	-.301
20	1413	.105	.117	.550	-.235
20	1414	.104	.116	.533	-.279
20	1415	.126	.117	.579	-.224
20	1416	.044	.118	.399	-.423
20	1417	.070	.106	.453	-.258
20	1418	.093	.131	.640	-.337
20	1419	.089	.113	.511	-.290
20	1420	.077	.135	.604	-.397
20	1421	-.014	.162	.464	-.973
20	1422	-.022	.107	.346	-.363
20	1423	.013	.108	.342	-.406
20	1424	.052	.115	.427	-.442
20	1425	.076	.114	.573	-.282
20	1426	.081	.121	.497	-.373
20	1427	.042	.111	.431	-.320
20	1428	.046	.106	.669	-.323
20	1429	.063	.116	.567	-.317
20	1430	.074	.110	.492	-.407
20	1431	.093	.112	.486	-.300
20	1432	.102	.113	.530	-.220
20	1433	.087	.119	.547	-.305
20	1434	.065	.128	.575	-.360
20	1435	-.004	.130	.427	-.539
20	1901	.035	.106	.389	-.282
20	1902	.148	.101	.486	-.158
20	1903	.242	.100	.695	-.075
20	1904	.083	.104	.551	-.320
20	1905	.109	.102	.418	-.241
20	1906	.068	.114	.501	-.325
20	1907	.059	.110	.509	-.503
20	1908	.033	.110	.347	-.372
20	1909	-.042	.117	.309	-.488
20	1910	-.024	.108	.322	-.428
20	1911	.069	.110	.506	-.305
20	1912	.082	.107	.513	-.284
20	1913	.108	.124	.567	-.325
20	1914	.063	.106	.465	-.296
20	1915	.073	.108	.572	-.313
20	1916	.051	.111	.432	-.335
20	1917	.042	.101	.374	-.281
20	1918	-.013	.106	.290	-.409
20	1919	-.002	.114	.403	-.392
20	1920	.001	.114	.327	-.434
20	1921	.059	.123	.476	-.379
20	1922	.061	.110	.450	-.338
20	1923	.051	.110	.469	-.360
20	1924	.043	.109	.386	-.350
20	1925	.022	.109	.425	-.285
20	1926	-.004	.101	.370	-.414
20	1927	.061	.117	.528	-.285
20	1928	.064	.107	.399	-.332
20	1929	.055	.107	.393	-.330
20	1930	.041	.107	.523	-.324
20	1931	.007	.099	.333	-.337
20	1932	.032	.092	.330	-.285
20	1933	.066	.123	.462	-.369
20	1934	.049	.104	.435	-.274
20	1935	.038	.098	.464	-.285
20	1936	.035	.099	.350	-.298
20	1937	.021	.104	.326	-.432
20	1938	.002	.098	.306	-.307
20	1939	.013	.097	.365	-.359
20	1940	.022	.116	.462	-.507
20	1941	.004	.110	.345	-.317
20	1942	.005	.107	.360	-.351
20	1943	.006	.108	.394	-.364
20	1944	.006	.099	.260	-.273
20	1945	.030	.116	.391	-.366
20	1946	.002	.108	.381	-.444
20	1947	.008	.106	.328	-.356
20	1948	.004	.105	.323	-.616
20	1949	-.020	.103	.278	-.345
20	1950	.001	.098	.374	-.340
20	1951	.066	.122	.521	-.302
20	1952	.015	.105	.406	-.424
20	1953	.027	.103	.378	-.355
20	1954	.026	.111	.373	-.321
20	1955	.012	.096	.354	-.324
20	1956	.022	.103	.378	-.343
20	1957	.054	.129	.621	-.399
20	1958	.040	.109	.391	-.302
20	1959	-.005	.100	.359	-.422
20	1960	.004	.096	.285	-.323
20	1961	.018	.100	.310	-.384
20	1962	.001	.103	.327	-.685
20	1963	.031	.092	.327	-.294
20	1964	.058	.107	.472	-.294
20	1965	.051	.110	.474	-.280
20	1966	.042	.104	.367	-.297
20	1967	-.004	.114	.376	-.417
20	1968	.027	.111	.352	-.356
30	1101	.050	.113	.447	-.315
30	1102	.193	.169	.922	-.281
30	1103	.121	.130	.685	-.297
30	1104	.091	.125	.522	-.322
30	1105	.071	.109	.583	-.235
30	1106	.116	.156	.698	-.489
30	1107	.105	.117	.628	-.301
30	1108	.125	.128	.760	-.296
30	1109	.116	.126	.567	-.464
30	1110	.021	.105	.353	-.325
30	1111	.009	.116	.400	-.429
30	1112	.121	.133	.680	-.370
30	1113	.149	.136	.817	-.214
30	1114	.150	.127	.675	-.285
30	1115	.109	.128	.643	-.247
30	1116	.098	.120	.492	-.263
30	1117	.019	.104	.355	-.302
30	1118	.009	.137	.609	-.440
30	1119	.060	.119	.464	-.316
30	1120	.085	.128	.523	-.273
30	1121	.008	.109	.363	-.341
30	1122	.034	.114	.421	-.355
30	1123	.072	.114	.528	-.262
30	1124	.070	.113	.451	-.304
30	1125	.090	.110	.640	-.215
30	1126	.069	.111	.444	-.316
30	1201	-.053	.102	.274	-.420
30	1202	-.060	.135	.395	-.526
30	1203	-.019	.141	.422	-.469
30	1204	-.042	.136	.414	-.527
30	1205	-.040	.133	.402	-.458
30	1206	-.017	.145	.502	-.694
30	1207	-.044	.127	.331	-.610
30	1208	-.019	.115	.334	-.472
30	1209	-.003	.102	.315	-.343
30	1210	-.027	.112	.383	-.404

WD	TAP	CPMEAN	CPRMS	CPMAX	CPMIN
30	1211	-.111	.102	.181	-.419
30	1212	-.125	.115	.225	-.620
30	1213	-.096	.115	.272	-.485
30	1214	-.010	.113	.351	-.427
30	1215	-.012	.103	.291	-.326
30	1216	-.002	.101	.350	-.296
30	1217	-.001	.100	.335	-.312
30	1218	-.016	.099	.298	-.344
30	1219	-.039	.114	.312	-.564
30	1220	.003	.129	.387	-.683
30	1221	.013	.112	.380	-.317
30	1222	-.015	.110	.359	-.406
30	1223	-.025	.111	.310	-.433
30	1224	.027	.105	.354	-.331
30	1225	.029	.099	.349	-.319
30	1226	.018	.106	.426	-.303
30	1227	-.014	.106	.335	-.429
30	1228	-.013	.119	.335	-.478
30	1229	.093	.109	.478	-.244
30	1301	-.048	.108	.309	-.410
30	1302	-.039	.114	.301	-.471
30	1303	-.061	.125	.308	-.505
30	1304	.014	.107	.355	-.407
30	1305	-.019	.117	.390	-.508
30	1306	.003	.107	.341	-.365
30	1307	.013	.107	.376	-.432
30	1308	-.004	.120	.344	-.490
30	1309	.011	.107	.400	-.379
30	1311	.003	.102	.363	-.344
30	1312	.007	.114	.461	-.379
30	1313	.034	.112	.425	-.390
30	1314	.034	.101	.370	-.304
30	1315	.019	.107	.342	-.295
30	1316	.003	.112	.379	-.374
30	1317	.011	.113	.335	-.402
30	1318	.006	.108	.357	-.351
30	1319	.016	.104	.390	-.370
30	1320	.023	.106	.333	-.338
30	1321	.032	.097	.413	-.257
30	1322	.028	.108	.397	-.321
30	1323	.024	.105	.345	-.344
30	1324	.021	.107	.439	-.340
30	1325	.028	.100	.326	-.291
30	1326	.038	.099	.341	-.284
30	1327	.038	.111	.455	-.372
30	1328	.028	.105	.418	-.335
30	1329	.022	.113	.425	-.340
30	1330	-.014	.121	.328	-.378
30	1331	-.024	.118	.310	-.406
30	1401	.005	.129	.733	-.420
30	1402	.046	.163	.686	-.423
30	1403	-.039	.169	.562	-.565
30	1404	-.074	.112	.232	-.518
30	1405	.102	.129	.648	-.300
30	1406	-.006	.147	.399	-.570
30	1407	-.055	.107	.300	-.487
30	1408	.037	.130	.481	-.400
30	1409	.122	.136	.703	-.491
30	1410	.151	.128	.760	-.216
30	1411	.024	.131	.515	-.557
30	1412	.059	.122	.491	-.360
30	1413	.095	.125	.481	-.367
30	1414	.127	.125	.689	-.416
30	1415	.152	.133	.684	-.237
30	1416	.013	.118	.395	-.372
30	1417	.053	.115	.422	-.326
30	1418	.062	.120	.499	-.294
30	1419	.060	.118	.498	-.300
30	1420	.016	.120	.421	-.397
30	1421	-.028	.130	.368	-.506
30	1422	-.016	.112	.326	-.359
30	1423	.017	.112	.361	-.423
30	1424	.036	.112	.429	-.355
30	1425	.064	.107	.478	-.240
30	1426	.072	.106	.508	-.254
30	1427	.066	.111	.469	-.350
30	1428	.063	.131	.546	-.667
30	1429	.073	.118	.473	-.310
30	1430	.068	.115	.441	-.329
30	1431	.079	.118	.518	-.285
30	1432	.089	.119	.592	-.308
30	1433	.062	.115	.388	-.316
30	1434	.010	.119	.417	-.416
30	1435	-.024	.115	.320	-.413
30	1901	.080	.117	.473	-.261
30	1902	.185	.099	.577	-.100
30	1903	.309	.103	.787	-.073
30	1904	.114	.118	.500	-.279
30	1905	.174	.094	.553	-.090
30	1906	.123	.113	.558	-.232
30	1907	.061	.114	.465	-.328
30	1908	.015	.116	.397	-.378
30	1909	-.057	.113	.266	-.462
30	1910	-.061	.126	.334	-.510
30	1911	.113	.126	.627	-.237
30	1912	.129	.131	.714	-.201
30	1913	.144	.125	.651	-.232
30	1914	.085	.108	.492	-.322
30	1915	.116	.113	.544	-.215
30	1916	.026	.122	.470	-.400
30	1917	.029	.106	.451	-.318
30	1918	-.017	.109	.314	-.501
30	1919	-.006	.104	.321	-.327
30	1920	-.009	.110	.356	-.376
30	1921	.093	.121	.598	-.264
30	1922	.071	.108	.482	-.310
30	1923	.050	.110	.638	-.408
30	1924	.010	.109	.358	-.352
30	1925	.039	.120	.532	-.444
30	1926	-.013	.102	.341	-.395
30	1927	.076	.107	.527	-.349
30	1928	.073	.121	.447	-.313
30	1929	.053	.093	.419	-.274
30	1930	.039	.105	.372	-.303
30	1931	.003	.109	.343	-.366
30	1932	.029	.093	.291	-.287
30	1933	.065	.111	.503	-.410
30	1934	.037	.113	.469	-.320
30	1935	.032	.117	.440	-.376
30	1936	.026	.111	.392	-.354
30	1937	.022	.103	.361	-.343
30	1938	-.009	.109	.329	-.494
30	1939	.007	.100	.324	-.267
30	1940	-.007	.122	.348	-.664
30	1941	-.038	.115	.361	-.436
30	1942	-.022	.104	.308	-.349
30	1943	-.009	.095	.290	-.289
30	1944	-.007	.095	.303	-.349
30	1945	.001	.117	.375	-.427
30	1946	-.028	.103	.308	-.321
30	1947	-.018	.104	.356	-.374
30	1948	-.015	.104	.293	-.342
30	1949	-.032	.104	.287	-.437
30	1950	-.006	.098	.335	-.362
30	1951	.075	.110	.539	-.301
30	1952	-.009	.120	.369	-.378
30	1953	-.012	.098	.331	-.388
30	1954	-.001	.105	.357	-.344
30	1955	-.002	.106	.335	-.334
30	1956	.012	.101	.321	-.334
30	1957	.015	.111	.500	-.429
30	1958	.003	.115	.435	-.357
30	1959	.003	.114	.382	-.425
30	1960	-.003	.112	.391	-.400
30	1961	.019	.097	.362	-.328
30	1962	-.013	.105	.297	-.390
30	1963	.017	.098	.348	-.245
30	1964	.037	.113	.410	-.301
30	1965	.017	.110	.391	-.328
30	1966	.014	.105	.267	-.354

WD	TAP	CPMEAN	CPRMS	CPMAX	CPMIN
30	1967	.004	.102	.372	-.306
30	1968	.014	.106	.386	-.362
40	1101	.036	.100	.355	-.426
40	1102	.239	.153	.853	-.300
40	1103	.147	.124	.737	-.213
40	1104	.115	.117	.589	-.379
40	1105	.092	.121	.563	-.269
40	1106	.145	.133	.756	-.292
40	1107	.105	.121	.500	-.234
40	1108	.158	.132	.661	-.281
40	1109	.167	.141	.799	-.257
40	1110	.032	.102	.329	-.292
40	1111	.031	.121	.624	-.369
40	1112	.151	.122	.647	-.185
40	1113	.170	.133	.673	-.288
40	1114	.163	.117	.557	-.154
40	1115	.126	.128	.543	-.383
40	1116	.120	.115	.521	-.241
40	1117	.031	.105	.346	-.419
40	1118	.069	.156	.633	-.442
40	1119	.103	.119	.739	-.323
40	1120	.121	.116	.591	-.294
40	1121	.016	.103	.367	-.327
40	1122	.053	.116	.460	-.370
40	1123	.110	.112	.574	-.263
40	1124	.097	.111	.477	-.349
40	1125	.110	.116	.491	-.231
40	1126	.079	.118	.530	-.279
40	1201	-.058	.113	.304	-.429
40	1202	-.051	.125	.351	-.488
40	1203	.012	.137	.450	-.541
40	1204	.005	.135	.530	-.543
40	1205	-.025	.123	.379	-.481
40	1206	.010	.129	.514	-.604
40	1207	-.018	.126	.351	-.580
40	1208	-.006	.100	.288	-.395
40	1209	-.004	.103	.352	-.387
40	1210	-.020	.100	.300	-.347
40	1211	-.106	.112	.246	-.488
40	1212	-.095	.117	.269	-.567
40	1213	-.083	.110	.271	-.463
40	1214	.007	.121	.368	-.400
40	1215	-.009	.097	.371	-.345
40	1216	-.007	.098	.295	-.376
40	1217	.019	.099	.461	-.273
40	1218	.012	.110	.387	-.340
40	1219	-.025	.110	.318	-.414
40	1220	-.007	.096	.408	-.421
40	1221	.015	.089	.294	-.293
40	1222	-.024	.102	.331	-.468
40	1223	.006	.110	.382	-.437
40	1224	.037	.098	.336	-.303
40	1225	.022	.093	.393	-.262
40	1226	.007	.091	.341	-.311
40	1227	-.007	.096	.351	-.378
40	1228	.020	.108	.415	-.378
40	1229	.101	.101	.482	-.227
40	1301	-.025	.097	.271	-.341
40	1302	-.018	.121	.363	-.409
40	1303	-.033	.131	.373	-.437
40	1304	.018	.111	.402	-.316
40	1305	.003	.121	.486	-.386
40	1306	.003	.116	.395	-.418
40	1307	.019	.105	.359	-.411
40	1308	.015	.120	.399	-.403
40	1309	.021	.112	.363	-.397
40	1311	.018	.114	.372	-.316
40	1312	.018	.111	.391	-.416
40	1313	.033	.102	.412	-.256
40	1314	.040	.103	.330	-.321
40	1315	.017	.097	.358	-.272
40	1316	.004	.109	.372	-.381
40	1317	.019	.103	.330	-.372
40	1318	.014	.102	.335	-.317
40	1319	.031	.099	.364	-.298
40	1320	.029	.102	.393	-.331
40	1321	.032	.105	.404	-.324
40	1322	.032	.113	.458	-.319
40	1323	.013	.109	.376	-.327
40	1324	.032	.114	.442	-.319
40	1325	.028	.109	.371	-.420
40	1326	.045	.101	.371	-.254
40	1327	.035	.109	.356	-.313
40	1328	.033	.109	.364	-.341
40	1329	.017	.112	.385	-.389
40	1330	.001	.112	.411	-.345
40	1331	-.012	.110	.361	-.347
40	1401	-.013	.106	.319	-.370
40	1402	-.032	.132	.473	-.583
40	1403	-.104	.123	.349	-.497
40	1404	-.062	.109	.281	-.552
40	1405	.080	.128	.627	-.443
40	1406	-.065	.111	.320	-.472
40	1407	-.031	.110	.328	-.406
40	1408	.011	.110	.377	-.353
40	1409	.113	.117	.595	-.244
40	1410	.127	.108	.549	-.202
40	1411	-.012	.115	.421	-.435
40	1412	.034	.111	.408	-.423
40	1413	.080	.110	.453	-.417
40	1414	.106	.112	.606	-.231
40	1415	.143	.117	.753	-.291
40	1416	-.003	.104	.308	-.547
40	1417	.044	.093	.316	-.251
40	1418	.071	.119	.447	-.324
40	1419	.057	.113	.430	-.347
40	1420	.020	.112	.458	-.399
40	1421	-.008	.113	.348	-.507
40	1422	-.025	.110	.306	-.421
40	1423	.015	.113	.400	-.344
40	1424	.027	.106	.339	-.407
40	1425	.050	.097	.438	-.224
40	1426	.064	.107	.454	-.287
40	1427	.050	.109	.438	-.333
40	1428	.056	.098	.416	-.274
40	1429	.062	.097	.382	-.218
40	1430	.054	.103	.457	-.346
40	1431	.057	.107	.423	-.321
40	1432	.075	.103	.413	-.668
40	1433	.038	.104	.371	-.364
40	1434	-.023	.103	.333	-.389
40	1435	-.000	.096	.311	-.420
40	1901	.065	.098	.410	-.318
40	1902	.181	.120	.525	-.271
40	1903	.316	.103	.696	-.007
40	1904	.107	.095	.430	-.312
40	1905	.184	.103	.579	-.183
40	1906	.129	.110	.478	-.213
40	1907	.052	.118	.462	-.369
40	1908	.007	.102	.368	-.329
40	1909	-.039	.117	.323	-.417
40	1910	-.041	.118	.301	-.589
40	1911	.126	.114	.532	-.186
40	1912	.143	.118	.557	-.212
40	1913	.136	.119	.635	-.276
40	1914	.065	.097	.345	-.276
40	1915	.138	.117	.667	-.225
40	1916	.022	.108	.420	-.445
40	1917	.039	.122	.417	-.342
40	1918	.001	.116	.406	-.381
40	1919	.018	.103	.345	-.350
40	1920	.003	.117	.386	-.498
40	1921	.077	.108	.401	-.386
40	1922	.071	.111	.425	-.240
40	1923	.031	.101	.368	-.284
40	1924	.025	.102	.339	-.306
40	1925	.052	.108	.429	-.308
40	1926	.016	.124	.556	-.392
40	1927	.069	.108	.511	-.267
40	1928	.064	.099	.399	-.257

WD	TAP	CPMEAN	CPRMS	CPMAX	CPMIN
40	1929	.057	.104	.373	- 348
40	1930	.048	.109	.533	-.286
40	1931	.013	.111	.354	-.334
40	1932	.030	.086	.318	-.272
40	1933	.050	.105	.400	-.300
40	1934	042	.105	.400	-.271
40	1935	.035	.100	.421	-.264
40	1936	.033	.107	.414	-.373
40	1937	.025	.099	.315	-.313
40	1938	-.001	.102	.301	-.409
40	1939	.000	.104	.400	-.354
40	1940	- 010	.109	.308	-.390
40	1941	-.013	.129	.404	-.464
40	1942	-.001	.106	.363	-.366
40	1943	.010	.092	.296	-.269
40	1944	-.003	.099	.325	-.378
40	1945	-.015	.104	.339	-.453
40	1946	-.017	.117	.322	-.464
40	1947	.003	.097	.329	-.325
40	1948	.004	.096	.294	-.320
40	1949	-.028	.097	.263	-.356
40	1950	-.012	.114	.382	- 452
40	1951	.058	.111	.455	-.310
40	1952	.009	.097	.307	-.387
40	1953	.002	.101	.302	-.424
40	1954	.000	.104	.321	-.321
40	1955	-.001	.108	.336	-.361
40	1956	.016	.097	.348	-.305
40	1957	.005	.105	.350	-.312
40	1958	.002	.106	.338	-.319
40	1959	.001	.097	.353	-.266
40	1960	.004	.106	.361	-.361
40	1961	.015	.097	.351	-.304
40	1962	.008	.103	.295	-.411
40	1963	.018	.098	.316	-.322
40	1964	.035	.101	.324	-.338
40	1965	.009	.121	.399	-.363
40	1966	.006	.107	.351	-.312
40	1967	.019	.101	.344	-.326
40	1968	.018	.112	.372	-.378
50	1101	.041	.101	.372	-.318
50	1102	.243	.156	.896	-.169
50	1103	.117	.112	.600	-.313
50	1104	.129	.112	.695	-.204
50	1105	.130	.120	.593	-.209
50	1106	.154	.133	.764	-.262
50	1107	.104	.113	.571	-.312
50	1108	.135	.111	.529	-.214
50	1109	.113	.124	.614	-.274
50	1110	.044	.111	.457	-.350
50	1111	.090	.137	.625	-.315
50	1112	.171	.122	.632	-.222
50	1113	.151	.123	.668	-.273
50	1114	.158	.110	.669	-.220
50	1115	.100	.117	.661	-.344
50	1116	.099	.101	.467	-.268
50	1117	.056	.111	.413	-.312
50	1118	.118	.144	.772	-.439
50	1119	.137	.116	.576	-.239
50	1120	.136	.117	.598	-.204
50	1121	.032	.105	.360	-.354
50	1122	.086	.114	.502	-.264
50	1123	.144	.110	.682	-.188
50	1124	.117	.105	.560	-.179
50	1125	.127	.108	.536	-.201
50	1126	.076	.101	.399	-.349
50	1201	-.018	.112	.366	-.347
50	1202	-.013	.125	.363	-.519
50	1203	.087	.134	.551	-.490
50	1204	.077	.138	.737	-.520
50	1205	.002	.126	.419	-.628
50	1206	.020	.128	479	-.475
50	1207	.024	.116	.428	-.385
50	1208	.004	.101	.319	-.312
50	1209	.018	.100	.365	-.447
50	1210	.013	.114	.351	-.418
50	1211	-.063	.100	.273	-.388
50	1212	-.070	.111	.280	-.494
50	1213	-.046	.107	.300	-.442
50	1214	.032	.112	.434	-.435
50	1215	.012	.096	.343	-.307
50	1216	-.011	.105	.306	-.362
50	1217	.066	.110	405	-.312
50	1218	.042	.112	.422	-.408
50	1219	.017	.110	.397	-.346
50	1220	.001	.099	.327	-.396
50	1221	.016	.096	.329	-.312
50	1222	.024	.106	.365	-.416
50	1223	.059	.116	.465	-.266
50	1224	.036	.086	.314	-.269
50	1225	.020	.102	.330	-.297
50	1226	.008	.103	.371	-.459
50	1227	014	.105	.357	-.297
50	1228	.063	.110	.400	-.405
50	1229	.119	.101	.525	-.186
50	1301	-.011	.124	.389	-.432
50	1302	.019	.112	.409	-.442
50	1303	- 005	.119	.408	-.457
50	1304	.031	.106	.400	-.363
50	1305	.024	.102	.404	-.454
50	1306	.031	.104	.349	-.334
50	1307	.032	.111	.365	-.456
50	1308	.037	.106	.391	-.336
50	1309	.027	.098	.351	-.312
50	1311	.036	.099	.363	- 346
50	1312	.034	.099	.387	-.349
50	1313	.043	.099	.365	-.269
50	1314	.045	.104	.368	-.318
50	1315	.018	.110	.353	- 410
50	1316	.014	.107	.416	-.339
50	1317	.040	.103	.394	-.276
50	1318	.020	.102	.348	-.353
50	1319	.036	.094	.382	-.299
50	1320	.034	.097	.436	-.280
50	1321	.039	.100	.426	-.282
50	1322	.033	.093	.387	-.355
50	1323	.018	.107	.409	-.372
50	1324	.044	.098	.391	-.335
50	1325	.046	.100	.348	-.294
50	1326	.047	.105	.345	-.362
50	1327	.038	.106	.396	-.279
50	1328	.035	.094	.318	- 277
50	1329	.018	.110	.353	-.336
50	1330	.017	.111	.405	-.418
50	1331	.001	.111	.398	-.435
50	1401	-.013	.108	.335	-.425
50	1402	-.056	.123	.448	-.512
50	1403	- 080	.111	.288	- 489
50	1404	-.035	.103	.289	-.346
50	1405	.030	.124	.426	-.379
50	1406	-.043	.115	.335	-.530
50	1407	-.009	.105	.324	-.395
50	1408	.024	.093	.281	-.310
50	1409	.096	.111	.520	-.237
50	1410	.128	.101	.519	-.217
50	1411	.004	.102	.393	-.379
50	1412	.029	.099	.374	-.267
50	1413	.051	094	.344	-.269
50	1414	.092	.125	.535	-.286
50	1415	.119	.122	.552	-.336
50	1416	.003	.106	.401	-.318
50	1417	.038	.092	.354	-.236
50	1418	.059	.112	.452	-.329
50	1419	.070	.112	.602	-.260
50	1420	.020	.110	.445	-.438
50	1421	.022	.117	.451	-.348
50	1422	- 036	.112	.300	-.439
50	1423	.010	.103	.305	-.350
50	1424	.011	.110	.349	- .397
50	1425	.055	.103	.403	-.291

WD	TAP	CPMEAN	CPRMS	CPMAX	CPMIN
50	1426	.070	.100	.410	-.245
50	1427	.046	.099	.435	-.340
50	1428	.056	.099	.364	-.351
50	1429	.056	.097	.394	-.247
50	1430	.060	.098	.442	-.331
50	1431	.060	.100	.384	-.232
50	1432	.069	.088	.370	-.251
50	1433	.041	.102	.382	-.275
50	1434	-.011	.109	.314	-.423
50	1435	.010	.104	.372	-.339
50	1901	.067	.106	.484	-.272
50	1902	.164	.112	.490	-.204
50	1903	.303	.098	.629	-.014
50	1904	.084	.101	.431	-.324
50	1905	.172	.096	.526	-.122
50	1906	.132	.102	.510	-.180
50	1907	.040	.104	.414	-.309
50	1908	.019	.112	.336	-.386
50	1909	-.009	.111	.292	-.473
50	1910	-.000	.108	.350	-.520
50	1911	.136	.116	.617	-.231
50	1912	.145	.115	.575	-.249
50	1913	.137	.132	.676	-.237
50	1914	.057	.109	.512	-.320
50	1915	.136	.118	.544	-.243
50	1916	.023	.110	.432	-.441
50	1917	.052	.100	.485	-.290
50	1918	.036	.114	.512	-.463
50	1919	.042	.106	.416	-.319
50	1920	.040	.107	.436	-.327
50	1921	.062	.101	.468	-.254
50	1922	.052	.112	.548	-.298
50	1923	.031	.123	.468	-.391
50	1924	.038	.107	.512	-.388
50	1925	.058	.121	.506	-.346
50	1926	.044	.114	.573	-.348
50	1927	.054	.105	.373	-.258
50	1928	.060	.100	.394	-.309
50	1929	.063	.098	.418	-.292
50	1930	.067	.102	.435	-.242
50	1931	.011	.104	.397	-.338
50	1932	.046	.095	.314	-.348
50	1933	.053	.097	.390	-.256
50	1934	.048	.097	.343	-.295
50	1935	.054	.109	.448	-.300
50	1936	.052	.104	.416	-.353
50	1937	.043	.106	.455	-.333
50	1938	.012	.109	.373	-.310
50	1939	.002	.105	.363	-.457
50	1940	.007	.104	.309	-.501

WD	TAP	CPMEAN	CPRMS	CPMAX	CPMIN
50	1941	.020	.100	.426	-.333
50	1942	.026	.101	.341	-.269
50	1943	.025	.090	.310	-.304
50	1944	.015	.083	.268	-.215
50	1945	.008	.102	.346	-.539
50	1946	.016	.106	.471	-.319
50	1947	.015	.118	.353	-.368
50	1948	.014	.100	.343	-.403
50	1949	-.027	.107	.308	-.366
50	1950	-.003	.100	.308	-.388
50	1951	.044	.107	.408	-.305
50	1952	.018	.100	.379	-.318
50	1953	.019	.095	.352	-.332
50	1954	.021	.096	.369	-.296
50	1955	.012	.099	.328	-.291
50	1956	.022	.103	.313	-.398
50	1957	.022	.095	.296	-.374
50	1958	.021	.096	.325	-.388
50	1959	.016	.109	.439	-.327
50	1960	.022	.103	.337	-.381
50	1961	.021	.105	.408	-.364
50	1962	.032	.108	.378	-.359
50	1963	.033	.099	.384	-.296
50	1964	.040	.097	.333	-.337
50	1965	.027	.094	.393	-.266
50	1966	.022	.102	.356	-.340
50	1967	.032	.099	.330	-.323
50	1968	.034	.098	.371	-.264
60	1101	.055	.106	.432	-.334
60	1102	.239	.162	.969	-.217
60	1103	.109	.114	.571	-.249
60	1104	.140	.112	.664	-.285
60	1105	.167	.130	.752	-.276
60	1106	.140	.129	.742	-.248
60	1107	.108	.109	.486	-.235
60	1108	.154	.116	.656	-.173
60	1109	.092	.115	.530	-.308
60	1110	.076	.113	.515	-.344
60	1111	.144	.125	.647	-.342
60	1112	.179	.136	.608	-.186
60	1113	.135	.125	.632	-.244
60	1114	.161	.122	.586	-.249
60	1115	.083	.107	.529	-.229
60	1116	.082	.110	.466	-.266
60	1117	.100	.109	.586	-.273
60	1118	.166	.149	.882	-.353
60	1119	.160	.117	.625	-.234
60	1120	.153	.116	.700	-.158
60	1121	.074	.114	.481	-.273
60	1122	.133	.127	.714	-.300

WD	TAP	CPMEAN	CPRMS	CPMAX	CPMIN
60	1123	.156	.116	.627	-.202
60	1124	.128	.106	.552	-.271
60	1125	.151	.118	.649	-.171
60	1126	.076	.110	.426	-.295
60	1201	.026	.095	.302	-.311
60	1202	.001	.118	.394	-.341
60	1203	.112	.133	.595	-.304
60	1204	.142	.139	.777	-.456
60	1205	.016	.116	.421	-.391
60	1206	.025	.119	.460	-.361
60	1207	.063	.108	.411	-.569
60	1208	.035	.119	.415	-.403
60	1209	.031	.096	.331	-.275
60	1210	.059	.109	.462	-.462
60	1211	.006	.113	.468	-.347
60	1212	-.011	.114	.345	-.517
60	1213	.006	.114	.399	-.344
60	1214	.041	.118	.428	-.416
60	1215	.043	.104	.440	-.285
60	1216	.003	.102	.308	-.322
60	1217	.096	.132	.554	-.402
60	1218	.088	.157	.602	-.598
60	1219	.095	.122	.683	-.286
60	1220	.018	.107	.373	-.435
60	1221	.037	.098	.337	-.345
60	1222	.069	.121	.443	-.468
60	1223	.114	.122	.585	-.298
60	1224	.039	.103	.371	-.293
60	1225	.042	.096	.345	-.322
60	1226	.031	.093	.398	-.244
60	1227	.067	.110	.517	-.357
60	1228	.125	.132	.575	-.298
60	1229	.154	.110	.569	-.180
60	1301	.018	.099	.296	-.341
60	1302	.026	.116	.426	-.436
60	1303	.013	.123	.387	-.487
60	1304	.038	.104	.416	-.430
60	1305	.037	.108	.385	-.309
60	1306	.038	.108	.399	-.369
60	1307	.040	.107	.397	-.376
60	1308	.030	.111	.409	-.323
60	1309	.033	.111	.378	-.277
60	1311	.047	.113	.455	-.302
60	1312	.046	.104	.402	-.265
60	1313	.047	.103	.407	-.265
60	1314	.058	.098	.351	-.287
60	1315	.027	.104	.341	-.340
60	1316	.026	.105	.368	-.295
60	1317	.055	.104	.424	-.258
60	1318	.032	.105	.362	-.273

WD	TAP	CPMEAN	CPRMS	CPMAX	CPMIN
60	1319	.044	.105	.416	-.293
60	1320	.043	.099	.398	-.346
60	1321	.045	.103	.432	-.310
60	1322	.040	.105	.340	-.347
60	1323	.027	.102	.374	-.305
60	1324	.066	.100	.384	-.222
60	1325	.053	.104	.379	-.301
60	1326	.047	.104	.401	-.351
60	1327	.047	.106	.399	-.330
60	1328	.043	.109	.364	-.252
60	1329	.028	.109	.372	-.293
60	1330	.039	.120	.430	-.360
60	1331	.033	.117	.416	-.337
60	1401	.011	.107	.339	-.379
60	1402	-.064	.113	.333	-.503
60	1403	-.054	.108	.261	-.458
60	1404	-.021	.104	.308	-.440
60	1405	.020	.122	.391	-.451
60	1406	-.017	.125	.393	-.467
60	1407	.002	.145	.409	-.677
60	1408	.033	.092	.381	-.261
60	1409	.077	.109	.516	-.406
60	1410	.128	.104	.532	-.256
60	1411	.010	.107	.346	-.435
60	1412	.033	.100	.396	-.289
60	1413	.029	.109	.422	-.357
60	1414	.074	.110	.578	-.339
60	1415	.120	.116	.591	-.232
60	1416	.004	.107	.365	-.536
60	1417	.033	.102	.354	-.367
60	1418	.063	.120	.455	-.321
60	1419	.066	.104	.411	-.235
60	1420	.038	.119	.419	-.355
60	1421	.042	.119	.454	-.354
60	1422	-.046	.115	.344	-.550
60	1423	-.008	.113	.397	-.419
60	1424	.018	.105	.366	-.298
60	1425	.043	.118	.439	-.462
60	1426	.065	.138	.505	-.512
60	1427	.034	.105	.477	-.409
60	1428	.052	.102	.375	-.457
60	1429	.058	.097	.410	-.294
60	1430	.065	.107	.431	-.276
60	1431	.070	.102	.429	-.240
60	1432	.067	.106	.441	-.299
60	1433	.045	.105	.411	-.257
60	1434	.010	.104	.356	-.401
60	1435	.035	.106	.405	-.358
60	1901	.046	.105	.386	-.432
60	1902	.144	.117	.615	-.227
60	1903	.304	.092	.662	-.006
60	1904	.068	.098	.404	-.317
60	1905	.152	.095	.500	-.156
60	1906	.117	.098	.454	-.179
60	1907	.050	.103	.377	-.330
60	1908	.039	.100	.395	-.375
60	1909	.019	.103	.362	-.352
60	1910	.033	.114	.447	-.504
60	1911	.136	.110	.532	-.249
60	1912	.136	.108	.532	-.229
60	1913	.106	.119	.477	-.305
60	1914	.029	.104	.464	-.350
60	1915	.128	.109	.587	-.226
60	1916	.046	.103	.459	-.352
60	1917	.064	.102	.434	-.347
60	1918	.070	.105	.410	-.246
60	1919	.071	.110	.410	-.325
60	1920	.080	.123	.467	-.332
60	1921	.048	.104	.395	-.335
60	1922	.046	.098	.432	-.339
60	1923	.040	.108	.385	-.357
60	1924	.049	.107	.370	-.334
60	1925	.055	.110	.451	-.336
60	1926	.088	.115	.536	-.408
60	1927	.054	.097	.407	-.247
60	1928	.065	.098	.380	-.227
60	1929	.071	.103	.409	-.242
60	1930	.080	.101	.439	-.228
60	1931	.030	.103	.370	-.297
60	1932	.067	.087	.355	-.252
60	1933	.041	.100	.400	-.334
60	1934	.058	.107	.411	-.305
60	1935	.063	.099	.362	-.287
60	1936	.056	.097	.372	-.267
60	1937	.061	.108	.427	-.327
60	1938	.024	.097	.375	-.322
60	1939	.008	.105	.320	-.361
60	1940	.022	.098	.354	-.366
60	1941	.027	.100	.385	-.334
60	1942	.036	.099	.382	-.267
60	1943	.027	.095	.286	-.295
60	1944	.014	.091	.271	-.315
60	1945	.020	.106	.414	-.351
60	1946	.026	.093	.318	-.279
60	1947	.025	.101	.374	-.307
60	1948	.017	.099	.323	-.332
60	1949	-.015	.092	.267	-.312
60	1950	.003	.101	.401	-.349
60	1951	.043	.095	.354	-.306
60	1952	.023	.094	.364	-.324
60	1953	.023	.099	.352	-.336
60	1954	.027	.096	.319	-.276
60	1955	.024	.103	.326	-.324
60	1956	.026	.094	.361	-.312
60	1957	.023	.099	.362	-.369
60	1958	.032	.106	.351	-.341
60	1959	.027	.098	.351	-.332
60	1960	.022	.096	.329	-.284
60	1961	.037	.101	.374	-.272
60	1962	.049	.091	.392	-.297
60	1963	.039	.093	.334	-.262
60	1964	.047	.093	.404	-.232
60	1965	.033	.098	.381	-.311
60	1966	.038	.099	.366	-.262
60	1967	.045	.100	.344	-.302
60	1968	.040	.104	.391	-.334
70	1101	.059	.103	.429	-.294
70	1102	.220	.153	.789	-.248
70	1103	.100	.108	.452	-.263
70	1104	.151	.126	.715	-.220
70	1105	.172	.119	.577	-.230
70	1106	.125	.127	.576	-.224
70	1107	.097	.107	.508	-.351
70	1108	.147	.113	.525	-.240
70	1109	.097	.108	.519	-.245
70	1110	.107	.112	.464	-.209
70	1111	.177	.126	.690	-.176
70	1112	.174	.135	.670	-.255
70	1113	.130	.122	.543	-.226
70	1114	.173	.117	.595	-.206
70	1115	.067	.109	.530	-.282
70	1116	.068	.103	.501	-.268
70	1117	.116	.120	.680	-.270
70	1118	.188	.138	.657	-.237
70	1119	.167	.119	.590	-.257
70	1120	.147	.112	.471	-.221
70	1121	.093	.105	.437	-.223
70	1122	.142	.115	.573	-.208
70	1123	.164	.116	.579	-.189
70	1124	.135	.115	.652	-.213
70	1125	.151	.112	.501	-.298
70	1126	.070	.109	.428	-.315
70	1201	.038	.104	.396	-.344
70	1202	.010	.117	.381	-.394
70	1203	.156	.133	.668	-.256
70	1204	.182	.129	.742	-.198
70	1205	.010	.122	.403	-.494
70	1206	.030	.126	.460	-.396
70	1207	.086	.119	.531	-.318
70	1208	.061	.110	.410	-.286

WD	TAP	CPMEAN	CPRMS	CPMAX	CPMIN
70	1209	.034	.104	.355	-.286
70	1210	.101	.103	.435	-.269
70	1211	.042	.117	.503	-.321
70	1212	.061	.111	.393	-.361
70	1213	.055	.112	.472	-.333
70	1214	.055	.119	.386	-.415
70	1215	.061	.099	.406	-.301
70	1216	.030	.094	.317	-.257
70	1217	.143	.109	.562	-.252
70	1218	.123	.105	.527	-.187
70	1219	.114	.124	.542	-.330
70	1220	.062	.122	.503	-.355
70	1221	.049	.117	.423	-.403
70	1222	.109	.119	.649	-.392
70	1223	.144	.121	.587	-.221
70	1224	.051	.100	.353	-.306
70	1225	.059	.101	.368	-.259
70	1226	.052	.105	.514	-.269
70	1227	.116	.115	.560	-.224
70	1228	.151	.116	.492	-.232
70	1229	.144	.115	.577	-.232
70	1301	.038	.122	.401	-.353
70	1302	.027	.118	.375	-.404
70	1303	.016	.126	.364	-.462
70	1304	.031	.106	.369	-.424
70	1305	.030	.100	.384	-.334
70	1306	.046	.099	.343	-.295
70	1307	.041	.103	.433	-.320
70	1308	.030	.117	.433	-.301
70	1309	.034	.111	.389	-.351
70	1311	.058	.101	.364	-.283
70	1312	.047	.105	.384	-.281
70	1313	.049	.100	.457	-.340
70	1314	.051	.110	.449	-.276
70	1315	.041	.120	.472	-.307
70	1316	.043	.115	.406	-.361
70	1317	.058	.099	.408	-.237
70	1318	.036	.104	.389	-.292
70	1319	.039	.096	.401	-.262
70	1320	.039	.102	.392	-.275
70	1321	.044	.101	.336	-.346
70	1322	.042	.103	.357	-.331
70	1323	.044	.107	.370	-.448
70	1324	.072	.097	.390	-.265
70	1325	.061	.095	.343	-.267
70	1326	.051	.100	.446	-.302
70	1327	.048	.100	.368	-.329
70	1328	.049	.108	.368	-.335
70	1329	.045	.108	.380	-.324
70	1330	.056	.117	.433	-.341
70	1331	.057	.115	.430	-.311
70	1401	.030	.111	.347	-.342
70	1402	-.063	.106	.276	-.492
70	1403	-.040	.090	.254	-.351
70	1404	-.016	.096	.329	-.405
70	1405	.001	.126	.411	-.404
70	1406	-.014	.102	.351	-.441
70	1407	.016	.097	.346	-.285
70	1408	.039	.100	.322	-.306
70	1409	.065	.112	.446	-.341
70	1410	.119	.126	.671	-.306
70	1411	.012	.103	.344	-.401
70	1412	.024	.098	.386	-.251
70	1413	.035	.102	.309	-.313
70	1414	.062	.110	.404	-.493
70	1415	.099	.110	.578	-.253
70	1416	.003	.101	.327	-.328
70	1417	.032	.098	.351	-.246
70	1418	.059	.115	.439	-.314
70	1419	.063	.108	.414	-.292
70	1420	.050	.116	.408	-.334
70	1421	.048	.112	.421	-.425
70	1422	-.062	.100	.251	-.518
70	1423	-.018	.103	.293	-.442
70	1424	.020	.097	.330	-.333
70	1425	.043	.094	.385	-.328
70	1426	.070	.095	.407	-.214
70	1427	.028	.107	.393	-.311
70	1428	.043	.114	.387	-.397
70	1429	.052	.116	.459	-.419
70	1430	.055	.108	.395	-.357
70	1431	.059	.098	.422	-.222
70	1432	.070	.101	.362	-.234
70	1433	.046	.099	.353	-.240
70	1434	.019	.105	.340	-.407
70	1435	.050	.101	.420	-.296
70	1901	.034	.105	.348	-.386
70	1902	.124	.108	.464	-.314
70	1903	.306	.082	.632	.016
70	1904	.038	.108	.338	-.406
70	1905	.156	.106	.504	-.183
70	1906	.128	.116	.561	-.255
70	1907	.055	.101	.380	-.266
70	1908	.050	.096	.352	-.346
70	1909	.049	.111	.472	-.353
70	1910	.060	.118	.414	-.393
70	1911	.133	.133	.581	-.281
70	1912	.130	.136	.576	-.354
70	1913	.093	.124	.550	-.313
70	1914	.006	.105	.295	-.385
70	1915	.116	.107	.461	-.230
70	1916	.048	.111	.454	-.370
70	1917	.063	.101	.387	-.338
70	1918	.078	.111	.410	-.307
70	1919	.082	.112	.427	-.463
70	1920	.126	.120	.499	-.229
70	1921	.033	.101	.342	-.326
70	1922	.038	.108	.417	-.366
70	1923	.053	.129	.462	-.420
70	1924	.063	.120	.442	-.328
70	1925	.050	.122	.494	-.368
70	1926	.126	.117	.593	-.235
70	1927	.055	.086	.344	-.248
70	1928	.068	.105	.504	-.273
70	1929	.080	.111	.480	-.302
70	1930	.085	.116	.465	-.292
70	1931	.050	.105	.376	-.278
70	1932	.096	.090	.462	-.206
70	1933	.048	.107	.416	-.329
70	1934	.056	.112	.396	-.327
70	1935	.062	.120	.445	-.309
70	1936	.055	.132	.519	-.435
70	1937	.053	.115	.428	-.391
70	1938	.041	.110	.393	-.412
70	1939	.038	.110	.421	-.305
70	1940	.028	.102	.440	-.359
70	1941	.023	.100	.361	-.356
70	1942	.030	.108	.393	-.348
70	1943	.029	.095	.319	-.456
70	1944	.017	.100	.346	-.299
70	1945	.015	.103	.341	-.366
70	1946	.017	.106	.448	-.402
70	1947	.023	.124	.367	-.348
70	1948	.016	.117	.362	-.358
70	1949	-.001	.109	.322	-.447
70	1950	.015	.099	.317	-.369
70	1951	.049	.086	.342	-.270
70	1952	.018	.101	.330	-.366
70	1953	.026	.106	.365	-.401
70	1954	.034	.105	.396	-.317
70	1955	.018	.098	.293	-.363
70	1956	.043	.098	.372	-.304
70	1957	.033	.109	.433	-.391
70	1958	.035	.113	.362	-.421
70	1959	.027	.119	.374	-.359
70	1960	.023	.131	.438	-.432
70	1961	.054	.102	.412	-.321
70	1962	.057	.099	.354	-.331
70	1963	.043	.095	.338	-.230
70	1964	.044	.101	.456	-.326

WD	TAP	CPMEAN	CPRMS	CPMAX	CPMIN
70	1965	.034	.099	.344	-.336
70	1966	.035	.108	.394	-.329
70	1967	.056	.101	.386	-.482
70	1968	.049	.110	.434	-.324
80	1101	.062	.112	.427	-.304
80	1102	.200	.152	.772	-.190
80	1103	.093	.114	.533	-.314
80	1104	.129	.123	.710	-.327
80	1105	.154	.128	.596	-.276
80	1106	.096	.119	.508	-.275
80	1107	.084	.101	.499	-.255
80	1108	.144	.118	.532	-.209
80	1109	.077	.103	.523	-.259
80	1110	.139	.122	.589	-.212
80	1111	.210	.133	.748	-.171
80	1112	.176	.127	.684	-.198
80	1113	.107	.120	.539	-.278
80	1114	.175	.120	.630	-.198
80	1115	.051	.109	.403	-.314
80	1116	.069	.110	.438	-.290
80	1117	.144	.136	.754	-.283
80	1118	.196	.140	.740	-.288
80	1119	.147	.130	.681	-.197
80	1120	.132	.118	.641	-.205
80	1121	.116	.114	.540	-.210
80	1122	.148	.118	.541	-.195
80	1123	.140	.121	.625	-.329
80	1124	.117	.115	.532	-.315
80	1125	.148	.116	.599	-.193
80	1126	.060	.104	.367	-.336
80	1201	.054	.105	.463	-.365
80	1202	-.007	.118	.399	-.449
80	1203	.168	.128	.654	-.291
80	1204	.222	.138	.666	-.160
80	1205	-.004	.122	.392	-.607
80	1206	.043	.126	.506	-.393
80	1207	.100	.129	.577	-.336
80	1208	.089	.098	.421	-.222
80	1209	.073	.101	.486	-.251
80	1210	.124	.115	.504	-.300
80	1211	.070	.106	.488	-.238
80	1212	.090	.109	.490	-.243
80	1213	.103	.124	.526	-.291
80	1214	.059	.110	.449	-.344
80	1215	.091	.105	.531	-.258
80	1216	.055	.099	.386	-.272
80	1217	.154	.116	.581	-.218
80	1218	.156	.111	.528	-.245
80	1219	.156	.130	.651	-.294
80	1220	.102	.103	.541	-.232
80	1221	.084	.105	.424	-.205
80	1222	.124	.112	.554	-.237
80	1223	.149	.119	.587	-.195
80	1224	.048	.098	.365	-.312
80	1225	.073	.101	.381	-.264
80	1226	.098	.104	.466	-.301
80	1227	.135	.116	.732	-.207
80	1228	.151	.104	.577	-.224
80	1229	.145	.098	.515	-.168
80	1301	.029	.116	.397	-.410
80	1302	.014	.108	.401	-.370
80	1303	-.016	.121	.385	-.480
80	1304	.035	.102	.377	-.314
80	1305	.046	.113	.429	-.310
80	1306	.037	.102	.445	-.315
80	1307	.042	.106	.452	-.266
80	1308	.016	.113	.395	-.359
80	1309	.031	.109	.367	-.327
80	1311	.068	.102	.428	-.286
80	1312	.042	.112	.386	-.326
80	1313	.058	.108	.417	-.321
80	1314	.044	.116	.393	-.425
80	1315	.084	.117	.482	-.258
80	1316	.068	.113	.475	-.287
80	1317	.067	.100	.416	-.300
80	1318	.035	.104	.376	-.356
80	1319	.040	.106	.386	-.343
80	1320	.037	.103	.444	-.341
80	1321	.034	.109	.438	-.264
80	1322	.036	.102	.310	-.395
80	1323	.074	.103	.393	-.289
80	1324	.083	.109	.426	-.263
80	1325	.061	.098	.464	-.294
80	1326	.049	.103	.463	-.247
80	1327	.041	.101	.384	-.320
80	1328	.049	.106	.377	-.318
80	1329	.065	.115	.395	-.292
80	1330	.070	.107	.442	-.293
80	1331	.056	.105	.432	-.322
80	1401	.025	.103	.338	-.359
80	1402	-.053	.099	.211	-.401
80	1403	-.032	.096	.350	-.371
80	1404	-.012	.096	.301	-.431
80	1405	-.005	.116	.350	-.436
80	1406	-.019	.104	.358	-.436
80	1407	-.001	.110	.318	-.390
80	1408	.040	.100	.358	-.300
80	1409	.058	.096	.453	-.294
80	1410	.095	.090	.400	-.240
80	1411	.011	.097	.344	-.295
80	1412	.025	.102	.363	-.322
80	1413	.028	.102	.385	-.359
80	1414	.052	.101	.375	-.340
80	1415	.062	.101	.489	-.275
80	1416	.005	.100	.310	-.346
80	1417	.025	.083	.285	-.291
80	1418	.059	.103	.433	-.294
80	1419	.069	.106	.457	-.273
80	1420	.056	.107	.444	-.314
80	1421	.059	.111	.467	-.370
80	1422	-.051	.102	.365	-.374
80	1423	-.014	.103	.341	-.359
80	1424	.017	.097	.323	-.291
80	1425	.041	.097	.414	-.323
80	1426	.066	.099	.344	-.288
80	1427	.014	.104	.346	-.353
80	1428	.039	.092	.351	-.289
80	1429	.047	.089	.381	-.264
80	1430	.051	.097	.370	-.249
80	1431	.056	.103	.379	-.273
80	1432	.063	.097	.384	-.304
80	1433	.058	.099	.409	-.294
80	1434	.028	.097	.406	-.321
80	1435	.058	.101	.370	-.320
80	1901	.026	.105	.324	-.296
80	1902	.102	.110	.428	-.325
80	1903	.294	.096	.637	-.030
80	1904	.030	.113	.416	-.510
80	1905	.141	.102	.448	-.200
80	1906	.116	.104	.544	-.271
80	1907	.056	.103	.324	-.308
80	1908	.045	.103	.382	-.338
80	1909	.070	.102	.426	-.232
80	1910	.075	.119	.441	-.417
80	1911	.128	.112	.509	-.209
80	1912	.117	.110	.483	-.296
80	1913	.063	.107	.435	-.303
80	1914	-.013	.096	.315	-.357
80	1915	.101	.102	.460	-.225
80	1916	.043	.101	.440	-.286
80	1917	.056	.111	.387	-.320
80	1918	.075	.104	.430	-.289
80	1919	.057	.121	.504	-.404
80	1920	.148	.118	.601	-.301
80	1921	.029	.108	.372	-.374
80	1922	.035	.112	.362	-.400
80	1923	.041	.129	.457	-.498
80	1924	.049	.110	.426	-.291
80	1925	.013	.126	.468	-.485
80	1926	.159	.122	.643	-.230

WD	TAP	CPMEAN	CPRMS	CPMAX	CPMIN
80	1927	.054	.106	.426	-.274
80	1928	.079	.105	.411	-.263
80	1929	.064	.113	.475	-.358
80	1930	.069	.104	.370	-.353
80	1931	.079	.107	.461	-.304
80	1932	.135	.103	.524	-.143
80	1933	.048	.097	.370	-.248
80	1934	.060	.109	.421	-.313
80	1935	.063	.103	.407	-.275
80	1936	.047	.103	.434	-.341
80	1937	.030	.112	.373	-.450
80	1938	.066	.109	.507	-.247
80	1939	.082	.112	.522	-.299
80	1940	.036	.101	.390	-.297
80	1941	.028	.110	.414	-.348
80	1942	.025	.105	.338	-.341
80	1943	.010	.108	.348	-.367
80	1944	.001	.100	.312	-.455
80	1945	.024	.109	.397	-.370
80	1946	.019	.103	.341	-.419
80	1947	.020	.121	.392	-.472
80	1948	-.010	.112	.328	-.389
80	1949	.016	.102	.319	-.393
80	1950	.036	.106	.355	-.300
80	1951	.059	.105	.427	-.258
80	1952	.031	.107	.400	-.412
80	1953	.023	.108	.306	-.368
80	1954	.022	.098	.302	-.392
80	1955	-.003	.107	.299	-.446
80	1956	.067	.104	.387	-.295
80	1957	.034	.099	.380	-.344
80	1958	.030	.110	.382	-.462
80	1959	.029	.105	.333	-.268
80	1960	.009	.106	.346	-.473
80	1961	.069	.104	.478	-.365
80	1962	.061	.098	.554	-.236
80	1963	.043	.092	.360	-.267
80	1964	.046	.097	.395	-.290
80	1965	.033	.108	.378	-.324
80	1966	.030	.104	.329	-.353
80	1967	.047	.107	.421	-.349
80	1968	.037	.108	.379	-.424
90	1101	.044	.107	.423	-.310
90	1102	.159	.159	.869	-.317
90	1103	.077	.108	.477	-.343
90	1104	.099	.117	.532	-.335
90	1105	.128	.133	.557	-.398
90	1106	.070	.120	.484	-.367
90	1107	.055	.109	.427	-.294
90	1108	.125	.123	.566	-.261
90	1109	.053	.107	.383	-.356
90	1110	.159	.126	.631	-.266
90	1111	.186	.118	.627	-.167
90	1112	.118	.122	.463	-.368
90	1113	.068	.110	.477	-.274
90	1114	.147	.122	.564	-.258
90	1115	.031	.104	.423	-.308
90	1116	.044	.105	.432	-.375
90	1117	.169	.112	.770	-.206
90	1118	.174	.139	.814	-.287
90	1119	.099	.128	.539	-.358
90	1120	.111	.110	.519	-.293
90	1121	.142	.107	.579	-.191
90	1122	.138	.114	.612	-.230
90	1123	.121	.110	.590	-.204
90	1124	.097	.109	.482	-.275
90	1125	.137	.113	.632	-.245
90	1126	.041	.106	.391	-.300
90	1201	.064	.103	.390	-.325
90	1202	-.036	.138	.474	-.560
90	1203	.217	.162	.893	-.242
90	1204	.206	.140	.741	-.179
90	1205	-.032	.149	.491	-.555
90	1206	.097	.151	.754	-.314
90	1207	.112	.114	.645	-.259
90	1208	.109	.117	.544	-.261
90	1209	.093	.110	.523	-.305
90	1210	.132	.113	.498	-.235
90	1211	.064	.128	.617	-.281
90	1212	.081	.116	.544	-.279
90	1213	.092	.120	.519	-.294
90	1214	.057	.110	.451	-.382
90	1215	.093	.121	.568	-.299
90	1216	.065	.099	.410	-.269
90	1217	.162	.106	.519	-.186
90	1218	.176	.113	.609	-.215
90	1219	.179	.124	.748	-.223
90	1220	.112	.122	.572	-.379
90	1221	.099	.108	.434	-.284
90	1222	.149	.119	.680	-.227
90	1223	.170	.119	.630	-.205
90	1224	.042	.098	.351	-.284
90	1225	.100	.111	.431	-.235
90	1226	.108	.112	.513	-.233
90	1227	.143	.122	.583	-.227
90	1228	.149	.119	.627	-.230
90	1229	.135	.114	.629	-.232
90	1301	.013	.090	.295	-.319
90	1302	-.020	.107	.333	-.411
90	1303	-.037	.118	.347	-.504
90	1304	.019	.112	.472	-.388
90	1305	.048	.124	.449	-.380
90	1306	.027	.108	.386	-.391
90	1307	.034	.108	.486	-.331
90	1308	.015	.117	.361	-.396
90	1309	.010	.111	.321	-.366
90	1311	.064	.112	.422	-.255
90	1312	.033	.105	.440	-.324
90	1313	.042	.103	.430	-.331
90	1314	.039	.097	.329	-.290
90	1315	.082	.101	.464	-.221
90	1316	.078	.115	.457	-.253
90	1317	.060	.099	.476	-.292
90	1318	.035	.099	.332	-.283
90	1319	.035	.099	.370	-.377
90	1320	.026	.107	.414	-.321
90	1321	.025	.098	.316	-.397
90	1322	.024	.104	.350	-.306
90	1323	.086	.118	.525	-.328
90	1324	.075	.116	.441	-.286
90	1325	.053	.104	.374	-.340
90	1326	.045	.105	.454	-.310
90	1327	.036	.100	.342	-.291
90	1328	.036	.107	.343	-.326
90	1329	.093	.114	.441	-.281
90	1330	.065	.115	.452	-.330
90	1331	.050	.114	.424	-.341
90	1401	.017	.104	.358	-.325
90	1402	-.086	.096	.192	-.374
90	1403	-.055	.106	.288	-.371
90	1404	-.038	.107	.325	-.382
90	1405	-.019	.103	.333	-.393
90	1406	-.036	.109	.385	-.553
90	1407	-.023	.102	.317	-.402
90	1408	.036	.095	.341	-.309
90	1409	.030	.105	.393	-.403
90	1410	.073	.103	.460	-.261
90	1411	-.007	.104	.390	-.395
90	1412	.013	.105	.357	-.345
90	1413	.027	.101	.357	-.308
90	1414	.039	.107	.379	-.269
90	1415	.052	.112	.429	-.314
90	1416	-.006	.113	.345	-.415
90	1417	.011	.099	.332	-.283
90	1418	.048	.113	.411	-.341
90	1419	.059	.105	.402	-.294
90	1420	.047	.114	.417	-.347
90	1421	.065	.115	.447	-.419
90	1422	-.087	.115	.236	-.456
90	1423	-.030	.115	.344	-.386

WD	TAP	CPMEAN	CPRMS	CPMAX	CPMIN
90	1424	-.004	.093	.344	-.327
90	1425	.033	.096	.392	-.287
90	1426	.054	.093	.359	-.279
90	1427	.006	.104	.332	-.409
90	1428	.016	.103	.383	-.409
90	1429	.037	.101	.369	-.291
90	1430	.038	.106	.423	-.338
90	1431	.050	.104	.388	-.281
90	1432	.061	.099	.396	-.289
90	1433	.050	.099	.476	-.346
90	1434	.002	.116	.405	-.445
90	1435	.048	.113	.421	-.345
90	1901	.005	.099	.274	-.294
90	1902	.093	.114	.415	-.474
90	1903	.282	.097	.590	-.052
90	1904	.005	.103	.294	-.439
90	1905	.137	.098	.443	-.198
90	1906	.098	.101	.536	-.279
90	1907	.045	.102	.385	-.294
90	1908	.042	.104	.420	-.343
90	1909	.068	.104	.376	-.304
90	1910	.072	.114	.395	-.348
90	1911	.123	.113	.626	-.213
90	1912	.093	.103	.464	-.229
90	1913	.037	.103	.405	-.319
90	1914	-.019	.098	.284	-.334
90	1915	.097	.107	.470	-.212
90	1916	.033	.110	.467	-.336
90	1917	.042	.096	.344	-.294
90	1918	.060	.109	.411	-.296
90	1919	.035	.112	.453	-.410
90	1920	.158	.118	.506	-.260
90	1921	.019	.104	.346	-.299
90	1922	.043	.107	.405	-.341
90	1923	.057	.098	.383	-.365
90	1924	.033	.109	.440	-.385
90	1925	-.013	.125	.408	-.516
90	1926	.142	.122	.733	-.205
90	1927	.038	.106	.359	-.308
90	1928	.063	.099	.359	-.308
90	1929	.063	.105	.381	-.288
90	1930	.047	.104	.520	-.286
90	1931	.102	.109	.526	-.207
90	1932	.151	.106	.599	-.181
90	1933	.040	.101	.347	-.288
90	1934	.048	.103	.354	-.366
90	1935	.053	.109	.504	-.290
90	1936	.033	.098	.350	-.276
90	1937	-.000	.115	.364	-.523
90	1938	.091	.110	.487	-.247
90	1939	.111	.123	.591	-.281
90	1940	.028	.110	.416	-.373
90	1941	.016	.106	.316	-.322
90	1942	.022	.112	.330	-.310
90	1943	.005	.095	.291	-.337
90	1944	-.020	.093	.288	-.317
90	1945	.025	.107	.338	-.356
90	1946	.020	.104	.362	-.323
90	1947	.010	.097	.320	-.357
90	1948	-.022	.119	.354	-.467
90	1949	.036	.104	.390	-.297
90	1950	.054	.108	.402	-.312
90	1951	.048	.107	.375	-.308
90	1952	.032	.098	.348	-.266
90	1953	.028	.102	.371	-.293
90	1954	.017	.102	.508	-.293
90	1955	-.027	.108	.289	-.376
90	1956	.081	.105	.420	-.283
90	1957	.025	.103	.368	-.313
90	1958	.019	.104	.339	-.315
90	1959	.016	.112	.410	-.432
90	1960	-.008	.104	.307	-.325
90	1961	.084	.096	.395	-.199
90	1962	.079	.109	.444	-.258
90	1963	.040	.098	.359	-.244
90	1964	.038	.107	.417	-.339
90	1965	.019	.095	.307	-.302
90	1966	.028	.111	.343	-.327
90	1967	.033	.099	.326	-.329
90	1968	.022	.102	.358	-.389
100	1101	.015	.105	.353	-.335
100	1102	.095	.166	.700	-.441
100	1103	.041	.114	.426	-.460
100	1104	.050	.114	.408	-.408
100	1105	.067	.132	.499	-.423
100	1106	.035	.115	.395	-.348
100	1107	.023	.101	.383	-.299
100	1108	.089	.117	.650	-.299
100	1109	.036	.098	.331	-.335
100	1110	.157	.123	.763	-.265
100	1111	.180	.131	.725	-.216
100	1112	.062	.117	.540	-.448
100	1113	.036	.112	.361	-.345
100	1114	.141	.122	.629	-.242
100	1115	.018	.098	.296	-.400
100	1116	.021	.099	.361	-.292
100	1117	.144	.115	.607	-.305
100	1118	.159	.143	.870	-.244
100	1119	.038	.148	.624	-.455
100	1120	.072	.103	.399	-.362
100	1121	.133	.114	.585	-.184
100	1122	.116	.121	.547	-.217
100	1123	.085	.114	.487	-.275
100	1124	.072	.100	.477	-.264
100	1125	.118	.102	.482	-.297
100	1126	.029	.118	.410	-.396
100	1201	.045	.098	.387	-.254
100	1202	-.056	.135	.418	-.589
100	1203	.206	.158	.924	-.253
100	1204	.154	.151	.748	-.313
100	1205	-.037	.142	.414	-.682
100	1206	.101	.143	.708	-.316
100	1207	.082	.119	.534	-.318
100	1208	.110	.114	.556	-.254
100	1209	.099	.121	.491	-.309
100	1210	.143	.117	.607	-.187
100	1211	.052	.142	.527	-.574
100	1212	.086	.119	.549	-.265
100	1213	.101	.120	.602	-.248
100	1214	.054	.120	.416	-.402
100	1215	.117	.139	.643	-.373
100	1216	.084	.118	.736	-.265
100	1217	.178	.141	.917	-.212
100	1218	.155	.115	.681	-.185
100	1219	.157	.138	.604	-.227
100	1220	.140	.126	.758	-.202
100	1221	.114	.105	.489	-.203
100	1222	.154	.110	.551	-.217
100	1223	.126	.119	.519	-.241
100	1224	.050	.125	.457	-.383
100	1225	.098	.108	.436	-.316
100	1226	.127	.116	.674	-.261
100	1227	.141	.107	.510	-.212
100	1228	.118	.113	.532	-.251
100	1229	.116	.116	.602	-.229
100	1301	-.009	.112	.382	-.355
100	1302	-.047	.115	.315	-.466
100	1303	-.056	.128	.332	-.544
100	1304	.002	.108	.348	-.377
100	1305	.044	.117	.435	-.305
100	1306	.024	.109	.327	-.369
100	1307	.028	.102	.397	-.346
100	1308	-.002	.114	.364	-.392
100	1309	-.010	.106	.422	-.352
100	1311	.072	.111	.506	-.302
100	1312	.031	.103	.363	-.428
100	1313	.033	.100	.337	-.304
100	1314	.029	.101	.430	-.300
100	1315	.090	.112	.489	-.219
100	1316	.108	.117	.527	-.322

WD	TAP	CPMEAN	CPRMS	CPMAX	CPMIN	WD	TAP	CPMEAN	CPRMS	CPMAX	CPMIN	WD	TAP	CPMEAN	CPRMS	CPMAX	CPMIN
100	1317	.066	.100	.444	-.279	100	1901	-.010	.100	.344	-.299	100	1951	.042	.102	.359	-.336
100	1318	.019	.096	.346	-.298	100	1902	.093	.102	.400	-.334	100	1952	.041	.099	.384	-.300
100	1319	.025	.102	.381	-.290	100	1903	.267	.090	.568	-.042	100	1953	.025	.098	.369	-.350
100	1320	.015	.107	.431	-.385	100	1904	.002	.103	.359	-.441	100	1954	.007	.099	.318	-.366
100	1321	.006	.102	.351	-.408	100	1905	.126	.097	.486	-.281	100	1955	-.044	.105	.358	-.499
100	1322	.011	.120	.409	-.438	100	1906	.082	.100	.431	-.242	100	1956	.084	.112	.498	-.386
100	1323	.090	.120	.512	-.295	100	1907	.024	.095	.372	-.284	100	1957	.013	.096	.334	-.335
100	1324	.062	.110	.451	-.310	100	1908	.021	.103	.355	-.458	100	1958	.014	.110	.329	-.360
100	1325	.050	.100	.356	-.293	100	1909	.054	.094	.407	-.298	100	1959	.017	.108	.445	-.432
100	1326	.040	.100	.409	-.266	100	1910	.063	.124	.453	-.334	100	1960	-.018	.109	.305	-.369
100	1327	.017	.102	.349	-.315	100	1911	.089	.106	.477	-.349	100	1961	.097	.126	.594	-.361
100	1328	.028	.106	.439	-.303	100	1912	.073	.108	.451	-.322	100	1962	.082	.110	.492	-.263
100	1329	.087	.126	.499	-.372	100	1913	.022	.121	.425	-.431	100	1963	.026	.103	.314	-.356
100	1330	.052	.113	.499	-.306	100	1914	-.040	.110	.380	-.411	100	1964	.028	.096	.313	-.336
100	1331	.032	.112	.446	-.332	100	1915	.071	.110	.512	-.284	100	1965	.012	.107	.382	-.331
100	1401	-.000	.095	.273	-.287	100	1916	.013	.098	.294	-.370	100	1966	.017	.106	.379	-.356
100	1402	-.103	.106	.202	-.492	100	1917	.022	.109	.382	-.354	100	1967	.025	.110	.392	-.376
100	1403	-.070	.101	.220	-.380	100	1918	.038	.104	.375	-.382	100	1968	-.007	.115	.331	-.474
100	1404	-.058	.120	.368	-.480	100	1919	.013	.129	.519	-.411	110	1101	-.010	.109	.339	-.416
100	1405	-.027	.118	.334	-.500	100	1920	.153	.127	.692	-.235	110	1102	.006	.164	.686	-.595
100	1406	-.048	.126	.321	-.494	100	1921	.008	.103	.347	-.322	110	1103	-.003	.115	.403	-.608
100	1407	-.021	.101	.295	-.368	100	1922	.031	.102	.403	-.304	110	1104	-.011	.113	.341	-.473
100	1408	.019	.111	.419	-.367	100	1923	.040	.114	.408	-.273	110	1105	-.002	.131	.484	-.519
100	1409	.021	.096	.370	-.314	100	1924	.012	.098	.352	-.337	110	1106	-.001	.114	.364	-.424
100	1410	.047	.096	.458	-.356	100	1925	-.057	.129	.325	-.585	110	1107	-.003	.102	.341	-.339
100	1411	-.017	.100	.331	-.368	100	1926	.122	.117	.515	-.226	110	1108	.067	.112	.458	-.335
100	1412	-.001	.101	.376	-.331	100	1927	.033	.099	.329	-.316	110	1109	.016	.099	.313	-.253
100	1413	.021	.126	.422	-.470	100	1928	.058	.100	.407	-.346	110	1110	.137	.117	.617	-.224
100	1414	.018	.104	.351	-.421	100	1929	.049	.103	.448	-.367	110	1111	.169	.124	.664	-.206
100	1415	.024	.104	.470	-.324	100	1930	.023	.101	.342	-.344	110	1112	.030	.136	.448	-.511
100	1416	-.021	.103	.346	-.365	100	1931	.114	.108	.556	-.236	110	1113	.011	.103	.440	-.344
100	1417	-.004	.099	.312	-.322	100	1932	.141	.107	.486	-.289	110	1114	.094	.117	.604	-.263
100	1418	.029	.110	.435	-.298	100	1933	.033	.094	.347	-.331	110	1115	.007	.099	.359	-.424
100	1419	.061	.106	.494	-.256	100	1934	.048	.108	.382	-.308	110	1116	.016	.098	.344	-.266
100	1420	.034	.113	.465	-.297	100	1935	.042	.102	.447	-.412	110	1117	.146	.127	.604	-.234
100	1421	.051	.120	.423	-.603	100	1936	.023	.103	.344	-.331	110	1118	.094	.143	.629	-.394
100	1422	-.103	.117	.232	-.618	100	1937	-.026	.130	.380	-.527	110	1119	-.003	.136	.576	-.518
100	1423	-.044	.124	.369	-.496	100	1938	.102	.115	.573	-.294	110	1120	.036	.109	.372	-.396
100	1424	-.009	.108	.350	-.462	100	1939	.111	.117	.535	-.236	110	1121	.111	.105	.440	-.202
100	1425	.027	.116	.422	-.349	100	1940	.028	.098	.305	-.334	110	1122	.073	.111	.450	-.422
100	1426	.047	.094	.360	-.249	100	1941	.024	.111	.385	-.359	110	1123	.045	.112	.581	-.425
100	1427	-.016	.115	.413	-.436	100	1942	.013	.108	.370	-.364	110	1124	.036	.097	.343	-.291
100	1428	.015	.098	.389	-.289	100	1943	-.005	.110	.372	-.364	110	1125	.086	.102	.431	-.220
100	1429	.027	.094	.283	-.246	100	1944	-.038	.104	.247	-.456	110	1126	.014	.110	.376	-.295
100	1430	.028	.099	.405	-.266	100	1945	.027	.106	.385	-.313	110	1201	.035	.100	.473	-.325
100	1431	.036	.101	.420	-.292	100	1946	.021	.100	.382	-.321	110	1202	-.068	.164	.410	-.702
100	1432	.056	.123	.551	-.371	100	1947	.006	.113	.367	-.318	110	1203	.237	.168	.917	-.332
100	1433	.045	.096	.372	-.278	100	1948	-.033	.106	.289	-.399	110	1204	.135	.148	.679	-.442
100	1434	.001	.111	.367	-.352	100	1949	.049	.122	.502	-.361	110	1205	-.057	.175	.439	-.816
100	1435	.039	.103	.410	-.379	100	1950	.071	.107	.475	-.245	110	1206	.120	.159	.774	-.667

WD	TAP	CPMEAN	CPRMS	CPMAX	CPMIN
110	1207	.061	.130	.634	-.330
110	1208	.113	.114	.657	-.272
110	1209	.091	.104	.511	-.295
110	1210	.130	.120	.677	-.285
110	1211	.046	.114	.470	-.342
110	1212	.070	.112	.486	-.264
110	1213	.104	.119	.556	-.322
110	1214	.048	.130	.609	-.418
110	1215	.114	.108	.564	-.217
110	1216	.077	.096	.428	-.237
110	1217	.149	.122	.577	-.158
110	1218	.158	.112	.589	-.174
110	1219	.151	.120	.589	-.222
110	1220	.112	.117	.546	-.267
110	1221	.103	.102	.455	-.237
110	1222	.147	.106	.531	-.214
110	1223	.115	.121	.501	-.252
110	1224	.046	.107	.458	-.269
110	1225	.091	.101	.420	-.270
110	1226	.106	.109	.430	-.217
110	1227	.150	.110	.549	-.206
110	1228	.110	.113	.463	-.232
110	1229	.101	.100	.398	-.270
110	1301	-.031	.107	.311	-.543
110	1302	-.072	.130	.372	-.538
110	1303	-.074	.138	.347	-.597
110	1304	-.016	.111	.394	-.452
110	1305	.041	.113	.427	-.377
110	1306	.008	.103	.345	-.490
110	1307	.010	.104	.369	-.353
110	1308	-.017	.119	.342	-.528
110	1309	-.024	.119	.348	-.515
110	1311	.069	.105	.497	-.288
110	1312	.019	.104	.388	-.339
110	1313	.022	.097	.366	-.278
110	1314	.012	.110	.376	-.381
110	1315	.087	.115	.507	-.339
110	1316	.085	.117	.660	-.265
110	1317	.046	.103	.361	-.315
110	1318	.013	.096	.330	-.296
110	1319	.008	.106	.358	-.358
110	1320	.000	.102	.327	-.376
110	1321	-.020	.103	.315	-.462
110	1322	.003	.116	.396	-.488
110	1323	.086	.119	.480	-.276
110	1324	.050	.106	.363	-.348
110	1325	.032	.097	.351	-.236
110	1326	.023	.102	.391	-.324
110	1327	.006	.106	.383	-.353
110	1328	.014	.114	.378	-.403
110	1329	.087	.118	.644	-.322
110	1330	.028	.110	.361	-.345
110	1331	.013	.108	.355	-.338
110	1401	-.018	.092	.268	-.327
110	1402	-.091	.097	.177	-.408
110	1403	-.069	.096	.266	-.433
110	1404	-.052	.095	.241	-.330
110	1405	-.035	.110	.349	-.434
110	1406	-.040	.114	.395	-.499
110	1407	-.025	.102	.292	-.359
110	1408	.018	.097	.351	-.279
110	1409	.017	.107	.328	-.361
110	1410	.039	.091	.341	-.259
110	1411	-.018	.096	.277	-.422
110	1412	-.001	.102	.358	-.310
110	1413	.022	.100	.317	-.303
110	1414	.014	.101	.428	-.346
110	1415	.017	.101	.404	-.285
110	1416	-.030	.098	.275	-.418
110	1417	-.006	.093	.264	-.311
110	1418	.011	.104	.341	-.358
110	1419	.038	.099	.407	-.343
110	1420	.013	.107	.379	-.359
110	1421	.033	.106	.311	-.410
110	1422	-.100	.107	.275	-.540
110	1423	-.037	.100	.276	-.365
110	1424	-.011	.091	.243	-.332
110	1425	.021	.102	.446	-.305
110	1426	.047	.095	.360	-.276
110	1427	-.010	.103	.340	-.437
110	1428	.011	.107	.346	-.379
110	1429	.023	.092	.286	-.282
110	1430	.028	.095	.300	-.355
110	1431	.033	.103	.394	-.295
110	1432	.050	.099	.351	-.249
110	1433	.024	.103	.359	-.320
110	1434	-.002	.107	.371	-.339
110	1435	.030	.100	.333	-.297
110	1901	-.015	.101	.297	-.403
110	1902	.079	.104	.440	-.414
110	1903	.252	.081	.579	-.020
110	1904	-.022	.104	.340	-.416
110	1905	.104	.101	.509	-.181
110	1906	.057	.094	.338	-.237
110	1907	-.003	.107	.395	-.416
110	1908	-.007	.100	.320	-.348
110	1909	.035	.104	.463	-.332
110	1910	.030	.115	.551	-.404
110	1911	.068	.101	.425	-.235
110	1912	.044	.101	.371	-.248
110	1913	-.009	.099	.313	-.393
110	1914	-.055	.100	.326	-.358
110	1915	.046	.092	.420	-.227
110	1916	-.016	.101	.336	-.332
110	1917	-.004	.103	.297	-.411
110	1918	.023	.098	.335	-.339
110	1919	-.020	.121	.412	-.486
110	1920	.138	.132	.576	-.303
110	1921	-.010	.108	.348	-.385
110	1922	.020	.101	.379	-.376
110	1923	.021	.109	.397	-.393
110	1924	-.013	.098	.343	-.342
110	1925	-.096	.129	.425	-.579
110	1926	.112	.111	.574	-.210
110	1927	.013	.089	.291	-.298
110	1928	.035	.099	.407	-.292
110	1929	.022	.109	.460	-.344
110	1930	-.002	.100	.308	-.376
110	1931	.107	.117	.672	-.262
110	1932	.128	.108	.599	-.202
110	1933	.012	.105	.451	-.348
110	1934	.022	.100	.375	-.330
110	1935	.018	.101	.360	-.338
110	1936	.004	.098	.291	-.313
110	1937	-.057	.110	.311	-.502
110	1938	.090	.117	.538	-.311
110	1939	.110	.106	.478	-.209
110	1940	.016	.098	.341	-.311
110	1941	.017	.109	.392	-.386
110	1942	.007	.102	.331	-.344
110	1943	-.015	.106	.392	-.356
110	1944	-.062	.110	.240	-.485
110	1945	.015	.107	.357	-.381
110	1946	.015	.096	.382	-.373
110	1947	.001	.108	.372	-.358
110	1948	-.049	.108	.321	-.464
110	1949	.041	.125	.481	-.375
110	1950	.066	.111	.488	-.315
110	1951	.022	.092	.314	-.315
110	1952	.030	.099	.385	-.289
110	1953	.011	.109	.432	-.344
110	1954	-.004	.096	.308	-.294
110	1955	-.074	.128	.293	-.690
110	1956	.096	.113	.591	-.238
110	1957	-.006	.109	.384	-.424
110	1958	-.008	.099	.374	-.344
110	1959	.007	.112	.377	-.414
110	1960	-.028	.107	.354	-.466
110	1961	.085	.112	.588	-.215
110	1962	.074	.108	.446	-.330

WD	TAP	CPMEAN	CPRMS	CPMAX	CPMIN
110	1963	.021	.085	.371	-.291
110	1964	.014	.101	.379	-.456
110	1965	-.003	.106	.308	-.409
110	1966	.006	.099	.310	-.352
110	1967	.007	.108	.389	-.344
110	1968	-.026	.119	.323	-.459
120	1101	-.039	.101	.276	-.436
120	1102	-.035	.132	.528	-.456
120	1103	-.050	.117	.377	-.515
120	1104	-.029	.114	.289	-.620
120	1105	-.039	.118	.355	-.475
120	1106	-.031	.109	.307	-.505
120	1107	-.023	.109	.321	-.348
120	1108	.031	.119	.482	-.348
120	1109	-.016	.108	.349	-.366
120	1110	.081	.125	.613	-.249
120	1111	.112	.126	.684	-.234
120	1112	-.008	.110	.347	-.442
120	1113	-.019	.101	.298	-.429
120	1114	.047	.110	.364	-.292
120	1115	-.020	.097	.301	-.350
120	1116	-.016	.096	.321	-.326
120	1117	.108	.129	.644	-.249
120	1118	.059	.142	.582	-.370
120	1119	-.047	.125	.400	-.520
120	1120	.008	.105	.362	-.397
120	1121	.069	.128	.710	-.340
120	1122	.035	.119	.498	-.347
120	1123	.003	.110	.404	-.368
120	1124	.014	.111	.375	-.355
120	1125	.055	.103	.377	-.292
120	1126	-.011	.109	.360	-.411
120	1201	.003	.110	.361	-.375
120	1202	-.041	.162	.589	-.597
120	1203	.148	.171	.901	-.263
120	1204	.044	.147	.556	-.495
120	1205	-.026	.163	.530	-.663
120	1206	.079	.157	.788	-.393
120	1207	.020	.130	.508	-.447
120	1208	.076	.121	.473	-.535
120	1209	.055	.120	.502	-.295
120	1210	.076	.113	.578	-.258
120	1211	.031	.128	.730	-.443
120	1212	.067	.129	.590	-.275
120	1213	.063	.116	.567	-.286
120	1214	.017	.123	.475	-.455
120	1215	.083	.117	.554	-.270
120	1216	.059	.116	.517	-.367
120	1217	.087	.129	.630	-.399
120	1218	.106	.130	.683	-.270
120	1219	.099	.124	.741	-.259
120	1220	.081	.127	.551	-.309
120	1221	.075	.116	.477	-.280
120	1222	.100	.115	.520	-.269
120	1223	.058	.138	.498	-.420
120	1224	.017	.105	.380	-.336
120	1225	.074	.106	.472	-.278
120	1226	.073	.130	.461	-.378
120	1227	.103	.119	.618	-.216
120	1228	.045	.116	.509	-.443
120	1229	.041	.109	.559	-.312
120	1301	-.054	.100	.273	-.403
120	1302	-.066	.126	.354	-.514
120	1303	-.078	.132	.282	-.591
120	1304	-.017	.116	.397	-.423
120	1305	.024	.122	.399	-.357
120	1306	.002	.112	.367	-.527
120	1307	-.009	.100	.377	-.355
120	1308	-.035	.111	.261	-.487
120	1309	-.028	.119	.405	-.471
120	1311	.039	.120	.452	-.362
120	1312	.014	.108	.400	-.390
120	1313	.001	.101	.342	-.357
120	1314	-.003	.110	.312	-.376
120	1315	.059	.113	.518	-.285
120	1316	.051	.113	.452	-.297
120	1317	.022	.102	.362	-.323
120	1318	-.007	.111	.409	-.347
120	1319	-.002	.101	.310	-.351
120	1320	-.011	.117	.394	-.556
120	1321	-.027	.110	.372	-.443
120	1322	-.004	.123	.472	-.435
120	1323	.069	.123	.602	-.306
120	1324	.023	.116	.386	-.402
120	1325	.013	.105	.329	-.327
120	1326	.015	.106	.508	-.311
120	1327	-.016	.111	.343	-.359
120	1328	.007	.118	.369	-.437
120	1329	.057	.113	.616	-.274
120	1330	.002	.108	.348	-.349
120	1331	-.010	.105	.323	-.353
120	1401	-.043	.105	.273	-.596
120	1402	-.091	.102	.287	-.404
120	1403	-.071	.101	.287	-.410
120	1404	-.063	.099	.255	-.486
120	1405	-.057	.110	.325	-.445
120	1406	-.069	.110	.265	-.583
120	1407	-.056	.099	.297	-.474
120	1408	-.014	.095	.330	-.337
120	1409	-.035	.107	.289	-.401
120	1410	-.008	.102	.305	-.321
120	1411	-.070	.103	.257	-.473
120	1412	-.037	.113	.391	-.423
120	1413	-.017	.099	.362	-.332
120	1414	-.026	.094	.274	-.377
120	1415	-.023	.115	.306	-.412
120	1416	-.066	.105	.255	-.393
120	1417	-.043	.100	.241	-.487
120	1418	-.014	.107	.328	-.372
120	1419	.008	.102	.406	-.309
120	1420	-.020	.110	.319	-.368
120	1421	-.002	.118	.375	-.452
120	1422	-.107	.118	.311	-.529
120	1423	-.056	.102	.263	-.413
120	1424	-.045	.108	.360	-.414
120	1425	-.019	.101	.313	-.426
120	1426	.007	.094	.310	-.381
120	1427	-.027	.102	.311	-.453
120	1428	-.021	.106	.287	-.377
120	1429	-.007	.103	.323	-.334
120	1430	-.009	.098	.292	-.322
120	1431	.012	.113	.431	-.361
120	1432	.016	.099	.428	-.313
120	1433	-.009	.101	.273	-.356
120	1434	-.055	.128	.347	-.502
120	1435	-.006	.102	.295	-.361
120	1901	-.030	.092	.311	-.338
120	1902	.055	.104	.396	-.383
120	1903	.226	.091	.504	-.113
120	1904	-.037	.119	.396	-.524
120	1905	.075	.099	.386	-.293
120	1906	.020	.104	.369	-.265
120	1907	-.033	.097	.292	-.375
120	1908	-.033	.096	.328	-.348
120	1909	-.001	.105	.356	-.378
120	1910	-.007	.115	.419	-.497
120	1911	.020	.099	.358	-.356
120	1912	.006	.101	.328	-.375
120	1913	-.036	.105	.353	-.550
120	1914	-.085	.111	.227	-.497
120	1915	.011	.118	.368	-.433
120	1916	-.040	.102	.351	-.381
120	1917	-.037	.102	.302	-.395
120	1918	-.014	.100	.360	-.345
120	1919	-.043	.130	.366	-.554
120	1920	.079	.118	.457	-.292
120	1921	-.031	.105	.277	-.476
120	1922	-.004	.103	.288	-.416
120	1923	-.008	.103	.331	-.443
120	1924	-.041	.107	.300	-.416

WD	TAP	CPMEAN	CPRMS	CPMAX	CPMIN
120	1925	-.110	.121	.296	-.621
120	1926	.064	.126	.483	-.342
120	1927	-.020	.096	.266	-.367
120	1928	-.001	.109	.445	-.421
120	1929	-.013	.105	.308	-.385
120	1930	-.038	.107	.333	-.394
120	1931	.053	.112	.507	-.287
120	1932	.090	.109	.542	-.225
120	1933	-.018	.105	.333	-.380
120	1934	-.007	.102	.305	-.517
120	1935	-.011	.102	.326	-.344
120	1936	-.028	.104	.321	-.556
120	1937	-.083	.115	.306	-.728
120	1938	.049	.118	.567	-.415
120	1939	.059	.134	.644	-.404
120	1940	-.011	.101	.395	-.354
120	1941	-.007	.105	.330	-.427
120	1942	-.021	.103	.333	-.382
120	1943	-.031	.109	.360	-.415
120	1944	-.073	.097	.196	-.394
120	1945	-.001	.106	.405	-.390
120	1946	-.002	.103	.350	-.360
120	1947	-.013	.104	.333	-.344
120	1948	-.058	.120	.351	-.494
120	1949	.010	.110	.344	-.366
120	1950	.025	.110	.453	-.291
120	1951	-.018	.099	.258	-.378
120	1952	.000	.112	.366	-.386
120	1953	-.014	.105	.341	-.393
120	1954	-.032	.102	.291	-.383
120	1955	-.087	.117	.241	-.579
120	1956	.058	.107	.521	-.315
120	1957	-.024	.106	.313	-.340
120	1958	-.027	.102	.286	-.403
120	1959	-.018	.101	.289	-.420
120	1960	-.054	.109	.351	-.471
120	1961	.057	.113	.559	-.340
120	1962	.047	.114	.684	-.328
120	1963	.007	.114	.424	-.401
120	1964	-.015	.104	.374	-.468
120	1965	-.023	.103	.306	-.368
120	1966	-.029	.099	.314	-.385
120	1967	-.019	.111	.366	-.568
120	1968	-.048	.102	.293	-.413
130	1101	-.049	.099	.264	-.406
130	1102	-.062	.115	.484	-.550
130	1103	-.071	.103	.337	-.455
130	1104	-.050	.099	.281	-.386
130	1105	-.049	.099	.312	-.414
130	1106	-.059	.111	.486	-.405
130	1107	-.041	.100	.324	-.358
130	1108	-.021	.104	.358	-.336
130	1109	-.032	.103	.304	-.409
130	1110	.007	.124	.522	-.398
130	1111	.019	.117	.528	-.345
130	1112	-.040	.105	.275	-.377
130	1113	-.035	.095	.283	-.402
130	1114	-.016	.103	.402	-.447
130	1115	-.033	.099	.293	-.391
130	1116	-.027	.097	.334	-.367
130	1117	.005	.111	.666	-.367
130	1118	-.024	.119	.502	-.380
130	1119	-.052	.102	.353	-.426
130	1120	-.036	.104	.337	-.391
130	1121	-.003	.109	.448	-.356
130	1122	-.021	.104	.332	-.406
130	1123	-.035	.100	.374	-.412
130	1124	-.021	.100	.334	-.364
130	1125	.008	.099	.438	-.382
130	1126	-.019	.093	.275	-.308
130	1201	-.023	.105	.361	-.374
130	1202	.001	.126	.553	-.459
130	1203	.047	.135	.808	-.347
130	1204	-.023	.119	.494	-.408
130	1205	.008	.122	.436	-.540
130	1206	.031	.129	.711	-.340
130	1207	-.065	.107	.392	-.498
130	1208	.006	.122	.455	-.446
130	1209	.026	.124	.608	-.338
130	1210	.014	.125	.548	-.344
130	1211	-.020	.116	.500	-.395
130	1212	-.026	.107	.344	-.348
130	1213	.005	.114	.470	-.393
130	1214	.016	.114	.360	-.384
130	1215	.037	.117	.604	-.393
130	1216	.028	.104	.344	-.380
130	1217	.006	.117	.475	-.413
130	1218	.005	.104	.450	-.325
130	1219	.018	.118	.530	-.316
130	1220	.016	.106	.510	-.326
130	1221	.034	.116	.559	-.318
130	1222	.018	.119	.352	-.308
130	1223	-.026	.114	.479	-.431
130	1224	.022	.116	.412	-.421
130	1225	.033	.108	.489	-.315
130	1226	.014	.106	.452	-.336
130	1227	.023	.105	.432	-.363
130	1228	-.016	.123	.482	-.403
130	1229	-.001	.114	.349	-.390
130	1301	-.043	.105	.293	-.377
130	1302	-.030	.112	.315	-.427
130	1303	-.059	.116	.295	-.479
130	1304	-.011	.103	.361	-.377
130	1305	.013	.111	.427	-.392
130	1306	.013	.111	.412	-.414
130	1307	-.018	.105	.427	-.403
130	1308	-.024	.114	.486	-.614
130	1309	-.010	.117	.316	-.529
130	1311	.032	.111	.396	-.372
130	1312	.019	.105	.503	-.358
130	1313	-.013	.099	.361	-.368
130	1314	.014	.100	.337	-.379
130	1315	.036	.114	.526	-.358
130	1316	.026	.108	.428	-.312
130	1317	.012	.104	.380	-.304
130	1318	-.006	.104	.392	-.367
130	1319	-.003	.097	.403	-.351
130	1320	.001	.103	.361	-.435
130	1321	-.000	.110	.326	-.647
130	1322	.007	.109	.397	-.413
130	1323	.029	.109	.411	-.329
130	1324	.003	.104	.414	-.324
130	1325	.001	.103	.393	-.354
130	1326	.014	.106	.427	-.359
130	1327	.006	.102	.420	-.343
130	1328	.015	.115	.323	-.340
130	1329	.020	.103	.452	-.375
130	1330	-.024	.112	.385	-.421
130	1331	-.036	.111	.362	-.440
130	1401	-.043	.104	.312	-.450
130	1402	-.104	.101	.217	-.517
130	1403	-.072	.107	.239	-.554
130	1404	-.063	.103	.290	-.481
130	1405	-.058	.112	.310	-.537
130	1406	-.053	.118	.310	-.552
130	1407	-.042	.101	.360	-.378
130	1408	-.048	.101	.303	-.390
130	1409	-.039	.094	.345	-.420
130	1410	-.034	.105	.260	-.358
130	1411	-.062	.113	.317	-.486
130	1412	-.056	.100	.288	-.426
130	1413	-.038	.110	.315	-.468
130	1414	-.044	.096	.247	-.464
130	1415	-.036	.102	.323	-.381
130	1416	-.070	.100	.235	-.473
130	1417	-.058	.109	.325	-.426
130	1418	-.038	.109	.360	-.433
130	1419	-.017	.098	.282	-.327
130	1420	-.041	.114	.363	-.446
130	1421	-.019	.115	.328	-.454

WD	TAP	CPMEAN	CPRMS	CPMAX	CPMIN
130	1422	-.080	.117	.336	-.645
130	1423	-.059	.107	.349	-.477
130	1424	-.051	.104	.313	-.488
130	1425	-.036	.114	.303	-.480
130	1426	-.017	.100	.314	-.395
130	1427	-.042	.105	.349	-.370
130	1428	-.032	.094	.364	-.366
130	1429	-.029	.109	.329	-.363
130	1430	-.029	.108	.328	-.391
130	1431	-.029	.102	.301	-.418
130	1432	-.017	.109	.321	-.461
130	1433	-.029	.103	.318	-.338
130	1434	-.043	.109	.309	-.391
130	1435	-.026	.103	.309	-.393
130	1901	-.035	.112	.300	-.440
130	1902	.077	.105	.531	-.378
130	1903	.202	.090	.456	-.149
130	1904	-.014	.099	.284	-.409
130	1905	.053	.095	.370	-.276
130	1906	-.066	.092	.320	-.375
130	1907	-.038	.096	.232	-.406
130	1908	-.051	.101	.344	-.365
130	1909	-.032	.097	.430	-.318
130	1910	-.033	.101	.325	-.398
130	1911	-.011	.095	.323	-.338
130	1912	-.026	.101	.313	-.409
130	1913	-.043	.101	.292	-.485
130	1914	-.060	.100	.239	-.383
130	1915	-.024	.094	.305	-.419
130	1916	-.048	.101	.239	-.490
130	1917	-.048	.095	.286	-.349
130	1918	-.039	.102	.312	-.398
130	1919	-.052	.122	.393	-.640
130	1920	-.003	.110	.542	-.349
130	1921	-.042	.097	.257	-.406
130	1922	-.032	.105	.278	-.429
130	1923	-.037	.110	.318	-.401
130	1924	-.045	.105	.249	-.539
130	1925	-.101	.102	.270	-.549
130	1926	-.005	.123	.771	-.362
130	1927	-.045	.101	.275	-.446
130	1928	-.038	.100	.275	-.411
130	1929	-.039	.099	.293	-.398
130	1930	-.051	.097	.311	-.362
130	1931	-.004	.108	.481	-.333
130	1932	.011	.100	.352	-.252
130	1933	-.043	.099	.365	-.391
130	1934	-.040	.102	.306	-.473
130	1935	-.040	.101	.309	-.418
130	1936	-.054	.106	.314	-.509
130	1937	-.079	.111	.293	-.681
130	1938	.005	.113	.411	-.369
130	1939	.008	.109	.574	-.424
130	1940	-.032	.104	.391	-.369
130	1941	-.029	.098	.303	-.391
130	1942	-.030	.103	.296	-.391
130	1943	-.037	.104	.316	-.400
130	1944	-.064	.098	.203	-.360
130	1945	-.029	.099	.276	-.367
130	1946	-.015	.107	.321	-.383
130	1947	-.024	.109	.324	-.401
130	1948	-.035	.109	.290	-.459
130	1949	-.027	.102	.590	-.377
130	1950	.004	.121	.671	-.362
130	1951	-.050	.104	.282	-.605
130	1952	-.028	.102	.304	-.457
130	1953	-.024	.099	.332	-.383
130	1954	-.027	.096	.306	-.341
130	1955	-.053	.108	.262	-.466
130	1956	.029	.103	.363	-.302
130	1957	-.036	.098	.339	-.331
130	1958	-.030	.098	.327	-.408
130	1959	-.027	.100	.316	-.403
130	1960	-.038	.111	.324	-.566
130	1961	.030	.099	.378	-.287
130	1962	.031	.109	.474	-.352
130	1963	.009	.097	.317	-.341
130	1964	-.031	.106	.259	-.455
130	1965	-.031	.095	.282	-.383
130	1966	-.031	.101	.288	-.393
130	1967	-.025	.109	.321	-.460
130	1968	-.047	.110	.340	-.455
140	1101	-.053	.099	.345	-.452
140	1102	-.085	.119	.299	-.518
140	1103	-.081	.097	.225	-.441
140	1104	-.051	.101	.254	-.435
140	1105	-.046	.096	.269	-.337
140	1106	-.077	.115	.288	-.455
140	1107	-.039	.096	.326	-.342
140	1108	-.042	.098	.262	-.430
140	1109	-.039	.100	.281	-.361
140	1110	-.037	.099	.336	-.446
140	1111	-.033	.106	.334	-.432
140	1112	-.049	.103	.245	-.404
140	1113	-.038	.095	.259	-.329
140	1114	-.028	.100	.326	-.393
140	1115	-.032	.108	.333	-.404
140	1116	-.035	.106	.338	-.332
140	1117	-.030	.112	.368	-.446
140	1118	-.070	.116	.314	-.460
140	1119	-.048	.108	.357	-.398
140	1120	-.047	.104	.341	-.371
140	1121	-.057	.112	.312	-.459
140	1122	-.059	.107	.269	-.397
140	1123	-.054	.093	.251	-.386
140	1124	-.040	.101	.267	-.441
140	1125	-.027	.100	.296	-.317
140	1126	-.022	.093	.332	-.292
140	1201	-.031	.099	.302	-.430
140	1202	.032	.120	.449	-.385
140	1203	.033	.113	.453	-.345
140	1204	-.065	.112	.344	-.393
140	1205	.033	.121	.473	-.421
140	1206	.027	.115	.428	-.478
140	1207	-.074	.114	.276	-.585
140	1208	-.011	.102	.396	-.339
140	1209	.010	.098	.326	-.333
140	1210	-.027	.097	.441	-.335
140	1211	-.058	.104	.245	-.364
140	1212	-.060	.093	.385	-.331
140	1213	-.031	.104	.340	-.455
140	1214	.014	.126	.456	-.428
140	1215	.005	.102	.378	-.312
140	1216	.024	.100	.420	-.274
140	1217	-.029	.104	.294	-.340
140	1218	-.025	.098	.311	-.400
140	1219	-.014	.101	.318	-.310
140	1220	-.012	.110	.570	-.383
140	1221	.010	.100	.376	-.274
140	1222	-.023	.106	.389	-.351
140	1223	-.033	.095	.282	-.328
140	1224	.035	.105	.472	-.271
140	1225	.001	.103	.351	-.332
140	1226	-.007	.096	.351	-.362
140	1227	-.022	.093	.316	-.312
140	1228	-.044	.096	.363	-.417
140	1229	-.021	.096	.329	-.310
140	1301	-.031	.093	.267	-.335
140	1302	-.006	.122	.417	-.418
140	1303	-.046	.126	.380	-.489
140	1304	.005	.103	.446	-.325
140	1305	.012	.103	.359	-.297
140	1306	.018	.105	.370	-.328
140	1307	-.024	.097	.285	-.360
140	1308	-.010	.118	.382	-.413
140	1309	.022	.114	.442	-.386
140	1311	.036	.106	.401	-.331
140	1312	.026	.113	.421	-.391
140	1313	-.013	.110	.364	-.323
140	1314	.033	.115	.432	-.393

WD	TAP	CPMEAN	CPRMS	CPMAX	CPMIN
140	1315	.050	.102	.498	-.239
140	1316	.007	.111	.413	-.381
140	1317	.015	.107	.463	-.339
140	1318	-.012	.106	.289	-.349
140	1319	.005	.103	.360	-.298
140	1320	.011	.106	.346	-.357
140	1321	.029	.110	.386	-.338
140	1322	.047	.100	.431	-.262
140	1323	.016	.105	.452	-.327
140	1324	-.001	.098	.315	-.304
140	1325	-.009	.099	.283	-.327
140	1326	.023	.101	.386	-.335
140	1327	.034	.110	.562	-.341
140	1328	.042	.116	.566	-.328
140	1329	.010	.106	.365	-.295
140	1330	-.035	.114	.321	-.410
140	1331	-.041	.113	.310	-.418
140	1401	-.051	.096	.241	-.376
140	1402	-.098	.092	.181	-.404
140	1403	-.072	.100	.243	-.525
140	1404	-.058	.093	.331	-.475
140	1405	-.059	.097	.238	-.359
140	1406	-.047	.102	.275	-.390
140	1407	-.046	.095	.220	-.439
140	1408	-.043	.099	.264	-.327
140	1409	-.036	.098	.270	-.401
140	1410	-.039	.089	.245	-.337
140	1411	-.057	.101	.297	-.426
140	1412	-.036	.097	.243	-.417
140	1413	-.051	.097	.273	-.344
140	1414	-.054	.100	.253	-.370
140	1415	-.031	.089	.278	-.324
140	1416	-.049	.089	.243	-.343
140	1417	-.048	.091	.287	-.428
140	1418	-.053	.112	.277	-.445
140	1419	-.037	.106	.289	-.388
140	1420	-.057	.116	.288	-.449
140	1421	-.052	.116	.333	-.447
140	1422	-.062	.099	.307	-.499
140	1423	-.043	.089	.320	-.349
140	1424	-.044	.098	.380	-.343
140	1425	-.034	.102	.284	-.387
140	1426	-.033	.094	.233	-.373
140	1427	-.030	.102	.321	-.357
140	1428	-.025	.101	.295	-.351
140	1429	-.031	.091	.273	-.324
140	1430	-.039	.099	.298	-.362
140	1431	-.023	.097	.282	-.415
140	1432	-.040	.096	.282	-.332
140	1433	-.042	.102	.286	-.359
140	1434	-.041	.096	.285	-.354
140	1435	-.044	.094	.257	-.333
140	1901	-.038	.088	.341	-.317
140	1902	.091	.088	.368	-.208
140	1903	.197	.084	.442	-.056
140	1904	.002	.094	.442	-.340
140	1905	.043	.091	.383	-.234
140	1906	-.023	.095	.392	-.284
140	1907	-.039	.099	.281	-.381
140	1908	-.049	.094	.231	-.439
140	1909	-.035	.097	.407	-.412
140	1910	-.037	.103	.273	-.386
140	1911	-.034	.100	.349	-.366
140	1912	-.038	.089	.290	-.311
140	1913	-.040	.095	.276	-.347
140	1914	-.035	.090	.213	-.329
140	1915	-.036	.093	.245	-.345
140	1916	-.043	.088	.213	-.339
140	1917	-.056	.093	.231	-.376
140	1918	-.047	.097	.266	-.366
140	1919	-.052	.105	.310	-.383
140	1920	-.026	.101	.305	-.353
140	1921	-.046	.099	.292	-.415
140	1922	-.045	.099	.313	-.459
140	1923	-.043	.094	.243	-.363
140	1924	-.048	.094	.242	-.463
140	1925	-.099	.101	.261	-.525
140	1926	-.050	.098	.233	-.388
140	1927	-.052	.092	.214	-.334
140	1928	-.046	.099	.415	-.432
140	1929	-.047	.095	.281	-.326
140	1930	-.059	.099	.380	-.328
140	1931	-.043	.104	.273	-.377
140	1932	-.023	.093	.335	-.383
140	1933	-.040	.101	.291	-.496
140	1934	-.046	.104	.318	-.411
140	1935	-.049	.103	.354	-.388
140	1936	-.057	.091	.286	-.336
140	1937	-.066	.098	.276	-.427
140	1938	-.022	.105	.282	-.383
140	1939	-.030	.100	.278	-.398
140	1940	-.027	.089	.271	-.336
140	1941	-.036	.094	.248	-.390
140	1942	-.030	.095	.291	-.359
140	1943	-.033	.097	.318	-.352
140	1944	-.041	.082	.206	-.313
140	1945	-.039	.101	.346	-.430
140	1946	-.020	.100	.341	-.380
140	1947	-.020	.096	.291	-.355
140	1948	-.025	.097	.253	-.364
140	1949	-.054	.105	.338	-.477
140	1950	-.024	.096	.304	-.347
140	1951	-.060	.094	.242	-.347
140	1952	-.042	.101	.498	-.418
140	1953	-.026	.095	.353	-.311
140	1954	-.032	.096	.387	-.309
140	1955	-.037	.102	.285	-.384
140	1956	.031	.107	.439	-.334
140	1957	-.036	.100	.312	-.448
140	1958	-.034	.102	.285	-.369
140	1959	-.026	.102	.355	-.350
140	1960	-.043	.091	.291	-.334
140	1961	.019	.102	.540	-.295
140	1962	.029	.101	.353	-.334
140	1963	.012	.092	.307	-.313
140	1964	-.030	.094	.265	-.353
140	1965	-.038	.093	.234	-.348
140	1966	-.035	.097	.278	-.365
140	1967	-.031	.105	.289	-.376
140	1968	-.039	.097	.272	-.412
150	1101	-.073	.096	.232	-.489
150	1102	-.093	.114	.292	-.482
150	1103	-.119	.121	.271	-.608
150	1104	-.053	.103	.266	-.430
150	1105	-.044	.098	.282	-.390
150	1106	-.073	.104	.315	-.401
150	1107	-.034	.095	.268	-.363
150	1108	-.037	.094	.301	-.340
150	1109	-.039	.098	.265	-.396
150	1110	-.039	.107	.415	-.486
150	1111	-.039	.098	.309	-.356
150	1112	-.049	.096	.245	-.368
150	1113	-.041	.100	.375	-.364
150	1114	-.035	.095	.248	-.344
150	1115	-.032	.096	.343	-.374
150	1116	-.030	.091	.261	-.316
150	1117	-.046	.102	.271	-.380
150	1118	-.070	.104	.339	-.411
150	1119	-.045	.097	.269	-.443
150	1120	-.045	.099	.327	-.377
150	1121	-.059	.102	.277	-.424
150	1122	-.057	.098	.257	-.404
150	1123	-.051	.097	.328	-.446
150	1124	-.045	.105	.278	-.428
150	1125	-.030	.105	.325	-.397
150	1126	-.020	.098	.355	-.326
150	1201	-.028	.100	.314	-.350
150	1202	.078	.155	.666	-.324
150	1203	.061	.139	.595	-.330
150	1204	-.080	.101	.222	-.518

WD	TAP	CPMEAN	CPRMS	CPMAX	CPMIN
150	1205	.075	.152	.746	-.325
150	1206	.057	.142	.684	-.333
150	1207	-.118	.115	.201	-.643
150	1208	-.002	.098	.413	-.319
150	1209	.025	.100	.325	-.332
150	1210	-.033	.100	.405	-.389
150	1211	-.052	.106	.308	-.524
150	1212	-.050	.106	.350	-.409
150	1213	-.020	.103	.366	-.375
150	1214	.065	.135	.640	-.422
150	1215	.025	.113	.547	-.313
150	1216	.055	.108	.534	-.333
150	1217	-.044	.101	.235	-.450
150	1218	-.028	.096	.379	-.349
150	1219	-.020	.092	.327	-.281
150	1220	-.018	.103	.305	-.373
150	1221	.032	.117	.387	-.354
150	1222	-.012	.091	.331	-.342
150	1223	-.052	.102	.305	-.389
150	1224	.060	.105	.422	-.294
150	1225	.034	.116	.462	-.357
150	1226	-.016	.102	.342	-.450
150	1227	-.014	.090	.261	-.329
150	1228	-.043	.094	.269	-.331
150	1229	-.035	.091	.243	-.391
150	1301	-.033	.105	.297	-.399
150	1302	.046	.130	.519	-.444
150	1303	-.009	.133	.575	-.498
150	1304	.020	.104	.433	-.303
150	1305	.042	.108	.468	-.270
150	1306	.051	.109	.438	-.331
150	1307	-.007	.101	.378	-.434
150	1308	.007	.106	.384	-.309
150	1309	.039	.107	.426	-.312
150	1311	.071	.118	.620	-.321
150	1312	.055	.118	.648	-.328
150	1313	.013	.104	.412	-.312
150	1314	.061	.111	.623	-.302
150	1315	.064	.117	.617	-.266
150	1316	.029	.109	.536	-.392
150	1317	.042	.111	.426	-.344
150	1318	.018	.104	.341	-.399
150	1319	.035	.098	.423	-.336
150	1320	.041	.114	.439	-.352
150	1321	.070	.127	.554	-.314
150	1322	.075	.127	.705	-.296
150	1323	.038	.109	.411	-.317
150	1324	.019	.100	.463	-.269
150	1325	.008	.098	.349	-.375
150	1326	.053	.105	.437	-.327
150	1327	.056	.115	.485	-.309
150	1328	.060	.112	.574	-.280
150	1329	.026	.111	.408	-.322
150	1330	-.026	.119	.355	-.423
150	1331	-.035	.119	.412	-.396
150	1401	-.061	.102	.242	-.431
150	1402	-.106	.102	.239	-.517
150	1403	-.080	.099	.348	-.441
150	1404	-.071	.099	.249	-.576
150	1405	-.065	.104	.249	-.415
150	1406	-.063	.097	.249	-.381
150	1407	-.059	.092	.344	-.355
150	1408	-.059	.094	.249	-.361
150	1409	-.059	.092	.213	-.411
150	1410	-.045	.098	.244	-.403
150	1411	-.058	.092	.315	-.347
150	1412	-.056	.102	.336	-.384
150	1413	-.060	.096	.294	-.369
150	1414	-.042	.106	.343	-.407
150	1415	-.040	.092	.237	-.342
150	1416	-.045	.090	.291	-.382
150	1417	-.045	.088	.237	-.305
150	1418	-.057	.119	.346	-.472
150	1419	-.043	.098	.276	-.431
150	1420	-.067	.122	.345	-.509
150	1421	-.053	.110	.272	-.414
150	1422	-.055	.100	.333	-.406
150	1423	-.048	.097	.301	-.315
150	1424	-.052	.096	.289	-.414
150	1425	-.044	.096	.286	-.430
150	1426	-.043	.089	.377	-.334
150	1427	-.034	.093	.275	-.336
150	1428	-.032	.096	.283	-.401
150	1429	-.034	.102	.276	-.384
150	1430	-.033	.089	.353	-.332
150	1431	-.041	.103	.343	-.388
150	1432	-.039	.093	.263	-.332
150	1433	-.049	.099	.304	-.367
150	1434	-.064	.101	.255	-.456
150	1435	-.042	.094	.276	-.424
150	1901	-.044	.093	.269	-.320
150	1902	.096	.087	.380	-.224
150	1903	.196	.089	.500	-.112
150	1904	.008	.099	.339	-.281
150	1905	.045	.091	.320	-.328
150	1906	-.027	.094	.326	-.334
150	1907	-.039	.095	.287	-.403
150	1908	-.048	.102	.295	-.359
150	1909	-.030	.096	.284	-.338
150	1910	-.028	.099	.310	-.380
150	1911	-.031	.095	.252	-.409
150	1912	-.032	.100	.362	-.403
150	1913	-.036	.094	.286	-.315
150	1914	-.040	.085	.221	-.305
150	1915	-.036	.096	.312	-.437
150	1916	-.043	.096	.269	-.442
150	1917	-.049	.103	.242	-.424
150	1918	-.049	.105	.294	-.450
150	1919	-.056	.111	.287	-.446
150	1920	-.029	.100	.263	-.362
150	1921	-.046	.092	.307	-.355
150	1922	-.045	.097	.279	-.362
150	1923	-.049	.104	.266	-.455
150	1924	-.053	.102	.260	-.378
150	1925	-.104	.103	.250	-.469
150	1926	-.058	.098	.260	-.374
150	1927	-.053	.096	.275	-.374
150	1928	-.045	.104	.316	-.336
150	1929	-.049	.094	.257	-.405
150	1930	-.064	.099	.282	-.379
150	1931	-.041	.100	.301	-.395
150	1932	-.038	.101	.357	-.322
150	1933	-.042	.101	.306	-.346
150	1934	-.043	.104	.326	-.436
150	1935	-.047	.098	.229	-.433
150	1936	-.062	.105	.291	-.468
150	1937	-.077	.100	.282	-.471
150	1938	-.029	.099	.255	-.400
150	1939	-.028	.110	.511	-.464
150	1940	-.035	.101	.300	-.458
150	1941	-.033	.106	.268	-.474
150	1942	-.024	.103	.324	-.338
150	1943	-.030	.101	.300	-.374
150	1944	-.046	.087	.259	-.312
150	1945	-.036	.095	.300	-.368
150	1946	-.008	.102	.327	-.325
150	1947	-.018	.107	.319	-.415
150	1948	-.021	.105	.354	-.402
150	1949	-.040	.109	.328	-.375
150	1950	-.014	.103	.410	-.354
150	1951	-.073	.096	.240	-.393
150	1952	-.037	.110	.400	-.494
150	1953	-.017	.103	.378	-.383
150	1954	-.024	.099	.345	-.341
150	1955	-.035	.107	.319	-.398
150	1956	.051	.111	.422	-.316
150	1957	-.029	.103	.335	-.367
150	1958	-.022	.100	.358	-.362
150	1959	-.014	.096	.312	-.411
150	1960	-.028	.107	.394	-.511

WD	TAP	CPMEAN	CPRMS	CPMAX	CPMIN	WD	TAP	CPMEAN	CPRMS	CPMAX	CPMIN	WD	TAP	CPMEAN	CPRMS	CPMAX	CPMIN
150	1961	.045	.110	.396	-.336	160	1217	-.009	.106	.405	-.333	160	1408	-.034	.100	.293	-.540
150	1962	.063	.105	.454	-.260	160	1218	.010	.096	.350	-.418	160	1409	-.044	.092	.252	-.386
150	1963	.041	.103	.410	-.290	160	1219	.013	.100	.351	-.310	160	1410	-.033	.085	.219	-.384
150	1964	-.033	.105	.273	-.503	160	1220	.038	.115	.443	-.338	160	1411	-.064	.111	.283	-.517
150	1965	-.031	.103	.260	-.455	160	1221	.079	.123	.871	-.262	160	1412	-.042	.107	.291	-.437
150	1966	-.028	.103	.301	-.341	160	1222	.023	.108	.474	-.424	160	1413	-.050	.096	.236	-.390
150	1967	-.024	.114	.394	-.501	160	1223	-.042	.103	.277	-.338	160	1414	-.042	.091	.270	-.344
150	1968	-.043	.102	.319	-.362	160	1224	.061	.120	.799	-.331	160	1415	-.034	.092	.301	-.394
160	1101	-.063	.109	.311	-.491	160	1225	.079	.120	.667	-.296	160	1416	-.051	.104	.259	-.581
160	1102	-.111	.119	.384	-.496	160	1226	.034	.109	.411	-.363	160	1417	-.037	.094	.246	-.366
160	1103	-.135	.128	.305	-.649	160	1227	.017	.096	.385	-.328	160	1418	-.037	.116	.311	-.417
160	1104	-.060	.107	.267	-.401	160	1228	-.034	.101	.287	-.373	160	1419	-.018	.101	.290	-.389
160	1105	-.049	.097	.246	-.428	160	1229	-.011	.093	.274	-.416	160	1420	-.049	.118	.266	-.425
160	1106	-.075	.115	.416	-.507	160	1301	-.033	.118	.392	-.487	160	1421	-.039	.117	.329	-.459
160	1107	-.040	.104	.299	-.409	160	1302	.027	.143	.511	-.511	160	1422	-.053	.107	.296	-.606
160	1108	-.039	.090	.230	-.393	160	1303	-.023	.138	.465	-.549	160	1423	-.038	.099	.315	-.351
160	1109	-.031	.101	.281	-.380	160	1304	.015	.120	.482	-.481	160	1424	-.042	.097	.241	-.433
160	1110	-.014	.101	.425	-.356	160	1305	.069	.117	.529	-.318	160	1425	-.033	.104	.333	-.365
160	1111	-.008	.107	.319	-.385	160	1306	.044	.118	.632	-.331	160	1426	-.024	.094	.277	-.343
160	1112	-.054	.103	.251	-.478	160	1307	-.004	.099	.432	-.350	160	1427	-.018	.101	.301	-.430
160	1113	-.030	.087	.273	-.358	160	1308	.006	.125	.492	-.461	160	1428	-.017	.093	.273	-.443
160	1114	-.034	.099	.319	-.363	160	1309	.019	.142	.595	-.519	160	1429	-.019	.091	.299	-.336
160	1115	-.027	.089	.299	-.356	160	1311	.088	.129	.664	-.317	160	1430	-.030	.101	.301	-.433
160	1116	-.024	.096	.259	-.304	160	1312	.055	.121	.619	-.326	160	1431	-.025	.105	.275	-.357
160	1117	-.006	.115	.385	-.412	160	1313	.016	.107	.415	-.375	160	1432	-.028	.092	.270	-.390
160	1118	-.067	.116	.435	-.537	160	1314	.054	.122	.535	-.378	160	1433	-.031	.103	.312	-.424
160	1119	-.051	.103	.284	-.459	160	1315	.096	.142	.749	-.289	160	1434	-.047	.100	.349	-.462
160	1120	-.051	.103	.300	-.425	160	1316	.074	.132	.783	-.299	160	1435	-.037	.100	.307	-.377
160	1121	-.020	.101	.378	-.352	160	1317	.040	.111	.440	-.317	160	1901	-.025	.100	.379	-.375
160	1122	-.049	.098	.275	-.408	160	1318	.025	.109	.383	-.304	160	1902	.096	.091	.372	-.270
160	1123	-.057	.112	.350	-.447	160	1319	.028	.122	.498	-.384	160	1903	.204	.083	.462	-.056
160	1124	-.043	.107	.286	-.405	160	1320	.030	.114	.437	-.378	160	1904	.014	.100	.418	-.381
160	1125	-.019	.099	.325	-.341	160	1321	.024	.127	.455	-.421	160	1905	.054	.102	.476	-.304
160	1126	-.007	.111	.313	-.378	160	1322	.078	.145	.597	-.421	160	1906	-.013	.098	.409	-.345
160	1201	-.006	.109	.479	-.330	160	1323	.075	.136	.538	-.306	160	1907	-.044	.094	.247	-.442
160	1202	.118	.175	.847	-.484	160	1324	.023	.101	.370	-.323	160	1908	-.058	.098	.255	-.440
160	1203	.126	.151	.757	-.276	160	1325	.007	.101	.469	-.370	160	1909	-.031	.096	.269	-.350
160	1204	-.091	.117	.277	-.583	160	1326	.050	.110	.672	-.330	160	1910	-.031	.103	.317	-.453
160	1205	.106	.171	.868	-.427	160	1327	.049	.117	.448	-.427	160	1911	-.027	.093	.277	-.345
160	1206	.114	.154	.697	-.284	160	1328	.055	.130	.640	-.483	160	1912	-.037	.098	.298	-.398
160	1207	-.125	.132	.271	-.655	160	1329	.062	.114	.503	-.320	160	1913	-.031	.095	.282	-.307
160	1208	.034	.113	.420	-.333	160	1330	-.017	.120	.548	-.416	160	1914	-.042	.094	.237	-.369
160	1209	.061	.113	.480	-.262	160	1331	-.014	.122	.557	-.453	160	1915	-.029	.099	.276	-.337
160	1210	.002	.114	.480	-.382	160	1401	-.060	.104	.276	-.435	160	1916	-.044	.089	.205	-.406
160	1211	.035	.122	.616	-.328	160	1402	-.087	.115	.233	-.576	160	1917	-.059	.103	.285	-.459
160	1212	.020	.125	.487	-.365	160	1403	-.069	.101	.254	-.475	160	1918	-.037	.100	.337	-.483
160	1213	.011	.102	.385	-.329	160	1404	-.064	.099	.270	-.517	160	1919	-.061	.111	.284	-.543
160	1214	.051	.147	.596	-.364	160	1405	-.075	.105	.250	-.439	160	1920	.008	.101	.436	-.357
160	1215	.077	.136	.736	-.328	160	1406	-.064	.107	.278	-.467	160	1921	-.038	.109	.324	-.434
160	1216	.081	.121	.640	-.268	160	1407	-.052	.098	.252	-.503	160	1922	-.043	.099	.284	-.341

WD	TAP	CPMEAN	CPRMS	CPMAX	CPMIN	WD	TAP	CPMEAN	CPRMS	CPMAX	CPMIN	WD	TAP	CPMEAN	CPRMS	CPMAX	CPMIN
160	1923	-.051	.104	.295	-.430	170	1105	-.061	.112	.324	-.479	170	1229	-.019	.091	.251	-.328
160	1924	-.053	.101	.249	-.400	170	1106	-.084	.109	.281	-.445	170	1301	-.044	.098	.414	-.461
160	1925	-.118	.109	.216	-.535	170	1107	-.050	.099	.288	-.384	170	1302	-.042	.117	.372	-.472
160	1926	-.028	.108	.357	-.438	170	1108	-.042	.103	.280	-.376	170	1303	-.068	.118	.304	-.443
160	1927	-.051	.094	.242	-.491	170	1109	-.045	.102	.341	-.441	170	1304	-.029	.106	.451	-.355
160	1928	-.045	.104	.371	-.506	170	1110	-.014	.105	.360	-.402	170	1305	.003	.114	.418	-.358
160	1929	-.054	.109	.261	-.436	170	1111	-.006	.107	.437	-.390	170	1306	-.003	.106	.428	-.329
160	1930	-.081	.106	.239	-.645	170	1112	-.064	.097	.220	-.377	170	1307	-.030	.105	.290	-.424
160	1931	-.015	.105	.320	-.412	170	1113	-.044	.103	.334	-.474	170	1308	-.048	.110	.349	-.444
160	1932	-.004	.093	.308	-.391	170	1114	-.034	.095	.278	-.358	170	1309	-.030	.113	.433	-.479
160	1933	-.041	.101	.273	-.412	170	1115	-.036	.098	.272	-.398	170	1311	.018	.103	.468	-.347
160	1934	-.054	.107	.299	-.418	170	1116	-.031	.095	.309	-.465	170	1312	-.009	.102	.334	-.354
160	1935	-.062	.106	.248	-.509	170	1117	-.002	.102	.434	-.327	170	1313	-.020	.097	.346	-.319
160	1936	-.087	.111	.315	-.554	170	1118	-.068	.112	.308	-.490	170	1314	-.003	.104	.351	-.373
160	1937	-.091	.111	.235	-.493	170	1119	-.078	.118	.272	-.483	170	1315	.017	.122	.510	-.370
160	1938	.004	.112	.328	-.371	170	1120	-.055	.101	.305	-.470	170	1316	.019	.127	.542	-.442
160	1939	.021	.117	.739	-.420	170	1121	-.023	.103	.342	-.413	170	1317	-.009	.109	.497	-.424
160	1940	-.019	.093	.282	-.325	170	1122	-.062	.103	.262	-.518	170	1318	-.030	.099	.299	-.368
160	1941	-.021	.099	.308	-.384	170	1123	-.063	.110	.336	-.475	170	1319	-.020	.104	.328	-.479
160	1942	-.019	.099	.294	-.460	170	1124	-.045	.103	.348	-.354	170	1320	-.015	.102	.350	-.317
160	1943	-.030	.097	.265	-.360	170	1125	-.019	.108	.389	-.424	170	1321	-.026	.112	.381	-.415
160	1944	-.070	.088	.210	-.452	170	1126	-.029	.107	.328	-.436	170	1322	-.003	.118	.402	-.466
160	1945	-.014	.112	.339	-.414	170	1201	-.033	.102	.453	-.348	170	1323	.029	.125	.675	-.427
160	1946	.004	.105	.438	-.292	170	1202	-.009	.132	.522	-.417	170	1324	-.014	.104	.350	-.351
160	1947	-.006	.107	.363	-.391	170	1203	.014	.123	.462	-.366	170	1325	-.022	.096	.356	-.348
160	1948	-.017	.106	.389	-.360	170	1204	-.056	.103	.264	-.404	170	1326	-.007	.105	.320	-.373
160	1949	.007	.116	.463	-.346	170	1205	-.014	.126	.529	-.441	170	1327	-.013	.113	.322	-.476
160	1950	.030	.118	.592	-.327	170	1206	-.004	.123	.432	-.377	170	1328	-.002	.107	.478	-.328
160	1951	-.057	.095	.261	-.577	170	1207	-.068	.106	.228	-.648	170	1329	.022	.123	.622	-.346
160	1952	-.003	.109	.410	-.482	170	1208	.004	.119	.568	-.324	170	1330	-.041	.110	.343	-.457
160	1953	-.006	.112	.435	-.482	170	1209	.015	.105	.389	-.475	170	1331	-.056	.110	.335	-.454
160	1954	-.023	.099	.403	-.407	170	1210	.004	.113	.407	-.360	170	1401	-.048	.104	.335	-.402
160	1955	-.047	.120	.368	-.509	170	1211	-.029	.122	.631	-.505	170	1402	-.107	.101	.227	-.525
160	1956	.083	.122	.613	-.380	170	1212	-.032	.106	.491	-.442	170	1403	-.082	.098	.187	-.442
160	1957	-.027	.101	.276	-.367	170	1213	-.026	.105	.267	-.421	170	1404	-.061	.097	.258	-.416
160	1958	-.022	.106	.355	-.420	170	1214	-.017	.121	.408	-.392	170	1405	-.052	.109	.284	-.455
160	1959	-.010	.101	.397	-.525	170	1215	.023	.113	.463	-.346	170	1406	-.055	.096	.284	-.376
160	1960	-.035	.127	.492	-.676	170	1216	.019	.117	.476	-.330	170	1407	-.065	.102	.271	-.420
160	1961	.067	.127	.597	-.319	170	1217	-.012	.095	.338	-.367	170	1408	-.050	.099	.279	-.413
160	1962	.084	.124	.563	-.291	170	1218	-.008	.105	.384	-.330	170	1409	-.052	.100	.284	-.410
160	1963	.036	.110	.540	-.320	170	1219	-.003	.106	.566	-.334	170	1410	-.051	.099	.264	-.358
160	1964	-.018	.096	.358	-.407	170	1220	.021	.108	.462	-.347	170	1411	-.064	.112	.363	-.520
160	1965	-.021	.101	.308	-.375	170	1221	.024	.115	.472	-.305	170	1412	-.041	.109	.292	-.407
160	1966	-.017	.101	.293	-.433	170	1222	.015	.116	.614	-.318	170	1413	-.052	.104	.295	-.465
160	1967	-.001	.110	.311	-.356	170	1223	-.031	.105	.290	-.482	170	1414	-.050	.107	.263	-.479
160	1968	-.042	.103	.303	-.632	170	1224	.009	.117	.634	-.455	170	1415	-.052	.099	.300	-.381
170	1101	-.055	.102	.229	-.402	170	1225	.019	.114	.525	-.443	170	1416	-.053	.100	.239	-.696
170	1102	-.078	.118	.347	-.718	170	1226	.016	.103	.407	-.325	170	1417	-.057	.103	.273	-.394
170	1103	-.080	.122	.311	-.722	170	1227	.009	.096	.351	-.287	170	1418	-.046	.105	.267	-.417
170	1104	-.068	.106	.319	-.454	170	1228	-.044	.105	.262	-.494	170	1419	-.030	.106	.284	-.340

WD	TAP	CPMEAN	CPRMS	CPMAX	CPMIN	WD	TAP	CPMEAN	CPRMS	CPMAX	CPMIN	WD	TAP	CPMEAN	CPRMS	CPMAX	CPMIN
170	1420	-.050	.107	.301	-.427	170	1935	-.059	.099	.255	-.433	180	1117	-.027	.095	.469	-.316
170	1421	-.041	.116	.382	-.508	170	1936	-.076	.111	.229	-.458	180	1118	-.047	.101	.253	-.368
170	1422	-.086	.105	.255	-.518	170	1937	-.083	.109	.297	-.510	180	1119	-.034	.097	.305	-.343
170	1423	-.054	.099	.282	-.381	170	1938	-.003	.111	.494	-.335	180	1120	-.035	.098	.248	-.321
170	1424	-.046	.105	.304	-.554	170	1939	.004	.114	.448	-.363	180	1121	-.047	.092	.275	-.379
170	1425	-.042	.097	.298	-.350	170	1940	-.032	.102	.318	-.371	180	1122	-.051	.094	.275	-.387
170	1426	-.043	.099	.288	-.352	170	1941	-.031	.097	.320	-.358	180	1123	-.045	.099	.221	-.376
170	1427	-.042	.104	.366	-.371	170	1942	-.034	.094	.306	-.349	180	1124	-.034	.101	.352	-.414
170	1428	-.038	.101	.283	-.397	170	1943	-.047	.101	.270	-.405	180	1125	-.024	.102	.334	-.453
170	1429	-.038	.102	.301	-.361	170	1944	-.075	.098	.228	-.450	180	1126	-.029	.103	.294	-.407
170	1430	-.039	.106	.368	-.360	170	1945	-.027	.103	.280	-.366	180	1201	-.036	.098	.244	-.416
170	1431	-.026	.105	.308	-.357	170	1946	-.019	.101	.298	-.415	180	1202	-.042	.103	.277	-.405
170	1432	-.038	.102	.291	-.440	170	1947	-.030	.101	.392	-.361	180	1203	-.028	.099	.287	-.369
170	1433	-.040	.099	.243	-.453	170	1948	-.043	.112	.389	-.397	180	1204	-.038	.098	.359	-.355
170	1434	-.053	.099	.277	-.381	170	1949	-.022	.122	.429	-.389	180	1205	-.042	.104	.278	-.402
170	1435	-.036	.092	.246	-.373	170	1950	-.006	.121	.494	-.380	180	1206	-.043	.102	.271	-.393
170	1901	-.043	.103	.273	-.434	170	1951	-.061	.192	.267	-.415	180	1207	-.045	.094	.253	-.347
170	1902	.085	.103	.407	-.320	170	1952	-.030	.105	.342	-.418	180	1208	-.023	.093	.267	-.320
170	1903	.194	.091	.479	-.094	170	1953	-.029	.104	.353	-.385	180	1209	-.023	.086	.250	-.358
170	1904	-.002	.106	.347	-.364	170	1954	-.034	.102	.288	-.420	180	1210	-.027	.086	.261	-.390
170	1905	.046	.099	.389	-.266	170	1955	-.072	.118	.332	-.955	180	1211	-.077	.098	.250	-.425
170	1906	-.021	.098	.306	-.372	170	1956	.031	.118	.535	-.326	180	1212	-.067	.086	.282	-.385
170	1907	-.054	.094	.245	-.387	170	1957	-.039	.107	.294	-.441	180	1213	-.046	.088	.261	-.306
170	1908	-.065	.106	.240	-.455	170	1958	-.041	.096	.325	-.326	180	1214	-.041	.107	.277	-.442
170	1909	-.042	.105	.264	-.410	170	1959	-.037	.098	.288	-.377	180	1215	-.022	.096	.288	-.396
170	1910	-.057	.103	.284	-.501	170	1960	-.059	.118	.317	-.739	180	1216	-.010	.093	.369	-.325
170	1911	-.036	.093	.256	-.314	170	1961	.012	.105	.507	-.331	180	1217	-.034	.092	.296	-.268
170	1912	-.044	.099	.277	-.406	170	1962	.011	.108	.394	-.305	180	1218	-.028	.095	.277	-.303
170	1913	-.046	.099	.287	-.406	170	1963	-.013	.101	.316	-.353	180	1219	-.026	.102	.291	-.358
170	1914	-.057	.093	.251	-.349	170	1964	-.033	.102	.350	-.426	180	1220	-.019	.094	.318	-.297
170	1915	-.040	.102	.303	-.361	170	1965	-.037	.093	.335	-.310	180	1221	-.017	.097	.266	-.338
170	1916	-.054	.100	.308	-.367	170	1966	-.037	.096	.275	-.395	180	1222	-.016	.095	.388	-.336
170	1917	-.054	.094	.233	-.323	170	1967	-.036	.106	.294	-.426	180	1223	-.036	.091	.231	-.341
170	1918	-.045	.094	.271	-.361	170	1968	-.060	.111	.391	-.610	180	1224	-.016	.093	.280	-.361
170	1919	-.069	.116	.290	-.620	180	1101	-.040	.106	.326	-.441	180	1225	-.018	.097	.299	-.355
170	1920	-.011	.104	.466	-.333	180	1102	-.052	.101	.282	-.398	180	1226	-.017	.093	.307	-.338
170	1921	-.043	.102	.269	-.380	180	1103	-.050	.101	.230	-.366	180	1227	-.024	.090	.298	-.328
170	1922	-.047	.099	.272	-.454	180	1104	-.040	.101	.339	-.446	180	1228	-.030	.093	.288	-.335
170	1923	-.051	.095	.235	-.397	180	1105	-.033	.100	.308	-.434	180	1229	-.028	.086	.248	-.371
170	1924	-.051	.105	.375	-.382	180	1106	-.050	.101	.253	-.377	180	1301	-.031	.094	.254	-.301
170	1925	-.113	.116	.209	-.565	180	1107	-.037	.106	.262	-.433	180	1302	-.039	.103	.275	-.369
170	1926	-.032	.114	.387	-.392	180	1108	-.037	.101	.331	-.397	180	1303	-.053	.108	.302	-.348
170	1927	-.065	.102	.254	-.713	180	1109	-.032	.092	.300	-.385	180	1304	-.026	.108	.324	-.401
170	1928	-.054	.110	.310	-.445	180	1110	-.031	.092	.305	-.348	180	1305	-.025	.103	.353	-.401
170	1929	-.051	.103	.297	-.438	180	1111	-.028	.096	.285	-.327	180	1306	-.016	.096	.330	-.381
170	1930	-.069	.107	.251	-.451	180	1112	-.039	.107	.301	-.416	180	1307	-.028	.092	.299	-.324
170	1931	-.011	.096	.292	-.397	180	1113	-.032	.093	.282	-.332	180	1308	-.036	.100	.305	-.372
170	1932	-.010	.096	.334	-.305	180	1114	-.034	.100	.303	-.374	180	1309	-.022	.109	.308	-.420
170	1933	-.044	.109	.300	-.532	180	1115	-.033	.099	.266	-.389	180	1311	-.016	.103	.308	-.355
170	1934	-.058	.101	.301	-.358	180	1116	-.027	.097	.348	-.332	180	1312	-.020	.103	.350	-.383

WD	TAP	CPMEAN	CPRMS	CPMAX	CPMIN	WD	TAP	CPMEAN	CPRMS	CPMAX	CPMIN	WD	TAP	CPMEAN	CPRMS	CPMAX	CPMIN
180	1313	-.015	.102	.366	-.334	180	1432	-.035	.092	.270	-.362	180	1947	-.025	.096	.278	-.333
180	1314	-.009	.095	.280	-.335	180	1433	-.033	.097	.261	-.314	180	1948	-.028	.107	.331	-.392
180	1315	-.013	.094	.301	-.338	180	1434	-.040	.091	.281	-.365	180	1949	-.055	.103	.356	-.395
180	1316	-.018	.099	.299	-.337	180	1435	-.037	.090	.288	-.323	180	1950	-.047	.087	.207	-.365
180	1317	-.020	.101	.265	-.327	180	1901	-.032	.084	.234	-.380	180	1951	-.049	.093	.222	-.341
180	1318	-.034	.093	.251	-.327	180	1902	.094	.081	.331	-.184	180	1952	-.033	.096	.279	-.351
180	1319	-.028	.099	.238	-.365	180	1903	.196	.085	.462	-.068	180	1953	-.032	.093	.289	-.324
180	1320	-.021	.098	.347	-.384	180	1904	.014	.094	.331	-.292	180	1954	-.032	.100	.292	-.505
180	1321	-.016	.100	.326	-.407	180	1905	.047	.088	.362	-.227	180	1955	-.033	.102	.333	-.370
180	1322	-.014	.102	.293	-.332	180	1906	-.025	.097	.279	-.496	180	1956	-.015	.099	.299	-.391
180	1323	-.017	.109	.305	-.391	180	1907	-.028	.104	.359	-.428	180	1957	-.026	.100	.281	-.490
180	1324	-.025	.100	.362	-.399	180	1908	-.032	.099	.261	-.366	180	1958	-.030	.091	.277	-.375
180	1325	-.021	.091	.287	-.370	180	1909	-.031	.099	.291	-.453	180	1959	-.032	.101	.306	-.333
180	1326	-.019	.091	.297	-.335	180	1910	-.034	.092	.283	-.378	180	1960	-.036	.102	.299	-.408
180	1327	-.015	.099	.329	-.326	180	1911	-.030	.100	.306	-.353	180	1961	-.016	.099	.309	-.324
180	1328	-.020	.105	.297	-.428	180	1912	-.034	.103	.321	-.383	180	1962	-.018	.099	.287	-.323
180	1329	-.019	.095	.324	-.340	180	1913	-.033	.101	.281	-.347	180	1963	-.017	.094	.251	-.345
180	1330	-.040	.106	.311	-.437	180	1914	-.035	.091	.241	-.308	180	1964	-.025	.094	.311	-.415
180	1331	-.054	.105	.301	-.449	180	1915	-.028	.098	.273	-.363	180	1965	-.027	.102	.284	-.363
180	1401	-.037	.100	.324	-.360	180	1916	-.036	.092	.297	-.420	180	1966	-.030	.098	.289	-.316
180	1402	-.081	.085	.250	-.387	180	1917	-.031	.103	.312	-.383	180	1967	-.031	.091	.266	-.365
180	1403	-.064	.085	.226	-.324	180	1918	-.034	.097	.279	-.317	180	1968	-.036	.102	.307	-.462
180	1404	-.050	.095	.286	-.383	180	1919	-.037	.092	.276	-.356	190	1101	-.051	.095	.256	-.345
180	1405	-.034	.090	.254	-.335	180	1920	-.032	.100	.311	-.449	190	1102	-.062	.102	.280	-.432
180	1406	-.043	.092	.299	-.319	180	1921	-.032	.106	.326	-.443	190	1103	-.063	.096	.211	-.402
180	1407	-.037	.094	.270	-.321	180	1922	-.035	.100	.254	-.448	190	1104	-.036	.096	.369	-.368
180	1408	-.038	.101	.296	-.345	180	1923	-.038	.096	.256	-.338	190	1105	-.036	.091	.230	-.445
180	1409	-.037	.089	.296	-.296	180	1924	-.036	.104	.329	-.368	190	1106	-.047	.100	.282	-.408
180	1410	-.033	.095	.241	-.354	180	1925	-.074	.102	.273	-.544	190	1107	-.034	.095	.266	-.362
180	1411	-.038	.096	.305	-.389	180	1926	-.054	.089	.219	-.363	190	1108	-.034	.085	.248	-.304
180	1412	-.038	.092	.258	-.364	180	1927	-.044	.093	.224	-.346	190	1109	-.037	.100	.383	-.350
180	1413	-.035	.093	.263	-.364	180	1928	-.035	.098	.309	-.370	190	1110	-.036	.096	.271	-.308
180	1414	-.038	.095	.275	-.356	180	1929	-.036	.092	.299	-.335	190	1111	-.032	.096	.263	-.325
180	1415	-.033	.089	.278	-.345	180	1930	-.043	.101	.274	-.541	190	1112	-.032	.096	.287	-.341
180	1416	-.035	.088	.283	-.304	180	1931	-.028	.104	.361	-.356	190	1113	-.033	.094	.275	-.331
180	1417	-.032	.087	.244	-.316	180	1932	-.019	.089	.234	-.351	190	1114	-.029	.099	.333	-.368
180	1418	-.044	.102	.305	-.420	180	1933	-.033	.101	.296	-.470	190	1115	-.039	.094	.248	-.347
180	1419	-.035	.097	.293	-.340	180	1934	-.036	.093	.291	-.380	190	1116	-.036	.098	.279	-.373
180	1420	-.047	.103	.302	-.421	180	1935	-.034	.103	.306	-.363	190	1117	-.040	.102	.301	-.434
180	1421	-.048	.100	.221	-.364	180	1936	-.039	.105	.325	-.420	190	1118	-.046	.101	.278	-.413
180	1422	-.056	.089	.261	-.336	180	1937	-.043	.103	.291	-.398	190	1119	-.034	.088	.275	-.331
180	1423	-.038	.096	.286	-.377	180	1938	-.028	.102	.314	-.336	190	1120	-.038	.103	.248	-.413
180	1424	-.026	.094	.296	-.347	180	1939	-.021	.100	.269	-.353	190	1121	-.044	.092	.264	-.374
180	1425	-.035	.092	.311	-.295	180	1940	-.024	.094	.321	-.428	190	1122	-.038	.094	.284	-.376
180	1426	-.032	.095	.289	-.323	180	1941	-.025	.103	.313	-.390	190	1123	-.038	.094	.236	-.381
180	1427	-.027	.103	.316	-.343	180	1942	-.028	.099	.309	-.313	190	1124	-.028	.097	.370	-.377
180	1428	-.029	.092	.318	-.309	180	1943	-.029	.085	.247	-.331	190	1125	-.027	.094	.257	-.445
180	1429	-.027	.097	.259	-.370	180	1944	-.034	.088	.257	-.376	190	1126	-.030	.090	.307	-.329
180	1430	-.032	.095	.310	-.390	180	1945	-.026	.108	.346	-.449	190	1201	-.035	.081	.214	-.356
180	1431	-.032	.093	.267	-.362	180	1946	-.025	.101	.274	-.418	190	1202	-.039	.109	.378	-.388

WD	TAP	CPMEAN	CPRMS	CPMAX	CPMIN	WD	TAP	CPMEAN	CPRMS	CPMAX	CPMIN	WD	TAP	CPMEAN	CPRMS	CPMAX	CPMIN
190	1203	-.047	.104	.350	-.403	190	1325	-.009	.100	.384	-.342	190	1909	-.031	.087	.304	-.322
190	1204	-.058	.104	.281	-.373	190	1326	-.000	.097	.352	-.294	190	1910	-.029	.087	.218	-.316
190	1205	-.039	.110	.379	-.448	190	1327	-.006	.100	.308	-.308	190	1911	-.033	.091	.321	-.361
190	1206	-.057	.110	.347	-.497	190	1328	-.013	.099	.343	-.333	190	1912	-.032	.090	.266	-.313
190	1207	-.062	.106	.301	-.457	190	1329	-.026	.095	.281	-.331	190	1913	-.031	.088	.252	-.336
190	1208	-.041	.099	.266	-.335	190	1330	-.032	.113	.343	-.381	190	1914	-.037	.088	.258	-.280
190	1209	-.029	.089	.263	-.355	190	1331	-.036	.113	.333	-.415	190	1915	-.030	.094	.302	-.322
190	1210	-.037	.091	.241	-.350	190	1401	-.060	.095	.240	-.405	190	1916	-.039	.091	.286	-.397
190	1211	-.070	.092	.234	-.392	190	1402	-.091	.096	.329	-.368	190	1917	-.037	.091	.266	-.330
190	1212	-.071	.093	.352	-.329	190	1403	-.085	.091	.244	-.403	190	1918	-.035	.096	.302	-.325
190	1213	-.052	.087	.276	-.363	190	1404	-.061	.095	.270	-.391	190	1919	-.035	.097	.315	-.353
190	1214	-.025	.110	.388	-.344	190	1405	-.053	.102	.263	-.376	190	1920	-.032	.093	.291	-.296
190	1215	-.033	.094	.341	-.349	190	1406	-.053	.093	.301	-.399	190	1921	-.035	.095	.250	-.355
190	1216	-.011	.094	.313	-.369	190	1407	-.057	.095	.319	-.436	190	1922	-.029	.083	.222	-.349
190	1217	-.032	.088	.315	-.403	190	1408	-.046	.087	.188	-.322	190	1923	-.034	.095	.260	-.430
190	1218	-.036	.090	.354	-.307	190	1409	-.037	.090	.239	-.309	190	1924	-.039	.094	.305	-.449
190	1219	-.030	.086	.256	-.303	190	1410	-.034	.090	.248	-.340	190	1925	-.063	.107	.323	-.493
190	1220	-.037	.091	.244	-.313	190	1411	-.038	.090	.248	-.362	190	1926	-.040	.098	.279	-.392
190	1221	-.025	.092	.287	-.304	190	1412	-.043	.092	.261	-.343	190	1927	-.041	.088	.219	-.310
190	1222	-.029	.089	.262	-.349	190	1413	-.048	.092	.289	-.346	190	1928	-.039	.099	.307	-.406
190	1223	-.035	.089	.236	-.338	190	1414	-.030	.090	.282	-.329	190	1929	-.031	.086	.268	-.300
190	1224	-.004	.090	.309	-.275	190	1415	-.028	.083	.239	-.303	190	1930	-.035	.090	.254	-.357
190	1225	-.018	.090	.279	-.340	190	1416	-.035	.095	.372	-.356	190	1931	-.035	.082	.243	-.332
190	1226	-.029	.084	.253	-.293	190	1417	-.041	.092	.267	-.326	190	1932	-.025	.082	.258	-.283
190	1227	-.028	.094	.375	-.349	190	1418	-.059	.109	.304	-.434	190	1933	-.034	.090	.311	-.335
190	1228	-.034	.097	.295	-.343	190	1419	-.045	.090	.255	-.371	190	1934	-.033	.090	.239	-.330
190	1229	-.027	.088	.282	-.344	190	1420	-.071	.111	.295	-.470	190	1935	-.036	.093	.341	-.332
190	1301	-.011	.098	.283	-.356	190	1421	-.053	.108	.348	-.435	190	1936	-.038	.093	.246	-.332
190	1302	.001	.116	.498	-.328	190	1422	-.048	.089	.294	-.372	190	1937	-.038	.091	.247	-.352
190	1303	-.023	.120	.431	-.401	190	1423	-.034	.093	.320	-.332	190	1938	-.035	.096	.298	-.325
190	1304	-.004	.099	.315	-.330	190	1424	-.028	.096	.302	-.404	190	1939	-.025	.095	.320	-.321
190	1305	-.000	.092	.320	-.308	190	1425	-.031	.090	.330	-.377	190	1940	-.024	.093	.309	-.384
190	1306	.006	.106	.476	-.353	190	1426	-.042	.093	.385	-.335	190	1941	-.022	.093	.279	-.368
190	1307	-.003	.099	.373	-.293	190	1427	-.022	.088	.257	-.310	190	1942	-.020	.096	.317	-.321
190	1308	-.021	.105	.349	-.402	190	1428	-.023	.092	.267	-.291	190	1943	-.017	.092	.307	-.325
190	1309	-.005	.102	.316	-.338	190	1429	-.025	.092	.275	-.324	190	1944	-.020	.081	.254	-.242
190	1311	.002	.104	.426	-.368	190	1430	-.022	.091	.266	-.350	190	1945	-.026	.090	.269	-.362
190	1312	.018	.106	.418	-.366	190	1431	-.031	.093	.266	-.353	190	1946	-.006	.086	.249	-.332
190	1313	.013	.105	.345	-.324	190	1432	-.042	.090	.292	-.322	190	1947	-.008	.098	.312	-.381
190	1314	.008	.100	.315	-.371	190	1433	-.046	.103	.239	-.402	190	1948	-.011	.097	.317	-.373
190	1315	-.016	.106	.358	-.387	190	1434	-.055	.088	.216	-.324	190	1949	-.054	.107	.343	-.454
190	1316	-.019	.088	.273	-.327	190	1435	-.052	.098	.345	-.381	190	1950	-.029	.097	.300	-.380
190	1317	-.010	.107	.305	-.408	190	1901	-.032	.088	.255	-.351	190	1951	-.051	.088	.204	-.320
190	1318	-.012	.093	.281	-.307	190	1902	.103	.089	.396	-.219	190	1952	-.021	.098	.323	-.358
190	1319	-.014	.095	.279	-.357	190	1903	.188	.080	.438	-.058	190	1953	-.012	.086	.316	-.298
190	1320	-.015	.097	.363	-.345	190	1904	.011	.095	.337	-.310	190	1954	-.016	.090	.253	-.292
190	1321	-.016	.093	.290	-.436	190	1905	.046	.081	.321	-.208	190	1955	-.017	.082	.311	-.298
190	1322	-.017	.091	.345	-.310	190	1906	-.020	.087	.249	-.307	190	1956	-.015	.092	.351	-.293
190	1323	-.026	.097	.261	-.363	190	1907	-.029	.082	.260	-.296	190	1957	-.016	.093	.360	-.326
190	1324	-.010	.085	.284	-.284	190	1908	-.033	.090	.271	-.303	190	1958	-.016	.089	.340	-.322

WD	TAP	CPMEAN	CPRMS	CPMAX	CPMIN	WD	TAP	CPMEAN	CPRMS	CPMAX	CPMIN	WD	TAP	CPMEAN	CPRMS	CPMAX	CPMIN
190	1959	-.021	.092	.353	-.309	200	1215	-.035	.104	.344	-.338	200	1406	-.088	.101	.255	-.379
190	1960	-.022	.090	.272	-.330	200	1216	.001	.099	.307	-.376	200	1407	-.073	.118	.336	-.487
190	1961	-.022	.089	.251	-.326	200	1217	-.054	.097	.270	-.330	200	1408	-.053	.096	.290	-.413
190	1962	.005	.095	.300	-.262	200	1218	-.043	.109	.315	-.359	200	1409	-.043	.092	.297	-.355
190	1963	.004	.096	.348	-.287	200	1219	-.032	.097	.312	-.347	200	1410	-.035	.091	.278	-.307
190	1964	.001	.095	.359	-.350	200	1220	-.050	.093	.310	-.353	200	1411	-.045	.093	.321	-.350
190	1965	-.017	.092	.269	-.315	200	1221	-.020	.094	.344	-.298	200	1412	-.053	.104	.377	-.374
190	1966	-.020	.095	.300	-.320	200	1222	-.037	.092	.322	-.324	200	1413	-.064	.095	.204	-.419
190	1967	-.023	.097	.334	-.352	200	1223	-.042	.101	.344	-.316	200	1414	-.040	.089	.260	-.336
190	1968	-.025	.093	.304	-.279	200	1224	.011	.096	.346	-.275	200	1415	-.041	.099	.250	-.334
200	1101	-.064	.117	.392	-.451	200	1225	-.018	.092	.283	-.364	200	1416	-.036	.092	.311	-.315
200	1102	-.081	.112	.279	-.401	200	1226	-.045	.100	.259	-.322	200	1417	-.043	.088	.236	-.324
200	1103	-.077	.105	.263	-.375	200	1227	-.027	.092	.280	-.308	200	1418	-.071	.102	.230	-.392
200	1104	-.049	.091	.343	-.323	200	1228	-.036	.094	.247	-.325	200	1419	-.056	.099	.363	-.461
200	1105	-.041	.091	.260	-.345	200	1229	-.037	.095	.249	-.371	200	1420	-.090	.105	.218	-.458
200	1106	-.057	.106	.297	-.414	200	1301	-.004	.106	.367	-.314	200	1421	-.064	.113	.374	-.438
200	1107	-.043	.095	.241	-.344	200	1302	.018	.120	.452	-.432	200	1422	-.045	.092	.206	-.361
200	1108	-.039	.091	.265	-.312	200	1303	-.030	.124	.404	-.481	200	1423	-.043	.099	.309	-.349
200	1109	-.044	.098	.320	-.353	200	1304	.006	.106	.442	-.358	200	1424	-.032	.098	.339	-.404
200	1110	-.048	.099	.253	-.415	200	1305	.010	.100	.483	-.306	200	1425	-.046	.098	.268	-.340
200	1111	-.049	.094	.244	-.370	200	1306	.015	.105	.357	-.328	200	1426	-.052	.109	.291	-.392
200	1112	-.041	.099	.295	-.331	200	1307	-.003	.103	.464	-.419	200	1427	-.022	.098	.302	-.358
200	1113	-.038	.095	.250	-.355	200	1308	-.016	.110	.407	-.386	200	1428	-.027	.096	.328	-.349
200	1114	-.039	.093	.252	-.347	200	1309	.007	.113	.349	-.336	200	1429	-.024	.095	.301	-.319
200	1115	-.043	.097	.276	-.345	200	1311	.021	.098	.437	-.315	200	1430	-.027	.095	.338	-.355
200	1116	-.037	.094	.276	-.374	200	1312	.011	.103	.413	-.336	200	1431	-.037	.104	.411	-.357
200	1117	-.048	.101	.364	-.432	200	1313	.003	.100	.395	-.325	200	1432	-.051	.091	.192	-.384
200	1118	-.057	.106	.295	-.413	200	1314	.019	.099	.376	-.347	200	1433	-.048	.092	.226	-.381
200	1119	-.045	.100	.361	-.457	200	1315	.001	.098	.306	-.304	200	1434	-.083	.105	.223	-.391
200	1120	-.039	.093	.228	-.370	200	1316	-.021	.100	.373	-.401	200	1435	-.069	.099	.325	-.399
200	1121	-.060	.102	.296	-.355	200	1317	-.010	.097	.367	-.330	200	1901	-.035	.097	.289	-.324
200	1122	-.051	.102	.314	-.363	200	1318	-.012	.101	.341	-.331	200	1902	.093	.100	.441	-.252
200	1123	-.047	.102	.297	-.361	200	1319	-.010	.104	.323	-.347	200	1903	.195	.095	.490	-.135
200	1124	-.042	.092	.345	-.328	200	1320	-.005	.093	.315	-.293	200	1904	.008	.088	.330	-.274
200	1125	-.033	.094	.279	-.355	200	1321	-.000	.099	.440	-.336	200	1905	.038	.102	.370	-.328
200	1126	-.033	.094	.292	-.357	200	1322	.002	.101	.371	-.350	200	1906	-.029	.103	.289	-.363
200	1201	-.043	.108	.278	-.382	200	1323	-.027	.099	.302	-.358	200	1907	-.037	.117	.359	-.396
200	1202	-.029	.115	.361	-.484	200	1324	-.004	.092	.356	-.297	200	1908	-.039	.107	.265	-.396
200	1203	-.055	.105	.327	-.405	200	1325	-.011	.097	.345	-.317	200	1909	-.033	.095	.256	-.341
200	1204	-.063	.100	.242	-.388	200	1326	.003	.099	.304	-.401	200	1910	-.030	.102	.333	-.305
200	1205	-.025	.118	.383	-.539	200	1327	.008	.097	.588	-.271	200	1911	-.031	.108	.328	-.371
200	1206	-.048	.114	.348	-.524	200	1328	-.006	.106	.337	-.320	200	1912	-.034	.106	.313	-.379
200	1207	-.076	.105	.334	-.464	200	1329	-.027	.096	.247	-.357	200	1913	-.034	.091	.253	-.323
200	1208	-.046	.096	.247	-.376	200	1330	-.040	.106	.310	-.389	200	1914	-.039	.099	.324	-.316
200	1209	-.038	.105	.302	-.449	200	1331	-.046	.106	.315	-.395	200	1915	-.031	.089	.298	-.322
200	1210	-.043	.099	.260	-.336	200	1401	-.078	.100	.265	-.447	200	1916	-.039	.107	.253	-.433
200	1211	-.079	.087	.228	-.355	200	1402	-.098	.094	.250	-.447	200	1917	-.043	.102	.257	-.396
200	1212	-.073	.090	.286	-.406	200	1403	-.093	.095	.200	-.455	200	1918	-.035	.102	.322	-.396
200	1213	-.049	.090	.236	-.330	200	1404	-.086	.107	.255	-.463	200	1919	-.036	.104	.360	-.399
200	1214	-.013	.117	.407	-.456	200	1405	-.061	.098	.242	-.423	200	1920	-.039	.100	.295	-.374

WD	TAP	CPMEAN	CPRMS	CPMAX	CPMIN	WD	TAP	CPMEAN	CPRMS	CPMAX	CPMIN	WD	TAP	CPMEAN	CPRMS	CPMAX	CPMIN
200	1921	-.037	.118	.392	-.426	210	1103	-.075	.093	.201	-.430	210	1227	-.032	.090	.304	-.327
200	1922	-.042	.109	.297	-.426	210	1104	-.038	.097	.285	-.441	210	1228	-.042	.089	.291	-.357
200	1923	-.043	.099	.235	-.352	210	1105	-.034	.093	.287	-.365	210	1229	-.028	.091	.242	-.315
200	1924	-.045	.099	.270	-.422	210	1106	-.063	.097	.268	-.407	210	1301	-.019	.109	.358	-.388
200	1925	-.071	.114	.351	-.455	210	1107	-.043	.089	.267	-.379	210	1302	.008	.119	.399	-.357
200	1926	-.060	.104	.300	-.429	210	1108	-.040	.094	.312	-.379	210	1303	-.035	.123	.368	-.373
200	1927	-.049	.103	.275	-.434	210	1109	-.041	.092	.264	-.367	210	1304	-.006	.096	.369	-.376
200	1928	-.044	.092	.298	-.340	210	1110	-.040	.090	.332	-.379	210	1305	-.008	.099	.325	-.362
200	1929	-.043	.107	.297	-.445	210	1111	-.044	.085	.198	-.326	210	1306	-.002	.095	.294	-.275
200	1930	-.050	.108	.284	-.409	210	1112	-.036	.091	.285	-.328	210	1307	-.012	.095	.406	-.365
200	1931	-.050	.116	.356	-.418	210	1113	-.036	.097	.299	-.441	210	1308	-.017	.099	.401	-.312
200	1932	-.035	.100	.259	-.340	210	1114	-.033	.087	.256	-.340	210	1309	.001	.097	.362	-.325
200	1933	-.042	.097	.292	-.354	210	1115	-.043	.091	.285	-.353	210	1311	-.000	.092	.298	-.336
200	1934	-.038	.106	.311	-.337	210	1116	-.042	.085	.247	-.296	210	1312	.006	.099	.354	-.344
200	1935	-.036	.110	.340	-.404	210	1117	-.044	.094	.296	-.344	210	1313	-.011	.093	.357	-.307
200	1936	-.043	.108	.310	-.401	210	1118	-.059	.096	.258	-.398	210	1314	.007	.091	.324	-.289
200	1937	-.046	.093	.243	-.322	210	1119	-.037	.092	.243	-.396	210	1315	.003	.096	.371	-.297
200	1938	-.040	.107	.353	-.353	210	1120	-.040	.088	.252	-.331	210	1316	-.013	.090	.240	-.344
200	1939	-.033	.091	.275	-.337	210	1121	-.058	.093	.223	-.379	210	1317	-.015	.090	.315	-.294
200	1940	-.029	.109	.268	-.469	210	1122	-.050	.094	.222	-.389	210	1318	-.023	.092	.238	-.355
200	1941	-.025	.105	.332	-.399	210	1123	-.048	.092	.219	-.372	210	1319	-.018	.091	.282	-.349
200	1942	-.015	.104	.374	-.393	210	1124	-.030	.098	.297	-.429	210	1320	-.009	.099	.299	-.445
200	1943	-.013	.099	.342	-.342	210	1125	-.027	.095	.298	-.374	210	1321	-.005	.097	.352	-.343
200	1944	-.022	.088	.262	-.316	210	1126	-.026	.091	.351	-.303	210	1322	.001	.094	.367	-.319
200	1945	-.021	.121	.425	-.425	210	1201	-.048	.115	.261	-.434	210	1323	-.026	.092	.302	-.378
200	1946	.000	.112	.466	-.330	210	1202	-.035	.113	.394	-.412	210	1324	-.018	.096	.308	-.371
200	1947	-.001	.102	.351	-.342	210	1203	-.051	.103	.327	-.451	210	1325	-.021	.091	.258	-.289
200	1948	-.001	.104	.471	-.391	210	1204	-.062	.088	.210	-.321	210	1326	-.003	.095	.416	-.348
200	1949	-.059	.114	.344	-.414	210	1205	-.031	.115	.442	-.463	210	1327	-.002	.087	.331	-.299
200	1950	-.040	.106	.335	-.403	210	1206	-.049	.114	.399	-.450	210	1328	-.010	.093	.294	-.330
200	1951	-.063	.103	.241	-.419	210	1207	-.068	.097	.244	-.487	210	1329	-.026	.098	.328	-.434
200	1952	-.014	.095	.372	-.328	210	1208	-.042	.089	.312	-.368	210	1330	-.042	.108	.293	-.488
200	1953	-.006	.108	.373	-.333	210	1209	-.016	.094	.256	-.341	210	1331	-.050	.107	.271	-.494
200	1954	-.007	.108	.383	-.353	210	1210	-.041	.095	.293	-.385	210	1401	-.061	.107	.226	-.406
200	1955	-.012	.117	.379	-.409	210	1211	-.074	.099	.310	-.351	210	1402	-.104	.094	.198	-.390
200	1956	-.009	.110	.338	-.374	210	1212	-.084	.096	.251	-.368	210	1403	-.096	.087	.183	-.427
200	1957	-.009	.099	.313	-.331	210	1213	-.053	.086	.183	-.349	210	1404	-.075	.093	.268	-.411
200	1958	-.010	.103	.343	-.312	210	1214	-.018	.112	.348	-.321	210	1405	-.051	.093	.250	-.328
200	1959	-.013	.111	.384	-.334	210	1215	-.028	.089	.251	-.318	210	1406	-.072	.096	.215	-.376
200	1960	-.016	.108	.402	-.377	210	1216	-.002	.095	.403	-.344	210	1407	-.070	.096	.242	-.388
200	1961	-.009	.094	.301	-.304	210	1217	-.039	.087	.217	-.306	210	1408	-.049	.093	.268	-.334
200	1962	.024	.115	.437	-.309	210	1218	-.042	.088	.287	-.341	210	1409	-.036	.096	.249	-.402
200	1963	.015	.097	.349	-.269	210	1219	-.030	.093	.318	-.304	210	1410	-.042	.082	.283	-.262
200	1964	-.001	.113	.305	-.417	210	1220	-.037	.096	.251	-.380	210	1411	-.048	.098	.303	-.438
200	1965	-.010	.107	.346	-.384	210	1221	-.023	.086	.321	-.290	210	1412	-.056	.105	.319	-.385
200	1966	-.014	.104	.405	-.392	210	1222	-.039	.096	.294	-.417	210	1413	-.073	.090	.206	-.368
200	1967	-.020	.104	.359	-.358	210	1223	-.045	.102	.308	-.326	210	1414	-.041	.090	.222	-.360
200	1968	-.027	.100	.317	-.372	210	1224	-.003	.089	.267	-.307	210	1415	-.028	.098	.306	-.354
210	1101	-.049	.100	.247	-.330	210	1225	-.021	.092	.250	-.360	210	1416	-.039	.090	.277	-.334
210	1102	-.075	.100	.223	-.441	210	1226	-.028	.100	.312	-.349	210	1417	-.049	.083	.282	-.339

WD	TAP	CPMEAN	CPRMS	CPMAX	CPMIN
210	1418	-.064	.105	.251	-.463
210	1419	-.049	.091	.197	-.361
210	1420	-.080	.108	.244	-.474
210	1421	-.068	.105	.281	-.488
210	1422	-.051	.088	.219	-.383
210	1423	-.038	.087	.278	-.303
210	1424	-.035	.096	.307	-.332
210	1425	-.035	.091	.248	-.312
210	1426	-.053	.091	.270	-.380
210	1427	-.021	.094	.304	-.313
210	1428	-.024	.097	.261	-.405
210	1429	-.031	.086	.306	-.276
210	1430	-.031	.098	.312	-.411
210	1431	-.041	.104	.329	-.360
210	1432	-.060	.087	.226	-.324
210	1433	-.051	.088	.228	-.319
210	1434	-.062	.102	.292	-.419
210	1435	-.065	.094	.273	-.349
210	1901	-.039	.093	.271	-.362
210	1902	.094	.104	.399	-.245
210	1903	.196	.093	.567	-.119
210	1904	.015	.111	.504	-.316
210	1905	.042	.104	.416	-.344
210	1906	-.022	.099	.320	-.413
210	1907	-.029	.110	.366	-.342
210	1908	-.029	.109	.333	-.424
210	1909	-.028	.111	.326	-.383
210	1910	-.029	.107	.348	-.412
210	1911	-.028	.101	.311	-.388
210	1912	-.034	.106	.336	-.357
210	1913	-.028	.098	.358	-.306
210	1914	-.030	.097	.259	-.284
210	1915	-.031	.105	.296	-.432
210	1916	-.033	.110	.320	-.352
210	1917	-.038	.101	.333	-.357
210	1918	-.035	.104	.273	-.349
210	1919	-.031	.104	.303	-.331
210	1920	-.035	.106	.295	-.413
210	1921	-.031	.099	.262	-.330
210	1922	-.041	.118	.287	-.379
210	1923	-.038	.107	.299	-.410
210	1924	-.038	.110	.284	-.427
210	1925	-.062	.108	.264	-.453
210	1926	-.055	.110	.267	-.421
210	1927	-.046	.098	.380	-.353
210	1928	-.033	.114	.461	-.372
210	1929	-.036	.109	.369	-.434
210	1930	-.038	.102	.315	-.429
210	1931	-.041	.110	.337	-.350
210	1932	-.024	.100	.294	-.372
210	1933	-.036	.113	.339	-.409
210	1934	-.033	.108	.342	-.420
210	1935	-.032	.104	.310	-.412
210	1936	-.041	.107	.339	-.364
210	1937	-.036	.100	.355	-.331
210	1938	-.027	.106	.333	-.302
210	1939	-.029	.107	.296	-.479
210	1940	-.024	.112	.339	-.356
210	1941	-.029	.103	.367	-.360
210	1942	-.020	.105	.296	-.331
210	1943	-.013	.100	.283	-.286
210	1944	-.021	.093	.236	-.309
210	1945	-.022	.100	.277	-.296
210	1946	-.014	.117	.314	-.352
210	1947	-.009	.109	.337	-.385
210	1948	-.004	.114	.420	-.383
210	1949	-.053	.107	.293	-.493
210	1950	-.038	.107	.293	-.390
210	1951	-.057	.098	.375	-.363
210	1952	-.027	.114	.470	-.363
210	1953	-.014	.108	.388	-.387
210	1954	-.018	.101	.325	-.426
210	1955	-.014	.111	.385	-.350
210	1956	-.002	.113	.367	-.409
210	1957	-.017	.112	.388	-.385
210	1958	-.020	.108	.364	-.391
210	1959	-.017	.102	.378	-.417
210	1960	-.026	.106	.332	-.350
210	1961	-.009	.099	.397	-.298
210	1962	.005	.105	.339	-.293
210	1963	-.003	.105	.340	-.398
210	1964	-.010	.112	.310	-.387
210	1965	-.024	.102	.366	-.350
210	1966	-.024	.106	.306	-.330
210	1967	-.019	.104	.293	-.309
210	1968	-.029	.106	.266	-.390
220	1101	-.056	.106	.277	-.422
220	1102	-.065	.098	.347	-.349
220	1103	-.060	.096	.287	-.371
220	1104	-.033	.088	.244	-.318
220	1105	-.034	.094	.284	-.358
220	1106	-.051	.097	.319	-.346
220	1107	-.035	.084	.306	-.329
220	1108	-.036	.089	.241	-.413
220	1109	-.031	.091	.281	-.371
220	1110	-.033	.097	.250	-.352
220	1111	-.031	.092	.320	-.326
220	1112	-.033	.091	.292	-.368
220	1113	-.034	.097	.310	-.337
220	1114	-.031	.103	.265	-.340
220	1115	-.036	.093	.253	-.345
220	1116	-.027	.098	.236	-.447
220	1117	-.031	.088	.265	-.300
220	1118	-.047	.097	.316	-.350
220	1119	-.033	.098	.267	-.380
220	1120	-.033	.090	.301	-.345
220	1121	-.044	.093	.238	-.327
220	1122	-.041	.095	.259	-.326
220	1123	-.037	.097	.288	-.351
220	1124	-.025	.089	.248	-.310
220	1125	-.022	.096	.302	-.363
220	1126	-.021	.097	.297	-.323
220	1201	-.054	.103	.298	-.475
220	1202	-.055	.116	.321	-.511
220	1203	-.054	.111	.268	-.501
220	1204	-.047	.101	.221	-.424
220	1205	-.061	.121	.304	-.539
220	1206	-.070	.119	.278	-.519
220	1207	-.054	.090	.235	-.341
220	1208	-.028	.090	.331	-.380
220	1209	-.029	.084	.214	-.348
220	1210	-.034	.091	.246	-.389
220	1211	-.102	.098	.274	-.489
220	1212	-.063	.096	.241	-.344
220	1213	-.042	.096	.303	-.351
220	1214	-.039	.114	.346	-.442
220	1215	-.037	.096	.262	-.396
220	1216	-.010	.097	.281	-.413
220	1217	-.032	.084	.285	-.286
220	1218	-.024	.090	.249	-.410
220	1219	-.028	.098	.268	-.377
220	1220	-.032	.091	.251	-.376
220	1221	-.020	.086	.259	-.288
220	1222	-.032	.086	.282	-.292
220	1223	-.030	.105	.293	-.371
220	1224	-.015	.090	.321	-.311
220	1225	-.008	.091	.281	-.318
220	1226	-.032	.098	.276	-.424
220	1227	-.023	.092	.281	-.305
220	1228	-.029	.090	.328	-.383
220	1229	-.033	.084	.207	-.355
220	1301	-.024	.101	.319	-.360
220	1302	.017	.117	.407	-.352
220	1303	-.008	.120	.369	-.360
220	1304	-.018	.090	.394	-.327
220	1305	-.017	.093	.299	-.335
220	1306	-.002	.097	.315	-.340
220	1307	-.013	.098	.301	-.343
220	1308	-.038	.097	.358	-.341
220	1309	-.018	.095	.291	-.352

WD	TAP	CPMEAN	CPRMS	CPMAX	CPMIN
220	1311	-.009	.109	.341	-.335
220	1312	-.004	.098	.371	-.346
220	1313	-.003	.105	.409	-.413
220	1314	-.006	.087	.293	-.258
220	1315	-.016	.096	.346	-.373
220	1316	-.020	.096	.265	-.329
220	1317	-.022	.089	.344	-.312
220	1318	-.028	.095	.238	-.296
220	1319	-.029	.099	.307	-.373
220	1320	-.022	.090	.248	-.299
220	1321	-.020	.094	.299	-.344
220	1322	-.019	.097	.287	-.331
220	1323	-.025	.088	.310	-.333
220	1324	-.022	.090	.248	-.414
220	1325	-.018	.090	.297	-.342
220	1326	-.016	.095	.246	-.334
220	1327	-.019	.091	.311	-.320
220	1328	-.023	.092	.280	-.334
220	1329	-.029	.097	.321	-.317
220	1330	-.034	.108	.282	-.478
220	1331	-.043	.107	.267	-.482
220	1401	-.051	.096	.249	-.403
220	1402	-.084	.100	.252	-.367
220	1403	-.078	.100	.278	-.411
220	1404	-.061	.103	.247	-.416
220	1405	-.045	.095	.260	-.401
220	1406	-.066	.089	.253	-.467
220	1407	-.051	.096	.256	-.435
220	1408	-.044	.097	.253	-.391
220	1409	-.038	.089	.250	-.363
220	1410	-.032	.085	.244	-.299
220	1411	-.039	.088	.297	-.300
220	1412	-.032	.106	.300	-.360
220	1413	-.046	.088	.270	-.350
220	1414	-.020	.092	.269	-.342
220	1415	-.037	.098	.273	-.445
220	1416	-.026	.091	.259	-.314
220	1417	-.032	.085	.267	-.350
220	1418	-.058	.107	.270	-.464
220	1419	-.045	.099	.249	-.378
220	1420	-.075	.113	.250	-.478
220	1421	-.050	.103	.315	-.385
220	1422	-.041	.098	.299	-.340
220	1423	-.042	.099	.260	-.395
220	1424	-.023	.097	.255	-.403
220	1425	-.033	.086	.279	-.306
220	1426	-.038	.093	.243	-.449
220	1427	-.025	.099	.265	-.362
220	1428	-.030	.090	.260	-.359
220	1429	-.026	.088	.258	-.303
220	1430	-.029	.088	.293	-.307
220	1431	-.025	.107	.323	-.369
220	1432	-.042	.086	.271	-.333
220	1433	-.045	.090	.285	-.370
220	1434	-.070	.102	.227	-.509
220	1435	-.052	.097	.258	-.356
220	1901	-.034	.090	.251	-.409
220	1902	.108	.105	.501	-.257
220	1903	.208	.094	.516	-.093
220	1904	.013	.106	.337	-.291
220	1905	.045	.107	.397	-.340
220	1906	-.022	.102	.407	-.367
220	1907	-.026	.108	.321	-.345
220	1908	-.034	.101	.254	-.447
220	1909	-.027	.104	.264	-.343
220	1910	-.034	.111	.279	-.392
220	1911	-.030	.099	.285	-.345
220	1912	-.032	.115	.412	-.382
220	1913	-.030	.105	.235	-.403
220	1914	-.037	.096	.292	-.322
220	1915	-.030	.100	.232	-.349
220	1916	-.033	.114	.300	-.439
220	1917	-.033	.108	.274	-.345
220	1918	-.030	.106	.373	-.362
220	1919	-.031	.113	.321	-.385
220	1920	-.026	.109	.383	-.387
220	1921	-.033	.104	.315	-.343
220	1922	-.034	.105	.334	-.473
220	1923	-.034	.099	.285	-.366
220	1924	-.030	.095	.290	-.396
220	1925	-.044	.106	.314	-.427
220	1926	-.038	.112	.370	-.425
220	1927	-.038	.101	.293	-.376
220	1928	-.035	.109	.284	-.353
220	1929	-.034	.111	.338	-.443
220	1930	-.037	.105	.409	-.382
220	1931	-.031	.109	.317	-.341
220	1932	-.024	.092	.229	-.389
220	1933	-.033	.106	.266	-.405
220	1934	-.039	.113	.284	-.397
220	1935	-.034	.102	.294	-.363
220	1936	-.037	.117	.414	-.402
220	1937	-.033	.106	.240	-.397
220	1938	-.033	.102	.332	-.356
220	1939	-.025	.100	.248	-.356
220	1940	-.029	.117	.314	-.443
220	1941	-.028	.110	.294	-.350
220	1942	-.024	.107	.388	-.346
220	1943	-.025	.109	.304	-.358
220	1944	-.028	.097	.301	-.341
220	1945	-.030	.108	.412	-.368
220	1946	-.017	.109	.399	-.448
220	1947	-.022	.102	.317	-.369
220	1948	-.016	.097	.302	-.402
220	1949	-.037	.104	.323	-.365
220	1950	-.031	.111	.373	-.419
220	1951	-.050	.103	.308	-.388
220	1952	-.029	.107	.297	-.352
220	1953	-.023	.111	.328	-.434
220	1954	-.021	.105	.386	-.365
220	1955	-.026	.108	.319	-.364
220	1956	-.021	.101	.269	-.453
220	1957	-.024	.106	.262	-.344
220	1958	-.031	.112	.313	-.380
220	1959	-.030	.100	.287	-.352
220	1960	-.032	.115	.414	-.372
220	1961	-.019	.105	.239	-.396
220	1962	-.015	.104	.352	-.319
220	1963	-.010	.098	.300	-.333
220	1964	-.011	.116	.364	-.411
220	1965	-.028	.110	.303	-.367
220	1966	-.024	.108	.367	-.344
220	1967	-.030	.115	.339	-.393
220	1968	-.030	.108	.372	-.368
230	1101	-.064	.108	.328	-.412
230	1102	-.068	.106	.243	-.417
230	1103	-.066	.098	.391	-.361
230	1104	-.046	.097	.306	-.363
230	1105	-.040	.094	.241	-.385
230	1106	-.056	.104	.233	-.382
230	1107	-.040	.092	.261	-.377
230	1108	-.035	.088	.322	-.325
230	1109	-.043	.104	.331	-.358
230	1110	-.042	.101	.326	-.450
230	1111	-.039	.093	.286	-.402
230	1112	-.036	.091	.325	-.377
230	1113	-.035	.093	.228	-.391
230	1114	-.031	.089	.272	-.352
230	1115	-.040	.089	.264	-.319
230	1116	-.040	.089	.267	-.358
230	1117	-.037	.096	.259	-.344
230	1118	-.047	.104	.243	-.371
230	1119	-.044	.100	.231	-.391
230	1120	-.040	.097	.286	-.441
230	1121	-.053	.096	.323	-.380
230	1122	-.050	.098	.339	-.374
230	1123	-.042	.095	.295	-.338
230	1124	-.036	.098	.323	-.323
230	1125	-.030	.096	.278	-.393
230	1126	-.030	.087	.240	-.340

WD	TAP	CPMEAN	CPRMS	CPMAX	CPMIN
230	1201	-.064	.118	.363	-.460
230	1202	-.080	.118	.333	-.507
230	1203	-.080	.110	.293	-.454
230	1204	-.064	.092	.249	-.378
230	1205	-.089	.124	.370	-.563
230	1206	-.111	.123	.319	-.602
230	1207	-.067	.100	.237	-.385
230	1208	-.046	.093	.255	-.355
230	1209	-.036	.094	.289	-.377
230	1210	-.040	.098	.254	-.369
230	1211	-.084	.098	.259	-.397
230	1212	-.072	.095	.212	-.370
230	1213	-.056	.091	.287	-.363
230	1214	-.045	.104	.311	-.453
230	1215	-.023	.089	.270	-.389
230	1216	-.026	.094	.315	-.298
230	1217	-.043	.091	.267	-.383
230	1218	-.057	.091	.275	-.373
230	1219	-.038	.098	.254	-.379
230	1220	-.021	.085	.273	-.265
230	1221	-.023	.091	.297	-.322
230	1222	-.029	.085	.300	-.335
230	1223	-.036	.091	.305	-.370
230	1224	-.026	.091	.283	-.347
230	1225	-.032	.095	.265	-.344
230	1226	-.024	.093	.331	-.299
230	1227	-.031	.094	.300	-.347
230	1228	-.042	.091	.273	-.359
230	1229	-.034	.092	.271	-.355
230	1301	-.013	.110	.362	-.391
230	1302	.031	.111	.517	-.266
230	1303	.009	.111	.408	-.312
230	1304	-.016	.099	.316	-.378
230	1305	.001	.098	.320	-.309
230	1306	-.004	.110	.394	-.329
230	1307	-.003	.107	.382	-.431
230	1308	-.030	.109	.288	-.401
230	1309	-.016	.095	.356	-.351
230	1311	.001	.099	.309	-.368
230	1312	.001	.096	.341	-.307
230	1313	.009	.096	.441	-.304
230	1314	-.011	.099	.319	-.305
230	1315	-.023	.088	.229	-.301
230	1316	-.032	.101	.258	-.387
230	1317	-.012	.100	.306	-.429
230	1318	-.032	.097	.354	-.342
230	1319	-.030	.096	.312	-.316
230	1320	-.030	.099	.318	-.391
230	1321	-.026	.094	.248	-.363
230	1322	-.027	.088	.241	-.342
230	1323	-.027	.095	.265	-.369
230	1324	-.008	.090	.329	-.306
230	1325	-.022	.104	.384	-.349
230	1326	-.013	.102	.354	-.396
230	1327	-.017	.094	.296	-.347
230	1328	-.021	.093	.332	-.353
230	1329	-.026	.094	.235	-.382
230	1330	-.022	.107	.366	-.397
230	1331	-.032	.106	.356	-.444
230	1401	-.075	.116	.357	-.410
230	1402	-.103	.100	.201	-.435
230	1403	-.106	.097	.241	-.430
230	1404	-.051	.098	.257	-.440
230	1405	-.048	.087	.248	-.350
230	1406	-.089	.099	.228	-.421
230	1407	-.071	.096	.266	-.384
230	1408	-.056	.096	.257	-.386
230	1409	-.031	.084	.268	-.306
230	1410	-.039	.089	.295	-.322
230	1411	-.042	.087	.306	-.346
230	1412	-.043	.092	.306	-.357
230	1413	-.070	.093	.206	-.422
230	1414	-.051	.095	.247	-.357
230	1415	-.033	.093	.317	-.315
230	1416	-.038	.094	.290	-.362
230	1417	-.049	.084	.238	-.334
230	1418	-.061	.100	.305	-.421
230	1419	-.052	.100	.231	-.388
230	1420	-.085	.105	.311	-.445
230	1421	-.045	.111	.318	-.383
230	1422	-.056	.092	.289	-.377
230	1423	-.031	.092	.291	-.416
230	1424	-.035	.095	.251	-.352
230	1425	-.039	.094	.291	-.380
230	1426	-.067	.093	.268	-.414
230	1427	-.035	.099	.275	-.352
230	1428	-.016	.085	.281	-.302
230	1429	-.028	.093	.316	-.319
230	1430	-.025	.088	.329	-.356
230	1431	-.029	.092	.328	-.348
230	1432	-.058	.090	.212	-.408
230	1433	-.048	.098	.282	-.439
230	1434	-.060	.099	.278	-.355
230	1435	-.064	.100	.273	-.397
230	1901	-.039	.096	.235	-.367
230	1902	.090	.098	.444	-.241
230	1903	.195	.108	.553	-.236
230	1904	.010	.108	.363	-.378
230	1905	.034	.105	.330	-.279
230	1906	-.030	.103	.266	-.357
230	1907	-.036	.113	.354	-.460
230	1908	-.038	.101	.351	-.397
230	1909	-.040	.104	.262	-.331
230	1910	-.039	.104	.292	-.368
230	1911	-.037	.118	.309	-.444
230	1912	-.035	.097	.346	-.492
230	1913	-.033	.096	.278	-.420
230	1914	-.036	.115	.403	-.368
230	1915	-.037	.105	.273	-.420
230	1916	-.038	.104	.336	-.406
230	1917	-.040	.106	.322	-.385
230	1918	-.041	.101	.328	-.390
230	1919	-.041	.118	.368	-.397
230	1920	-.036	.110	.238	-.401
230	1921	-.043	.108	.344	-.360
230	1922	-.042	.118	.390	-.468
230	1923	-.041	.109	.292	-.406
230	1924	-.048	.113	.373	-.381
230	1925	-.066	.108	.321	-.406
230	1926	-.053	.103	.300	-.378
230	1927	-.048	.114	.344	-.491
230	1928	-.038	.111	.350	-.421
230	1929	-.041	.109	.257	-.384
230	1930	-.044	.108	.273	-.365
230	1931	-.040	.113	.347	-.499
230	1932	-.025	.093	.326	-.331
230	1933	-.042	.107	.273	-.368
230	1934	-.041	.106	.296	-.376
230	1935	-.039	.120	.318	-.430
230	1936	-.039	.099	.353	-.498
230	1937	-.036	.098	.268	-.397
230	1938	-.034	.122	.461	-.390
230	1939	-.033	.106	.298	-.426
230	1940	-.027	.107	.379	-.434
230	1941	-.023	.106	.333	-.379
230	1942	-.026	.102	.360	-.366
230	1943	-.028	.114	.360	-.379
230	1944	-.029	.098	.240	-.362
230	1945	-.036	.110	.353	-.370
230	1946	-.010	.119	.424	-.442
230	1947	-.016	.112	.358	-.363
230	1948	-.017	.115	.403	-.370
230	1949	-.060	.108	.323	-.415
230	1950	-.042	.101	.317	-.365
230	1951	-.063	.116	.349	-.559
230	1952	-.027	.112	.363	-.469
230	1953	-.023	.111	.282	-.343
230	1954	-.024	.107	.277	-.373
230	1955	-.024	.113	.357	-.466
230	1956	-.027	.101	.357	-.497

WD	TAP	CPMEAN	CPRMS	CPMAX	CPMIN	WD	TAP	CPMEAN	CPRMS	CPMAX	CPMIN	WD	TAP	CPMEAN	CPRMS	CPMAX	CPMIN
230	1957	-.027	.109	.320	-.367	240	1213	-.053	.090	.307	-.431	240	1404	-.048	.093	.281	-.410
230	1958	-.028	.107	.309	-.359	240	1214	-.032	.106	.288	-.407	240	1405	-.049	.089	.227	-.328
230	1959	-.034	.119	.309	-.415	240	1215	-.038	.085	.238	-.369	240	1406	-.071	.103	.249	-.448
230	1960	-.031	.098	.347	-.476	240	1216	-.022	.096	.290	-.341	240	1407	-.042	.098	.284	-.422
230	1961	-.027	.097	.277	-.389	240	1217	-.035	.094	.231	-.350	240	1408	-.035	.091	.289	-.311
230	1962	-.006	.129	.437	-.344	240	1218	-.031	.091	.292	-.308	240	1409	-.035	.089	.380	-.317
230	1963	.002	.103	.315	-.362	240	1219	-.024	.089	.322	-.306	240	1410	-.031	.092	.304	-.317
230	1964	.007	.109	.439	-.386	240	1220	-.028	.090	.387	-.303	240	1411	-.037	.086	.252	-.362
230	1965	-.021	.103	.288	-.365	240	1221	-.022	.093	.319	-.308	240	1412	-.027	.095	.266	-.416
230	1966	-.025	.105	.349	-.401	240	1222	-.029	.086	.267	-.350	240	1413	-.047	.092	.264	-.320
230	1967	-.037	.118	.327	-.399	240	1223	-.027	.094	.279	-.399	240	1414	-.034	.087	.237	-.319
230	1968	-.035	.111	.243	-.410	240	1224	-.016	.090	.281	-.295	240	1415	-.031	.087	.280	-.284
240	1101	-.058	.115	.356	-.423	240	1225	-.022	.086	.237	-.300	240	1416	-.027	.092	.299	-.285
240	1102	-.075	.109	.333	-.462	240	1226	-.023	.087	.289	-.271	240	1417	-.030	.087	.240	-.317
240	1103	-.069	.096	.280	-.398	240	1227	-.025	.092	.304	-.300	240	1418	-.060	.108	.488	-.455
240	1104	-.046	.081	.232	-.355	240	1228	-.032	.091	.254	-.364	240	1419	-.041	.097	.250	-.380
240	1105	-.041	.087	.244	-.319	240	1229	-.027	.096	.237	-.331	240	1420	-.083	.117	.400	-.471
240	1106	-.060	.105	.327	-.445	240	1301	-.011	.107	.325	-.415	240	1421	-.041	.116	.345	-.445
240	1107	-.043	.091	.262	-.342	240	1302	.024	.109	.478	-.280	240	1422	-.053	.092	.311	-.436
240	1108	-.041	.093	.313	-.448	240	1303	.013	.113	.379	-.322	240	1423	-.036	.087	.274	-.364
240	1109	-.041	.099	.265	-.372	240	1304	-.006	.097	.328	-.328	240	1424	-.027	.096	.283	-.334
240	1110	-.044	.096	.274	-.395	240	1305	-.002	.100	.432	-.445	240	1425	-.028	.096	.241	-.352
240	1111	-.048	.094	.280	-.305	240	1306	.021	.104	.410	-.308	240	1426	-.041	.093	.285	-.340
240	1112	-.038	.088	.229	-.305	240	1307	.010	.097	.335	-.296	240	1427	-.021	.091	.333	-.299
240	1113	-.035	.093	.255	-.322	240	1308	-.028	.109	.375	-.490	240	1428	-.021	.089	.403	-.289
240	1114	-.034	.093	.265	-.374	240	1309	-.018	.091	.283	-.322	240	1429	-.022	.094	.316	-.309
240	1115	-.038	.091	.284	-.381	240	1311	.018	.101	.429	-.373	240	1430	-.022	.086	.273	-.351
240	1116	-.037	.088	.259	-.343	240	1312	.013	.097	.331	-.374	240	1431	-.017	.095	.277	-.386
240	1117	-.034	.088	.280	-.328	240	1313	.020	.095	.354	-.268	240	1432	-.041	.088	.259	-.309
240	1118	-.058	.106	.335	-.436	240	1314	.006	.086	.278	-.300	240	1433	-.039	.091	.242	-.348
240	1119	-.035	.095	.262	-.381	240	1315	-.033	.093	.263	-.354	240	1434	-.052	.092	.268	-.397
240	1120	-.035	.092	.258	-.340	240	1316	-.030	.097	.272	-.371	240	1435	-.051	.097	.285	-.329
240	1121	-.052	.099	.256	-.374	240	1317	-.004	.101	.341	-.353	240	1901	-.033	.092	.287	-.363
240	1122	-.053	.101	.258	-.408	240	1318	-.021	.100	.323	-.369	240	1902	.098	.118	.427	-.343
240	1123	-.045	.094	.306	-.391	240	1319	-.022	.094	.328	-.371	240	1903	.198	.102	.540	-.210
240	1124	-.036	.081	.258	-.357	240	1320	-.021	.082	.257	-.325	240	1904	.009	.104	.338	-.385
240	1125	-.033	.091	.252	-.330	240	1321	-.027	.090	.256	-.316	240	1905	.039	.109	.362	-.303
240	1126	-.032	.091	.344	-.334	240	1322	-.037	.093	.315	-.376	240	1906	-.025	.116	.298	-.379
240	1201	-.062	.118	.359	-.430	240	1323	-.037	.094	.282	-.361	240	1907	-.039	.096	.253	-.345
240	1202	-.077	.115	.314	-.500	240	1324	-.007	.095	.381	-.423	240	1908	-.036	.110	.336	-.432
240	1203	-.074	.110	.296	-.500	240	1325	-.003	.097	.302	-.324	240	1909	-.036	.109	.242	-.404
240	1204	-.054	.090	.214	-.377	240	1326	.000	.093	.329	-.286	240	1910	-.042	.119	.299	-.443
240	1205	-.093	.120	.307	-.529	240	1327	-.012	.094	.320	-.275	240	1911	-.031	.107	.285	-.372
240	1206	-.107	.121	.260	-.526	240	1328	-.027	.088	.273	-.312	240	1912	-.034	.108	.278	-.460
240	1207	-.062	.090	.236	-.380	240	1329	-.030	.093	.260	-.312	240	1913	-.034	.105	.264	-.358
240	1208	-.041	.091	.247	-.384	240	1330	-.016	.109	.317	-.470	240	1914	-.036	.108	.319	-.350
240	1209	-.042	.099	.259	-.384	240	1331	-.015	.109	.323	-.456	240	1915	-.039	.113	.314	-.369
240	1210	-.037	.094	.276	-.377	240	1401	-.064	.115	.302	-.398	240	1916	-.045	.124	.357	-.555
240	1211	-.084	.091	.191	-.409	240	1402	-.097	.091	.203	-.418	240	1917	-.040	.120	.286	-.459
240	1212	-.074	.088	.220	-.376	240	1403	-.091	.098	.281	-.483	240	1918	-.046	.111	.341	-.419

WD	TAP	CPMEAN	CPRMS	CPMAX	CPMIN	WD	TAP	CPMEAN	CPRMS	CPMAX	CPMIN	WD	TAP	CPMEAN	CPRMS	CPMAX	CPMIN
240	1919	-.040	.107	.307	-.406	250	1101	-.062	.121	.278	-.504	250	1225	-.040	.089	.246	-.348
240	1920	-.033	.110	.325	-.417	250	1102	-.080	.104	.259	-.551	250	1226	-.016	.095	.289	-.359
240	1921	-.037	.113	.383	-.416	250	1103	-.082	.105	.277	-.585	250	1227	-.037	.096	.311	-.386
240	1922	-.042	.120	.402	-.432	250	1104	-.048	.090	.344	-.335	250	1228	-.047	.098	.279	-.395
240	1923	-.040	.108	.310	-.467	250	1105	-.040	.093	.265	-.352	250	1229	-.016	.097	.328	-.348
240	1924	-.043	.112	.347	-.355	250	1106	-.064	.097	.247	-.453	250	1301	-.031	.111	.307	-.503
240	1925	-.069	.125	.300	-.569	250	1107	-.045	.092	.274	-.368	250	1302	-.007	.117	.390	-.512
240	1926	-.054	.123	.295	-.503	250	1108	-.049	.100	.433	-.483	250	1303	-.008	.122	.380	-.532
240	1927	-.052	.109	.297	-.512	250	1109	-.051	.096	.261	-.394	250	1304	-.000	.104	.314	-.367
240	1928	-.046	.109	.302	-.475	250	1110	-.045	.096	.229	-.332	250	1305	-.014	.108	.452	-.433
240	1929	-.044	.113	.316	-.404	250	1111	-.041	.094	.297	-.344	250	1306	.005	.104	.351	-.404
240	1930	-.046	.118	.277	-.441	250	1112	-.042	.097	.317	-.408	250	1307	.003	.105	.352	-.318
240	1931	-.051	.096	.232	-.359	250	1113	-.035	.086	.276	-.300	250	1308	-.012	.105	.389	-.375
240	1932	-.030	.102	.306	-.355	250	1114	-.037	.083	.251	-.323	250	1309	-.019	.101	.323	-.398
240	1933	-.047	.111	.250	-.412	250	1115	-.054	.101	.268	-.393	250	1311	.002	.090	.338	-.276
240	1934	-.048	.119	.308	-.435	250	1116	-.050	.088	.206	-.385	250	1312	.000	.106	.325	-.331
240	1935	-.039	.110	.279	-.388	250	1117	-.038	.101	.256	-.393	250	1313	.018	.095	.328	-.302
240	1936	-.046	.109	.266	-.477	250	1118	-.061	.098	.257	-.491	250	1314	.012	.102	.329	-.351
240	1937	-.047	.106	.248	-.399	250	1119	-.034	.094	.242	-.338	250	1315	-.046	.091	.259	-.352
240	1938	-.043	.118	.345	-.425	250	1120	-.036	.099	.318	-.379	250	1316	-.036	.093	.233	-.329
240	1939	-.040	.115	.316	-.381	250	1121	-.056	.090	.259	-.362	250	1317	-.011	.102	.326	-.354
240	1940	-.031	.126	.387	-.524	250	1122	-.051	.092	.277	-.357	250	1318	-.027	.092	.290	-.343
240	1941	-.030	.122	.326	-.469	250	1123	-.045	.096	.265	-.351	250	1319	-.023	.098	.302	-.412
240	1942	-.028	.113	.350	-.391	250	1124	-.037	.090	.358	-.341	250	1320	-.010	.090	.379	-.307
240	1943	-.028	.101	.277	-.360	250	1125	-.033	.095	.291	-.364	250	1321	-.026	.094	.272	-.385
240	1944	-.030	.098	.287	-.333	250	1126	-.039	.088	.220	-.325	250	1322	-.048	.091	.229	-.382
240	1945	-.033	.114	.399	-.428	250	1201	-.060	.122	.305	-.403	250	1323	-.044	.094	.250	-.379
240	1946	-.013	.124	.436	-.412	250	1202	-.084	.111	.278	-.458	250	1324	-.006	.099	.443	-.382
240	1947	-.010	.110	.332	-.438	250	1203	-.071	.105	.284	-.405	250	1325	-.009	.097	.331	-.356
240	1948	-.016	.114	.405	-.344	250	1204	-.066	.093	.205	-.508	250	1326	-.005	.099	.290	-.308
240	1949	-.057	.124	.296	-.531	250	1205	-.093	.117	.286	-.509	250	1327	-.007	.095	.282	-.324
240	1950	-.038	.122	.331	-.462	250	1206	-.106	.116	.271	-.521	250	1328	-.032	.098	.249	-.388
240	1951	-.063	.108	.291	-.514	250	1207	-.066	.102	.252	-.430	250	1329	-.034	.086	.243	-.351
240	1952	-.036	.110	.401	-.427	250	1208	-.061	.099	.245	-.423	250	1330	-.025	.117	.309	-.416
240	1953	-.014	.114	.297	-.360	250	1209	-.031	.102	.321	-.382	250	1331	-.036	.121	.301	-.530
240	1954	-.017	.120	.314	-.414	250	1210	-.035	.097	.259	-.404	250	1401	-.049	.119	.384	-.441
240	1955	-.023	.101	.307	-.339	250	1211	-.110	.090	.193	-.445	250	1402	-.107	.104	.243	-.498
240	1956	-.031	.110	.354	-.375	250	1212	-.083	.098	.212	-.367	250	1403	-.071	.102	.289	-.418
240	1957	-.017	.113	.310	-.368	250	1213	-.061	.089	.201	-.341	250	1404	-.027	.100	.402	-.379
240	1958	-.023	.120	.291	-.399	250	1214	-.041	.114	.311	-.459	250	1405	-.065	.098	.206	-.534
240	1959	-.027	.106	.259	-.385	250	1215	-.051	.088	.252	-.435	250	1406	-.043	.109	.457	-.468
240	1960	-.030	.109	.278	-.460	250	1216	-.035	.085	.238	-.359	250	1407	-.036	.101	.349	-.395
240	1961	-.038	.105	.265	-.370	250	1217	-.039	.094	.303	-.406	250	1408	-.040	.098	.332	-.379
240	1962	.013	.117	.394	-.327	250	1218	-.046	.088	.228	-.376	250	1409	-.034	.091	.259	-.374
240	1963	.016	.121	.438	-.368	250	1219	-.040	.094	.266	-.351	250	1410	-.051	.089	.248	-.390
240	1964	.027	.130	.420	-.493	250	1220	-.030	.091	.258	-.389	250	1411	-.028	.101	.337	-.377
240	1965	-.008	.123	.425	-.456	250	1221	-.049	.089	.265	-.383	250	1412	-.028	.100	.373	-.369
240	1966	-.014	.115	.377	-.360	250	1222	-.023	.098	.348	-.333	250	1413	-.039	.107	.395	-.406
240	1967	-.040	.108	.309	-.409	250	1223	-.033	.097	.269	-.330	250	1414	-.044	.090	.224	-.320
240	1968	-.033	.111	.327	-.438	250	1224	-.023	.095	.298	-.376	250	1415	-.023	.094	.272	-.382

WD	TAP	CPMEAN	CPRMS	CPMAX	CPMIN
250	1416	-.037	.097	.322	-.379
250	1417	-.037	.093	.308	-.364
250	1418	-.029	.121	.545	-.425
250	1419	-.032	.100	.350	-.351
250	1420	-.027	.127	.536	-.419
250	1421	-.035	.110	.343	-.417
250	1422	-.057	.091	.246	-.350
250	1423	-.034	.092	.265	-.356
250	1424	-.026	.088	.267	-.413
250	1425	-.018	.100	.428	-.442
250	1426	-.042	.093	.293	-.359
250	1427	-.035	.096	.305	-.337
250	1428	-.021	.094	.265	-.366
250	1429	-.029	.092	.278	-.374
250	1430	-.002	.104	.400	-.370
250	1431	-.011	.099	.315	-.343
250	1432	-.038	.099	.355	-.383
250	1433	-.028	.103	.327	-.368
250	1434	-.012	.105	.419	-.334
250	1435	-.041	.104	.345	-.386
250	1901	-.035	.097	.236	-.384
250	1902	.081	.100	.385	-.226
250	1903	.192	.091	.501	-.179
250	1904	.007	.106	.306	-.315
250	1905	.027	.113	.386	-.332
250	1906	-.035	.102	.295	-.481
250	1907	-.034	.099	.309	-.299
250	1908	-.046	.101	.258	-.387
250	1909	-.042	.108	.276	-.383
250	1910	-.043	.110	.295	-.441
250	1911	-.044	.106	.301	-.463
250	1912	-.041	.122	.309	-.441
250	1913	-.040	.126	.347	-.436
250	1914	-.047	.119	.316	-.411
250	1915	-.047	.133	.341	-.643
250	1916	-.050	.108	.361	-.364
250	1917	-.050	.104	.264	-.415
250	1918	-.049	.118	.371	-.554
250	1919	-.048	.111	.280	-.441
250	1920	-.036	.125	.449	-.475
250	1921	-.055	.123	.298	-.467
250	1922	-.048	.123	.331	-.420
250	1923	-.046	.114	.259	-.489
250	1924	-.049	.114	.385	-.403
250	1925	-.074	.126	.445	-.452
250	1926	-.061	.106	.264	-.395
250	1927	-.057	.102	.280	-.556
250	1928	-.056	.110	.258	-.366
250	1929	-.054	.116	.334	-.391
250	1930	-.056	.104	.291	-.578
250	1931	-.049	.099	.293	-.319
250	1932	-.038	.093	.236	-.350
250	1933	-.073	.123	.274	-.654
250	1934	-.064	.116	.312	-.486
250	1935	-.052	.108	.298	-.482
250	1936	-.052	.124	.315	-.453
250	1937	-.056	.126	.323	-.445
250	1938	-.050	.123	.307	-.390
250	1939	-.039	.133	.372	-.623
250	1940	-.049	.117	.361	-.719
250	1941	-.048	.111	.317	-.486
250	1942	-.036	.120	.378	-.496
250	1943	-.039	.109	.307	-.395
250	1944	-.036	.115	.347	-.414
250	1945	-.048	.122	.305	-.453
250	1946	-.027	.127	.358	-.434
250	1947	-.028	.113	.299	-.428
250	1948	-.024	.115	.431	-.393
250	1949	-.066	.125	.425	-.449
250	1950	-.050	.105	.275	-.384
250	1951	-.062	.106	.299	-.653
250	1952	-.048	.109	.267	-.353
250	1953	-.036	.117	.316	-.410
250	1954	-.029	.105	.305	-.525
250	1955	-.015	.103	.307	-.317
250	1956	-.047	.103	.261	-.380
250	1957	-.024	.113	.303	-.378
250	1958	-.027	.112	.354	-.457
250	1959	-.039	.107	.305	-.405
250	1960	-.037	.122	.315	-.465
250	1961	-.051	.124	.344	-.443
250	1962	-.005	.129	.387	-.402
250	1963	.004	.132	.439	-.526
250	1964	.011	.112	.370	-.320
250	1965	-.017	.112	.359	-.395
250	1966	-.022	.121	.376	-.501
250	1967	-.055	.115	.296	-.422
250	1968	-.044	.126	.458	-.466
260	1101	-.117	.118	.267	-.597
260	1102	-.125	.114	.284	-.612
260	1103	-.127	.113	.194	-.634
260	1104	-.067	.100	.265	-.366
260	1105	-.052	.105	.280	-.547
260	1106	-.083	.102	.260	-.451
260	1107	-.064	.101	.237	-.449
260	1108	-.080	.096	.283	-.424
260	1109	-.092	.102	.238	-.494
260	1110	-.053	.097	.296	-.358
260	1111	-.052	.101	.302	-.360
260	1112	-.059	.105	.339	-.422
260	1113	-.050	.101	.238	-.401
260	1114	-.073	.097	.227	-.392
260	1115	-.076	.110	.339	-.459
260	1116	-.079	.091	.210	-.416
260	1117	-.048	.097	.278	-.394
260	1118	-.064	.099	.273	-.350
260	1119	-.050	.093	.299	-.350
260	1120	-.052	.095	.272	-.365
260	1121	-.062	.096	.226	-.406
260	1122	-.057	.099	.230	-.392
260	1123	-.054	.087	.221	-.311
260	1124	-.057	.100	.269	-.384
260	1125	-.045	.107	.312	-.428
260	1126	-.063	.109	.323	-.444
260	1201	-.102	.120	.267	-.574
260	1202	-.103	.116	.344	-.480
260	1203	-.080	.112	.326	-.424
260	1204	-.097	.092	.193	-.432
260	1205	-.128	.120	.283	-.556
260	1206	-.129	.118	.267	-.531
260	1207	-.096	.105	.261	-.474
260	1208	-.063	.089	.211	-.333
260	1209	-.064	.100	.261	-.394
260	1210	-.056	.096	.253	-.360
260	1211	-.130	.092	.185	-.429
260	1212	-.093	.089	.209	-.451
260	1213	-.083	.093	.239	-.453
260	1214	-.100	.116	.249	-.530
260	1215	-.074	.093	.259	-.373
260	1216	-.060	.094	.232	-.393
260	1217	-.053	.094	.239	-.345
260	1218	-.053	.093	.240	-.334
260	1219	-.050	.089	.248	-.313
260	1220	-.052	.094	.267	-.395
260	1221	-.056	.099	.272	-.419
260	1222	-.047	.098	.246	-.400
260	1223	-.052	.093	.280	-.393
260	1224	-.028	.093	.293	-.382
260	1225	-.049	.097	.320	-.358
260	1226	-.050	.090	.238	-.427
260	1227	-.045	.094	.274	-.344
260	1228	-.046	.092	.241	-.331
260	1229	-.047	.099	.253	-.348
260	1301	-.052	.115	.344	-.401
260	1302	-.061	.124	.343	-.568
260	1303	-.070	.133	.335	-.630
260	1304	-.044	.108	.280	-.441
260	1305	-.069	.095	.283	-.444
260	1306	-.038	.099	.304	-.333
260	1307	-.018	.104	.330	-.327

WD	TAP	CPMEAN	CPRMS	CPMAX	CPMIN
260	1308	-.049	.105	.353	-.515
260	1309	-.046	.108	.287	-.409
260	1311	-.054	.103	.251	-.412
260	1312	-.022	.109	.401	-.392
260	1313	.004	.096	.407	-.285
260	1314	-.027	.100	.304	-.360
260	1315	-.064	.094	.226	-.407
260	1316	-.061	.093	.256	-.349
260	1317	-.065	.098	.274	-.418
260	1318	-.068	.101	.234	-.405
260	1319	-.041	.088	.236	-.353
260	1320	-.049	.100	.277	-.387
260	1321	-.037	.105	.277	-.422
260	1322	-.063	.106	.346	-.443
260	1323	-.057	.100	.269	-.443
260	1324	-.025	.096	.332	-.355
260	1325	-.041	.092	.268	-.342
260	1326	-.026	.099	.332	-.305
260	1327	-.036	.102	.319	-.325
260	1328	-.051	.104	.308	-.376
260	1329	-.053	.098	.204	-.413
260	1330	-.064	.115	.320	-.594
260	1331	-.112	.126	.267	-.716
260	1401	-.045	.126	.440	-.534
260	1402	-.175	.115	.134	-.744
260	1403	-.033	.124	.524	-.499
260	1404	-.005	.128	.545	-.478
260	1405	-.131	.128	.234	-.704
260	1406	.010	.123	.486	-.385
260	1407	-.012	.122	.548	-.420
260	1408	.010	.116	.412	-.363
260	1409	-.043	.103	.314	-.385
260	1410	-.052	.100	.292	-.396
260	1411	-.034	.106	.388	-.416
260	1412	.023	.115	.475	-.380
260	1413	.046	.127	.515	-.313
260	1414	-.040	.102	.363	-.345
260	1415	-.048	.093	.239	-.428
260	1416	-.017	.104	.335	-.441
260	1417	.012	.103	.430	-.296
260	1418	.038	.139	.736	-.452
260	1419	-.004	.107	.433	-.483
260	1420	.045	.141	.793	-.495
260	1421	.002	.129	.497	-.463
260	1422	-.067	.098	.303	-.454
260	1423	-.017	.105	.356	-.504
260	1424	.004	.111	.388	-.359
260	1425	.024	.117	.593	-.378
260	1426	.020	.127	.544	-.344
260	1427	-.044	.095	.268	-.344
260	1428	-.028	.101	.296	-.351
260	1429	.006	.112	.501	-.391
260	1430	.013	.115	.424	-.372
260	1431	.045	.116	.507	-.351
260	1432	.002	.109	.401	-.341
260	1433	.013	.114	.434	-.363
260	1434	.028	.128	.588	-.481
260	1435	-.031	.129	.427	-.811
260	1901	-.078	.101	.269	-.448
260	1902	.056	.095	.413	-.470
260	1903	.169	.084	.451	-.096
260	1904	-.016	.102	.376	-.414
260	1905	-.008	.096	.320	-.436
260	1906	-.062	.094	.227	-.384
260	1907	-.042	.099	.326	-.363
260	1908	-.049	.112	.403	-.401
260	1909	-.065	.104	.313	-.387
260	1910	-.059	.097	.285	-.342
260	1911	-.083	.096	.202	-.462
260	1912	-.074	.099	.307	-.428
260	1913	-.051	.099	.309	-.444
260	1914	-.099	.101	.210	-.457
260	1915	-.091	.104	.218	-.459
260	1916	-.051	.100	.318	-.432
260	1917	-.057	.095	.293	-.385
260	1918	-.071	.097	.272	-.392
260	1919	-.070	.104	.270	-.476
260	1920	-.063	.101	.307	-.382
260	1921	-.126	.126	.251	-.703
260	1922	-.087	.123	.339	-.528
260	1923	-.069	.111	.253	-.395
260	1924	-.057	.117	.339	-.448
260	1925	-.081	.103	.249	-.416
260	1926	-.065	.093	.272	-.397
260	1927	-.107	.103	.215	-.447
260	1928	-.090	.108	.238	-.542
260	1929	-.081	.099	.293	-.392
260	1930	-.072	.094	.239	-.421
260	1931	-.069	.088	.222	-.382
260	1932	-.052	.099	.381	-.355
260	1933	-.155	.135	.367	-.838
260	1934	-.106	.114	.262	-.719
260	1935	-.093	.099	.218	-.430
260	1936	-.084	.101	.265	-.422
260	1937	-.081	.098	.288	-.488
260	1938	-.072	.101	.254	-.355
260	1939	-.065	.097	.244	-.430
260	1940	-.122	.141	.281	-.793
260	1941	-.077	.100	.318	-.459
260	1942	-.068	.100	.259	-.372
260	1943	-.065	.098	.246	-.411
260	1944	-.064	.089	.233	-.332
260	1945	-.089	.120	.347	-.556
260	1946	-.062	.119	.360	-.537
260	1947	-.048	.112	.331	-.387
260	1948	-.043	.116	.321	-.421
260	1949	-.080	.102	.241	-.430
260	1950	-.068	.092	.280	-.386
260	1951	-.138	.140	.245	-1.032
260	1952	-.083	.103	.217	-.443
260	1953	-.064	.097	.261	-.354
260	1954	-.060	.094	.296	-.446
260	1955	-.051	.094	.256	-.374
260	1956	-.069	.110	.424	-.415
260	1957	-.057	.110	.360	-.508
260	1958	-.052	.100	.307	-.618
260	1959	-.079	.095	.233	-.402
260	1960	-.069	.097	.270	-.383
260	1961	-.077	.094	.304	-.457
260	1962	-.075	.109	.301	-.476
260	1963	-.040	.102	.304	-.425
260	1964	.006	.105	.391	-.364
260	1965	-.043	.099	.334	-.370
260	1966	-.055	.101	.257	-.364
260	1967	-.096	.110	.278	-.500
260	1968	-.080	.105	.277	-.419
270	1101	-.111	.094	.198	-.521
270	1102	-.144	.121	.261	-.626
270	1103	-.033	.129	.402	-.400
270	1104	-.029	.133	.404	-.354
270	1105	-.032	.130	.405	-.442
270	1106	-.099	.107	.233	-.467
270	1107	-.070	.100	.296	-.404
270	1108	-.091	.100	.200	-.420
270	1109	-.108	.110	.261	-.523
270	1110	-.060	.090	.225	-.341
270	1111	-.063	.100	.285	-.391
270	1112	-.074	.099	.200	-.432
270	1113	-.058	.097	.429	-.370
270	1114	-.086	.099	.232	-.449
270	1115	-.090	.105	.262	-.447
270	1116	-.087	.107	.346	-.513
270	1117	-.060	.096	.275	-.349
270	1118	-.080	.104	.249	-.447
270	1119	-.062	.093	.217	-.412
270	1120	-.067	.098	.224	-.392
270	1121	-.075	.094	.240	-.362
270	1122	-.065	.097	.268	-.364
270	1123	.017	.133	.448	-.361
270	1124	.016	.134	.452	-.341

WD	TAP	CPMEAN	CPRMS	CPMAX	CPMIN
270	1125	.017	.135	.452	-.388
270	1126	-.073	.103	.350	-.540
270	1201	-.101	.099	.203	-.470
270	1202	-.120	.111	.250	-.581
270	1203	-.095	.107	.273	-.501
270	1204	-.106	.107	.368	-.524
270	1205	-.154	.116	.241	-.559
270	1206	-.150	.116	.250	-.558
270	1207	-.114	.112	.265	-.785
270	1208	-.071	.089	.198	-.381
270	1209	-.071	.094	.262	-.340
270	1210	-.062	.093	.229	-.394
270	1211	-.138	.091	.171	-.454
270	1212	-.100	.091	.202	-.420
270	1213	-.082	.095	.225	-.395
270	1214	-.114	.134	.283	-.612
270	1215	-.085	.090	.207	-.332
270	1216	-.066	.090	.241	-.399
270	1217	-.055	.091	.227	-.357
270	1218	-.054	.086	.228	-.298
270	1219	-.054	.092	.194	-.432
270	1220	-.057	.092	.286	-.351
270	1221	-.064	.093	.216	-.385
270	1222	-.056	.101	.279	-.385
270	1223	-.056	.084	.232	-.341
270	1224	-.023	.093	.285	-.365
270	1225	-.057	.100	.252	-.406
270	1226	-.048	.088	.297	-.409
270	1227	-.045	.090	.282	-.363
270	1228	-.054	.089	.208	-.345
270	1229	-.049	.095	.255	-.351
270	1301	-.051	.100	.336	-.356
270	1302	-.049	.142	.405	-.666
270	1303	-.062	.147	.359	-.669
270	1304	-.042	.104	.363	-.416
270	1305	-.065	.105	.356	-.409
270	1306	-.039	.108	.395	-.340
270	1307	-.016	.097	.364	-.330
270	1308	-.045	.116	.339	-.409
270	1309	-.052	.103	.258	-.399
270	1311	-.056	.103	.301	-.433
270	1312	-.020	.111	.445	-.404
270	1313	.010	.117	.452	-.343
270	1314	-.025	.100	.363	-.312
270	1315	-.081	.101	.213	-.459
270	1316	-.069	.092	.232	-.419
270	1317	-.073	.108	.277	-.503
270	1318	-.063	.096	.349	-.350
270	1319	-.004	.134	.428	-.373
270	1320	-.008	.129	.429	-.450
270	1321	-.004	.134	.431	-.400
270	1322	-.073	.096	.260	-.381
270	1323	-.063	.098	.294	-.407
270	1324	-.021	.105	.394	-.383
270	1325	-.047	.101	.273	-.365
270	1326	-.020	.091	.333	-.309
270	1327	-.031	.101	.349	-.326
270	1328	-.058	.100	.223	-.420
270	1329	-.057	.093	.197	-.379
270	1330	-.063	.107	.272	-.489
270	1331	-.111	.121	.277	-.819
270	1401	-.058	.113	.348	-.587
270	1402	-.169	.107	.160	-.668
270	1403	-.027	.125	.461	-.417
270	1404	.005	.125	.569	-.409
270	1405	-.143	.132	.193	-1.013
270	1406	.001	.122	.445	-.422
270	1407	.002	.113	.455	-.331
270	1408	.009	.119	.410	-.407
270	1409	-.044	.099	.442	-.407
270	1410	-.057	.095	.238	-.414
270	1411	-.032	.109	.392	-.468
270	1412	.011	.106	.469	-.309
270	1413	.049	.141	.701	-.370
270	1414	-.043	.103	.266	-.414
270	1415	-.042	.092	.328	-.411
270	1416	-.010	.098	.314	-.367
270	1417	.009	.101	.349	-.350
270	1418	.027	.136	.563	-.375
270	1419	-.009	.111	.428	-.357
270	1420	.035	.138	.565	-.393
270	1421	-.003	.129	.536	-.410
270	1422	-.062	.099	.273	-.417
270	1423	-.017	.106	.389	-.348
270	1424	.008	.108	.436	-.409
270	1425	.026	.117	.416	-.332
270	1426	.009	.122	.524	-.301
270	1427	-.041	.098	.270	-.400
270	1428	-.033	.095	.392	-.376
270	1429	-.006	.102	.331	-.325
270	1430	.024	.120	.517	-.444
270	1431	.032	.110	.563	-.298
270	1432	.012	.115	.532	-.340
270	1433	.015	.119	.512	-.378
270	1434	.018	.139	.623	-1.068
270	1435	-.024	.126	.412	-.757
270	1901	-.075	.098	.230	-.473
270	1902	.047	.093	.393	-.419
270	1903	.153	.086	.404	-.122
270	1904	-.022	.101	.379	-.357
270	1905	-.010	.086	.312	-.427
270	1906	-.065	.103	.224	-.486
270	1907	-.040	.100	.378	-.400
270	1908	-.055	.098	.395	-.334
270	1909	-.074	.094	.295	-.386
270	1910	-.066	.095	.222	-.380
270	1911	-.082	.103	.255	-.438
270	1912	-.079	.100	.227	-.379
270	1913	-.054	.111	.401	-.388
270	1914	-.097	.096	.228	-.385
270	1915	-.093	.101	.216	-.432
270	1916	-.067	.106	.368	-.405
270	1917	-.069	.094	.339	-.531
270	1918	-.069	.097	.261	-.355
270	1919	-.069	.096	.202	-.481
270	1920	-.061	.093	.235	-.376
270	1921	-.116	.098	.214	-.500
270	1922	-.089	.100	.202	-.452
270	1923	-.080	.096	.242	-.441
270	1924	-.077	.099	.245	-.447
270	1925	-.092	.097	.211	-.424
270	1926	-.077	.092	.283	-.357
270	1927	-.109	.100	.184	-.448
270	1928	-.093	.105	.243	-.434
270	1929	-.091	.089	.225	-.503
270	1930	-.080	.105	.229	-.479
270	1931	-.067	.092	.211	-.369
270	1932	-.054	.087	.311	-.351
270	1933	-.152	.125	.275	-.778
270	1934	-.108	.106	.264	-.615
270	1935	-.097	.108	.242	-.478
270	1936	-.089	.103	.237	-.387
270	1937	-.081	.108	.305	-.426
270	1938	-.077	.098	.245	-.377
270	1939	-.068	.094	.203	-.358
270	1940	-.100	.135	.336	-.833
270	1941	-.085	.097	.239	-.523
270	1942	-.067	.098	.283	-.423
270	1943	-.065	.090	.181	-.487
270	1944	-.062	.080	.200	-.319
270	1945	-.089	.093	.222	-.404
270	1946	-.064	.102	.237	-.424
270	1947	-.058	.096	.297	-.360
270	1948	-.062	.097	.228	-.420
270	1949	-.089	.097	.212	-.431
270	1950	-.078	.092	.297	-.378
270	1951	-.130	.124	.154	-.775
270	1952	-.085	.103	.243	-.551
270	1953	-.074	.095	.298	-.428
270	1954	-.068	.106	.254	-.465

WD	TAP	CPMEAN	CPRMS	CPMAX	CPMIN	WD	TAP	CPMEAN	CPRMS	CPMAX	CPMIN	WD	TAP	CPMEAN	CPRMS	CPMAX	CPMIN
270	1955	-.050	.095	.243	-.356	280	1211	-.118	.090	.171	-.441	280	1402	-.130	.096	.295	-.768
270	1956	-.070	.096	.345	-.417	280	1212	-.077	.087	.236	-.341	280	1403	-.019	.120	.396	-.389
270	1957	-.070	.102	.401	-.393	280	1213	-.071	.092	.222	-.408	280	1404	.032	.123	.600	-.406
270	1958	-.060	.097	.243	-.359	280	1214	-.093	.125	.320	-.493	280	1405	-.109	.112	.240	-.659
270	1959	-.084	.101	.206	-.443	280	1215	-.071	.096	.272	-.394	280	1406	-.006	.111	.374	-.368
270	1960	-.075	.098	.234	-.392	280	1216	-.059	.101	.239	-.478	280	1407	.021	.118	.514	-.425
270	1961	-.077	.107	.293	-.511	280	1217	-.046	.088	.279	-.359	280	1408	.005	.109	.480	-.327
270	1962	-.067	.104	.270	-.445	280	1218	-.047	.097	.285	-.445	280	1409	-.034	.096	.296	-.318
270	1963	-.030	.099	.267	-.378	280	1219	-.045	.095	.274	-.322	280	1410	-.048	.102	.287	-.411
270	1964	.004	.108	.337	-.378	280	1220	-.047	.092	.282	-.359	280	1411	-.037	.090	.214	-.340
270	1965	-.051	.096	.323	-.496	280	1221	-.055	.102	.295	-.416	280	1412	.002	.104	.418	-.376
270	1966	-.057	.099	.236	-.367	280	1222	-.043	.085	.234	-.314	280	1413	.017	.118	.514	-.382
270	1967	-.100	.102	.215	-.561	280	1223	-.044	.092	.214	-.329	280	1414	-.044	.092	.254	-.332
270	1968	-.080	.099	.237	-.446	280	1224	-.013	.091	.334	-.340	280	1415	-.036	.096	.352	-.330
280	1101	-.092	.103	.220	-.440	280	1225	-.055	.091	.228	-.337	280	1416	-.023	.101	.317	-.318
280	1102	-.115	.111	.225	-.613	280	1226	-.040	.094	.356	-.316	280	1417	-.002	.097	.358	-.297
280	1103	-.119	.104	.221	-.609	280	1227	-.039	.101	.274	-.341	280	1418	-.009	.125	.490	-.404
280	1104	-.068	.099	.226	-.368	280	1228	-.042	.096	.282	-.359	280	1419	-.025	.111	.378	-.423
280	1105	-.065	.091	.252	-.353	280	1229	-.045	.096	.287	-.362	280	1420	-.007	.130	.473	-.460
280	1106	-.083	.106	.260	-.560	280	1301	-.033	.114	.392	-.376	280	1421	-.003	.125	.425	-.426
280	1107	-.069	.103	.267	-.395	280	1302	-.036	.128	.472	-.461	280	1422	-.058	.096	.252	-.388
280	1108	-.073	.104	.218	-.441	280	1303	-.034	.135	.547	-.541	280	1423	-.021	.100	.327	-.375
280	1109	-.082	.099	.265	-.409	280	1304	-.029	.106	.294	-.351	280	1424	-.007	.108	.353	-.434
280	1110	-.049	.100	.254	-.373	280	1305	-.045	.111	.503	-.391	280	1425	.003	.098	.332	-.375
280	1111	-.051	.100	.260	-.358	280	1306	-.017	.106	.418	-.333	280	1426	-.001	.115	.446	-.396
280	1112	-.061	.105	.259	-.433	280	1307	-.007	.107	.391	-.328	280	1427	-.034	.099	.292	-.334
280	1113	-.051	.098	.247	-.369	280	1308	-.024	.118	.345	-.507	280	1428	-.027	.096	.319	-.328
280	1114	-.067	.099	.270	-.453	280	1309	-.036	.106	.286	-.429	280	1429	-.010	.107	.341	-.390
280	1115	-.075	.101	.277	-.409	280	1311	-.028	.108	.459	-.350	280	1430	.005	.093	.313	-.304
280	1116	-.076	.102	.247	-.469	280	1312	-.004	.107	.510	-.358	280	1431	.018	.105	.399	-.360
280	1117	-.049	.104	.308	-.435	280	1313	.011	.110	.363	-.434	280	1432	-.016	.099	.367	-.348
280	1118	-.065	.104	.262	-.563	280	1314	-.010	.103	.310	-.393	280	1433	-.002	.107	.362	-.341
280	1119	-.050	.103	.264	-.405	280	1315	-.070	.098	.246	-.449	280	1434	.001	.113	.405	-.423
280	1120	-.051	.101	.233	-.373	280	1316	-.061	.102	.274	-.406	280	1435	-.013	.110	.387	-.422
280	1121	-.070	.093	.218	-.338	280	1317	-.042	.106	.281	-.452	280	1901	-.066	.088	.245	-.392
280	1122	-.061	.095	.241	-.355	280	1318	-.046	.095	.261	-.349	280	1902	.066	.099	.360	-.259
280	1123	-.057	.092	.274	-.370	280	1319	-.028	.095	.340	-.321	280	1903	.166	.087	.428	-.140
280	1124	-.051	.099	.246	-.358	280	1320	-.018	.105	.314	-.350	280	1904	-.012	.101	.375	-.377
280	1125	-.052	.094	.289	-.409	280	1321	-.037	.091	.278	-.337	280	1905	.010	.094	.288	-.526
280	1126	-.058	.099	.266	-.333	280	1322	-.063	.094	.304	-.364	280	1906	-.051	.091	.315	-.385
280	1201	-.092	.100	.193	-.473	280	1323	-.057	.102	.279	-.388	280	1907	-.043	.096	.313	-.358
280	1202	-.113	.116	.343	-.484	280	1324	-.006	.108	.413	-.352	280	1908	-.047	.101	.292	-.411
280	1203	-.096	.113	.357	-.459	280	1325	-.024	.097	.301	-.349	280	1909	-.062	.102	.280	-.496
280	1204	-.096	.102	.194	-.507	280	1326	-.010	.103	.330	-.334	280	1910	-.061	.096	.228	-.375
280	1205	-.164	.125	.327	-.629	280	1327	-.013	.102	.327	-.337	280	1911	-.067	.098	.220	-.427
280	1206	-.163	.124	.346	-.652	280	1328	-.042	.104	.312	-.400	280	1912	-.064	.101	.349	-.432
280	1207	-.098	.109	.242	-.470	280	1329	-.055	.098	.261	-.391	280	1913	-.044	.099	.262	-.375
280	1208	-.060	.097	.273	-.352	280	1330	-.043	.114	.319	-.446	280	1914	-.079	.106	.260	-.518
280	1209	-.072	.096	.256	-.387	280	1331	-.073	.116	.302	-.463	280	1915	-.078	.108	.307	-.423
280	1210	-.058	.086	.248	-.309	280	1401	-.037	.101	.298	-.380	280	1916	-.057	.101	.376	-.428

WD	TAP	CPMEAN	CPRMS	CPMAX	CPMIN
280	1917	-.060	.097	.268	-.382
280	1918	-.067	.112	.315	-.407
280	1919	-.069	.111	.267	-.420
280	1920	-.059	.091	.257	-.380
280	1921	-.098	.107	.235	-.570
280	1922	-.076	.101	.235	-.576
280	1923	-.072	.113	.291	-.435
280	1924	-.065	.089	.214	-.427
280	1925	-.088	.094	.302	-.446
280	1926	-.064	.100	.253	-.420
280	1927	-.097	.096	.196	-.431
280	1928	-.082	.103	.258	-.487
280	1929	-.071	.101	.224	-.459
280	1930	-.071	.096	.234	-.410
280	1931	-.066	.090	.247	-.362
280	1932	-.045	.088	.234	-.332
280	1933	-.124	.118	.211	-1.022
280	1934	-.095	.104	.273	-.431
280	1935	-.079	.102	.214	-.456
280	1936	-.074	.103	.362	-.444
280	1937	-.069	.098	.240	-.396
280	1938	-.065	.112	.302	-.496
280	1939	-.058	.105	.271	-.376
280	1940	-.078	.117	.304	-.511
280	1941	-.071	.099	.297	-.436
280	1942	-.060	.112	.291	-.420
280	1943	-.061	.105	.252	-.370
280	1944	-.059	.078	.174	-.305
280	1945	-.073	.103	.239	-.431
280	1946	-.056	.102	.239	-.449
280	1947	-.050	.113	.386	-.423
280	1948	-.046	.092	.260	-.376
280	1949	-.084	.092	.296	-.450
280	1950	-.067	.100	.251	-.418
280	1951	-.111	.104	.188	-.589
280	1952	-.087	.108	.248	-.614
280	1953	-.065	.105	.282	-.442
280	1954	-.062	.096	.275	-.414
280	1955	-.043	.093	.369	-.340
280	1956	-.061	.097	.249	-.351
280	1957	-.063	.108	.262	-.523
280	1958	-.053	.098	.249	-.398
280	1959	-.071	.097	.241	-.455
280	1960	-.062	.101	.340	-.406
280	1961	-.068	.097	.225	-.401
280	1962	-.040	.117	.330	-.518
280	1963	-.007	.109	.572	-.322
280	1964	.011	.106	.384	-.342
280	1965	-.041	.100	.350	-.414
280	1966	-.057	.114	.337	-.414
280	1967	-.102	.114	.251	-.479
280	1968	-.082	.094	.219	-.372
290	1101	-.109	.105	.232	-.483
290	1102	-.141	.120	.239	-.536
290	1103	-.134	.107	.182	-.656
290	1104	-.078	.092	.283	-.381
290	1105	-.066	.091	.283	-.375
290	1106	-.105	.119	.269	-.623
290	1107	-.047	.107	.328	-.434
290	1108	-.075	.100	.264	-.463
290	1109	-.091	.103	.264	-.448
290	1110	-.055	.086	.211	-.325
290	1111	-.049	.097	.230	-.359
290	1112	-.066	.100	.275	-.511
290	1113	-.029	.103	.391	-.363
290	1114	-.068	.090	.245	-.442
290	1115	-.075	.091	.213	-.413
290	1116	-.076	.096	.266	-.424
290	1117	-.042	.092	.261	-.314
290	1118	-.075	.111	.263	-.470
290	1119	-.046	.090	.283	-.371
290	1120	-.055	.096	.240	-.395
290	1121	-.069	.092	.245	-.379
290	1122	-.061	.095	.275	-.409
290	1123	-.051	.098	.236	-.372
290	1124	-.048	.090	.325	-.325
290	1125	-.046	.093	.312	-.425
290	1126	-.060	.101	.252	-.434
290	1201	-.097	.103	.272	-.508
290	1202	-.106	.123	.292	-.524
290	1203	-.079	.116	.275	-.467
290	1204	-.102	.098	.232	-.508
290	1205	-.153	.127	.223	-.760
290	1206	-.158	.125	.218	-.739
290	1207	-.103	.097	.170	-.469
290	1208	-.059	.094	.257	-.363
290	1209	-.070	.097	.237	-.412
290	1210	-.063	.092	.278	-.397
290	1211	-.120	.098	.188	-.465
290	1212	-.080	.101	.205	-.433
290	1213	-.079	.099	.229	-.410
290	1214	-.123	.116	.232	-.540
290	1215	-.063	.093	.188	-.361
290	1216	-.057	.094	.324	-.369
290	1217	-.046	.092	.283	-.309
290	1218	-.051	.093	.254	-.374
290	1219	-.050	.104	.272	-.387
290	1220	-.049	.095	.272	-.411
290	1221	-.049	.095	.260	-.369
290	1222	-.041	.088	.272	-.335
290	1223	-.047	.096	.270	-.372
290	1224	-.006	.106	.423	-.336
290	1225	-.045	.101	.254	-.390
290	1226	-.036	.090	.252	-.358
290	1227	-.048	.094	.259	-.372
290	1228	-.046	.095	.247	-.338
290	1229	-.039	.092	.267	-.389
290	1301	-.012	.108	.339	-.448
290	1302	-.057	.132	.421	-.572
290	1303	-.069	.135	.328	-.596
290	1304	-.045	.113	.339	-.467
290	1305	-.058	.102	.330	-.465
290	1306	-.017	.110	.386	-.407
290	1307	.000	.097	.489	-.315
290	1308	-.037	.121	.370	-.485
290	1309	-.044	.100	.283	-.394
290	1311	-.040	.101	.428	-.401
290	1312	-.002	.100	.396	-.367
290	1313	.041	.107	.485	-.317
290	1314	-.017	.092	.277	-.301
290	1315	-.064	.097	.251	-.404
290	1316	-.055	.088	.281	-.365
290	1317	-.057	.098	.252	-.452
290	1318	-.055	.094	.261	-.368
290	1319	-.041	.098	.285	-.382
290	1320	-.045	.094	.296	-.376
290	1321	-.039	.088	.266	-.371
290	1322	-.060	.095	.242	-.402
290	1323	-.050	.107	.312	-.439
290	1324	.003	.105	.369	-.337
290	1325	-.031	.099	.362	-.370
290	1326	-.017	.086	.295	-.304
290	1327	-.021	.097	.259	-.315
290	1328	-.048	.098	.276	-.405
290	1329	-.051	.096	.308	-.419
290	1330	-.042	.117	.396	-.475
290	1331	-.100	.116	.377	-.512
290	1401	.009	.116	.569	-.312
290	1402	-.166	.119	.208	-.678
290	1403	.063	.123	.577	-.304
290	1404	.065	.127	.595	-.411
290	1405	-.129	.118	.187	-.673
290	1406	.059	.117	.504	-.291
290	1407	.045	.121	.499	-.387
290	1408	.025	.116	.463	-.314
290	1409	-.020	.104	.395	-.372
290	1410	-.026	.099	.489	-.335
290	1411	-.021	.093	.369	-.314
290	1412	.030	.106	.406	-.348
290	1413	.068	.129	.560	-.273

WD	TAP	CPMEAN	CPRMS	CPMAX	CPMIN	WD	TAP	CPMEAN	CPRMS	CPMAX	CPMIN	WD	TAP	CPMEAN	CPRMS	CPMAX	CPMIN
290	1414	-.022	.108	.359	-.440	290	1929	-.069	.110	.362	-.400	300	1111	-.049	.098	.248	-.448
290	1415	-.016	.096	.466	-.343	290	1930	-.069	.110	.281	-.462	300	1112	-.061	.119	.289	-.435
290	1416	-.016	.097	.294	-.299	290	1931	-.061	.095	.212	-.363	300	1113	-.031	.120	.375	-.397
290	1417	.015	.094	.292	-.307	290	1932	-.044	.088	.201	-.344	300	1114	-.078	.094	.253	-.458
290	1418	.044	.133	.569	-.387	290	1933	-.157	.129	.216	-.542	300	1115	-.092	.103	.244	-.499
290	1419	-.006	.097	.441	-.334	290	1934	-.099	.107	.217	-.470	300	1116	-.086	.100	.222	-.437
290	1420	.056	.138	.506	-.370	290	1935	-.082	.103	.258	-.415	300	1117	-.040	.097	.286	-.404
290	1421	.037	.132	.495	-.463	290	1936	-.075	.104	.308	-.433	300	1118	-.060	.104	.273	-.440
290	1422	-.053	.099	.282	-.363	290	1937	-.065	.096	.273	-.467	300	1119	-.043	.093	.276	-.347
290	1423	-.016	.098	.282	-.404	290	1938	-.062	.094	.238	-.378	300	1120	-.059	.110	.312	-.522
290	1424	.011	.100	.373	-.340	290	1939	-.052	.095	.268	-.459	300	1121	-.065	.107	.245	-.429
290	1425	.034	.106	.443	-.261	290	1940	-.085	.128	.367	-.549	300	1122	-.054	.109	.248	-.420
290	1426	.012	.112	.573	-.353	290	1941	-.073	.099	.333	-.455	300	1123	-.047	.099	.281	-.382
290	1427	-.040	.104	.260	-.413	290	1942	-.056	.111	.298	-.462	300	1124	-.048	.101	.429	-.454
290	1428	-.029	.099	.304	-.399	290	1943	-.051	.099	.280	-.406	300	1125	-.049	.106	.286	-.418
290	1429	-.001	.099	.383	-.320	290	1944	-.048	.088	.254	-.351	300	1126	-.062	.103	.235	-.449
290	1430	.022	.097	.416	-.289	290	1945	-.074	.106	.323	-.437	300	1201	-.109	.114	.289	-.508
290	1431	.048	.108	.409	-.330	290	1946	-.051	.105	.330	-.417	300	1202	-.103	.120	.326	-.493
290	1432	.008	.110	.398	-.291	290	1947	-.035	.105	.295	-.457	300	1203	-.079	.114	.324	-.425
290	1433	.021	.097	.367	-.313	290	1948	-.041	.102	.295	-.364	300	1204	-.118	.102	.199	-.464
290	1434	.022	.112	.484	-.350	290	1949	-.063	.098	.203	-.391	300	1205	-.157	.132	.345	-.658
290	1435	.007	.114	.439	-.355	290	1950	-.056	.114	.342	-.427	300	1206	-.159	.131	.333	-.695
290	1901	-.071	.094	.283	-.366	290	1951	-.116	.115	.218	-.627	300	1207	-.110	.108	.238	-.497
290	1902	.081	.109	.421	-.315	290	1952	-.087	.103	.254	-.427	300	1208	-.061	.100	.294	-.444
290	1903	.179	.094	.435	-.158	290	1953	-.056	.115	.331	-.392	300	1209	-.062	.091	.246	-.403
290	1904	.002	.103	.331	-.311	290	1954	-.058	.110	.294	-.436	300	1210	-.053	.102	.336	-.408
290	1905	.002	.105	.319	-.345	290	1955	-.048	.097	.302	-.394	300	1211	-.122	.098	.225	-.467
290	1906	-.056	.107	.303	-.423	290	1956	-.060	.097	.233	-.427	300	1212	-.073	.103	.292	-.404
290	1907	-.004	.108	.505	-.356	290	1957	-.047	.117	.393	-.404	300	1213	-.069	.098	.217	-.417
290	1908	-.029	.100	.279	-.466	290	1958	-.046	.099	.255	-.404	300	1214	-.136	.131	.282	-.588
290	1909	-.071	.110	.259	-.488	290	1959	-.078	.097	.220	-.473	300	1215	-.064	.092	.259	-.380
290	1910	-.056	.101	.271	-.465	290	1960	-.065	.097	.302	-.370	300	1216	-.065	.101	.315	-.559
290	1911	-.071	.097	.208	-.406	290	1961	-.061	.092	.238	-.463	300	1217	-.046	.096	.294	-.365
290	1912	-.062	.101	.284	-.378	290	1962	-.060	.105	.277	-.511	300	1218	-.051	.092	.272	-.337
290	1913	-.020	.101	.383	-.383	290	1963	.012	.106	.396	-.339	300	1219	-.044	.106	.352	-.504
290	1914	-.090	.091	.239	-.400	290	1964	.041	.124	.594	-.302	300	1220	-.042	.100	.384	-.377
290	1915	-.080	.098	.249	-.401	290	1965	-.015	.107	.388	-.406	300	1221	-.049	.097	.213	-.392
290	1916	-.025	.127	.680	-.426	290	1966	-.031	.115	.452	-.459	300	1222	-.036	.103	.361	-.482
290	1917	-.035	.101	.391	-.468	290	1967	-.098	.108	.265	-.516	300	1223	-.038	.094	.307	-.372
290	1918	-.075	.115	.248	-.486	290	1968	-.067	.103	.284	-.446	300	1224	.003	.098	.329	-.282
290	1919	-.062	.106	.316	-.528	300	1101	-.099	.107	.276	-.468	300	1225	-.042	.101	.245	-.399
290	1920	-.052	.101	.286	-.415	300	1102	-.134	.114	.205	-.561	300	1226	-.036	.096	.282	-.377
290	1921	-.124	.108	.226	-.532	300	1103	-.147	.113	.157	-.602	300	1227	-.035	.096	.252	-.404
290	1922	-.079	.103	.319	-.401	300	1104	-.076	.102	.337	-.452	300	1228	-.045	.099	.315	-.394
290	1923	-.066	.104	.289	-.563	300	1105	-.069	.103	.252	-.425	300	1229	-.031	.090	.265	-.352
290	1924	-.050	.103	.378	-.381	300	1106	-.087	.108	.241	-.518	300	1301	-.001	.116	.475	-.431
290	1925	-.062	.101	.251	-.423	300	1107	-.050	.103	.246	-.419	300	1302	-.044	.151	.499	-.549
290	1926	-.052	.116	.332	-.442	300	1108	-.084	.103	.289	-.406	300	1303	-.058	.152	.512	-.507
290	1927	-.100	.104	.185	-.464	300	1109	-.091	.107	.327	-.419	300	1304	-.036	.110	.319	-.438
290	1928	-.078	.104	.291	-.487	300	1110	-.053	.107	.327	-.484	300	1305	-.063	.107	.292	-.482

WD	TAP	CPMEAN	CPRMS	CPMAX	CPMIN
300	1306	.002	.112	.451	-.286
300	1307	.022	.118	.439	-.446
300	1308	-.027	.118	.321	-.590
300	1309	-.041	.114	.309	-.456
300	1311	-.044	.101	.427	-.466
300	1312	.013	.124	.470	-.388
300	1313	.058	.122	.587	-.346
300	1314	-.013	.098	.365	-.410
300	1315	-.064	.113	.292	-.657
300	1316	-.055	.096	.281	-.416
300	1317	-.066	.116	.355	-.482
300	1318	-.045	.111	.315	-.441
300	1319	-.036	.106	.346	-.443
300	1320	-.045	.102	.312	-.415
300	1321	-.039	.101	.286	-.411
300	1322	-.059	.097	.235	-.343
300	1323	-.044	.103	.253	-.392
300	1324	.008	.107	.432	-.341
300	1325	-.019	.098	.312	-.293
300	1326	-.001	.108	.428	-.430
300	1327	-.014	.098	.292	-.408
300	1328	-.044	.111	.273	-.421
300	1329	-.047	.110	.368	-.403
300	1330	-.029	.116	.354	-.438
300	1331	-.095	.116	.316	-.497
300	1401	.022	.119	.450	-.448
300	1402	-.171	.118	.220	-.632
300	1403	.064	.120	.624	-.337
300	1404	.103	.136	.716	-.317
300	1405	-.140	.131	.276	-.754
300	1406	.065	.124	.509	-.307
300	1407	.071	.125	.526	-.365
300	1408	.051	.118	.546	-.342
300	1409	-.012	.108	.444	-.377
300	1410	-.033	.105	.335	-.390
300	1411	-.015	.105	.367	-.359
300	1412	.040	.108	.422	-.322
300	1413	.090	.131	.627	-.275
300	1414	-.023	.106	.264	-.370
300	1415	-.012	.105	.419	-.419
300	1416	.000	.098	.394	-.312
300	1417	.028	.094	.362	-.279
300	1418	.052	.121	.500	-.393
300	1419	.005	.103	.396	-.410
300	1420	.068	.126	.552	-.380
300	1421	.051	.133	.537	-.376
300	1422	-.050	.097	.271	-.356
300	1423	-.010	.098	.348	-.362
300	1424	.007	.104	.365	-.388
300	1425	.038	.111	.497	-.304
300	1426	.023	.111	.428	-.305
300	1427	-.030	.108	.349	-.542
300	1428	-.019	.100	.406	-.377
300	1429	.008	.102	.408	-.352
300	1430	.035	.107	.435	-.285
300	1431	.060	.112	.455	-.297
300	1432	.019	.110	.403	-.302
300	1433	.020	.115	.463	-.421
300	1434	.056	.114	.428	-.307
300	1435	.025	.118	.453	-.409
300	1901	-.065	.105	.397	-.509
300	1902	.070	.104	.556	-.278
300	1903	.177	.093	.478	-.120
300	1904	.011	.107	.446	-.391
300	1905	.008	.093	.328	-.284
300	1906	-.045	.097	.276	-.349
300	1907	-.006	.123	.449	-.449
300	1908	-.023	.097	.275	-.381
300	1909	-.061	.106	.225	-.466
300	1910	-.048	.095	.243	-.353
300	1911	-.074	.103	.323	-.399
300	1912	-.065	.106	.308	-.459
300	1913	-.014	.110	.498	-.409
300	1914	-.090	.102	.233	-.452
300	1915	-.078	.105	.265	-.432
300	1916	-.014	.109	.389	-.319
300	1917	-.027	.109	.350	-.447
300	1918	-.063	.105	.280	-.527
300	1919	-.054	.104	.323	-.412
300	1920	-.050	.097	.290	-.432
300	1921	-.112	.112	.285	-.474
300	1922	-.084	.114	.276	-.484
300	1923	-.070	.106	.273	-.479
300	1924	-.041	.108	.313	-.421
300	1925	-.069	.103	.255	-.434
300	1926	-.062	.105	.246	-.363
300	1927	-.107	.107	.236	-.523
300	1928	-.065	.110	.397	-.427
300	1929	-.070	.104	.278	-.603
300	1930	-.061	.104	.248	-.404
300	1931	-.065	.111	.322	-.439
300	1932	-.047	.084	.189	-.377
300	1933	-.153	.123	.181	-.662
300	1934	-.097	.103	.224	-.456
300	1935	-.094	.115	.295	-.526
300	1936	-.081	.112	.328	-.484
300	1937	-.070	.108	.352	-.536
300	1938	-.066	.109	.245	-.588
300	1939	-.054	.100	.273	-.439
300	1940	-.078	.123	.330	-.531
300	1941	-.066	.107	.318	-.476
300	1942	-.052	.105	.278	-.405
300	1943	-.040	.099	.271	-.335
300	1944	-.045	.082	.236	-.304
300	1945	-.067	.110	.334	-.425
300	1946	-.052	.113	.369	-.393
300	1947	-.030	.115	.391	-.477
300	1948	-.030	.109	.359	-.402
300	1949	-.074	.101	.271	-.444
300	1950	-.062	.105	.271	-.364
300	1951	-.121	.118	.225	-.659
300	1952	-.076	.109	.324	-.433
300	1953	-.048	.105	.284	-.402
300	1954	-.045	.105	.304	-.377
300	1955	-.046	.111	.282	-.426
300	1956	-.062	.097	.225	-.367
300	1957	-.039	.117	.386	-.555
300	1958	-.037	.097	.269	-.372
300	1959	-.087	.106	.314	-.521
300	1960	-.066	.105	.287	-.441
300	1961	-.062	.102	.297	-.443
300	1962	-.061	.114	.373	-.530
300	1963	.019	.109	.401	-.307
300	1964	.061	.115	.542	-.359
300	1965	-.007	.116	.379	-.449
300	1966	-.027	.111	.389	-.386
300	1967	-.100	.111	.309	-.494
300	1968	-.063	.098	.274	-.443
310	1101	-.092	.105	.255	-.474
310	1102	-.114	.119	.262	-.530
310	1103	-.131	.103	.232	-.546
310	1104	-.067	.096	.220	-.468
310	1105	-.048	.096	.268	-.374
310	1106	-.076	.115	.279	-.475
310	1107	-.030	.098	.370	-.374
310	1108	-.054	.105	.269	-.416
310	1109	-.070	.099	.303	-.442
310	1110	-.035	.108	.297	-.428
310	1111	-.037	.103	.316	-.424
310	1112	-.047	.093	.256	-.423
310	1113	-.001	.112	.531	-.340
310	1114	-.049	.101	.294	-.408
310	1115	-.059	.099	.258	-.369
310	1116	-.060	.098	.326	-.362
310	1117	-.029	.093	.307	-.354
310	1118	-.049	.112	.299	-.434
310	1119	-.034	.094	.295	-.402
310	1120	-.039	.103	.367	-.434
310	1121	-.049	.100	.367	-.371
310	1122	-.038	.102	.371	-.384

WD	TAP	CPMEAN	CPRMS	CPMAX	CPMIN
310	1123	-.033	.094	.317	-.322
310	1124	-.035	.097	.243	-.497
310	1125	-.031	.100	.284	-.353
310	1126	-.042	.100	.289	-.355
310	1201	-.087	.105	.256	-.438
310	1202	-.090	.120	.274	-.627
310	1203	-.067	.116	.296	-.579
310	1204	-.087	.104	.272	-.462
310	1205	-.139	.133	.257	-.718
310	1206	-.145	.135	.284	-.787
310	1207	-.092	.104	.264	-.513
310	1208	-.026	.097	.343	-.331
310	1209	-.038	.093	.317	-.399
310	1210	-.030	.099	.265	-.360
310	1211	-.080	.103	.263	-.512
310	1212	-.055	.097	.294	-.358
310	1213	-.053	.095	.246	-.350
310	1214	-.104	.110	.302	-.579
310	1215	-.040	.096	.307	-.411
310	1216	-.043	.094	.345	-.377
310	1217	-.034	.091	.285	-.332
310	1218	-.027	.104	.312	-.384
310	1219	-.029	.090	.335	-.334
310	1220	-.025	.092	.298	-.353
310	1221	-.030	.097	.296	-.366
310	1222	-.026	.084	.260	-.287
310	1223	-.028	.092	.265	-.338
310	1224	.010	.100	.398	-.361
310	1225	-.024	.099	.288	-.369
310	1226	-.017	.096	.301	-.290
310	1227	-.026	.095	.294	-.306
310	1228	-.023	.096	.367	-.411
310	1229	-.016	.090	.311	-.330
310	1301	-.026	.117	.308	-.417
310	1302	-.045	.125	.515	-.495
310	1303	-.058	.127	.446	-.540
310	1304	-.024	.103	.677	-.417
310	1305	-.048	.107	.277	-.378
310	1306	-.002	.106	.400	-.342
310	1307	.025	.122	.417	-.393
310	1308	-.014	.122	.523	-.420
310	1309	-.029	.094	.263	-.407
310	1311	-.037	.104	.332	-.425
310	1312	.013	.113	.494	-.345
310	1313	.055	.118	.618	-.309
310	1314	-.002	.095	.350	-.337
310	1315	-.053	.101	.268	-.397
310	1316	-.044	.092	.296	-.420
310	1317	-.049	.110	.456	-.522
310	1318	-.043	.099	.344	-.356

WD	TAP	CPMEAN	CPRMS	CPMAX	CPMIN
310	1319	-.022	.099	.308	-.317
310	1320	-.033	.100	.381	-.385
310	1321	-.022	.096	.324	-.359
310	1322	-.040	.095	.288	-.348
310	1323	-.036	.094	.246	-.389
310	1324	.019	.107	.370	-.336
310	1325	-.019	.092	.288	-.335
310	1326	.006	.111	.355	-.345
310	1327	-.007	.104	.334	-.377
310	1328	-.030	.091	.269	-.374
310	1329	-.032	.095	.280	-.322
310	1330	-.019	.111	.355	-.384
310	1331	-.078	.113	.275	-.509
310	1401	.005	.111	.394	-.380
310	1402	-.136	.114	.257	-.578
310	1403	.058	.124	.613	-.363
310	1404	.067	.130	.671	-.390
310	1405	-.118	.121	.345	-.743
310	1406	.059	.112	.456	-.382
310	1407	.057	.122	.531	-.389
310	1408	.040	.099	.382	-.296
310	1409	.010	.102	.412	-.295
310	1410	.001	.104	.370	-.345
310	1411	-.007	.089	.333	-.290
310	1412	.038	.098	.349	-.296
310	1413	.088	.125	.618	-.334
310	1414	.000	.101	.370	-.330
310	1415	.005	.099	.328	-.303
310	1416	-.002	.097	.344	-.303
310	1417	.025	.092	.395	-.301
310	1418	.051	.126	.536	-.402
310	1419	.017	.103	.352	-.361
310	1420	.073	.132	.621	-.425
310	1421	.052	.133	.561	-.533
310	1422	-.036	.098	.266	-.342
310	1423	-.002	.099	.341	-.351
310	1424	.014	.096	.354	-.302
310	1425	.029	.093	.389	-.263
310	1426	.024	.113	.349	-.383
310	1427	-.015	.093	.343	-.341
310	1428	-.005	.096	.345	-.336
310	1429	.013	.099	.358	-.323
310	1430	.029	.090	.354	-.259
310	1431	.057	.101	.374	-.284
310	1432	.025	.109	.501	-.349
310	1433	.030	.105	.433	-.289
310	1434	.043	.108	.454	-.313
310	1435	.017	.111	.405	-.316
310	1901	-.039	.099	.289	-.363
310	1902	.088	.098	.474	-.230

WD	TAP	CPMEAN	CPRMS	CPMAX	CPMIN
310	1903	.190	.093	.481	-.139
310	1904	.020	.113	.423	-.313
310	1905	.024	.100	.365	-.311
310	1906	-.035	.104	.343	-.504
310	1907	.019	.122	.464	-.401
310	1908	-.010	.111	.350	-.406
310	1909	-.064	.094	.251	-.336
310	1910	-.047	.108	.292	-.385
310	1911	-.051	.112	.329	-.499
310	1912	-.052	.099	.337	-.371
310	1913	-.001	.115	.467	-.415
310	1914	-.073	.098	.318	-.462
310	1915	-.065	.109	.293	-.416
310	1916	-.006	.122	.464	-.376
310	1917	-.020	.111	.360	-.399
310	1918	-.070	.108	.265	-.457
310	1919	-.050	.108	.300	-.446
310	1920	-.041	.101	.283	-.409
310	1921	-.099	.109	.263	-.532
310	1922	-.060	.109	.292	-.452
310	1923	-.047	.115	.314	-.464
310	1924	-.030	.103	.304	-.392
310	1925	-.072	.103	.277	-.470
310	1926	-.046	.102	.247	-.365
310	1927	-.082	.103	.256	-.466
310	1928	-.058	.116	.406	-.507
310	1929	-.044	.108	.304	-.429
310	1930	-.051	.107	.351	-.564
310	1931	-.048	.113	.286	-.516
310	1932	-.038	.096	.245	-.344
310	1933	-.134	.109	.192	-.617
310	1934	-.082	.115	.289	-.516
310	1935	-.064	.118	.282	-.516
310	1936	-.068	.104	.314	-.450
310	1937	-.053	.106	.316	-.592
310	1938	-.058	.104	.270	-.424
310	1939	-.047	.106	.323	-.468
310	1940	-.069	.122	.302	-.475
310	1941	-.061	.106	.291	-.422
310	1942	-.044	.107	.334	-.367
310	1943	-.038	.099	.284	-.369
310	1944	-.041	.086	.220	-.312
310	1945	-.067	.106	.275	-.443
310	1946	-.047	.109	.316	-.402
310	1947	-.034	.116	.357	-.436
310	1948	-.040	.101	.304	-.363
310	1949	-.075	.100	.237	-.481
310	1950	-.046	.102	.249	-.373
310	1951	-.102	.110	.249	-.492
310	1952	-.073	.117	.371	-.513

WD	TAP	CPMEAN	CPRMS	CPMAX	CPMIN	WD	TAP	CPMEAN	CPRMS	CPMAX	CPMIN	WD	TAP	CPMEAN	CPRMS	CPMAX	CPMIN
310	1953	-.040	.109	.401	-.469	320	1209	-.024	.092	.318	-.287	320	1331	-.099	.113	.314	-.482
310	1954	-.041	.108	.362	-.525	320	1210	-.028	.093	.310	-.360	320	1401	.046	.124	.687	-.320
310	1955	-.035	.112	.325	-.458	320	1211	-.065	.097	.252	-.387	320	1402	-.134	.117	.224	-.580
310	1956	-.045	.107	.274	-.442	320	1212	-.065	.096	.262	-.375	320	1403	.156	.152	.792	-.276
310	1957	-.032	.105	.532	-.357	320	1213	-.060	.101	.217	-.390	320	1404	.026	.117	.409	-.458
310	1958	-.030	.108	.324	-.359	320	1214	-.119	.115	.251	-.559	320	1405	-.103	.116	.491	-.551
310	1959	-.066	.113	.306	-.566	320	1215	-.028	.095	.272	-.324	320	1406	.098	.121	.654	-.247
310	1960	-.062	.101	.304	-.352	320	1216	-.024	.107	.280	-.359	320	1407	.037	.117	.431	-.487
310	1961	-.048	.101	.299	-.405	320	1217	-.038	.094	.233	-.395	320	1408	.056	.107	.522	-.277
310	1962	-.060	.106	.274	-.460	320	1218	-.021	.091	.298	-.309	320	1409	.049	.115	.494	-.263
310	1963	.014	.112	.403	-.370	320	1219	-.035	.091	.325	-.327	320	1410	.039	.113	.497	-.301
310	1964	.052	.118	.575	-.331	320	1220	-.020	.095	.249	-.303	320	1411	.009	.096	.344	-.348
310	1965	-.009	.118	.483	-.472	320	1221	-.015	.101	.282	-.351	320	1412	.029	.098	.420	-.281
310	1966	-.024	.110	.301	-.368	320	1222	-.027	.092	.295	-.301	320	1413	.066	.111	.634	-.281
310	1967	-.079	.112	.271	-.698	320	1223	-.034	.094	.350	-.387	320	1414	.023	.091	.361	-.271
310	1968	-.052	.103	.262	-.430	320	1224	-.007	.096	.290	-.320	320	1415	.034	.105	.433	-.250
320	1101	-.114	.110	.359	-.532	320	1225	-.014	.086	.267	-.330	320	1416	-.002	.093	.269	-.318
320	1102	-.138	.125	.313	-.613	320	1226	-.013	.089	.317	-.301	320	1417	.011	.094	.314	-.301
320	1103	-.145	.122	.350	-.607	320	1227	-.024	.092	.269	-.314	320	1418	.088	.134	.763	-.330
320	1104	-.094	.112	.336	-.494	320	1228	-.034	.101	.290	-.364	320	1419	.042	.121	.509	-.368
320	1105	-.059	.104	.263	-.625	320	1229	-.006	.093	.333	-.320	320	1420	.118	.143	.863	-.308
320	1106	-.134	.134	.286	-.667	320	1301	-.081	.127	.256	-.497	320	1421	.088	.133	.542	-.344
320	1107	.029	.112	.504	-.350	320	1302	-.128	.121	.267	-.610	320	1422	-.043	.104	.253	-.401
320	1108	-.030	.119	.334	-.476	320	1303	-.135	.126	.268	-.814	320	1423	-.019	.100	.305	-.350
320	1109	-.064	.097	.268	-.392	320	1304	-.035	.108	.359	-.367	320	1424	.008	.110	.340	-.369
320	1110	-.040	.106	.266	-.436	320	1305	-.058	.116	.328	-.442	320	1425	.012	.099	.349	-.290
320	1111	-.036	.096	.273	-.345	320	1306	-.029	.097	.369	-.372	320	1426	.031	.099	.384	-.287
320	1112	-.056	.116	.318	-.463	320	1307	.027	.112	.400	-.380	320	1427	-.021	.094	.332	-.313
320	1113	.079	.137	.657	-.305	320	1308	-.023	.120	.418	-.440	320	1428	-.015	.096	.253	-.294
320	1114	-.025	.094	.326	-.389	320	1309	-.027	.106	.330	-.315	320	1429	.007	.104	.308	-.313
320	1115	-.051	.098	.310	-.353	320	1311	-.052	.095	.255	-.439	320	1430	.018	.093	.426	-.337
320	1116	-.060	.101	.201	-.457	320	1312	-.020	.097	.358	-.358	320	1431	.038	.099	.446	-.269
320	1117	-.032	.101	.313	-.434	320	1313	.064	.109	.535	-.306	320	1432	.014	.096	.386	-.298
320	1118	-.068	.114	.359	-.544	320	1314	-.005	.099	.325	-.402	320	1433	.072	.113	.503	-.266
320	1119	-.037	.105	.362	-.408	320	1315	-.041	.093	.245	-.369	320	1434	.025	.103	.405	-.310
320	1120	-.062	.117	.355	-.620	320	1316	-.038	.102	.364	-.415	320	1435	-.006	.102	.378	-.333
320	1121	-.053	.101	.290	-.441	320	1317	-.060	.104	.387	-.367	320	1901	-.027	.095	.337	-.369
320	1122	-.034	.105	.351	-.415	320	1318	-.063	.102	.262	-.431	320	1902	.081	.111	.465	-.294
320	1123	-.029	.103	.374	-.343	320	1319	-.008	.107	.365	-.379	320	1903	.189	.111	.531	-.177
320	1124	-.034	.103	.372	-.411	320	1320	-.022	.098	.287	-.368	320	1904	.061	.107	.400	-.310
320	1125	-.018	.099	.335	-.335	320	1321	-.022	.096	.289	-.397	320	1905	.023	.104	.403	-.368
320	1126	-.031	.099	.397	-.356	320	1322	-.034	.096	.354	-.350	320	1906	-.020	.110	.313	-.386
320	1201	-.103	.108	.242	-.584	320	1323	-.026	.104	.330	-.353	320	1907	.084	.125	.502	-.289
320	1202	-.103	.118	.258	-.528	320	1324	.019	.119	.407	-.387	320	1908	.015	.109	.360	-.388
320	1203	-.065	.113	.281	-.520	320	1325	-.033	.091	.304	-.331	320	1909	-.094	.118	.273	-.563
320	1204	-.092	.101	.216	-.462	320	1326	-.003	.104	.312	-.366	320	1910	-.079	.105	.219	-.438
320	1205	-.123	.120	.232	-.538	320	1327	-.002	.095	.292	-.326	320	1911	-.026	.115	.414	-.473
320	1206	-.103	.118	.241	-.521	320	1328	-.029	.105	.315	-.313	320	1912	-.015	.118	.387	-.411
320	1207	-.094	.108	.265	-.542	320	1329	-.024	.105	.341	-.348	320	1913	.076	.130	.562	-.296
320	1208	-.027	.099	.274	-.334	320	1330	-.021	.117	.462	-.433	320	1914	-.041	.110	.401	-.433

WD	TAP	CPMEAN	CPRMS	CPMAX	CPMIN	WD	TAP	CPMEAN	CPRMS	CPMAX	CPMIN	WD	TAP	CPMEAN	CPRMS	CPMAX	CPMIN
320	1915	-.049	.119	.353	-.419	320	1965	.012	.114	.473	-.457	330	1221	-.004	.106	.367	-.312
320	1916	.072	.145	.665	-.363	320	1966	-.008	.107	.341	-.390	330	1222	-.017	.095	.275	-.373
320	1917	.036	.120	.540	-.415	320	1967	-.087	.101	.218	-.432	330	1223	-.017	.093	.275	-.331
320	1918	-.103	.124	.302	-.649	320	1968	-.046	.103	.336	-.488	330	1224	-.010	.095	.330	-.377
320	1919	-.089	.112	.268	-.464	330	1101	-.107	.123	.327	-.550	330	1225	.006	.100	.395	-.326
320	1920	-.052	.101	.306	-.437	330	1102	-.142	.123	.373	-.573	330	1226	.001	.101	.352	-.329
320	1921	-.105	.118	.391	-.523	330	1103	-.135	.130	.265	-.552	330	1227	-.014	.105	.318	-.419
320	1922	-.035	.099	.297	-.343	330	1104	-.063	.127	.291	-.552	330	1228	-.015	.096	.267	-.355
320	1923	-.007	.111	.403	-.406	330	1105	-.038	.108	.268	-.392	330	1229	.014	.100	.343	-.270
320	1924	.011	.109	.510	-.397	330	1106	-.090	.128	.361	-.706	330	1301	-.106	.117	.205	-.583
320	1925	-.075	.116	.330	-.421	330	1107	.059	.113	.485	-.275	330	1302	-.146	.111	.245	-.567
320	1926	-.060	.112	.281	-.452	330	1108	.004	.107	.330	-.314	330	1303	-.158	.122	.287	-.614
320	1927	-.065	.126	.326	-.443	330	1109	-.023	.113	.292	-.399	330	1304	-.025	.111	.411	-.395
320	1928	-.021	.106	.297	-.376	330	1110	-.013	.104	.291	-.376	330	1305	-.054	.107	.273	-.424
320	1929	-.012	.107	.357	-.411	330	1111	-.016	.106	.341	-.357	330	1306	-.033	.109	.308	-.430
320	1930	-.041	.111	.282	-.380	330	1112	-.029	.110	.322	-.399	330	1307	.037	.111	.388	-.508
320	1931	-.054	.106	.282	-.338	330	1113	.092	.116	.601	-.339	330	1308	-.012	.122	.421	-.461
320	1932	-.044	.095	.275	-.423	330	1114	.009	.104	.346	-.344	330	1309	-.018	.102	.346	-.398
320	1933	-.135	.141	.371	-.772	330	1115	-.008	.101	.368	-.363	330	1311	-.045	.106	.265	-.386
320	1934	-.062	.107	.253	-.494	330	1116	-.020	.104	.296	-.380	330	1312	-.018	.102	.334	-.412
320	1935	-.024	.115	.368	-.525	330	1117	-.011	.104	.282	-.364	330	1313	.070	.122	.541	-.348
320	1936	-.028	.116	.384	-.434	330	1118	-.041	.111	.387	-.458	330	1314	.008	.104	.303	-.371
320	1937	-.043	.102	.295	-.469	330	1119	-.007	.100	.322	-.395	330	1315	-.022	.103	.319	-.351
320	1938	-.046	.103	.297	-.454	330	1120	-.026	.110	.301	-.389	330	1316	-.018	.098	.312	-.393
320	1939	-.051	.113	.342	-.411	330	1121	-.033	.105	.351	-.387	330	1317	-.049	.102	.270	-.353
320	1940	-.089	.125	.322	-.640	330	1122	-.013	.107	.371	-.351	330	1318	-.057	.105	.317	-.408
320	1941	-.040	.109	.295	-.445	330	1123	-.020	.112	.308	-.371	330	1319	.003	.113	.344	-.424
320	1942	-.019	.106	.306	-.436	330	1124	-.017	.122	.312	-.447	330	1320	-.003	.119	.320	-.437
320	1943	-.016	.092	.295	-.423	330	1125	-.000	.106	.331	-.317	330	1321	-.001	.102	.303	-.329
320	1944	-.040	.084	.246	-.325	330	1126	-.010	.108	.320	-.490	330	1322	-.014	.106	.341	-.424
320	1945	-.061	.106	.437	-.480	330	1201	-.089	.105	.229	-.510	330	1323	-.006	.110	.427	-.320
320	1946	-.039	.101	.362	-.367	330	1202	-.111	.122	.269	-.531	330	1324	.035	.114	.474	-.360
320	1947	-.012	.111	.375	-.392	330	1203	-.073	.116	.305	-.459	330	1325	-.022	.103	.281	-.377
320	1948	-.034	.102	.351	-.381	330	1204	-.090	.109	.222	-.468	330	1326	.013	.102	.320	-.308
320	1949	-.071	.113	.321	-.456	330	1205	-.130	.126	.237	-.595	330	1327	.012	.104	.336	-.329
320	1950	-.053	.111	.290	-.457	330	1206	-.102	.123	.291	-.498	330	1328	-.012	.100	.329	-.396
320	1951	-.106	.135	.323	-.609	330	1207	-.104	.113	.268	-.512	330	1329	-.002	.101	.384	-.365
320	1952	-.049	.102	.290	-.370	330	1208	-.006	.094	.282	-.275	330	1330	-.001	.115	.471	-.344
320	1953	-.029	.106	.316	-.446	330	1209	-.010	.101	.332	-.319	330	1331	-.089	.120	.278	-.585
320	1954	-.028	.113	.305	-.407	330	1210	-.018	.106	.309	-.338	330	1401	.100	.117	.576	-.285
320	1955	-.042	.101	.285	-.369	330	1211	-.058	.101	.224	-.416	330	1402	-.112	.139	.331	-.634
320	1956	-.046	.103	.305	-.437	330	1212	-.054	.095	.279	-.392	330	1403	.198	.146	.685	-.308
320	1957	-.010	.128	.613	-.503	330	1213	-.040	.093	.298	-.322	330	1404	.008	.127	.463	-.453
320	1958	-.024	.101	.325	-.358	330	1214	-.110	.115	.273	-.612	330	1405	-.100	.144	.488	-.686
320	1959	-.078	.112	.281	-.510	330	1215	-.015	.098	.296	-.326	330	1406	.139	.143	.628	-.222
320	1960	-.057	.114	.357	-.437	330	1216	-.011	.105	.328	-.465	330	1407	.014	.135	.551	-.447
320	1961	-.044	.099	.294	-.410	330	1217	-.012	.107	.388	-.343	330	1408	.071	.122	.621	-.425
320	1962	-.066	.103	.218	-.477	330	1218	-.018	.102	.323	-.356	330	1409	.050	.119	.509	-.319
320	1963	-.019	.115	.406	-.383	330	1219	-.023	.100	.304	-.419	330	1410	.047	.113	.551	-.303
320	1964	.064	.114	.457	-.390	330	1220	-.010	.105	.345	-.278	330	1411	.012	.101	.336	-.414

WD	TAP	CPMEAN	CPRMS	CPMAX	CPMIN
330	1412	.039	.110	.512	-.383
330	1413	.060	.129	.573	-.342
330	1414	.043	.105	.526	-.312
330	1415	.052	.112	.506	-.310
330	1416	-.010	.107	.305	-.425
330	1417	.006	.093	.322	-.274
330	1418	.087	.124	.698	-.290
330	1419	.015	.112	.553	-.332
330	1420	.150	.132	.725	-.246
330	1421	.120	.144	.574	-.349
330	1422	-.041	.097	.320	-.362
330	1423	-.027	.103	.309	-.358
330	1424	-.008	.108	.357	-.449
330	1425	.019	.112	.441	-.319
330	1426	.020	.107	.496	-.350
330	1427	-.016	.103	.362	-.479
330	1428	-.015	.105	.354	-.315
330	1429	-.006	.106	.354	-.317
330	1430	.013	.097	.335	-.399
330	1431	.043	.109	.466	-.351
330	1432	.013	.107	.364	-.324
330	1433	.048	.113	.460	-.292
330	1434	.027	.111	.369	-.310
330	1435	-.032	.115	.342	-.409
330	1901	-.015	.106	.326	-.348
330	1902	.125	.097	.447	-.239
330	1903	.236	.088	.510	-.131
330	1904	.061	.114	.430	-.367
330	1905	.070	.099	.406	-.275
330	1906	.016	.102	.333	-.441
330	1907	.082	.109	.531	-.315
330	1908	.022	.108	.374	-.286
330	1909	-.070	.109	.338	-.465
330	1910	-.056	.099	.290	-.402
330	1911	.005	.112	.371	-.351
330	1912	.015	.109	.380	-.356
330	1913	.079	.125	.705	-.277
330	1914	-.011	.106	.299	-.358
330	1915	-.012	.105	.362	-.394
330	1916	.089	.124	.609	-.266
330	1917	.035	.101	.362	-.264
330	1918	-.092	.117	.199	-.734
330	1919	-.062	.111	.255	-.521
330	1920	-.027	.105	.302	-.394
330	1921	-.041	.128	.382	-.566
330	1922	-.000	.101	.401	-.374
330	1923	.016	.108	.311	-.308
330	1924	.033	.099	.392	-.284
330	1925	-.040	.108	.331	-.386
330	1926	-.030	.100	.271	-.395

WD	TAP	CPMEAN	CPRMS	CPMAX	CPMIN
330	1927	-.008	.098	.296	-.415
330	1928	.001	.115	.373	-.433
330	1929	.025	.101	.364	-.333
330	1930	-.007	.102	.331	-.400
330	1931	-.027	.097	.267	-.382
330	1932	-.028	.094	.289	-.348
330	1933	-.075	.137	.402	-.571
330	1934	-.024	.107	.262	-.460
330	1935	.005	.110	.389	-.417
330	1936	.003	.106	.329	-.362
330	1937	-.013	.109	.378	-.362
330	1938	-.020	.106	.323	-.370
330	1939	-.023	.103	.334	-.377
330	1940	-.025	.116	.365	-.555
330	1941	-.018	.097	.278	-.450
330	1942	-.004	.102	.318	-.357
330	1943	.000	.103	.313	-.419
330	1944	-.010	.091	.262	-.306
330	1945	-.024	.115	.454	-.379
330	1946	-.014	.102	.369	-.413
330	1947	.011	.108	.333	-.344
330	1948	-.009	.100	.371	-.319
330	1949	-.035	.106	.347	-.370
330	1950	-.022	.099	.265	-.410
330	1951	-.047	.107	.322	-.425
330	1952	-.039	.113	.329	-.428
330	1953	.006	.102	.352	-.317
330	1954	.020	.109	.354	-.406
330	1955	-.016	.098	.292	-.365
330	1956	-.024	.103	.314	-.359
330	1957	.029	.123	.505	-.388
330	1958	.015	.103	.334	-.361
330	1959	-.044	.108	.361	-.477
330	1960	-.027	.104	.327	-.390
330	1961	-.018	.106	.327	-.357
330	1962	-.042	.109	.296	-.635
330	1963	-.015	.102	.312	-.365
330	1964	.074	.112	.641	-.310
330	1965	.020	.105	.400	-.332
330	1966	.002	.106	.356	-.339
330	1967	-.055	.109	.265	-.459
330	1968	-.019	.110	.336	-.405
340	1101	-.072	.106	.275	-.519
340	1102	-.077	.127	.365	-.519
340	1103	-.079	.113	.274	-.483
340	1104	-.035	.106	.309	-.381
340	1105	-.009	.098	.345	-.333
340	1106	-.045	.127	.326	-.603
340	1107	.056	.102	.418	-.407
340	1108	.023	.114	.389	-.404

WD	TAP	CPMEAN	CPRMS	CPMAX	CPMIN
340	1109	.091	.105	.322	-.354
340	1110	.002	.092	.342	-.297
340	1111	-.002	.095	.350	-.286
340	1112	-.002	.106	.316	-.409
340	1113	.082	.106	.499	-.318
340	1114	.028	.110	.437	-.299
340	1115	.007	.108	.340	-.433
340	1116	.009	.090	.322	-.315
340	1117	.007	.091	.296	-.270
340	1118	-.011	.113	.385	-.401
340	1119	.009	.094	.332	-.268
340	1120	-.006	.102	.351	-.393
340	1121	-.020	.092	.319	-.312
340	1122	-.004	.095	.336	-.331
340	1123	-.003	.097	.349	-.333
340	1124	.003	.098	.321	-.365
340	1125	.021	.100	.375	-.348
340	1126	.013	.096	.376	-.385
340	1201	-.049	.101	.261	-.457
340	1202	-.090	.119	.326	-.564
340	1203	-.050	.114	.353	-.523
340	1204	-.053	.093	.259	-.402
340	1205	-.097	.121	.337	-.601
340	1206	-.074	.119	.357	-.570
340	1207	-.051	.098	.244	-.398
340	1208	.007	.099	.374	-.302
340	1209	.003	.097	.304	-.318
340	1210	.002	.099	.304	-.308
340	1211	-.032	.102	.344	-.369
340	1212	-.037	.103	.324	-.444
340	1213	-.026	.106	.318	-.381
340	1214	-.081	.120	.295	-.610
340	1215	.003	.095	.286	-.324
340	1216	.001	.092	.277	-.322
340	1217	.005	.090	.294	-.374
340	1218	.000	.095	.326	-.253
340	1219	-.006	.099	.296	-.330
340	1220	.002	.102	.421	-.327
340	1221	.012	.105	.378	-.287
340	1222	.005	.101	.301	-.429
340	1223	-.008	.097	.341	-.320
340	1224	-.003	.113	.306	-.406
340	1225	.014	.100	.287	-.305
340	1226	.016	.086	.299	-.263
340	1227	.004	.099	.314	-.340
340	1228	-.004	.100	.334	-.337
340	1229	.028	.097	.353	-.300
340	1301	-.071	.106	.242	-.482
340	1302	-.116	.117	.263	-.535
340	1303	-.119	.126	.278	-.591

WD	TAP	CPMEAN	CPRMS	CPMAX	CPMIN
340	1304	-.001	.102	.344	-.422
340	1305	-.018	.114	.329	-.422
340	1306	.001	.102	.314	-.325
340	1307	.048	.095	.352	-.289
340	1308	.011	.123	.410	-.434
340	1309	.007	.100	.313	-.343
340	1311	-.017	.111	.405	-.343
340	1312	.001	.106	.337	-.307
340	1313	.079	.105	.493	-.257
340	1314	.028	.090	.319	-.279
340	1315	.004	.101	.295	-.302
340	1316	.003	.093	.324	-.286
340	1317	-.023	.095	.303	-.422
340	1318	-.038	.093	.320	-.351
340	1319	.012	.096	.326	-.308
340	1320	.009	.097	.318	-.345
340	1321	.012	.097	.365	-.335
340	1322	.006	.093	.373	-.319
340	1323	.013	.100	.359	-.434
340	1324	.052	.116	.401	-.379
340	1325	.002	.098	.280	-.361
340	1326	.023	.090	.348	-.269
340	1327	.025	.093	.377	-.259
340	1328	.009	.098	.314	-.309
340	1329	.013	.091	.396	-.379
340	1330	.011	.108	.341	-.449
340	1331	-.051	.113	.297	-.515
340	1401	.081	.128	.569	-.284
340	1402	-.078	.136	.350	-.599
340	1403	.149	.138	.673	-.353
340	1404	.023	.116	.395	-.414
340	1405	-.048	.126	.335	-.479
340	1406	.135	.110	.501	-.295
340	1407	.032	.129	.486	-.503
340	1408	.073	.117	.519	-.278
340	1409	.067	.111	.529	-.295
340	1410	.061	.110	.543	-.248
340	1411	.035	.106	.458	-.320
340	1412	.042	.104	.370	-.275
340	1413	.071	.124	.543	-.399
340	1414	.058	.107	.396	-.280
340	1415	.071	.095	.445	-.183
340	1416	.020	.101	.293	-.315
340	1417	.035	.099	.363	-.288
340	1418	.065	.115	.477	-.427
340	1419	.031	.108	.451	-.337
340	1420	.128	.120	.503	-.421
340	1421	.140	.149	.768	-.420
340	1422	-.011	.109	.349	-.419
340	1423	.025	.099	.339	-.288

WD	TAP	CPMEAN	CPRMS	CPMAX	CPMIN
340	1424	.029	.098	.383	-.283
340	1425	.043	.092	.349	-.313
340	1426	.039	.102	.348	-.384
340	1427	.019	.105	.433	-.335
340	1428	.020	.102	.458	-.308
340	1429	.036	.107	.403	-.278
340	1430	.045	.105	.442	-.362
340	1431	.049	.104	.343	-.298
340	1432	.037	.119	.400	-.439
340	1433	.060	.111	.548	-.314
340	1434	.042	.100	.430	-.270
340	1435	-.017	.107	.316	-.453
340	1901	.024	.098	.296	-.302
340	1902	.141	.091	.438	-.267
340	1903	.243	.092	.605	-.020
340	1904	.077	.110	.542	-.260
340	1905	.084	.096	.445	-.329
340	1906	.028	.105	.459	-.364
340	1907	.072	.108	.518	-.287
340	1908	.035	.103	.389	-.312
340	1909	-.043	.104	.278	-.451
340	1910	-.032	.103	.313	-.468
340	1911	.023	.108	.367	-.324
340	1912	.038	.101	.341	-.300
340	1913	.074	.101	.431	-.261
340	1914	-.009	.103	.408	-.308
340	1915	.007	.106	.360	-.388
340	1916	.084	.130	.563	-.322
340	1917	.037	.103	.365	-.340
340	1918	-.047	.115	.334	-.472
340	1919	-.028	.113	.327	-.472
340	1920	-.002	.110	.323	-.336
340	1921	-.020	.113	.349	-.451
340	1922	.020	.102	.377	-.338
340	1923	.026	.102	.381	-.301
340	1924	.034	.107	.361	-.315
340	1925	-.012	.107	.343	-.389
340	1926	-.010	.094	.329	-.352
340	1927	.005	.108	.405	-.327
340	1928	.022	.111	.466	-.338
340	1929	.027	.099	.405	-.389
340	1930	.005	.107	.396	-.368
340	1931	-.006	.098	.312	-.331
340	1932	.005	.093	.292	-.305
340	1933	-.043	.133	.428	-.723
340	1934	.004	.108	.324	-.484
340	1935	.020	.108	.406	-.343
340	1936	.022	.098	.331	-.275
340	1937	-.001	.095	.333	-.342
340	1938	-.012	.100	.343	-.326

WD	TAP	CPMEAN	CPRMS	CPMAX	CPMIN
340	1939	-.009	.101	.291	-.370
340	1940	.001	.120	.389	-.408
340	1941	-.002	.102	.319	-.371
340	1942	.019	.108	.477	-.398
340	1943	.015	.102	.343	-.312
340	1944	.006	.097	.268	-.289
340	1945	-.010	.101	.331	-.461
340	1946	.003	.101	.343	-.363
340	1947	.017	.100	.398	-.324
340	1948	.001	.105	.333	-.327
340	1949	-.013	.105	.322	-.396
340	1950	-.004	.093	.312	-.340
340	1951	-.027	.117	.422	-.433
340	1952	-.013	.108	.371	-.412
340	1953	.016	.098	.391	-.384
340	1954	.023	.108	.396	-.314
340	1955	.003	.099	.315	-.329
340	1956	.002	.101	.308	-.335
340	1957	.022	.112	.499	-.373
340	1958	.022	.107	.371	-.438
340	1959	-.020	.106	.382	-.364
340	1960	-.006	.096	.298	-.333
340	1961	-.005	.092	.312	-.315
340	1962	-.024	.102	.373	-.371
340	1963	.000	.100	.301	-.380
340	1964	.076	.116	.569	-.331
340	1965	.019	.107	.363	-.354
340	1966	.023	.108	.434	-.405
340	1967	-.029	.110	.328	-.417
340	1968	.004	.114	.338	-.322
350	1101	-.031	.116	.317	-.467
350	1102	-.031	.151	.445	-.588
350	1103	-.026	.119	.406	-.392
350	1104	-.004	.121	.486	-.542
350	1105	.014	.104	.396	-.284
350	1106	-.018	.140	.474	-.667
350	1107	.064	.103	.441	-.323
350	1108	.046	.112	.496	-.297
350	1109	.020	.109	.373	-.379
350	1110	.014	.104	.370	-.308
350	1111	.009	.102	.368	-.285
350	1112	.018	.105	.451	-.330
350	1113	.077	.134	.665	-.289
350	1114	.050	.113	.437	-.327
350	1115	.026	.112	.482	-.289
350	1116	.019	.111	.391	-.375
350	1117	.021	.106	.398	-.342
350	1118	-.003	.124	.380	-.522
350	1119	.021	.108	.313	-.368
350	1120	.011	.111	.475	-.351

WD	TAP	CPMEAN	CPRMS	CPMAX	CPMIN
350	1121	.014	.102	.360	-.299
350	1122	.023	.104	.367	-.303
350	1123	.031	.102	.374	-.273
350	1124	.024	.115	.424	-.326
350	1125	.035	.106	.365	-.279
350	1126	.025	.108	.427	-.348
350	1201	-.025	.110	.411	-.393
350	1202	-.050	.120	.330	-.488
350	1203	-.014	.116	.338	-.373
350	1204	-.022	.112	.314	-.441
350	1205	-.053	.122	.337	-.488
350	1206	-.041	.121	.339	-.454
350	1207	-.021	.112	.370	-.424
350	1208	.019	.094	.377	-.320
350	1209	.015	.092	.336	-.268
350	1210	.018	.104	.435	-.369
350	1211	-.018	.091	.271	-.321
350	1212	-.014	.090	.266	-.341
350	1213	-.013	.091	.269	-.296
350	1214	-.056	.126	.334	-.521
350	1215	.013	.097	.333	-.371
350	1216	.013	.101	.372	-.316
350	1217	.002	.093	.275	-.325
350	1218	-.005	.090	.298	-.296
350	1219	.002	.100	.278	-.447
350	1220	.015	.104	.344	-.318
350	1221	.014	.098	.348	-.323
350	1222	.004	.089	.256	-.310
350	1223	-.000	.090	.263	-.286
350	1224	.010	.099	.354	-.305
350	1225	.019	.104	.336	-.331
350	1226	.028	.101	.369	-.305
350	1227	.011	.094	.353	-.368
350	1228	.004	.096	.353	-.326
350	1229	.043	.094	.386	-.258
350	1301	-.038	.110	.319	-.481
350	1302	-.082	.122	.279	-.532
350	1303	-.084	.132	.327	-.580
350	1304	.014	.101	.342	-.395
350	1305	.003	.105	.330	-.372
350	1306	.012	.102	.335	-.346
350	1307	.059	.108	.511	-.291
350	1308	.017	.132	.395	-.589
350	1309	.013	.097	.294	-.293
350	1311	.001	.109	.394	-.365
350	1312	.016	.104	.335	-.350
350	1313	.089	.118	.504	-.279
350	1314	.043	.103	.427	-.305
350	1315	.021	.106	.432	-.303
350	1316	.017	.105	.323	-.384

WD	TAP	CPMEAN	CPRMS	CPMAX	CPMIN
350	1317	-.007	.104	.351	-.364
350	1318	-.001	.100	.345	-.291
350	1319	.041	.103	.351	-.319
350	1320	.030	.107	.396	-.305
350	1321	.027	.102	.342	-.255
350	1322	.013	.101	.349	-.370
350	1323	.023	.098	.338	-.384
350	1324	.050	.107	.444	-.370
350	1325	.014	.098	.338	-.313
350	1326	.035	.103	.345	-.298
350	1327	.034	.102	.390	-.274
350	1328	.014	.095	.318	-.291
350	1329	.021	.119	.415	-.386
350	1330	.028	.126	.467	-.503
350	1331	-.046	.134	.373	-.545
350	1401	.047	.120	.527	-.329
350	1402	-.042	.120	.318	-.528
350	1403	.113	.117	.639	-.207
350	1404	.031	.112	.390	-.468
350	1405	-.018	.133	.563	-.452
350	1406	.079	.117	.516	-.382
350	1407	.031	.115	.458	-.401
350	1408	.062	.108	.468	-.346
350	1409	.074	.119	.655	-.318
350	1410	.066	.109	.526	-.349
350	1411	.035	.098	.303	-.256
350	1412	.041	.095	.324	-.272
350	1413	.066	.121	.614	-.321
350	1414	.062	.107	.447	-.295
350	1415	.084	.117	.458	-.262
350	1416	.031	.098	.323	-.339
350	1417	.041	.090	.364	-.316
350	1418	.068	.132	.571	-.369
350	1419	.040	.114	.380	-.369
350	1420	.131	.139	.593	-.386
350	1421	.131	.153	.705	-.494
350	1422	.030	.096	.361	-.341
350	1423	.042	.104	.391	-.341
350	1424	.050	.109	.464	-.290
350	1425	.046	.101	.460	-.338
350	1426	.034	.102	.404	-.303
350	1427	.051	.106	.341	-.321
350	1428	.048	.111	.447	-.310
350	1429	.051	.106	.505	-.316
350	1430	.054	.093	.319	-.256
350	1431	.055	.093	.311	-.265
350	1432	.047	.104	.382	-.300
350	1433	.048	.107	.432	-.312
350	1434	.018	.120	.430	-.484
350	1435	-.021	.110	.354	-.486

WD	TAP	CPMEAN	CPRMS	CPMAX	CPMIN
350	1901	.055	.103	.397	-.295
350	1902	.164	.104	.602	-.268
350	1903	.257	.086	.539	-.053
350	1904	.078	.112	.430	-.283
350	1905	.094	.107	.491	-.261
350	1906	.035	.102	.353	-.388
350	1907	.072	.121	.487	-.363
350	1908	.038	.111	.503	-.284
350	1909	-.031	.105	.302	-.424
350	1910	-.016	.108	.288	-.464
350	1911	.035	.111	.414	-.295
350	1912	.051	.110	.471	-.313
350	1913	.077	.114	.532	-.252
350	1914	.016	.104	.417	-.353
350	1915	.015	.106	.381	-.336
350	1916	.061	.120	.480	-.322
350	1917	.034	.106	.424	-.295
350	1918	-.031	.112	.331	-.473
350	1919	-.014	.099	.277	-.376
350	1920	-.000	.104	.301	-.313
350	1921	.004	.125	.494	-.408
350	1922	.026	.116	.471	-.421
350	1923	.034	.110	.349	-.315
350	1924	.025	.104	.380	-.462
350	1925	.005	.105	.396	-.366
350	1926	-.002	.102	.423	-.406
350	1927	.007	.104	.500	-.368
350	1928	.023	.111	.541	-.364
350	1929	.035	.110	.502	-.319
350	1930	.011	.103	.364	-.413
350	1931	-.002	.104	.304	-.335
350	1932	.014	.098	.418	-.302
350	1933	-.013	.115	.422	-.417
350	1934	.013	.114	.427	-.393
350	1935	.024	.105	.384	-.306
350	1936	.025	.103	.347	-.341
350	1937	.015	.106	.367	-.364
350	1938	.004	.102	.360	-.371
350	1939	.004	.100	.371	-.326
350	1940	-.007	.130	.365	-.720
350	1941	.004	.106	.347	-.353
350	1942	.013	.111	.393	-.377
350	1943	.017	.093	.338	-.346
350	1944	.013	.090	.255	-.277
350	1945	.004	.113	.344	-.435
350	1946	.012	.114	.445	-.380
350	1947	.023	.111	.364	-.359
350	1948	.009	.102	.336	-.308
350	1949	-.000	.102	.349	-.313
350	1950	.005	.102	.396	-.402

WD	TAP	CPMEAN	CPRMS	CPMAX	CPMIN	WD	TAP	CPMEAN	CPRMS	CPMAX	CPMIN	WD	TAP	CPMEAN	CPRMS	CPMAX	CPMIN
350	1951	-.032	.113	.449	-.525	350	1957	.014	.110	.458	-.353	350	1963	.009	.099	.335	-.371
350	1952	-.003	.106	.320	-.346	350	1958	.023	.109	.396	-.336	350	1964	.082	.110	.442	-.264
350	1953	.016	.108	.364	-.358	350	1959	-.007	.105	.375	-.367	350	1965	.021	.113	.449	-.340
350	1954	.013	.107	.351	-.498	350	1960	.005	.100	.337	-.362	350	1966	.023	.110	.424	-.318
350	1955	.009	.104	.315	-.371	350	1961	.012	.103	.340	-.358	350	1967	-.022	.103	.282	-.434
350	1956	.009	.108	.492	-.315	350	1962	-.010	.103	.279	-.391	350	1968	.010	.105	.293	-.356

WD	TAP	CPMEAN	CPRMS	CPMAX	CPMIN
0	164	.154	.153	.791	-.449
0	165	.173	.139	.743	-.286
0	211	-.656	.296	.162	-2.250
0	259	-.669	.348	.254	-2.794
0	272	-.647	.368	.214	-3.266
0	309	-.325	.163	.183	-.959
0	320	-.313	.167	.175	-1.118
0	428	-.325	.157	.176	-.934
0	446	-.476	.225	.079	-1.459
0	452	-.521	.272	.054	-1.864
0	472	-.555	.307	.118	-2.347
0	604	.431	.208	1.218	-.331
2	164	.169	.163	.762	-.473
2	165	.192	.148	.767	-.256
2	211	-.719	.289	.116	-2.120
2	259	-.717	.377	.264	-2.583
2	272	-.756	.392	.083	-2.915
2	309	-.320	.164	.153	-1.299
2	320	-.335	.180	.126	-1.517
2	428	-.318	.151	.156	-.973
2	446	-.443	.225	.118	-1.518
2	452	-.503	.275	.135	-2.229
2	472	-.525	.268	.196	-2.316
2	604	.422	.231	1.162	-.205
4	164	.160	.153	.801	-.321
4	165	.181	.142	.783	-.228
4	211	-.761	.318	.052	-2.487
4	259	-.662	.364	.204	-2.990
4	272	-.680	.363	.141	-2.768
4	309	-.302	.153	.255	-.837
4	320	-.338	.189	.264	-1.317
4	428	-.305	.155	.178	-1.178
4	446	-.427	.191	.164	-1.574
4	452	-.527	.251	.231	-2.346
4	472	-.526	.258	.128	-2.439
4	604	.432	.216	1.236	-.174
6	164	.180	.160	.829	-.355
6	165	.197	.148	.731	-.291
6	211	-.782	.298	.007	-2.265
6	259	-.640	.374	.245	-2.696
6	272	-.763	.391	.115	-3.329
6	309	-.305	.143	.230	-.864
6	320	-.358	.173	.121	-1.194
6	428	-.305	.135	.162	-1.035
6	446	-.403	.181	.093	-1.208
6	452	-.516	.247	.198	-1.887
6	472	-.518	.263	.159	-2.278
6	604	.403	.201	1.051	-.295
8	164	.198	.155	.907	-.369
8	165	.210	.145	.910	-.371
8	211	-.775	.363	.020	-2.941
8	259	-.638	.368	.265	-2.863
8	272	-.626	.391	.161	-3.368
8	309	-.260	.155	.172	-.917
8	320	-.328	.183	.210	-1.293
8	428	-.281	.152	.144	-.819
8	446	-.366	.168	.113	-1.113
8	452	-.486	.224	.089	-1.927
8	472	-.488	.237	.078	-2.106
8	604	.346	.186	1.033	-.206
10	164	.208	.146	.839	-.223
10	165	.224	.135	.760	-.185
10	211	-.742	.315	.360	-2.232
10	259	-.611	.368	.181	-3.288
10	272	-.695	.399	.226	-3.625
10	309	-.270	.148	.192	-.791
10	320	-.348	.181	.123	-1.142
10	428	-.284	.148	.211	-.989
10	446	-.373	.172	.094	-1.629
10	452	-.517	.244	.148	-1.922
10	472	-.502	.235	.133	-1.834
10	604	.398	.197	1.095	-.218
12	164	.212	.157	.855	-.291
12	165	.222	.147	.811	-.270
12	211	-.680	.342	.164	-2.042
12	259	-.572	.376	.251	-2.596
12	272	-.514	.336	.373	-2.762
12	309	-.253	.135	.166	-.684
12	320	-.328	.164	.115	-1.367
12	428	-.280	.141	.181	-.961
12	446	-.384	.156	.082	-.999
12	452	-.543	.239	.046	-1.824
12	472	-.527	.232	.050	-1.730
12	604	.498	.198	1.124	-.145
14	164	.211	.142	.711	-.255
14	165	.224	.132	.703	-.242
14	211	-.658	.367	.292	-2.450
14	259	-.514	.366	.287	-2.938
14	272	-.529	.404	.240	-3.375
14	309	-.241	.144	.203	-.788
14	320	-.306	.164	.207	-1.092
14	428	-.277	.147	.165	-1.060
14	446	-.378	.159	.079	-1.113
14	452	-.501	.218	.084	-1.713
14	472	-.493	.211	.078	-1.883
14	604	.377	.214	1.207	-.359
16	164	.213	.148	.702	-.291
16	165	.224	.140	.762	-.283
16	211	-.563	.366	.362	-2.577
16	259	-.448	.347	.348	-2.389
16	272	-.440	.327	.560	-2.399
16	309	-.248	.126	.269	-.769
16	320	-.293	.144	.218	-.831
16	428	-.291	.138	.298	-.968
16	446	-.346	.145	.135	-.951
16	452	-.454	.197	.046	-2.072
16	472	-.439	.194	.109	-2.049
16	604	.363	.194	1.067	-.238
18	164	.227	.160	.857	-.264
18	165	.235	.153	.769	-.259
18	211	-.548	.369	.342	-1.990
18	259	-.430	.384	.349	-3.172
18	272	-.406	.363	.544	-2.489
18	309	-.232	.132	.231	-.757
18	320	-.261	.142	.234	-.886
18	428	-.260	.144	.263	-.821
18	446	-.336	.155	.123	-.987
18	452	-.433	.205	.129	-1.454
18	472	-.427	.204	.133	-1.415
18	604	.360	.202	1.380	-.135
20	164	.191	.143	.729	-.385
20	165	.198	.136	.732	-.294
20	211	-.402	.312	.458	-1.968
20	259	-.271	.297	.480	-1.668
20	272	-.266	.304	.439	-1.873
20	309	-.225	.121	.322	-.620
20	320	-.246	.126	.316	-.674
20	428	-.260	.141	.351	-.831
20	446	-.323	.151	.084	-.954
20	452	-.402	.188	.077	-1.414
20	472	-.397	.186	.082	-1.264
20	604	.346	.190	1.107	-.206
60	164	-.625	.375	.159	-3.191
60	165	-.561	.296	.112	-2.097
60	211	.367	.223	1.141	-.249
60	259	.115	.184	.942	-.634
60	272	.141	.176	.711	-.486
60	309	-.218	.133	.228	-.628
60	320	-.204	.134	.199	-.716
60	428	-.213	.141	.242	-.740
60	446	-.242	.143	.166	-.804
60	452	-.287	.156	.187	-1.111
60	472	-.279	.158	.199	-1.123
60	604	-.226	.180	.347	-1.040
62	164	-.648	.379	.207	-3.592
62	165	-.575	.294	.073	-2.427
62	211	.351	.218	1.111	-.478
62	259	.087	.172	.607	-.598
62	272	.146	.185	.787	-.425
62	309	-.239	.138	.227	-.778

WD	TAP	CPMEAN	CPRMS	CPMAX	CPMIN
62	320	-.214	.141	.268	-.736
62	428	-.227	.146	.223	-.717
62	446	-.230	.146	.220	-.747
62	452	-.278	.170	.133	-1.594
62	472	-.265	.172	.174	-1.550
62	604	-.247	.173	.296	-.967
64	164	-.610	.362	.227	-3.198
64	165	-.551	.288	.164	-2.144
64	211	.316	.222	1.078	-.335
64	259	.077	.189	.667	-.591
64	272	.115	.191	.788	-.537
64	309	-.228	.151	.268	-.740
64	320	-.214	.159	.269	-.783
64	428	-.227	.163	.360	-.916
64	446	-.240	.152	.384	-.845
64	452	-.277	.177	.303	-1.594
64	472	-.279	.179	.334	-1.688
64	604	-.280	.186	.295	-1.037
66	164	-.731	.359	.093	-3.273
66	165	-.665	.285	-.004	-1.844
66	211	.316	.204	1.102	-.328
66	259	.058	.180	.635	-.598
66	272	.102	.197	.983	-.615
66	309	-.225	.146	.358	-.776
66	320	-.198	.151	.347	-.722
66	428	-.219	.158	.358	-.750
66	446	-.229	.163	.226	-.880
66	452	-.266	.171	.238	-1.272
66	472	-.255	.176	.234	-1.249
66	604	-.308	.181	.202	-1.036
68	164	-.698	.376	.128	-3.999
68	165	-.630	.297	.066	-2.704
68	211	.320	.210	.990	-.486
68	259	.034	.192	.774	-.783
68	272	.097	.184	.673	-.527
68	309	-.242	.157	.261	-.865
68	320	-.211	.157	.227	-.940
68	428	-.252	.160	.275	-.880
68	446	-.224	.141	.254	-.802
68	452	-.263	.142	.276	-.914
68	472	-.249	.147	.287	-.897
68	604	-.321	.188	.229	-1.049
70	164	-.665	.382	.180	-2.704
70	165	-.599	.319	.196	-2.468
70	211	.261	.209	.967	-.419
70	259	.046	.195	.828	-.591
70	272	.065	.178	.791	-.448
70	309	-.230	.141	.226	-.962
70	320	-.196	.134	.240	-.797
70	428	-.237	.148	.227	-.797
70	446	-.219	.143	.239	-.843
70	452	-.241	.138	.214	-1.014
70	472	-.231	.143	.213	-.991
70	604	-.335	.185	.336	-1.139
72	164	-.643	.396	.097	-3.474
72	165	-.578	.313	.098	-2.600
72	211	.261	.214	1.010	-.407
72	259	-.016	.182	.627	-.689
72	272	.058	.188	.800	-.632
72	309	-.236	.152	.282	-1.093
72	320	-.194	.146	.354	-.694
72	428	-.244	.152	.278	-.745
72	446	-.207	.156	.333	-1.036
72	452	-.246	.159	.268	-.937
72	472	-.236	.164	.283	-.975
72	604	-.338	.193	.234	-1.360
74	164	-.626	.361	.221	-3.012
74	165	-.569	.306	.092	-2.460
74	211	.231	.207	.993	-.529
74	259	-.004	.190	.674	-.711
74	272	.039	.188	.847	-.671
74	309	-.237	.157	.264	-.820
74	320	-.200	.154	.265	-1.155
74	428	-.251	.161	.239	-.840
74	446	-.209	.155	.209	-.851
74	452	-.214	.148	.230	-.766
74	472	-.203	.153	.213	-.774
74	604	-.334	.191	.251	-1.098
76	164	-.604	.321	.068	-2.686
76	165	-.554	.262	.038	-1.875
76	211	.227	.189	.915	-.517
76	259	-.021	.175	.673	-.627
76	272	.023	.177	.732	-.788
76	309	-.255	.162	.178	-1.163
76	320	-.204	.145	.198	-.753
76	428	-.254	.150	.215	-.829
76	446	-.216	.150	.320	-.792
76	452	-.234	.144	.286	-.759
76	472	-.217	.148	.307	-.865
76	604	-.338	.175	.153	-1.159
78	164	-.549	.330	.201	-2.495
78	165	-.508	.272	.190	-1.852
78	211	.176	.205	.974	-.375
78	259	-.031	.175	.573	-.658
78	272	.002	.175	.685	-.631
78	309	-.273	.162	.214	-1.006
78	320	-.208	.144	.344	-.829
78	428	-.262	.163	.364	-1.210
78	446	-.221	.149	.322	-.887
78	452	-.219	.133	.313	-.786
78	472	-.197	.136	.340	-.757
78	604	-.330	.178	.288	-1.315
80	164	-.531	.303	.152	-2.654
80	165	-.494	.255	.099	-2.414
80	211	.206	.204	.911	-.561
80	259	-.048	.185	.612	-.679
80	272	-.010	.168	.542	-.718
80	309	-.270	.161	.280	-.786
80	320	-.208	.141	.253	-.728
80	428	-.249	.149	.292	-.728
80	446	-.200	.154	.314	-.854
80	452	-.190	.150	.275	-.742
80	472	-.173	.152	.276	-.754
80	604	-.306	.179	.224	-1.215
82	164	-.543	.298	.110	-2.433
82	165	-.503	.249	.081	-1.728
82	211	.184	.191	.827	-.412
82	259	-.047	.187	.725	-.739
82	272	-.015	.170	.617	-.643
82	309	-.290	.184	.237	-1.937
82	320	-.213	.152	.211	-.785
82	428	-.259	.155	.330	-1.025
82	446	-.241	.155	.254	-.861
82	452	-.205	.156	.309	-.689
82	472	-.189	.160	.330	-.827
82	604	-.323	.179	.140	-1.254
84	164	-.540	.297	.058	-2.658
84	165	-.506	.255	.042	-2.226
84	211	.184	.194	.835	-.540
84	259	-.064	.178	.674	-.679
84	272	-.011	.165	.611	-.518
84	309	-.304	.170	.203	-1.038
84	320	-.218	.141	.225	-.768
84	428	-.266	.152	.225	-.913
84	446	-.250	.146	.211	-.833
84	452	-.228	.144	.395	-.699
84	472	-.207	.145	.388	-.747
84	604	-.322	.168	.176	-1.403
86	164	-.522	.266	.153	-2.207
86	165	-.487	.226	.052	-1.604
86	211	.172	.180	.830	-.505
86	259	-.071	.167	.655	-1.000
86	272	-.034	.164	.641	-.603
86	309	-.344	.184	.170	-1.113
86	320	-.238	.147	.280	-.883
86	428	-.291	.174	.348	-1.026
86	446	-.282	.156	.218	-.916
86	452	-.236	.168	.289	-.877
86	472	-.222	.170	.274	-.878
86	604	-.312	.180	.206	-1.483

WD	TAP	CPMEAN	CPRMS	CPMAX	CPMIN	WD	TAP	CPMEAN	CPRMS	CPMAX	CPMIN	WD	TAP	CPMEAN	CPRMS	CPMAX	CPMIN
88	164	-.471	.225	.142	-1.625	114	211	-.034	.148	.544	-.494	122	272	-.148	.133	.354	-.582
88	165	-.437	.195	.133	-1.174	114	259	-.174	.156	.308	-.684	122	309	-.647	.402	.528	-2.150
88	211	.143	.177	.788	-.477	114	272	-.130	.137	.387	-.794	122	320	-.557	.363	.396	-2.050
88	259	-.078	.165	.509	-.667	114	309	-.841	.345	.238	-2.201	122	428	-.299	.154	.185	-.943
88	272	-.040	.156	.551	-.741	114	320	-.695	.328	.080	-2.005	122	446	-.204	.164	.284	-.856
88	309	-.367	.182	.198	-1.123	114	428	-.358	.177	.184	-1.139	122	452	-.318	.154	.158	-1.068
88	320	-.263	.151	.254	-1.151	114	446	-.290	.187	.410	-1.260	122	472	-.312	.155	.186	-.967
88	428	-.298	.166	.216	-1.079	114	452	-.293	.155	.282	-.874	122	604	-.272	.142	.165	-.789
88	446	-.263	.151	.203	-.835	114	472	-.293	.158	.302	-.839	124	164	-.355	.139	.064	-1.137
88	452	-.211	.148	.352	-.801	114	604	-.269	.141	.189	-.807	124	165	-.340	.132	.058	-.997
88	472	-.191	.149	.403	-.788	116	164	-.368	.156	.138	-1.014	124	211	-.096	.132	.355	-.729
88	604	-.287	.161	.207	-1.119	116	165	-.362	.149	.122	-.981	124	259	-.210	.142	.241	-.814
90	164	-.467	.234	.053	-2.004	116	211	-.050	.149	.472	-.518	124	272	-.158	.138	.297	-.681
90	165	-.440	.205	.044	-1.371	116	259	-.201	.151	.331	-.728	124	309	-.580	.375	.787	-1.705
90	211	.125	.168	.715	-.452	116	272	-.143	.138	.316	-.659	124	320	-.501	.350	.511	-1.891
90	259	-.089	.156	.496	-.687	116	309	-.891	.386	.193	-2.109	124	428	-.299	.162	.237	-.985
90	272	-.051	.154	.717	-.554	116	320	-.744	.368	.193	-2.148	124	446	-.180	.150	.297	-.940
90	309	-.388	.200	.371	-1.283	116	428	-.379	.184	.122	-1.134	124	452	-.301	.141	.227	-.905
90	320	-.284	.158	.342	-1.038	116	446	-.269	.187	.319	-1.117	124	472	-.302	.144	.166	-.937
90	428	-.332	.178	.290	-1.259	116	452	-.304	.152	.280	-.844	124	604	-.261	.133	.203	-.701
90	446	-.283	.166	.244	-.992	116	472	-.296	.153	.253	-.831	126	164	-.339	.141	.175	-.842
90	452	-.212	.164	.308	-.912	116	604	-.274	.138	.158	-.766	126	165	-.326	.133	.166	-.789
90	472	-.199	.165	.327	-.890	118	164	-.375	.154	.092	-1.022	126	211	-.099	.133	.476	-.478
90	604	-.286	.167	.206	-1.177	118	165	-.365	.146	.104	-1.045	126	259	-.198	.146	.370	-.684
110	164	-.371	.165	.087	-1.312	118	211	-.062	.138	.430	-.568	126	272	-.169	.145	.390	-.714
110	165	-.354	.152	.077	-.904	118	259	-.189	.153	.447	-.792	126	309	-.470	.371	.749	-1.871
110	211	-.007	.139	.517	-.477	118	272	-.142	.148	.391	-.630	126	320	-.425	.342	.335	-1.980
110	259	-.160	.149	.432	-.660	118	309	-.690	.389	.512	-2.395	126	428	-.278	.147	.246	-.835
110	272	-.120	.133	.340	-.655	118	320	-.568	.344	.530	-1.890	126	446	-.187	.152	.333	-.995
110	309	-.764	.301	.147	-2.203	118	428	-.297	.171	.170	-1.055	126	452	-.313	.140	.224	-.826
110	320	-.583	.298	.328	-2.013	118	446	-.238	.172	.275	-1.086	126	472	-.308	.142	.243	-.824
110	428	-.372	.181	.120	-1.312	118	452	-.318	.153	.190	-.923	126	604	-.271	.139	.250	-.882
110	446	-.298	.179	.331	-.995	118	472	-.315	.155	.182	-.866	128	164	-.358	.153	.154	-.901
110	452	-.267	.157	.224	-.951	118	604	-.270	.138	.141	-.878	128	165	-.351	.145	.120	-.855
110	472	-.267	.161	.223	-1.007	120	164	-.360	.150	.154	-.798	128	211	-.102	.128	.376	-.509
110	604	-.256	.134	.184	-.768	120	165	-.344	.143	.132	-.756	128	259	-.230	.158	.325	-.801
112	164	-.341	.148	.123	-1.010	120	211	-.074	.145	.431	-.603	128	272	-.169	.133	.310	-.816
112	165	-.336	.140	.096	-.937	120	259	-.196	.151	.294	-.790	128	309	-.355	.354	.764	-1.750
112	211	-.017	.149	.521	-.488	120	272	-.137	.148	.331	-.907	128	320	-.328	.302	.439	-1.837
112	259	-.172	.143	.330	-.659	120	309	-.681	.407	.539	-2.624	128	428	-.258	.134	.221	-1.126
112	272	-.116	.134	.359	-.642	120	320	-.577	.386	.376	-2.611	128	446	-.138	.119	.247	-.578
112	309	-.832	.299	.176	-1.915	120	428	-.303	.177	.305	-1.146	128	452	-.286	.131	.105	-.805
112	320	-.665	.291	.231	-1.782	120	446	-.213	.166	.263	-1.043	128	472	-.281	.134	.112	-.845
112	428	-.380	.187	.127	-1.566	120	452	-.302	.144	.436	-.899	128	604	-.250	.121	.135	-.688
112	446	-.260	.196	.352	-1.117	120	472	-.302	.146	.231	-.928	130	164	-.352	.150	.168	-.918
112	452	-.280	.159	.203	-.865	120	604	-.268	.133	.176	-.932	130	165	-.342	.141	.142	-.889
112	472	-.280	.162	.246	-.866	122	164	-.356	.142	.067	-.991	130	211	-.104	.137	.468	-.626
112	604	-.255	.153	.198	-.813	122	165	-.345	.135	.049	-.873	130	259	-.235	.155	.280	-.835
114	164	-.360	.156	.123	-1.130	122	211	-.074	.136	.397	-.559	130	272	-.180	.139	.267	-.674
114	165	-.342	.146	.112	-1.026	122	259	-.206	.140	.258	-.754	130	309	-.309	.349	.637	-1.717

WD	TAP	CPMEAN	CPRMS	CPMAX	CPMIN
130	320	-.294	.299	.532	-1.503
130	428	-.263	.136	.199	-1.082
130	446	-.146	.133	.229	-.925
130	452	-.293	.138	.106	-.950
130	472	-.288	.140	.112	-.992
130	604	-.262	.136	.171	-.820
300	164	-.040	.162	.543	-.683
300	165	-.003	.157	.581	-.582
300	211	-.229	.130	.213	-.772
300	259	-.252	.139	.179	-.887
300	272	-.232	.139	.207	-.818
300	309	-.230	.127	.218	-.622
300	320	-.223	.127	.179	-.765
300	428	-.233	.303	.838	-1.537
300	446	.010	.147	.443	-1.019
300	452	-.072	.150	.419	-1.205
300	472	-.082	.162	.419	-1.145
300	604	-.555	.398	.629	-2.447
302	164	-.032	.165	.620	-.645
302	165	.001	.157	.657	-.596
302	211	-.218	.134	.271	-.771
302	259	-.245	.144	.240	-1.180
302	272	-.251	.150	.230	-.940
302	309	-.249	.140	.241	-.721
302	320	-.240	.143	.235	-1.026
302	428	-.266	.310	.718	-1.400
302	446	.003	.149	.503	-.748
302	452	-.078	.156	.452	-1.117
302	472	-.084	.168	.486	-1.126
302	604	-.439	.412	.745	-3.179
304	164	-.042	.158	.595	-.638
304	165	-.005	.147	.564	-.664
304	211	-.208	.133	.202	-.694
304	259	-.238	.149	.197	-.995
304	272	-.217	.139	.176	-.913
304	309	-.217	.125	.171	-.732
304	320	-.209	.124	.180	-.643
304	428	-.264	.283	.876	-1.639
304	446	.014	.144	.503	-.600
304	452	-.059	.149	.611	-.679
304	472	-.068	.160	.671	-.854
304	604	-.385	.373	.957	-2.261
306	164	-.030	.155	.673	-.711
306	165	.005	.148	.708	-.550
306	211	-.198	.125	.244	-.776
306	259	-.236	.136	.212	-.848
306	272	-.203	.130	.182	-.827
306	309	-.213	.130	.180	-.675
306	320	-.203	.131	.195	-.667
306	428	-.306	.283	.618	-1.480

WD	TAP	CPMEAN	CPRMS	CPMAX	CPMIN
306	446	.002	.164	.455	-.898
306	452	-.077	.172	.366	-1.740
306	472	-.081	.182	.496	-1.610
306	604	-.291	.366	.697	-2.045
308	164	-.016	.159	.580	-.586
308	165	.022	.151	.527	-.514
308	211	-.213	.145	.279	-.707
308	259	-.236	.156	.262	-1.160
308	272	-.232	.143	.365	-.967
308	309	-.254	.143	.280	-.740
308	320	-.247	.145	.299	-.754
308	428	-.392	.285	.694	-1.785
308	446	-.023	.191	.443	-1.445
308	452	-.104	.197	.427	-1.565
308	472	-.104	.205	.470	-1.526
308	604	-.220	.380	.966	-2.428
310	164	.001	.155	.591	-.587
310	165	.038	.149	.629	-.445
310	211	-.205	.134	.294	-.673
310	259	-.229	.135	.214	-.901
310	272	-.216	.159	.214	-1.232
310	309	-.229	.143	.178	-1.051
310	320	-.220	.136	.179	-.742
310	428	-.395	.243	.501	-1.556
310	446	-.071	.224	.504	-1.521
310	452	-.155	.256	.401	-2.059
310	472	-.161	.272	.471	-2.262
310	604	-.118	.357	1.305	-1.944
312	164	.008	.150	.626	-.485
312	165	.046	.144	.702	-.422
312	211	-.199	.126	.225	-.675
312	259	-.217	.132	.171	-1.023
312	272	-.208	.132	.242	-.849
312	309	-.224	.136	.212	-.768
312	320	-.224	.132	.198	-.702
312	428	-.418	.226	.259	-1.608
312	446	-.162	.260	.383	-1.410
312	452	-.234	.286	.399	-2.107
312	472	-.250	.302	.426	-2.958
312	604	-.084	.361	.919	-1.759
314	164	.045	.160	.823	-.620
314	165	.083	.152	.693	-.527
314	211	-.212	.129	.232	-.678
314	259	-.243	.141	.189	-.957
314	272	-.248	.153	.274	-.930
314	309	-.272	.152	.206	-1.005
314	320	-.257	.147	.243	-.950
314	428	-.471	.238	.356	-1.623
314	446	-.239	.317	.438	-1.888
314	452	-.365	.395	.429	-2.641

WD	TAP	CPMEAN	CPRMS	CPMAX	CPMIN
314	472	-.360	.387	.464	-2.417
314	604	-.048	.333	.984	-1.739
316	164	.061	.148	.619	-.413
316	165	.109	.142	.655	-.344
316	211	-.221	.123	.172	-.629
316	259	-.253	.136	.124	-1.113
316	272	-.241	.153	.262	-1.229
316	309	-.279	.161	.306	-1.066
316	320	-.268	.154	.343	-1.199
316	428	-.492	.223	.192	-1.544
316	446	-.355	.350	.505	-1.944
316	452	-.474	.430	.382	-2.651
316	472	-.508	.467	.377	-3.205
316	604	-.068	.337	.739	-1.645
318	164	.095	.150	.679	-.527
318	165	.145	.141	.692	-.361
318	211	-.234	.137	.213	-.795
318	259	-.279	.163	.149	-1.111
318	272	-.341	.153	.217	-.978
318	309	-.277	.149	.146	-.970
318	320	-.267	.145	.161	-.872
318	428	-.495	.213	.142	-1.677
318	446	-.460	.351	.332	-2.132
318	452	-.608	.444	.310	-2.702
318	472	-.632	.475	.293	-3.552
318	604	-.073	.338	.856	-1.341
320	164	.096	.160	.703	-.368
320	165	.154	.150	.728	-.305
320	211	-.229	.123	.251	-.679
320	259	-.261	.142	.182	-1.006
320	272	-.260	.156	.333	-1.374
320	309	-.296	.157	.170	-.964
320	320	-.285	.159	.208	-.920
320	428	-.508	.200	.055	-2.044
320	446	-.578	.316	.138	-2.103
320	452	-.722	.396	.164	-2.708
320	472	-.755	.426	.105	-3.158
320	604	.014	.333	.829	-1.455
322	164	.116	.152	.849	-.415
322	165	.189	.148	.754	-.309
322	211	-.244	.141	.209	-.764
322	259	-.274	.185	.238	-2.665
322	272	-.275	.178	.276	-1.792
322	309	-.326	.180	.259	-1.161
322	320	-.311	.170	.246	-1.006
322	428	-.505	.199	.128	-1.350
322	446	-.605	.282	.177	-2.990
322	452	-.797	.397	.162	-2.633
322	472	-.838	.464	.083	-3.278
322	604	.052	.327	.885	-1.588

WD	TAP	CPMEAN	CPRMS	CPMAX	CPMIN
324	164	.122	.149	.660	-.465
324	165	.193	.142	.657	-.411
324	211	-.257	.134	.324	-.730
324	259	-.301	.170	.236	-1.110
324	272	-.308	.181	.185	-1.810
324	309	-.355	.178	.134	-1.257
324	320	-.351	.161	.077	-1.065
324	428	-.522	.190	.012	-1.261
324	446	-.650	.310	.143	-2.944
324	452	-.862	.457	.276	-2.886
324	472	-.915	.539	.250	-3.784
324	604	.046	.361	.964	-1.490
326	164	.129	.144	.646	-.550
326	165	.209	.136	.689	-.189
326	211	-.264	.132	.179	-.688
326	259	-.299	.170	.168	-1.394
326	272	-.299	.182	.205	-1.315
326	309	-.345	.172	.221	-1.289
326	320	-.337	.168	.152	-1.095
326	428	-.493	.190	.041	-1.315
326	446	-.620	.267	.028	-1.956
326	452	-.819	.427	.080	-2.660
326	472	-.856	.495	.038	-3.254
326	604	.096	.325	.972	-1.229
328	164	.129	.159	.850	-.486
328	165	.209	.152	.773	-.347
328	211	-.271	.141	.197	-.795
328	259	-.337	.211	.309	-1.783
328	272	-.316	.204	.168	-1.816
328	309	-.343	.179	.202	-1.131
328	320	-.347	.173	.143	-1.210
328	428	-.471	.173	.018	-1.082
328	446	-.610	.256	.119	-1.976
328	452	-.802	.394	-.017	-2.564
328	472	-.832	.458	-.012	-3.306
328	604	.135	.337	1.167	-1.476
330	164	.114	.148	.709	-.356
330	165	.190	.139	.680	-.266
330	211	-.271	.146	.246	-.760
330	259	-.314	.188	.328	-1.546
330	272	-.331	.213	.215	-2.035
330	309	-.340	.179	.183	-1.090
330	320	-.348	.173	.158	-1.157
330	428	-.439	.172	.044	-1.360
330	446	-.603	.275	.086	-2.073
330	452	-.785	.417	.006	-2.816
330	472	-.822	.493	-.021	-3.426
330	604	.198	.326	1.141	-1.195
332	164	.124	.142	.702	-.330
332	165	.204	.140	.717	-.197
332	211	-.273	.139	.189	-.805
332	259	-.352	.210	.225	-2.032
332	272	-.356	.203	.118	-1.967
332	309	-.350	.179	.080	-1.212
332	320	-.352	.171	.180	-.989
332	428	-.431	.167	.056	-1.042
332	446	-.572	.255	-.030	-1.918
332	452	-.701	.371	.086	-2.329
332	472	-.751	.459	.091	-3.155
332	604	.226	.309	1.166	-1.156
334	164	.116	.149	.618	-.374
334	165	.193	.144	.692	-.281
334	211	-.278	.147	.286	-.862
334	259	-.362	.227	.195	-2.229
334	272	-.406	.232	.176	-1.713
334	309	-.355	.182	.165	-1.290
334	320	-.380	.186	.107	-1.204
334	428	-.431	.173	.056	-1.154
334	446	-.561	.250	.014	-1.804
334	452	-.657	.357	.035	-2.518
334	472	-.689	.406	.127	-3.942
334	604	.292	.283	1.279	-1.055
336	164	.102	.152	.621	-.551
336	165	.170	.152	.704	-.389
336	211	-.284	.149	.314	-.841
336	259	-.358	.212	.233	-1.517
336	272	-.405	.234	.125	-2.089
336	309	-.360	.184	.230	-1.050
336	320	-.369	.179	.255	-1.119
336	428	-.435	.177	.115	-1.281
336	446	-.583	.275	.124	-1.973
336	452	-.666	.361	.172	-2.810
336	472	-.707	.445	.188	-3.126
336	604	.326	.285	1.196	-1.139
338	164	.103	.141	.661	-.451
338	165	.182	.138	.645	-.267
338	211	-.307	.157	.191	-.897
338	259	-.421	.254	.168	-2.017
338	272	-.416	.251	.154	-2.099
338	309	-.366	.196	.157	-1.322
338	320	-.372	.186	.151	-1.338
338	428	-.439	.183	.182	-1.066
338	446	-.550	.256	-.008	-2.029
338	452	-.618	.339	.051	-2.649
338	472	-.664	.391	.065	-3.469
338	604	.325	.277	1.173	-.995
340	164	.104	.140	.595	-.342
340	165	.186	.138	.650	-.227
340	211	-.301	.153	.163	-.818
340	259	-.405	.238	.192	-1.886
340	272	-.419	.265	.202	-2.007
340	309	-.338	.175	.190	-1.117
340	320	-.360	.161	.198	-.993
340	428	-.409	.161	.084	-1.149
340	446	-.526	.267	.249	-2.203
340	452	-.576	.329	.234	-2.123
340	472	-.630	.393	.257	-3.147
340	604	.353	.369	1.143	-.853
342	164	.107	.131	.619	-.296
342	165	.182	.128	.614	-.218
342	211	-.311	.148	.135	-.901
342	259	-.421	.255	.144	-2.818
342	272	-.481	.271	.102	-2.654
342	309	-.337	.180	.164	-1.197
342	320	-.344	.164	.181	-1.288
342	428	-.406	.160	.049	-.928
342	446	-.526	.238	.131	-1.585
342	452	-.521	.284	.214	-2.238
342	472	-.588	.338	.121	-3.111
342	604	.349	.240	1.081	-1.541
344	164	.099	.146	.593	-.351
344	165	.172	.143	.663	-.263
344	211	-.332	.164	.219	-.982
344	259	-.440	.274	.247	-2.105
344	272	-.499	.291	.127	-2.883
344	309	-.341	.180	.284	-1.170
344	320	-.360	.173	.187	-1.057
344	428	-.425	.176	.104	-1.010
344	446	-.514	.219	.068	-1.642
344	452	-.530	.282	.066	-2.565
344	472	-.573	.328	.101	-2.760
344	604	.427	.255	1.219	-.742
346	164	.109	.143	.639	-.367
346	165	.182	.138	.711	-.508
346	211	-.350	.157	.134	-1.052
346	259	-.499	.304	.190	-2.772
346	272	-.489	.299	.152	-2.771
346	309	-.315	.162	.193	-.969
346	320	-.335	.161	.161	-1.416
346	428	-.396	.160	.123	-.995
346	446	-.505	.239	.072	-1.652
346	452	-.532	.287	.086	-2.499
346	472	-.586	.337	.076	-2.592
346	604	.424	.230	1.466	-.601
348	164	.107	.139	.654	-.335
348	165	.167	.132	.603	-.244
348	211	-.367	.173	.141	-1.486
348	259	-.531	.299	.145	-2.186
348	272	-.510	.315	.203	-2.296
348	309	-.332	.175	.127	-1.134

WD	TAP	CPMEAN	CPRMS	CPMAX	CPMIN	WD	TAP	CPMEAN	CPRMS	CPMAX	CPMIN	WD	TAP	CPMEAN	CPRMS	CPMAX	CPMIN
348	320	-.326	.154	.154	-.938	352	272	-.609	.336	.143	-2.777	356	211	-.588	.276	.057	-2.336
348	428	-.397	.167	.121	-1.007	352	309	-.316	.174	.178	-1.314	356	259	-.672	.383	.144	-2.857
348	446	-.541	.262	.167	-1.809	352	320	-.314	.162	.168	-.949	356	272	-.601	.313	.202	-3.217
348	452	-.558	.287	.247	-2.071	352	428	-.366	.167	.161	-1.043	356	309	-.311	.167	.150	-1.014
348	472	-.609	.329	.171	-2.278	352	446	-.462	.205	.169	-1.396	356	320	-.301	.159	.177	-1.360
348	604	.430	.249	1.223	-1.239	352	452	-.492	.252	.071	-1.843	356	428	-.345	.157	.124	-.889
350	164	.109	.146	.753	-.368	352	472	-.550	.304	.090	-2.505	356	446	-.495	.232	.085	-1.752
350	165	.158	.138	.723	-.317	352	604	.407	.223	1.181	-.746	356	452	-.542	.279	.128	-1.868
350	211	-.392	.175	.061	-1.146	354	164	.126	.157	.811	-.361	356	472	-.577	.317	.177	-2.557
350	259	-.545	.278	.064	-2.065	354	165	.163	.146	.769	-.260	356	604	.470	.225	1.171	-.646
350	272	-.515	.302	.243	-2.226	354	211	-.471	.243	.207	-1.794	358	164	.142	.153	.715	-.356
350	309	-.310	.168	.143	-1.178	354	259	-.631	.341	.066	-3.038	358	165	.173	.142	.717	-.326
350	320	-.311	.149	.225	-.972	354	272	-.592	.340	.147	-3.625	358	211	-.570	.261	.113	-1.933
350	428	-.367	.159	.137	-1.070	354	309	-.311	.174	.194	-1.194	358	259	-.619	.307	.185	-2.438
350	446	-.500	.245	.110	-1.956	354	320	-.315	.154	.114	-.997	358	272	-.571	.332	.114	-2.718
350	452	-.514	.272	.132	-2.060	354	428	-.366	.168	.140	-1.068	358	309	-.301	.155	.189	-.993
350	472	-.568	.337	.116	-2.732	354	446	-.471	.214	.285	-2.339	358	320	-.296	.150	.240	-1.297
350	604	.419	.222	1.074	-.795	354	452	-.479	.255	.323	-2.015	358	428	-.325	.143	.176	-.828
352	164	.107	.143	.673	-.370	354	472	-.533	.288	.333	-2.501	358	446	-.457	.208	.058	-1.612
352	165	.158	.139	.636	-.293	354	604	.425	.222	1.222	-.221	358	452	-.467	.259	.149	-2.201
352	211	-.415	.192	.107	-1.427	356	164	.154	.167	.868	-.331	358	472	-.511	.277	.156	-2.661
352	259	-.549	.306	.090	-2.498	356	165	.178	.154	.790	-.264	358	604	.414	.203	1.121	-.380