Technical Report

A SHUNT LINE METERING SYSTEM FOR IRRIGATION WELLS

Agricultural Experiment Station
Colorado State University
Fort Collins, Colorado 80523

By

William C. Hill
Civil Engineering Department
Colorado State University

May, 1975

CER74-75WCH-43

Technical Report

A SHUNT LINE METERING SYSTEM FOR IRRIGATION WELLS

Agricultural Experiment Station
Colorado State University
Fort Collins, Colorado 80523

By

William C. Hill
Civil Engineering Department
Colorado State University

May, 1975

CER74-75WCH-43

ABSTRACT

A SHUNT LINE METERING SYSTEM FOR IRRIGATION WELLS

The purpose of this project was to develop a metering system which could measure the ground water use in Colorado with the following constraints placed on the instrument. The system had to be versatile to function on the many different irrigation systems in the state. It had to be relatively inexpensive, durable, reliable, and accurate to within ± 7%.

A shunt line meter design was selected due to its versatility and low cost. The main components of the system are a side contracted orifice plate, a shunt line, and small household type water meter. A side contracted orifice was used because it allows air and sediment to pass along the top and bottom of the pipe. The orifice edge was not bevelled to reduce machining costs. A magnetically coupled turbine meter was selected as the shunt line meter. It is accurate to within ± 2%, functions at low pressures, and passes sediment better than most meters. This is an accumulative flow meter which registers directly in total volume.

The shunt line metering system is driven by the small pressure difference caused by the orifice plate in the irrigation pipe. This pressure differential diverts water into the shunt line, through the turbine meter and back into the irrigation pipe downstream of the orifice.

The relationship of the metered shunt line flow to the total flow through the irrigation pipe was determined experimentally. The shunt line-irrigation pipe relationship was obtained for a wide range of

discharges, orifice sizes, and pipe sizes. This information allows immediate field installation and use without expensive on-site calibration. Thus the total water discharged from a well can be determined by reading the shunt line meter and referring to the appropriate shunt line-irrigation pipe relationship. Limited field studies to date indicate that this metering system is a viable means of measuring ground water use.

William C. Hill
Civil Engineering Department
Colorado State University
Fort Collins, Colorado 80523
May, 1975

ACKNOWLEDGMENTS

The research described in this report was carried out under the supervision of Dr. James F. Ruff, Assistant Professor of Civil Engineering, to whom are due thanks and sincere gratitude.

The suggestions of Mr. Robert A. Longenbaugh and Dr. E. Gordon Kruse are appreciated as well as their review of this report.

The author is indebted to the laboratory supervisors, Mr. Ralph Asmus and Mr. Walt Patzer, for their helpful suggestions and diligence in building the laboratory apparatus used in this project.

Special thanks are due Mr. Frances Bee, Mr. Robert Stieben, and Mr. Carl Herber, Jr. for allowing field studies using their irrigation wells to be conducted.

The author would like to express his appreciation to the Colorado State University Agricultural Experiment Station for the financial support which made this study possible. The above work was funded wholly by the Colorado State Experiment Station, Project 15-1372-0106.

The help and co-operation of Lynn Schollett for typing this report is appreciated.

TABLE OF CONTENTS

LIST OF TABLES

LIST OF FIGURES

LIST OF FIGURES - Continued

LIST OF FIGURES - Continued

LIST OF SYMBOLS

Symbol	Definition
a	Area of shunt line
A	Area of irrigation pipe
b	Intercept on plot of pipe vs shunt line discharge
c	Discharge coefficient relating well discharge to shunt line discharge
Δc	Error in determination of the discharge coefficient
C	Slope of discharge relationship for elbow meters
d	Depth of orifice segment
D	Diameter of irrigation pipe
e	Exponent for elbow meters
E	Exponent for segmental orifice shunt line meter
g	Gravitational constant
h	Head loss
h_Q	Head loss along main pipe line
h_q	Head loss along shunt line
H	Pressure differential across the 12 in. orifice meter
ΔH	Error in manometer reading
k	Intercept in the elbow meter discharge relationship
K	Slope of the pipe vs shunt line discharge plot
K_i	Components of pressure loss
K_1	Pipe friction pressure loss
K_2	Pressure loss due to orifice
K_3	Entrance loss
K_4	Pressure loss across meter

LIST OF SYMBOLS - Continued

Symbol	Definition
K_5	Loss due to elbow
K_6	Pipe friction pressure loss
K_7	Loss due to elbow
K_8	Exit loss
M	Coefficient in the orifice equation
π	Pi
q	Shunt line discharge rate
Δq	Error in determination of shunt line discharge rate
Q	Well discharge rate
ΔQ	Error in determination of well discharge rate
T	Time interval
ΔT	Error in measuring the time
V	Volume of water
ΔV	Error in deterimation of volume
V_{shunt}	Total volume of water discharged through the shunt line
V_{well}	Total volume of water discharged from the well

Chapter I

INTRODUCTION

The Problem

Colorado is an agricultural state in a semi-arid region. Recent population growth has caused a significant increase in the demand for water for domestic, industrial, and agricultural uses. Most of the surface waters in the state have been appropriated causing an increasing use of groundwater, particularly for irrigation. Recent advances in irrigation technology, particularly the center-pivot system, have opened up large areas in eastern Colorado which derive their water from wells. This greater demand for groundwater threatens the ability of the aquifers to continue to provide adequate water for the foreseeable future.

In some areas the consumptive use of well water already exceeds the rate of recharge of the aquifer, and continued growth will cause this problem to spread to other parts of the state. If consumptive use continues to exceed the recharge over a long time period, the aquifer could be pumped dry.

Surface water and ground water are physically connected and use of one supply can, in some circumstances, affect the availability of the other supply. In order to distribute the state's waters fairly and most beneficially, state regulation of water use is necessary. To achieve this goal accurate records of water use must be obtained. Presently systems exist for measuring and recording surface water use by individual users. However, there is no low cost system to measure the thousands of wells pumping ground water and this quantity of water can only be estimated. This greatly hinders regional water planning.

Objectives of Study

The main objective of this project was to develop an inexpensive metering system which would be sufficiently accurate to provide useful records of irrigation water use. An accuracy within ± 7% is assumed adequate to provide the information needed by government planning or regulatory agencies. This value has been adopted as the acceptable level of accuracy for this project. Other objectives in the design of this meter are versatility, durability, and reliability.

Although piping configurations differ greatly among individual wells, two basic types of irrigation systems exist. The first is a system where the water is pumped through a short pipe and is discharged freely into an irrigation canal. The water then flows to the fields in an open channel. The second type pipes the water to the fields under pressure and the water is then applied to the crops from gated pipes or a sprinkler system. The first type (Fig. 1) will be referred to as a "Free-Discharge Irrigation System" and the second (Fig. 2) as a "Pressure-Discharge Irrigation System".

The cost of metering each well will be the responsibility of the farmer, so total expense must be a major consideration in the selection of a metering system. The total cost of the meter will include the cost of actual hardware installed, installation costs, increased pumping costs, and administrative costs (field trips to read the meters and record keeping).

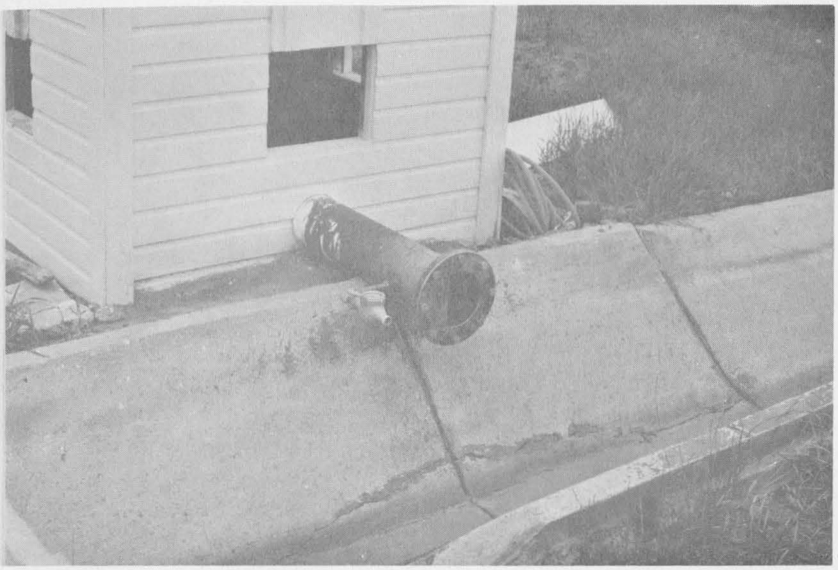

Fig. 1 Free Discharge Irrigation System

Fig. 2 Pressure Discharge Irrigation System

Commercially available flow meters have been designed primarily for industrial use where a more precise measurement is required. These meters are unduly expensive with respect to the accuracy needed for this project.

Another important design consideration is the durability and reliability of performance when operated over several irrigation seasons. Field conditions which may adversely affect the performance of the meter are sediment in the water, entrained air, intermittant pumping of water and air, severe temperature variations during the year, and irregular piping configurations.

Sediment and entrained air will not be problems except in localized areas. Intermittant pumping is also a local phenomenon occuring when the aquifer is not capable of continuously maintaining a water level above the pump intake. This is due to a general lowering of the water table,or to an aquifer with insufficient permeability to meet the demands of the pump.

The weather variations that occur during an irrigating season should not cause damage to the meters or to their calibrations. However, the meters might not be removed during the winter, so consideration must be given to the effect of prolonged exposure to subfreezing temperatures.

Chapter II

BACKGROUND

Flow Meter Design Considerations

Selection of a flow meter design must consider the limitations imposed by the existing field situations. An initial consideration is that the meter must be standardized and applicable to the various irrigation systems in use. One similarity among all wells is that the water is carried from the pump through a length of straight pipe. The methods of transporting the water to the fields vary as do the methods of application to the crops. So the development of a standardized meter should concentrate on metering the pipe flow.

Another consideration is the amount of water that can physically be measured. That is, how much water can actually pass through the meter? Well discharges vary from 250 gpm to 3000 gpm and pass through pipes with diameters ranging from 3 in. to 14 in. Meters large enough to measure these discharges would be quite large and expensive.

A feasible alternative is to use a shunt line system from the main irrigation pipe so that much smaller quantities of water are measured. Thus the two major design criteria are a pipe-oriented system to provide uniformity and a shunt line system to decrease cost and size of the metering system.

A shunt line meter consists of a flow meter in the shunt line and a pressure differential to force water through the line and meter. The pressure difference can be created by anything which introduces a head loss into the system. Generally this is caused by a sudden contraction in the pipe cross-section, such as an orifice plate; a gradual contraction, such as a nozzle; or a directional change in the pipeline, such as an elbow.

The flow meter in the shunt line must accumulate the volume of flow. Meters which are applicable for this situation are volumetric meters (nutating disk, geared or lobed impeller, etc.) or force-velocity meters (2)[1]. The volumetric meters have two drawbacks: failure to pass sediment and a high starting pressure. Force-velocity meters usually use a turbine or propeller to sense the flow of the moving fluid. These meters are preferable to volumetric meters because they are less affected by sediment, have a low starting pressure, and still maintain a high degree of accuracy.

Prior Research on Shunt Line Metering System

Replogle (7,8), Pennino and Koloseus (6), Lansford (5) and Addison (1) have experimented with an elbow shunt line system as a flow meter suitable for irrigation measurement. The system uses a shunt line connected to piezometer taps located on the internal and external radii of a pipe elbow (Fig. 3). A greater pressure is exerted by the moving water on the outside of the bend than on the inside. This causes flow through the shunt line which is measured by a household type water meter. A manometer can be used to measure the discharge through the

---

[1] Numbers in parenthesis refer to references listed in the List of References.

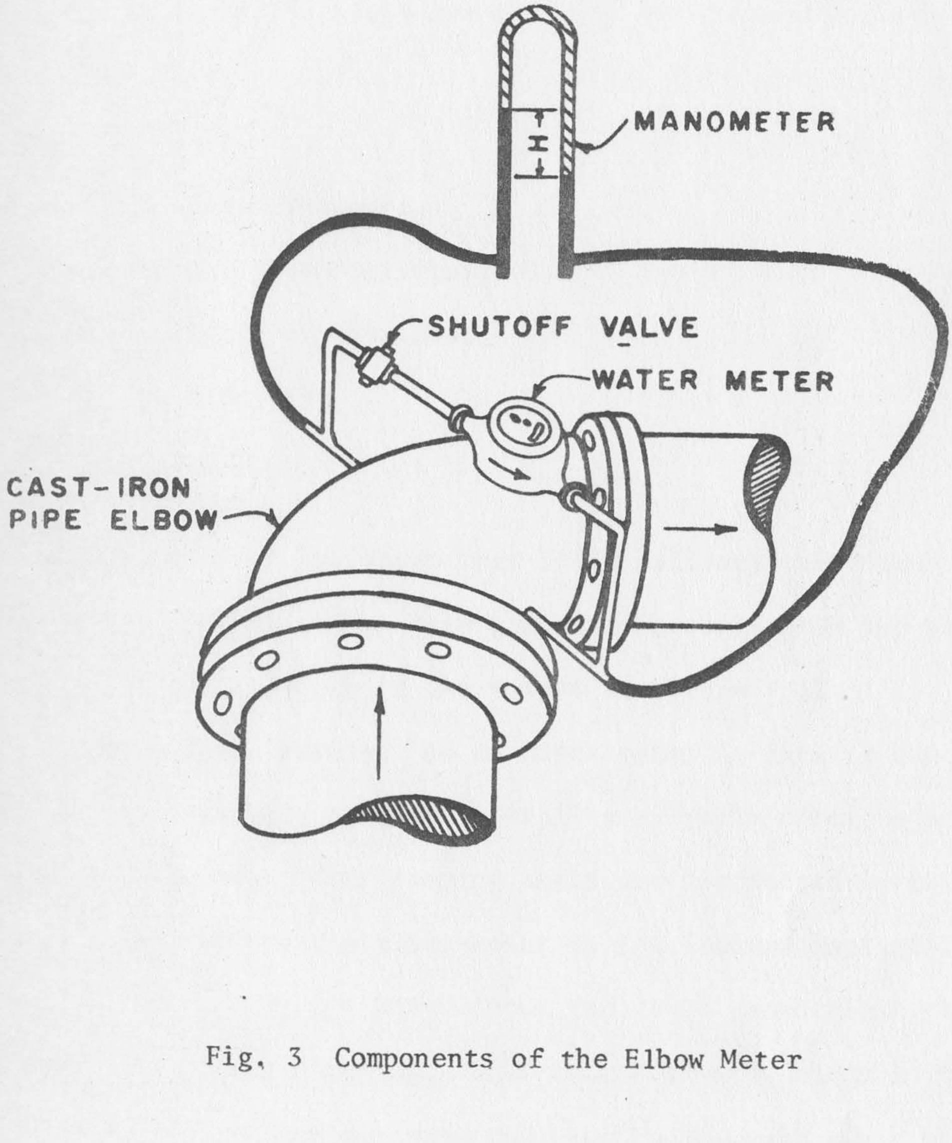

Fig. 3 Components of the Elbow Meter

elbow and a relationship between pipe discharge and meter discharge can be established. Replogle graphically found this relationship to be of the form

$$Q = k + Cq^{2e} \tag{1}$$

where

Q is the pipe discharge

q is the shunt line discharge

C is the slope of the curve

k is the intercept

e is an exponent

Replogle's work has shown that field calibration of each meter is not necessary if all elbows have been manufactured from the same die. He estimated the accuracy of the system as within ± 5%.

The principle advantage of an elbow meter is that it can be introduced without adding a pressure loss if a suitable elbow is present in the existing system. Thus pumping costs are unaffected by this system. The major drawback of the elbow meter is its limited application. Many irrigation systems do not have elbows and it is impractical to introduce them for the sake of metering. Most center-pivot systems do have elbows but some of the new systems pass the electrical power cable through the elevated elbow.

The elbow meter shown in Fig. 3 is susceptible to error caused by the air which enters the shunt line and meter when pumping is stopped. The air is difficult to flush from the lines when pumping is resumed.

The piping configuration could be altered to have the shunt line pass below the elbow but this could result in sediment accumulating in the meter, and would also leave water in the meter and shunt line even when not pumping, endangering the meter should a hard freeze occur.

The elbow meter is also sensitive to separation of flow which results from piping obstructions upstream. Replogle suggests having a straight length of upstream pipe equal to at least 25 pipe diameters. This is often impossible under existing field situations.

Pennino and Koloseus (6) conducted experiments on elbow meters with the elbow oriented in a vertical plane. Such an orientation would restrict the use primarily to center-pivot systems. However, the meter performed poorly due to sediment entering the lower tap and, to some extent, air entering the higher tap due to bouyancy.

Kruse (4) is currently conducting research on a shunt line meter using a segmental orifice plate. His installation of this meter is limited to a pressure discharge irrigation system. Although results of the research are not complete, this design has several advantages over other meters. Kruse's design is similar to the meter which is the topic of this paper, a complete discussion of which is given in the following section of the paper.

Chapter III

THEORETICAL CONSIDERATIONS

The relationship between the accumulated flow indicated by the water meter and the flow through the main pipe is developed from parallel pipe flow theory (Fig. 4).

The pressure differential between point A and point B is the same along the main pipe as along the shunt line, $h_Q = h_Q = h$. Pipe discharge and shunt line discharge, therefore, should exhibit a direct relationship.

The relationship between pipe discharge Q , and differential pressure, h , is given by the orifice equation

$$Q = Mh^E \qquad (2)$$

where

M is a constant determined by pipe diameter and roughness

E is an exponent, equal to 0.5 (2), relating to orifice flow.

Flow through the shunt line (Fig. 4) is related to the pressure differential h , by

$$h = (\sum_{i=3}^{8} K_i) \frac{v^2}{2g} \qquad (3)$$

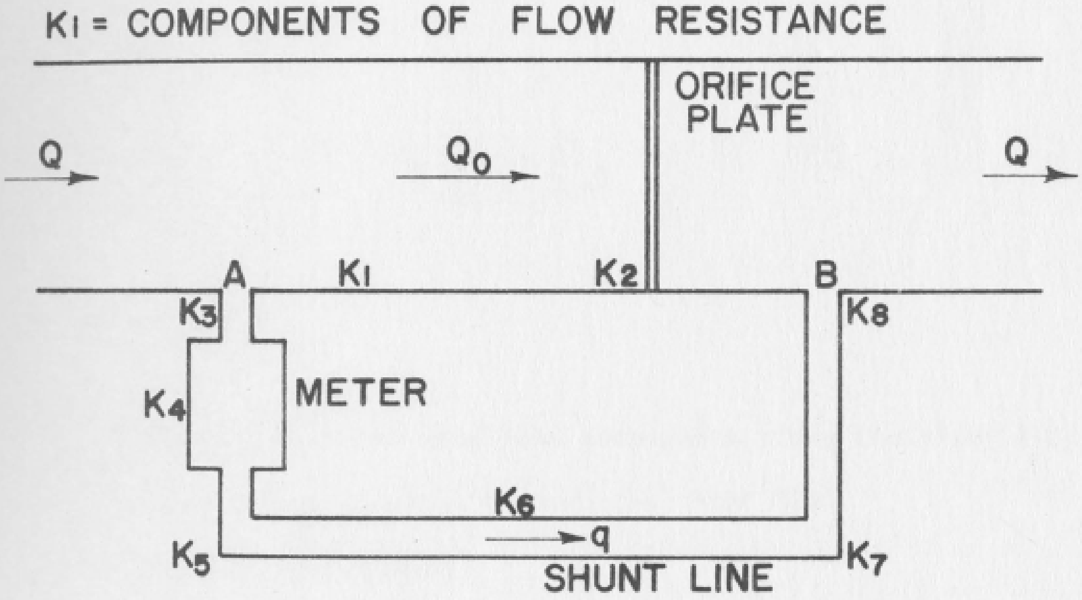

Fig. 4 Schematic Diagram of Parallel Pipe Flow

where

K_3	entrance loss
K_4	loss across meter
K_5	loss due to elbow
K_6	pipe friction loss
K_7	elbow loss
K_8	exit loss

or by substituting $q/a = v$

$$h = \left(\sum_{i=3}^{8} K_i\right) \frac{q^2}{2ga^2} \qquad (4)$$

where

$\sum_{i=3}^{8} Ki$ is the summation of head loss components along the shunt line

v is the average velocity through the shunt line

q is the shunt discharge

a is the cross-sectional area of the shunt line

g is the gravitational constant

Combining Equations 2 and 4

$$Q = M\left[\left(\sum_{i=3}^{8} K_i\right) \frac{q^2}{2ga^2}\right]^E \qquad (5)$$

$$Q = K\, q^{2E} \qquad (6)$$

where

K is a dimensionless constant, $K = M\left[\left(\sum_{i=3}^{8} K_i\right) \frac{1}{2ga^2}\right]^E$

Assuming E, is equal to 0.5, Eq. 5 becomes the linear relationship

$$Q = K\, q \qquad (7)$$

and the pipe discharge is completely defined by the shunt discharge, q. In reality the pipe discharge must exceed a certain level before the shunt line meter begins to function. Thus the actual relationship is of the form

$$Q = b + Kq \qquad (8)$$

where

b is a constant equal to the minimum pipe discharge at which the shunt line meter will function.

The relationship given by Eq. 8 is expressed in terms of discharge rates. To obtain the total volume of flow over time, the discharge rates must be integrated over the length of time during which each discharge prevailed. This gives

$$\int_0^T Q\,dt = \int_0^T (b + Kq)\,dt \qquad (9)$$

$$QT = bT + KqT \qquad (10)$$

Since it is expensive to determine the total pumping time, T , it is desirable to eliminate b from Eq. 10. By assigning b the value of zero, and forcing the straight line plot through the origin, (Fig. 5), Eq. 10 becomes

$$QT = cqT \qquad (11)$$

where

c the discharge coefficient, is a dimensionless constant

The error caused by this substitution can be evaluated by combining Eq. 10 and Eq. 11 to get

$$cqT = bT + KqT \qquad (12)$$

$$c = \frac{b}{q} + K \qquad (13)$$

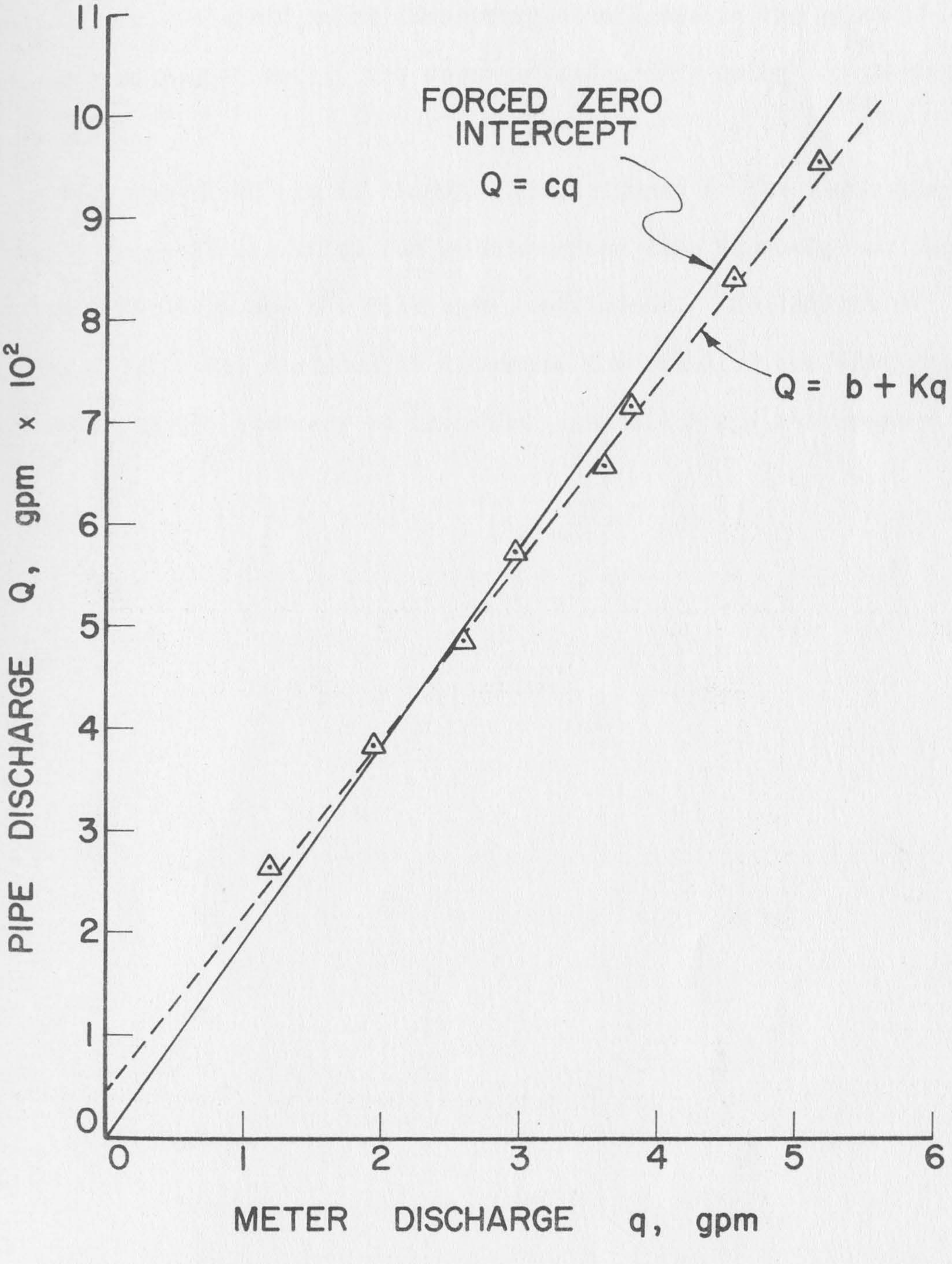

Fig. 5 Illustration of the Forced Zero Intercept

In most installations b will be very small in relation to K , making c approximately equal to K . The order of magnitude of b and K are evaluated using laboratory data later in the paper. If K and c are nearly equal, the error introduced by using c in Eq. 11 will be small.

If the pipe discharge is linearly proportional to the shunt line discharge, the well discharge can be determined from knowledge of the shunt line discharge and the discharge coefficient. The laboratory experiments were thus designed to determine the value of the discharge coefficient and the accuracy of the shunt line discharge measurement.

Chapter IV

LABORATORY EXPERIMENTS

Objectives

The main objectives of the laboratory experiments were to determine the accuracy of the shunt line metering system and to obtain sufficient information to be able to install this meter in the field without field calibration. To do this requires determination of the relationships among orifice size, pipe discharge, shunt line discharge and pipe size, as well as the accuracy of the water meter. The well to be metered must have a pipe-full discharge at all times.

Another objective was to develop a standard design for the metering system. The two main design criteria were that the shunt line configuration be simple enough to be applicable to a variety of field situations and that total expense be kept to a minimum.

Description of Metering System

The metering system used for this project consists of a shunt line turbine meter which is driven by the pressure drop created by a segmental orifice plate. Two systems were developed to accomodate both pressure discharge irrigation and free-discharge irrigation. These are illustrated in Fig. 6 and Fig. 7, respectively.

One advantage of this shunt line design is its adaptability to various field situations. Since the total length of straight pipe needed for installation never exceeds one and one half pipe diameters and the distance it extends out from the pipe is only 15 in., this meter can be installed on virtually any irrigation system. No lengthening or

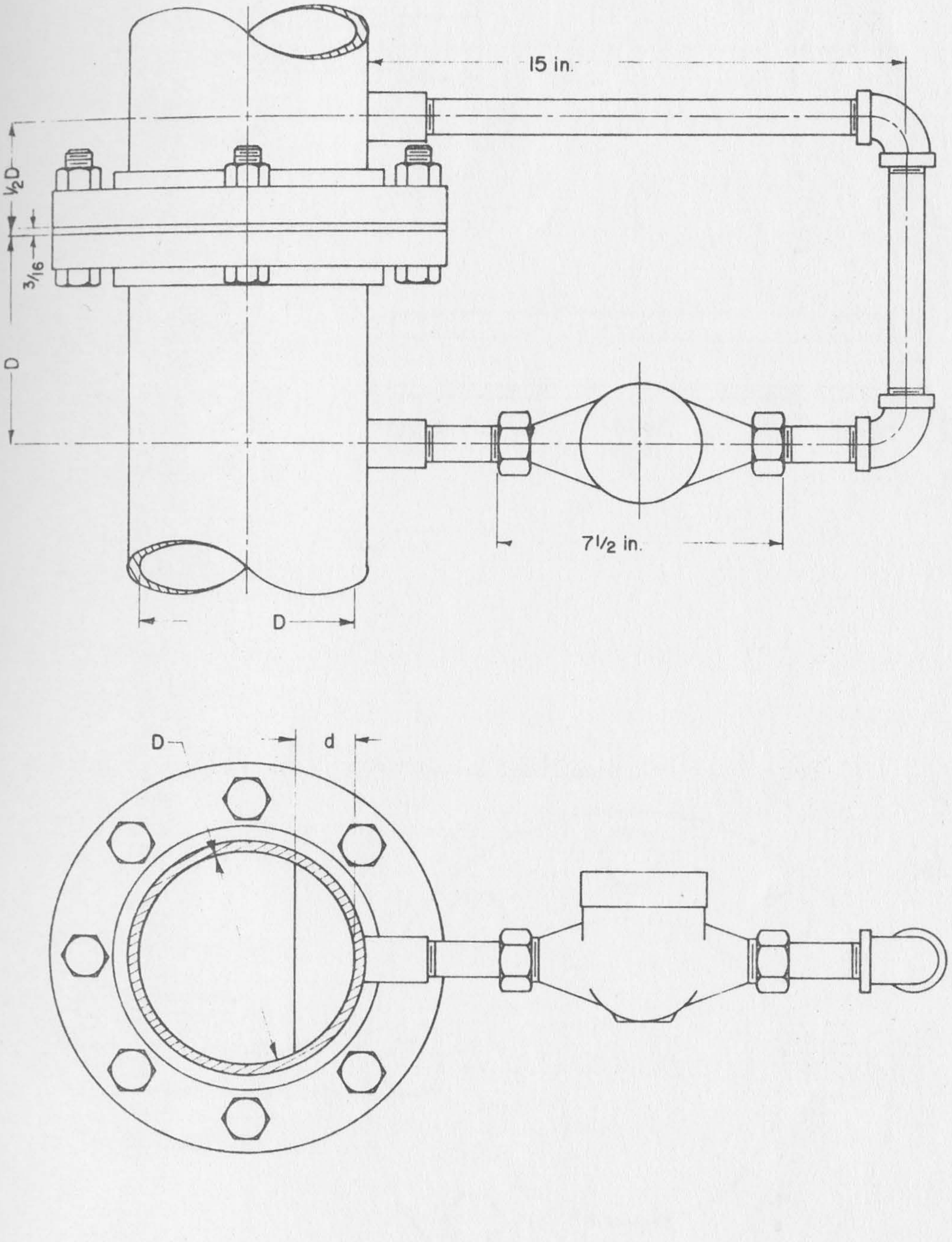

Fig. 6 Pressure Discharge Metering System

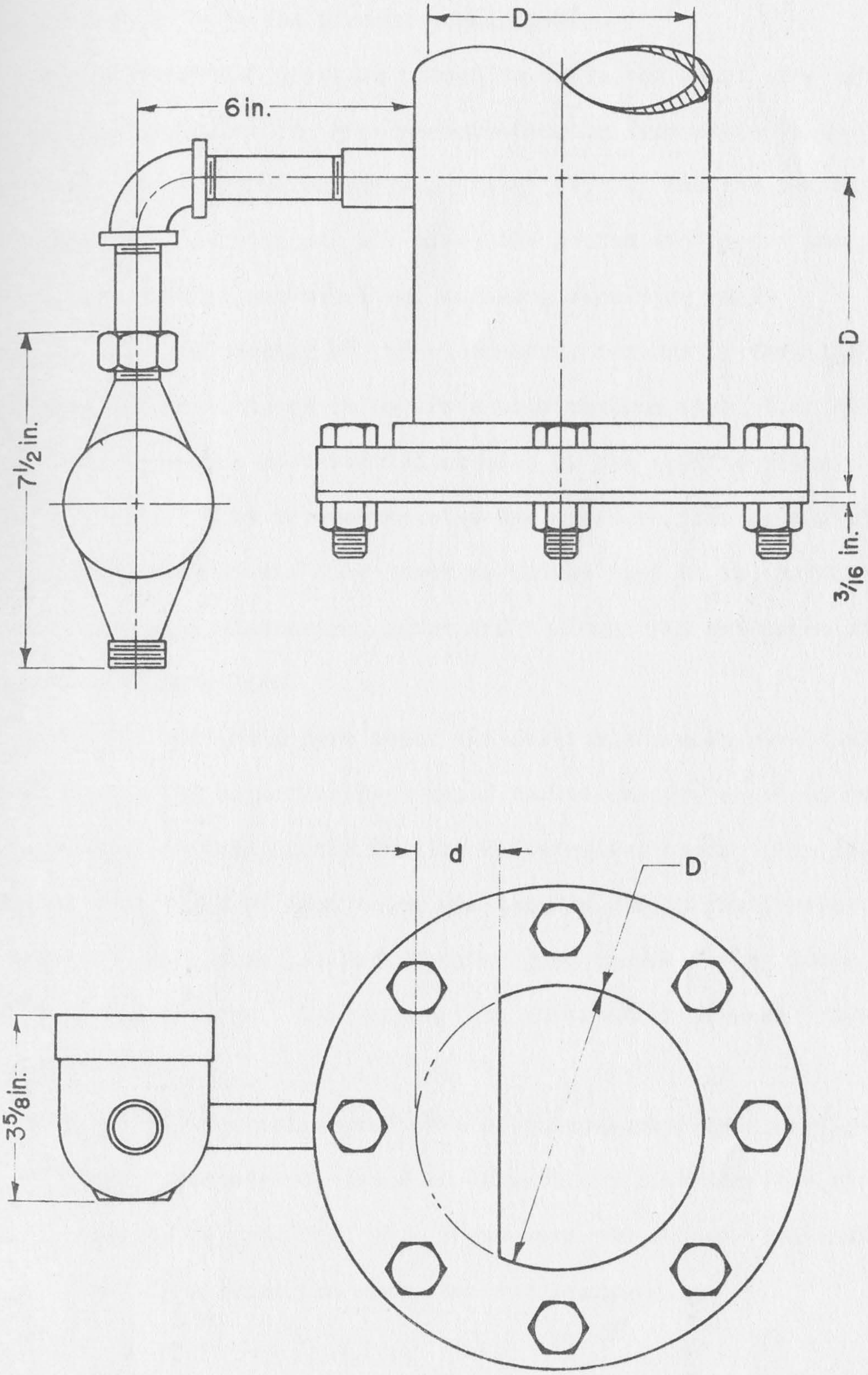

Fig. 7 Free Discharge Metering System

shortening of irrigation pipes is necessary, so the metering system has minimal effects upon the present configuration.

The differential pressure needed to drive the shunt line meter was created by installing a side-contracted orifice plate in the main line. The side-contracted orifice plate (Fig. 8) has the capability of passing the sediment and air along the bottom and top of the pipe. The orifice edge is non-bevelled, reducing machining costs.

The size and spacing of the piezometric taps which form the shunt line openings were chosen to obtain a near maximum shunt line discharge for a given pressure differential created by the orifice plate. This will allow the system to operate at a low pressure thereby minimizing increased pumping costs. The location of the taps at the vertical midpoint of the pipe discourages suspended sediment and entrained air from entering the shunt line.

A common household type meter was desirable due to availability and expense. The magnetically coupled turbine meter, which is extremely free-running, is well suited for low differential heads. The selection of a specific brand of flow meter was largely due to familiarity. Replogle (7) and Kruse (4) had reported good results using Tempe meters in shunt line systems. Based upon this information several Tempe meters were obtained.

The meters were calibrated on a weighing-bucket type calibration stand and the accuracy was found to be within ± 2.0% for flow ranges from 0.5 gpm to 10 gpm (Fig. 9). These were new meters. Initial tests in the shunt line situation were also satisfactory.

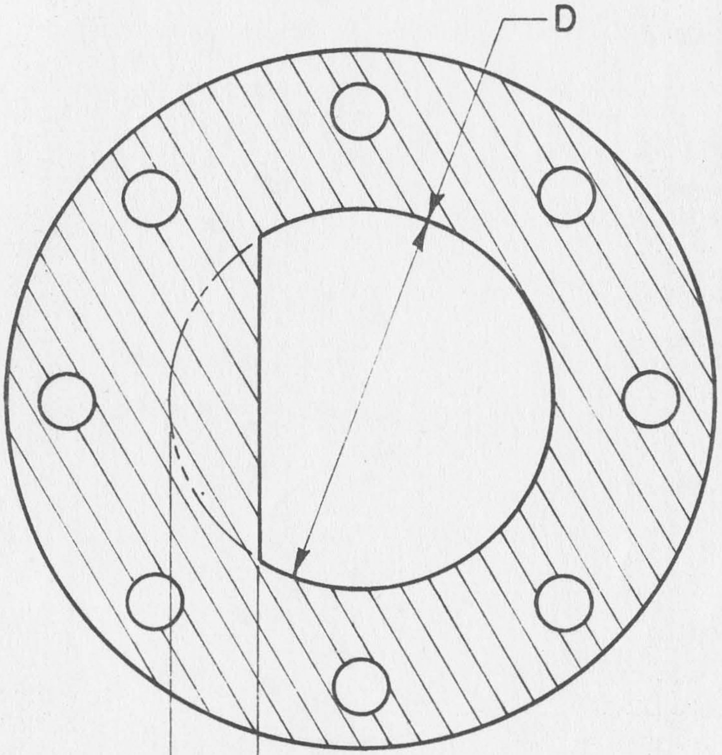

Fig. 8 Side Contracted Orifice Plate

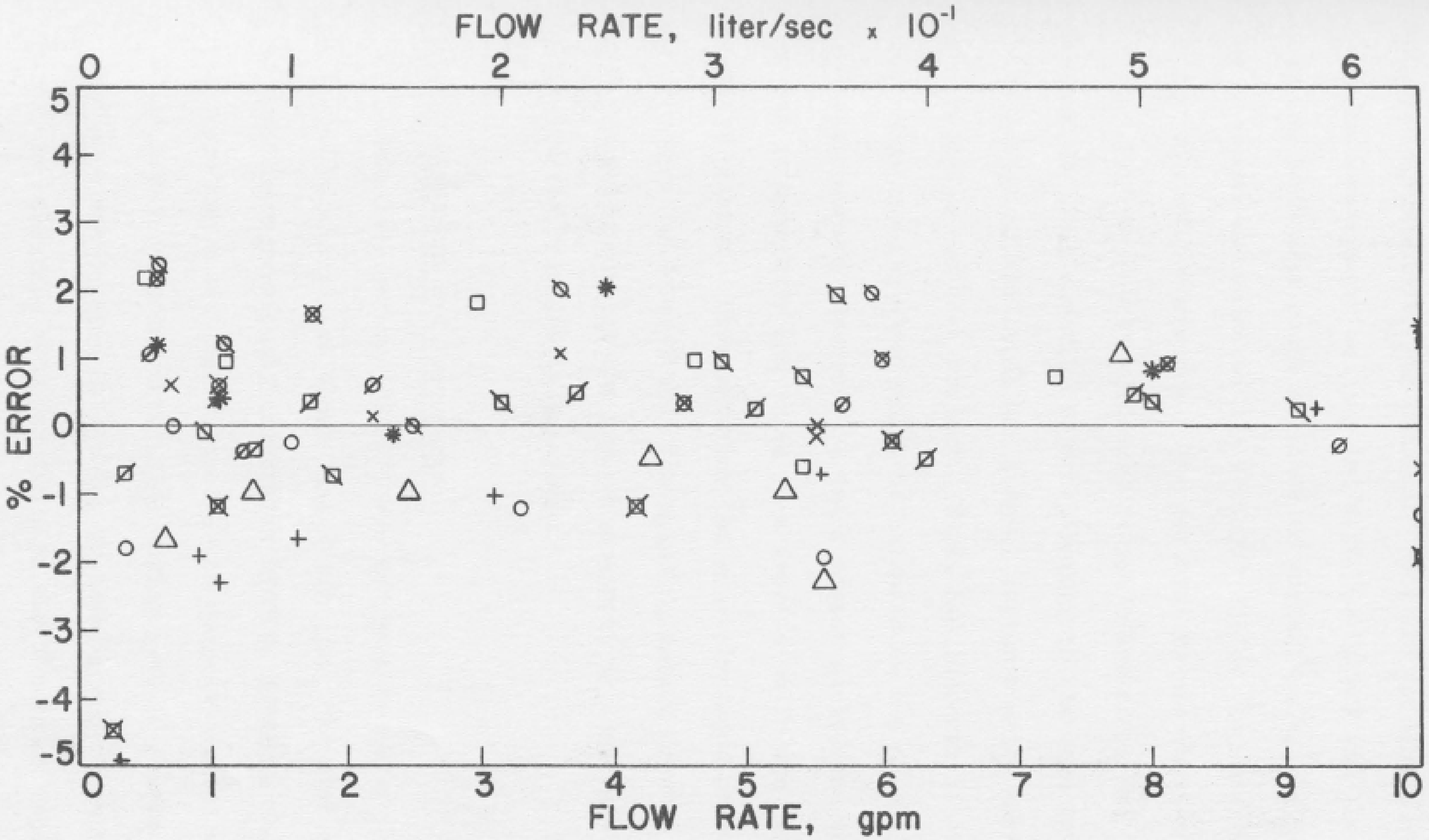

Fig. 9 Turbine Meter Calibration Results
Each symbol represents a different Tempe meter

Another, slightly more expensive, magnetically-coupled meter from a different manufacturer was obtained. The design was virtually identical to the Tempe meter and the calibrated accuracy was similar. However, no advantage could be found to warrant using the other meter. The Tempe meter was selected for this project due to less cost and knowledge of past performance. The decision to use this meter indicates the belief that the meter will perform satisfactorily, and is not meant to imply that it is superior to other meters of the same general type.

The design of the meter has several features which make it particularily suitable for this project. First and foremost is its extremely free-spinning turbine wheel which is balanced on two jewels, offering little resistance to movement. A small magnet is located on the upper end of the turbine axis and rides in a depression in the casing above the turbine chamber. Flow entering the meter impinges on the turbine blades causing rapid rotation. The spinning magnet creates a magnetic force field which couples the turbine movement to the register gears. Thus very little friction is developed.

Laboratory Apparatus and Procedures

The laboratory set-up (Fig.10) was designed to obtain relationships between pipe discharge and shunt line discharge. The pipe discharge was measured by a previously calibrated orifice meter in the 12 in. pipe. The corresponding shunt line discharge was measured by the shunt line flow meter, which gave the total flow during each 10 minute run. The pipe discharge was changed by opening or closing a gate valve. The new discharge was measured, both for the pipe and the shunt line. Pipe

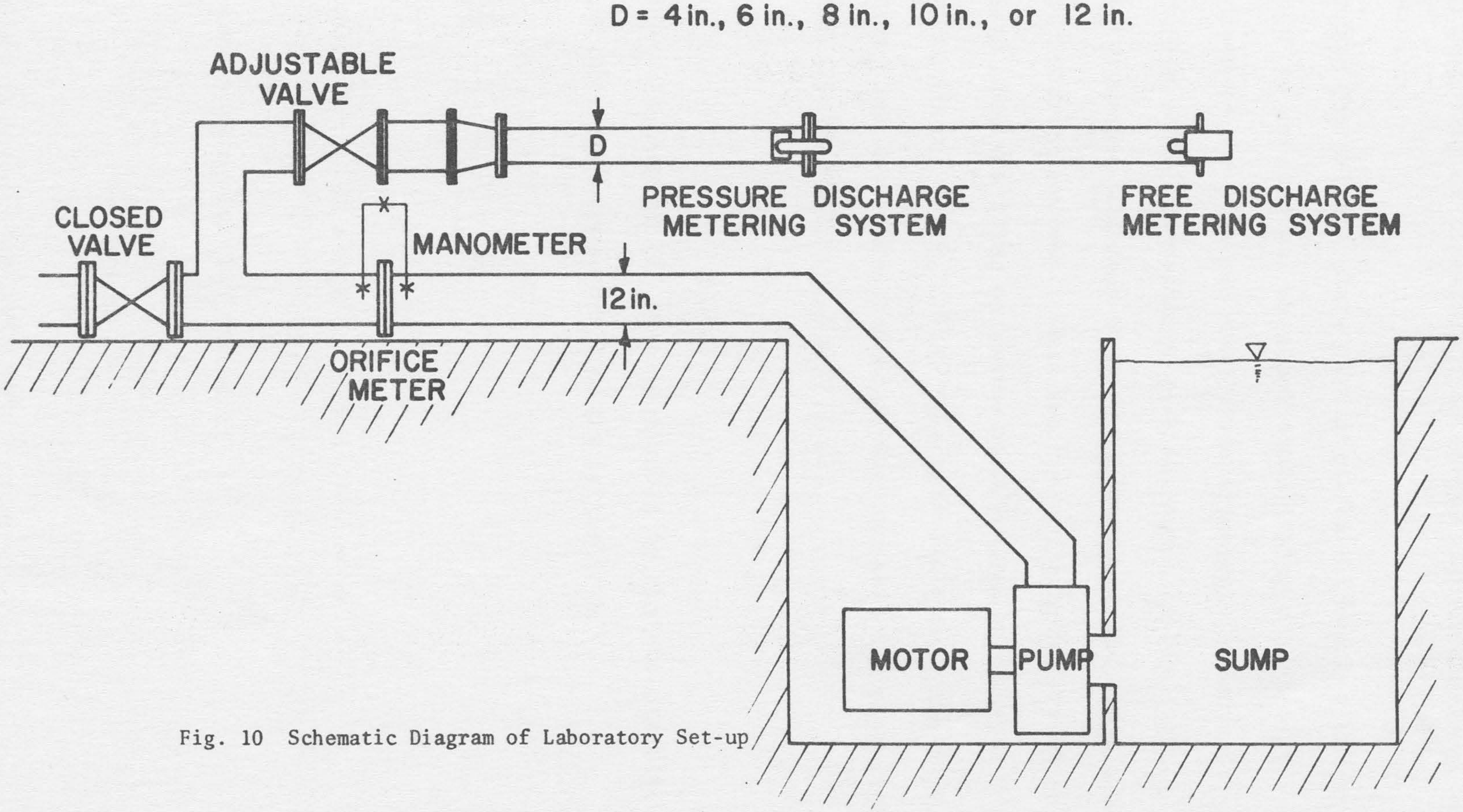

Fig. 10 Schematic Diagram of Laboratory Set-up

discharge versus shunt line discharge data were obtained for the range of flows from beginning of pipe-full flow to the maximum discharge the pump could deliver.

By replacing the orifice plate with one of a different side contraction, a new set of data was obtained establishing a different relationship between the pipe and shunt line discharges. Further changes in orifice plate contractions gave the graph of Fig. 11b.

The above procedure was used on both the pressure-discharge and free-discharge metering systems. Thus two sets of graphs were obtained.

The initial data was taken on a pipe with an inside diameter of 6.065 in. (nominal 6 in. pipe). After this data was taken, the 6 in. pipe was replaced and the entire procedure was repeated for pipe sizes of 4 in., 8 in., 10 in. (10.25 in.) and 12 in.

Results

As discussed in Chapter III it is desirable to express the pipe discharge-shunt line discharge relationship in the form

$$Q = cq \tag{14}$$

or

$$QT = cqT \tag{15}$$

The error caused by using Eq. 14 instead of

$$Q = b + Kq \tag{16}$$

can be determined from the laboratory data.

Using the data for an orifice size of $d = 1.91$ in., 6 in. pipe, assuming $q = 2.5$ gpm, we get,

$$Q = b + Kq = 1.38 \text{ gpm} + 238.66\ (2.5 \text{ gpm}) \qquad (17)$$

and

$$Q = cq = 238\ (2.5 \text{ gpm}) \qquad (18)$$

so

$$\%\ \text{Error} = \frac{(b + Kq) - cq}{(b + Kq)} \times 100\% \qquad (19)$$

$$= \frac{(1.38 + 238.66\ (2.5) - 238\ (2.5)}{1.38 + 238.66\ (2.5)} \times 100\% \qquad (20)$$

$$\%\ \text{Error} = 0.84\% \qquad (21)$$

Eq. 17 was obtained from linear regression analysis.

Although the error caused by the use of Eq. 14 was not always as small as for this orifice size, the error was always within ± 2%. The maximum error for each pipe size is given in Chapter VII. Thus the curves generated by the data were plotted in the form of Eq. 14 and the curves were forced to pass through the origin. These graphs are presented in Fig. 11 and Fig. 12.

For a given well discharge, the shunt line discharge will be determined by the degree of orifice contraction. Thus in a sense the shunt line discharge rate can be selected. The optimum value of this discharge is a function of accuracy of the turbine meter and head loss in the irrigation system. Below a flow rate of 1.5 gpm the meter accuracy decreases, but head loss, and therefore pumping costs decreases with decreasing flow rates. A shunt line flow rate of 3.0 gpm was selected

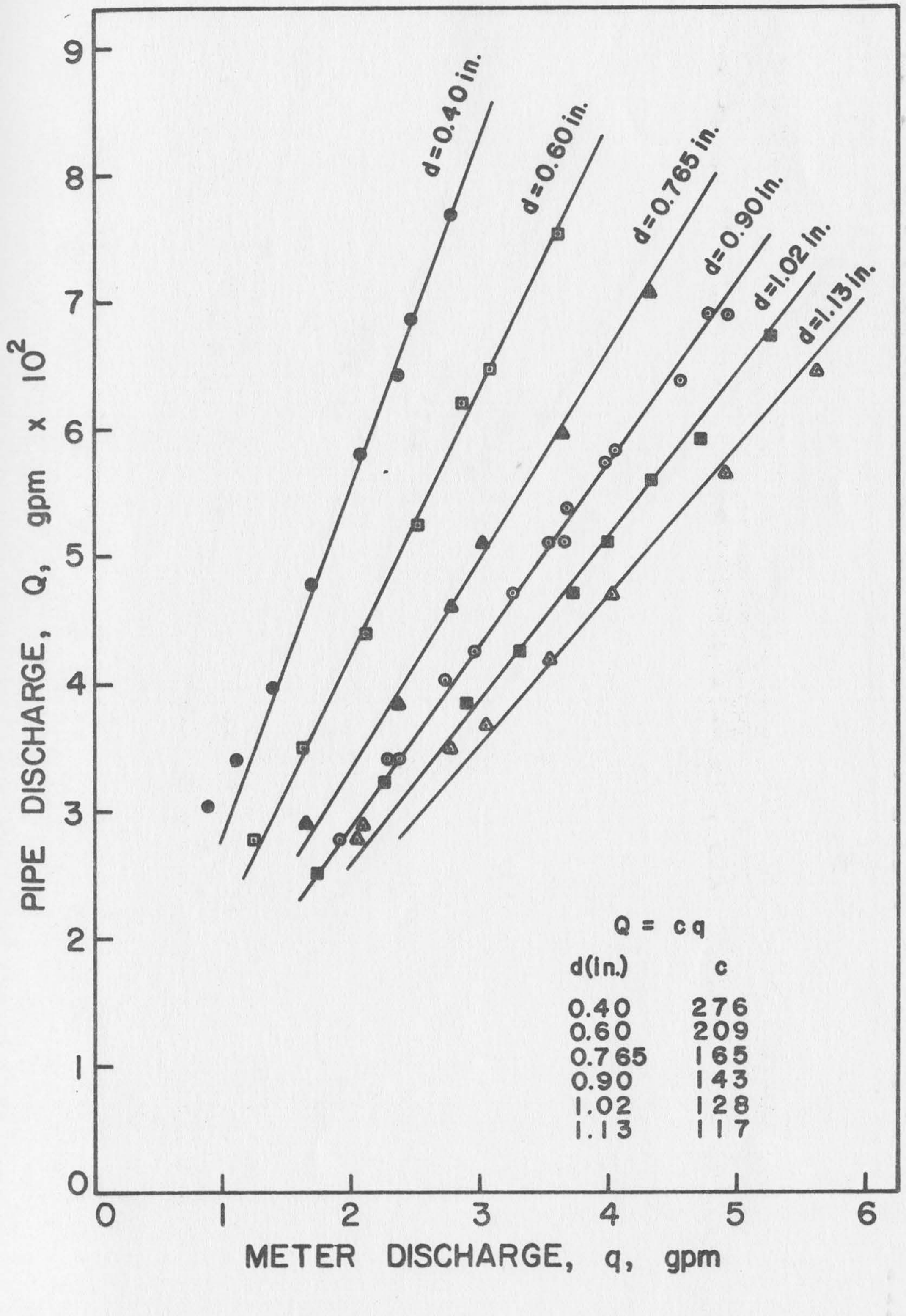

Fig. 11a Pipe Discharge vs. Shunt Line Discharge
4 in. pipe Free Discharge

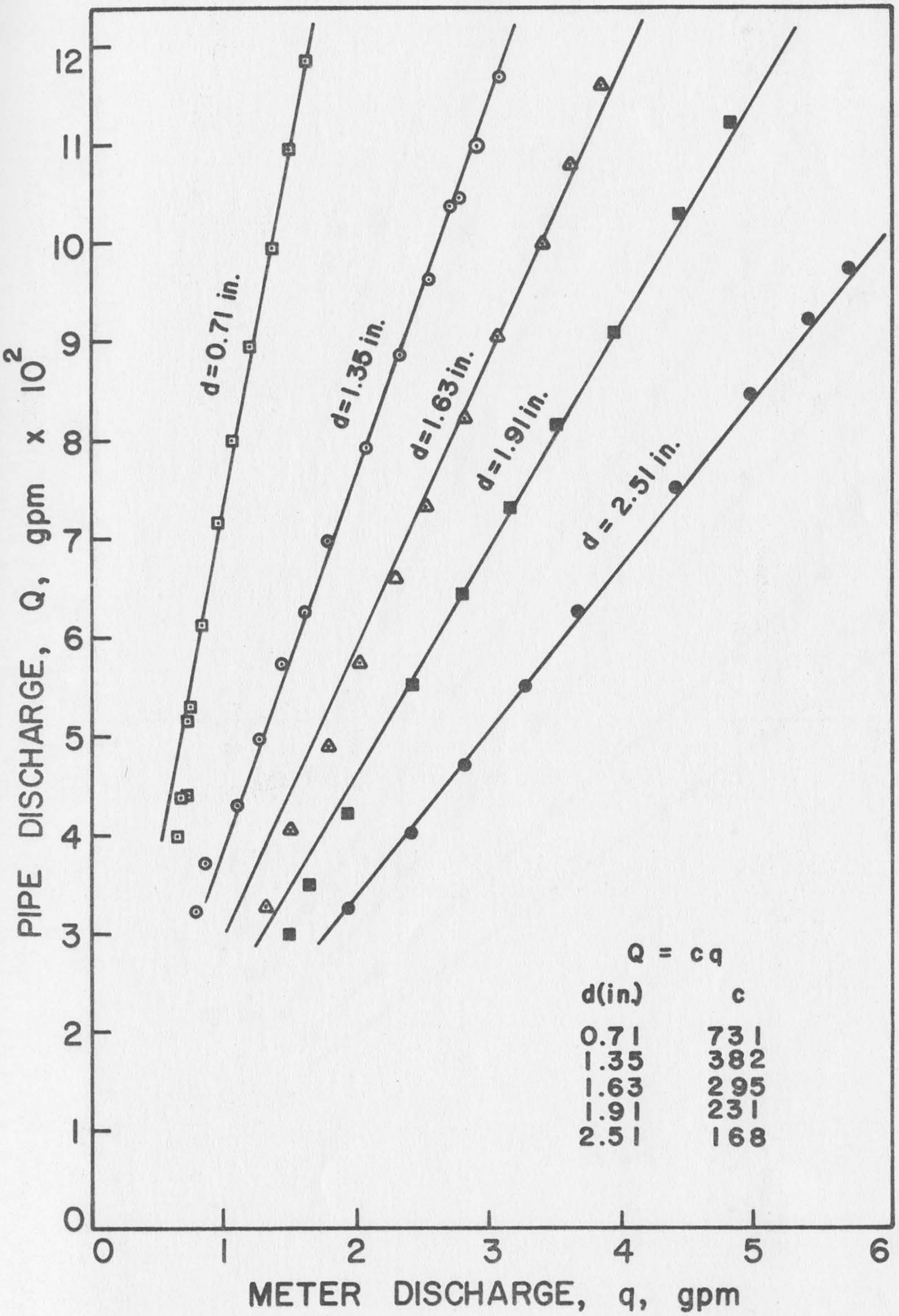

Fig. 11b Pipe Discharge vs. Shunt Line Discharge
6 in. pipe Free Discharge

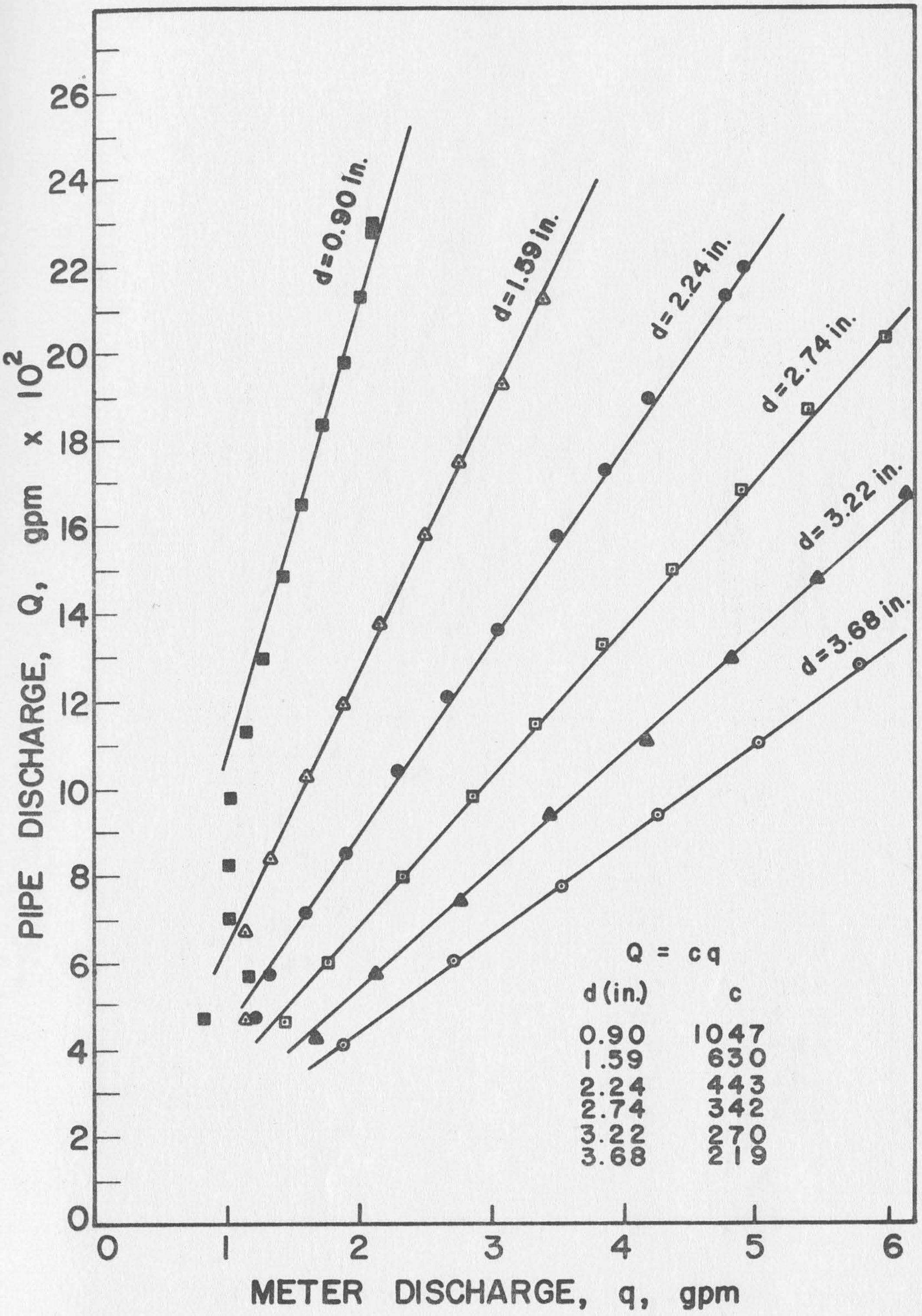

Fig. 11c Pipe Discharge vs. Shunt Line Discharge
8 in. pipe Free Discharge

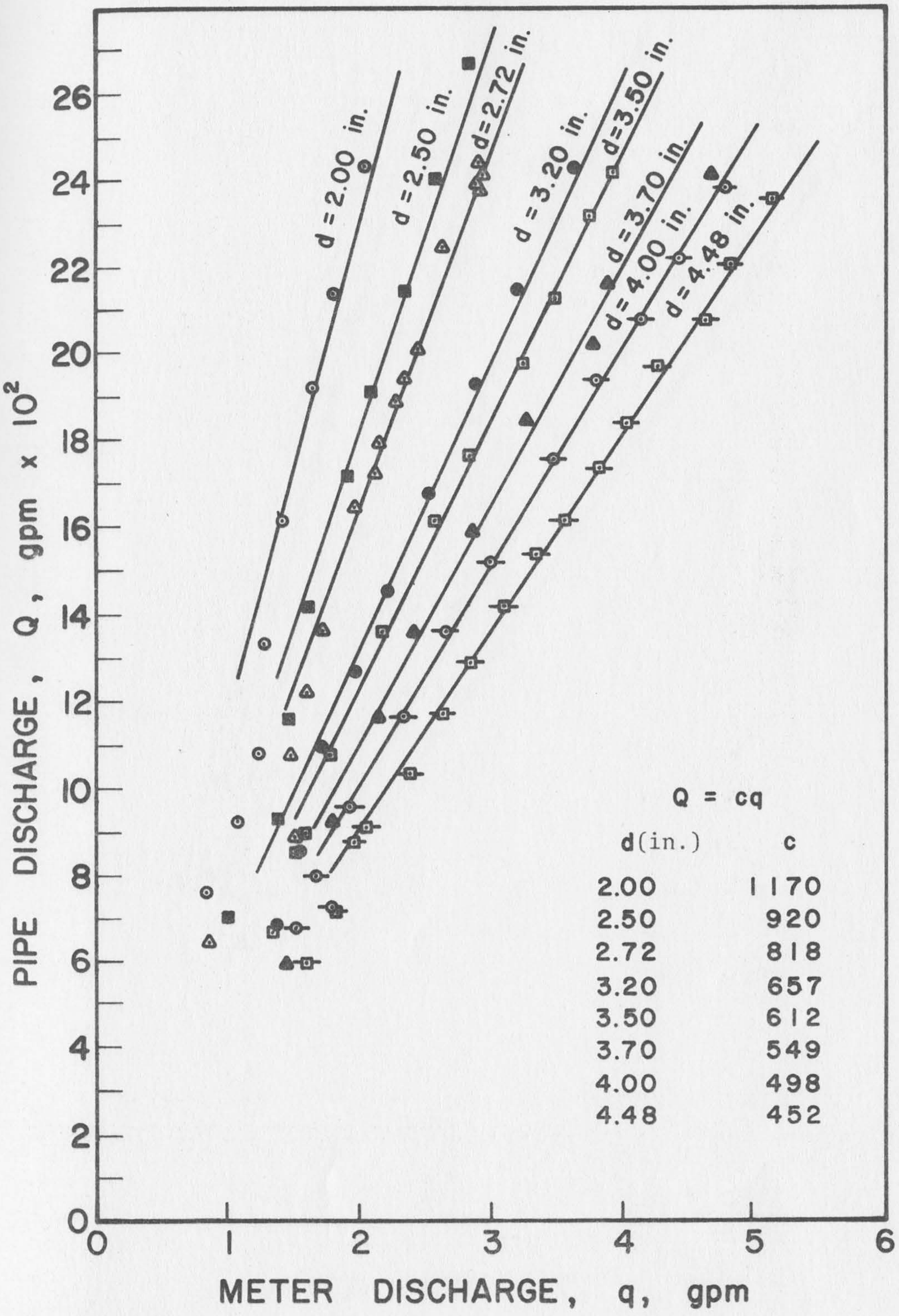

Fig. 11d Pipe vs Shunt Line Discharge,
10 in. pipe, Free Discharge

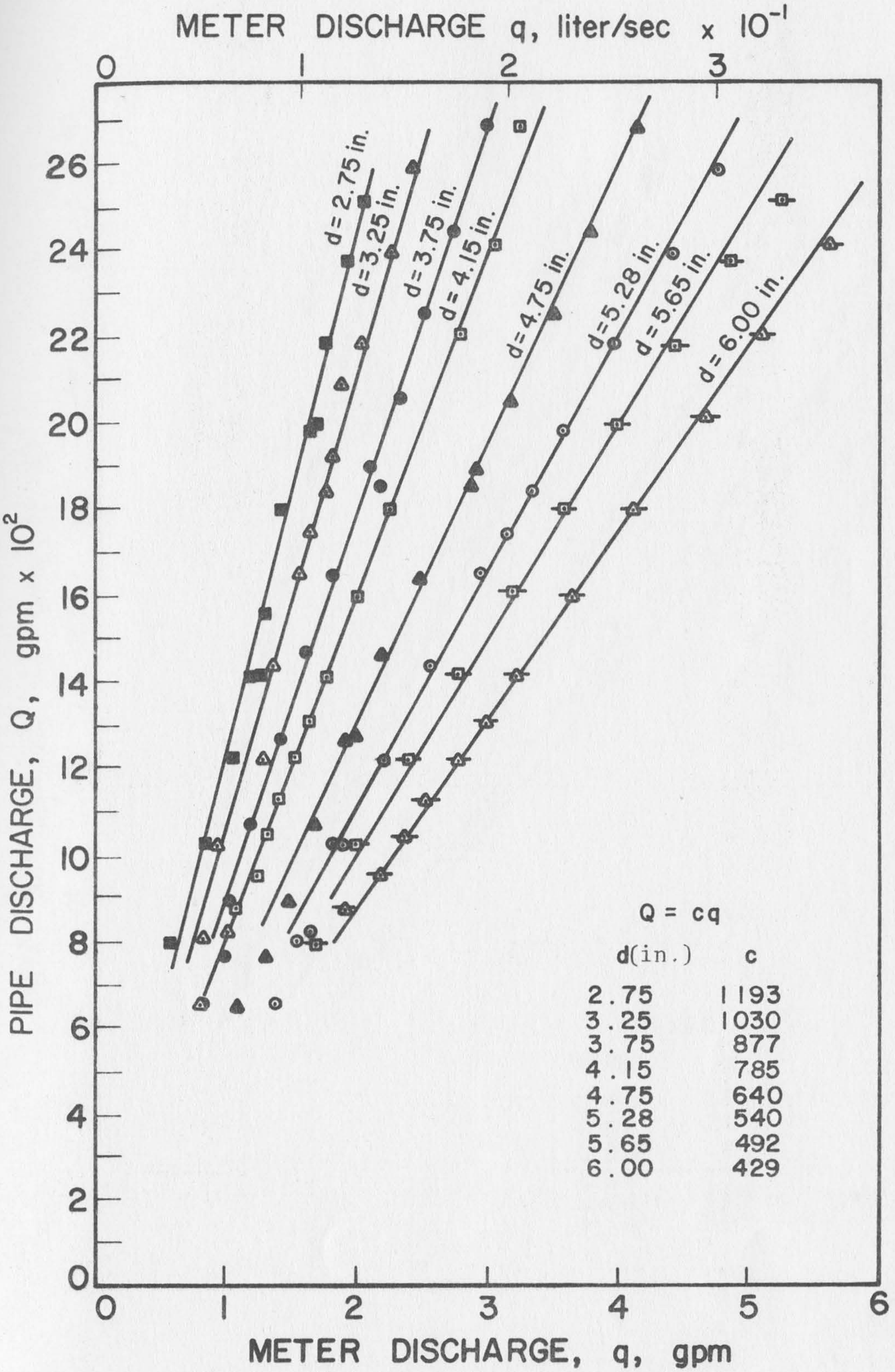

Q = cq

d(in.)	c
2.75	1193
3.25	1030
3.75	877
4.15	785
4.75	640
5.28	540
5.65	492
6.00	429

Fig. 11e Pipe vs Shunt Line Discharge,
12 in. pipe, Free Discharge

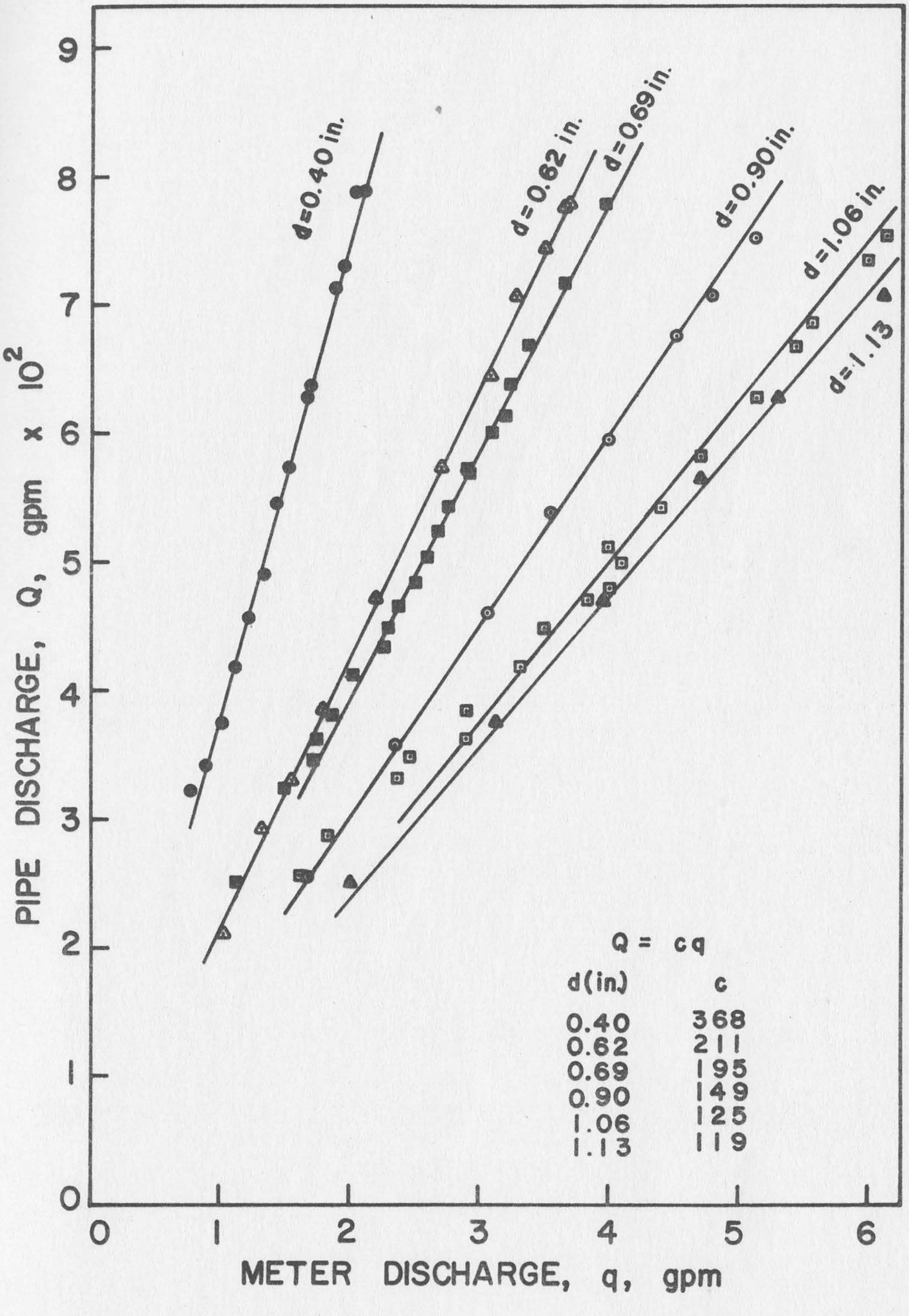

Fig. 12a Pipe Discharge vs. Shunt Line Discharge
4 in. pipe Pressure Discharge

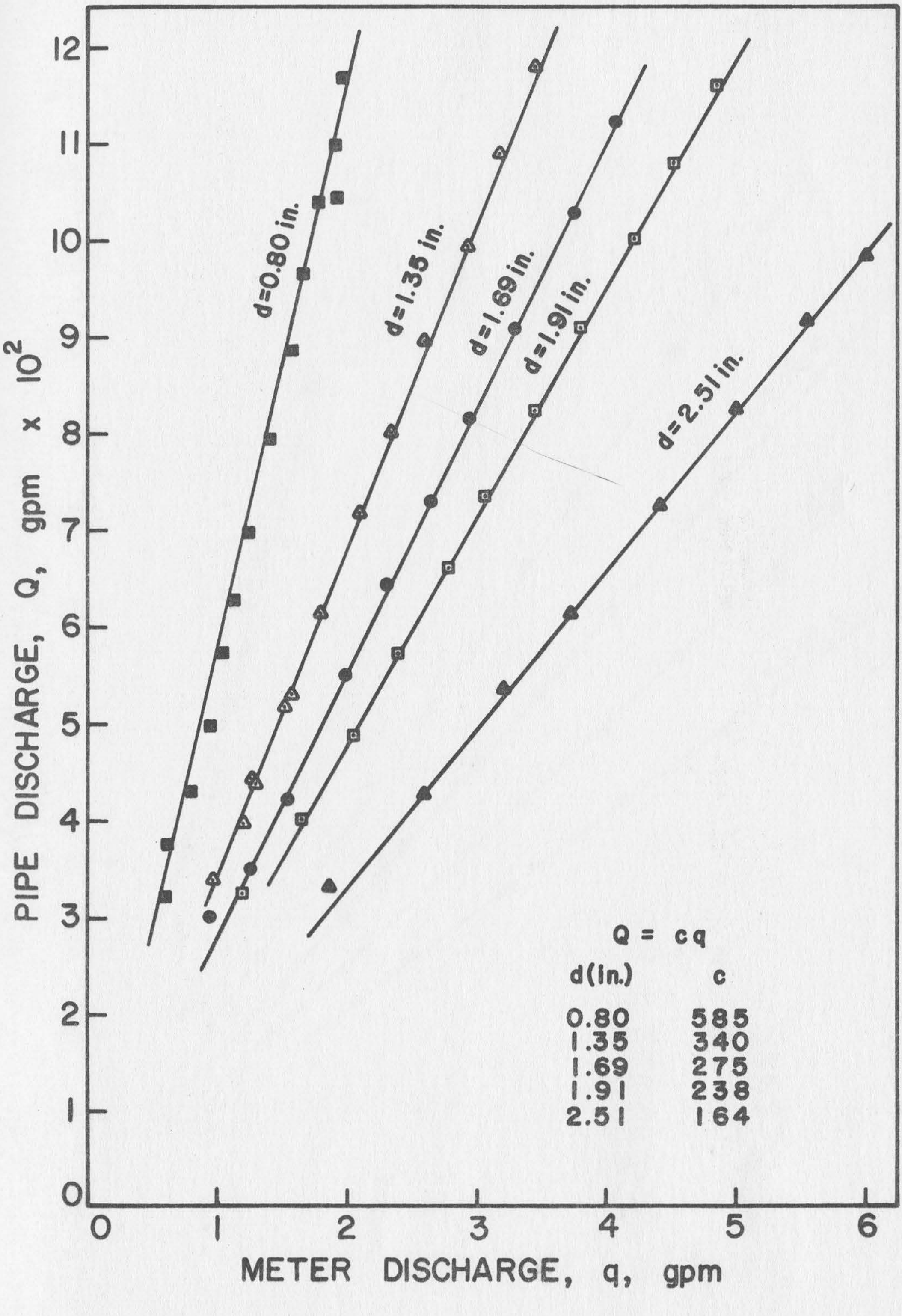

Fig. 12b Pipe Discharge vs. Shunt Line Discharge
6 in. pipe Pressure Discharge

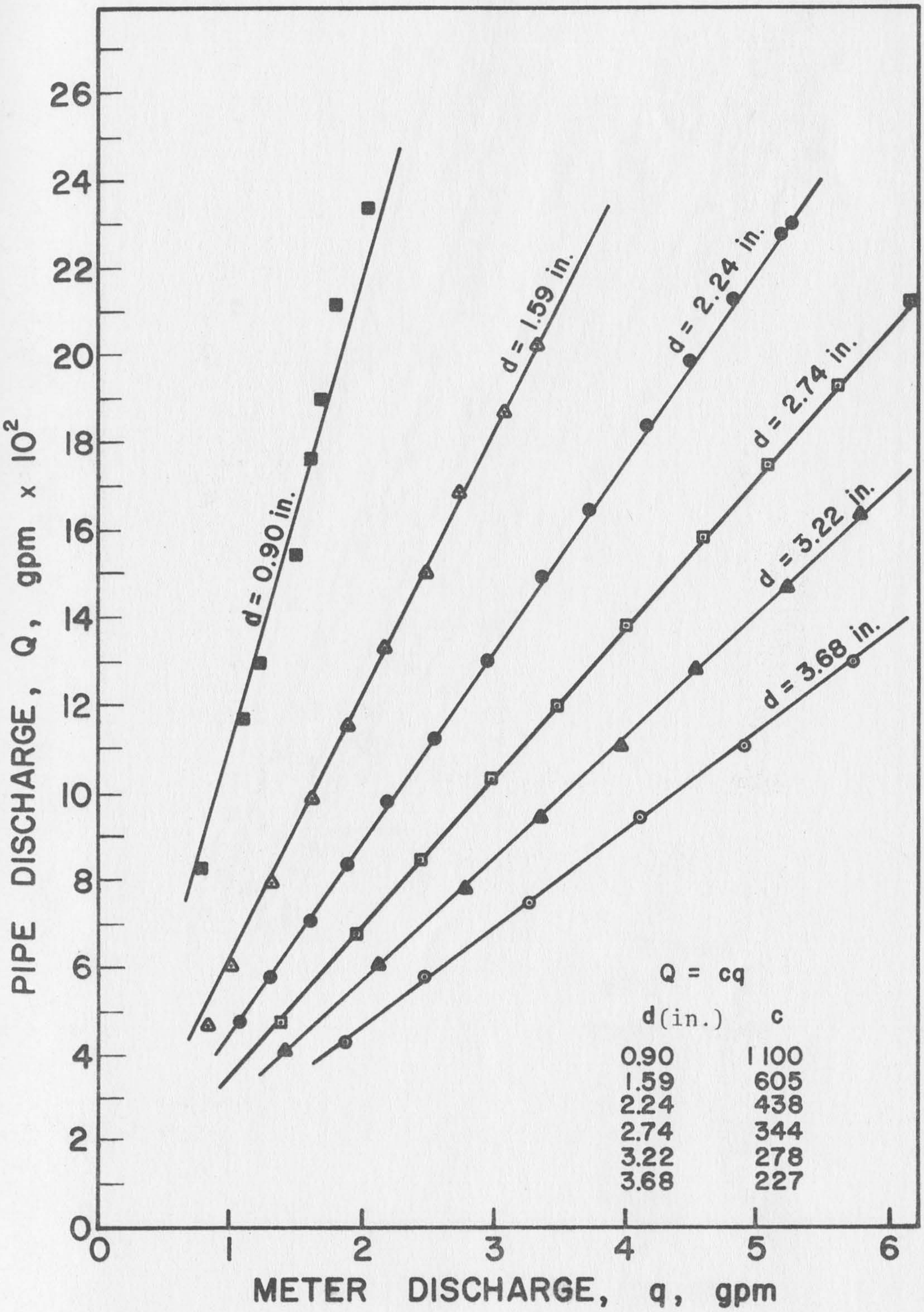

Fig. 12c Pipe vs Shunt Line Discharge,
8 in. pipe, Pressure Discharge

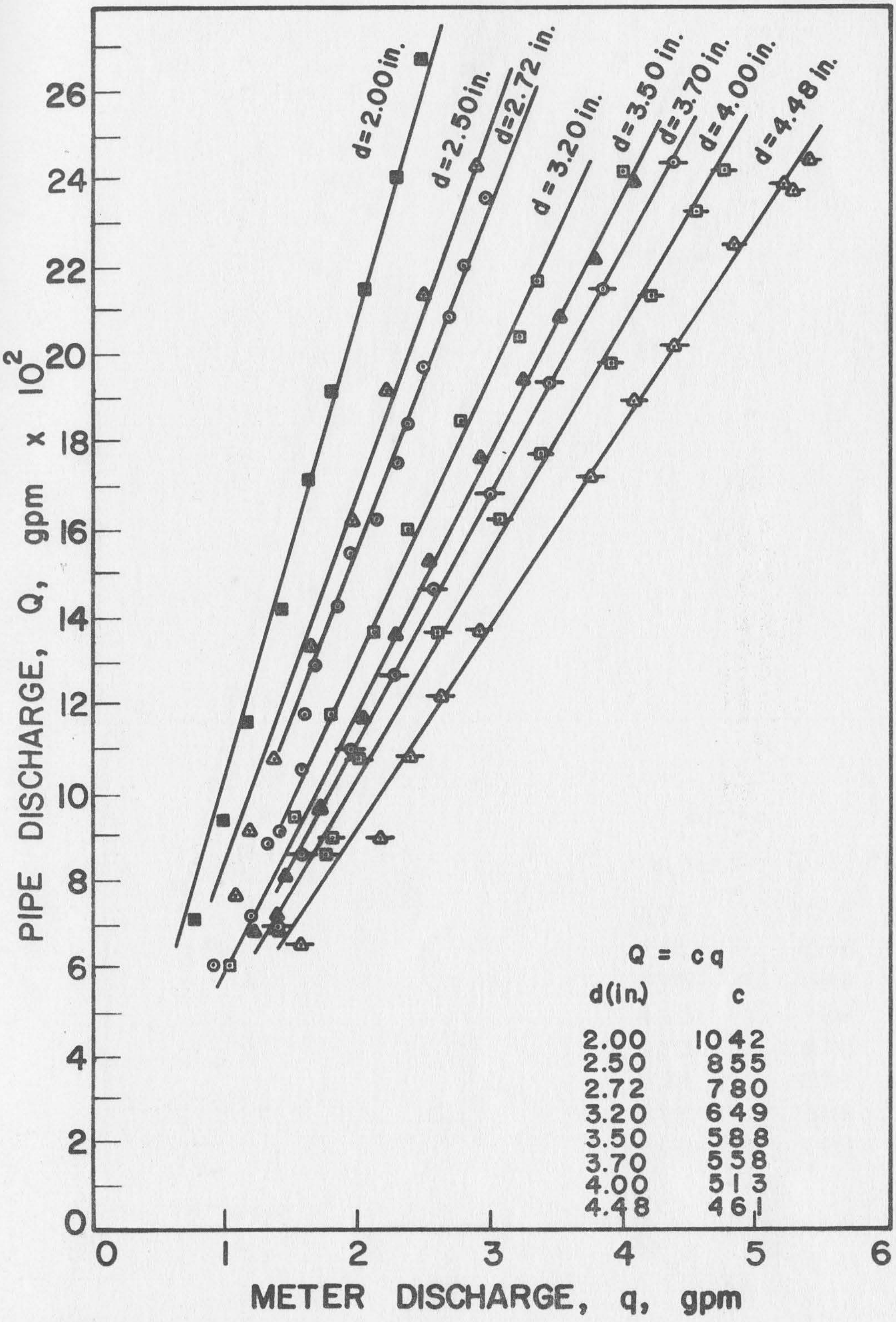

Fig. 12d Pipe Discharge vs. Shunt Line Discharge
10 in. pipe Pressure Discharge

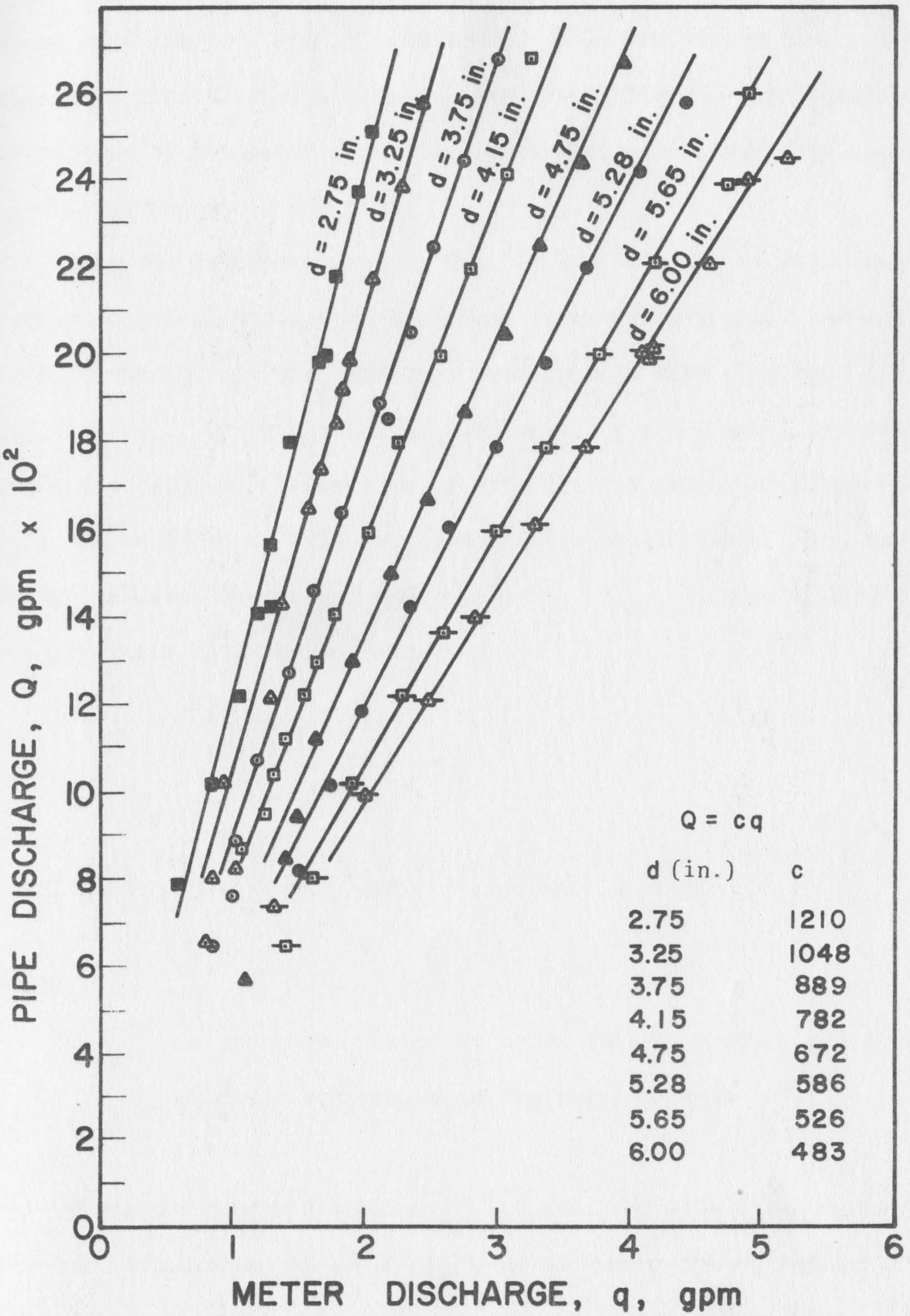

Fig. 12e Pipe vs Shunt Line Discharge,
12 in. pipe, Pressure Discharge

as best satisfying these requirements. However, a flow rate within the range of 2 gpm to 4 gpm is acceptable. Under no circumstances should the shunt line discharge rate be less than 1.5 gpm. The total head loss introduced by the metering system for a shunt line discharge equal 3.0 gpm is approximately 0.8 feet.

From the data presented in Fig. 11 and Fig. 12, relationships between orifice contraction and shunt line discharge, and between orifice contraction and discharge coefficients were developed (Fig. 13 and Fig. 14). Using the design discharge, $q = 3.0$ gpm , and the approximate discharge of the well to be metered, the proper orifice contraction can be found as well as the discharge coefficient. Thus the total volume of water discharged from the well, V_{well} , can be determined without field calibration from

$$QT = cqT \tag{22}$$

or

$$V_{well} = c\ V_{shunt} \tag{23}$$

where

V_{shunt} is the total volume of water passing through the shunt line which is registered on the turbine meter

Using the design discharge of 3.0 gpm, the pipe size, and approximate well discharge, it is possible to determine the relationships needed to apply this metering system to any size irrigation pipe from 4 in. to 12 in. (Fig. 15 and Fig. 16).

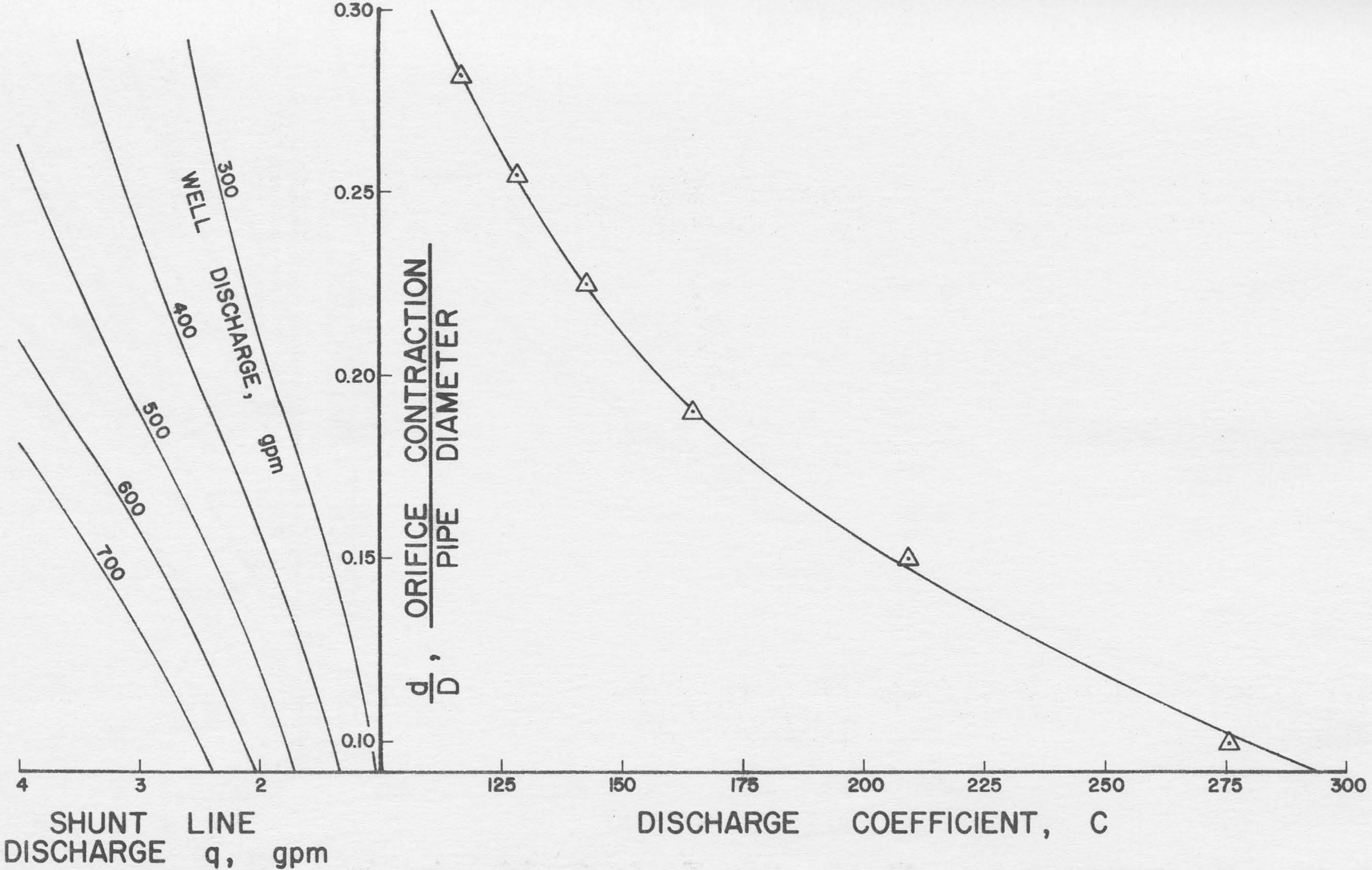

Fig. 13a Relationship of Orifice Size to Shunt Line Discharge and Discharge Coefficient, 4 in. pipe, Free Discharge

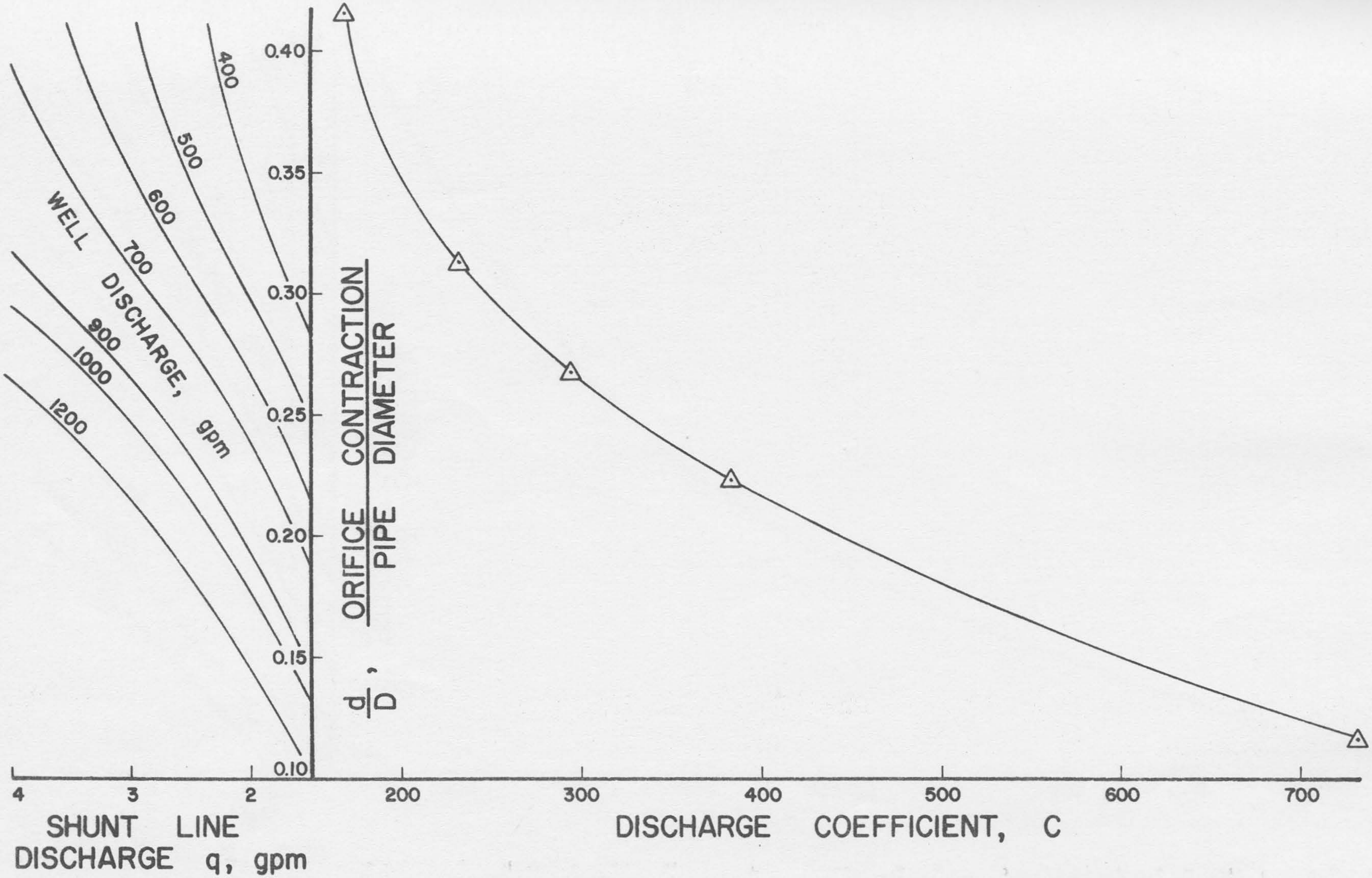

Fig. 13b Relationship of Orifice Size to Shunt Line Discharge and Discharge Coefficients, 6 in. pipe, Free Discharge

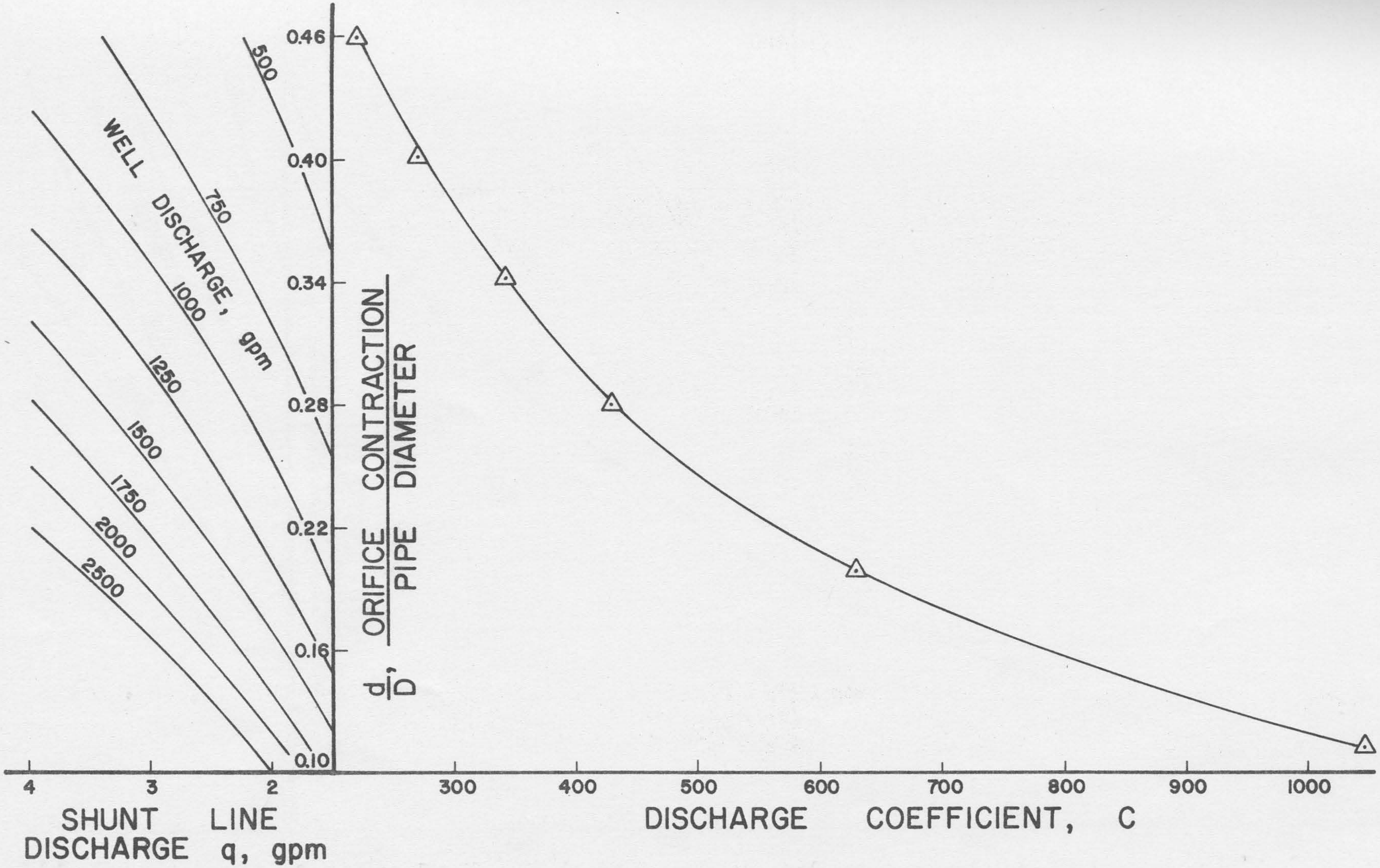

Fig. 13c Relationship of Orifice Size to Shunt Line Discharge and Discharge Coefficient, 8 in. pipe, Free Discharge

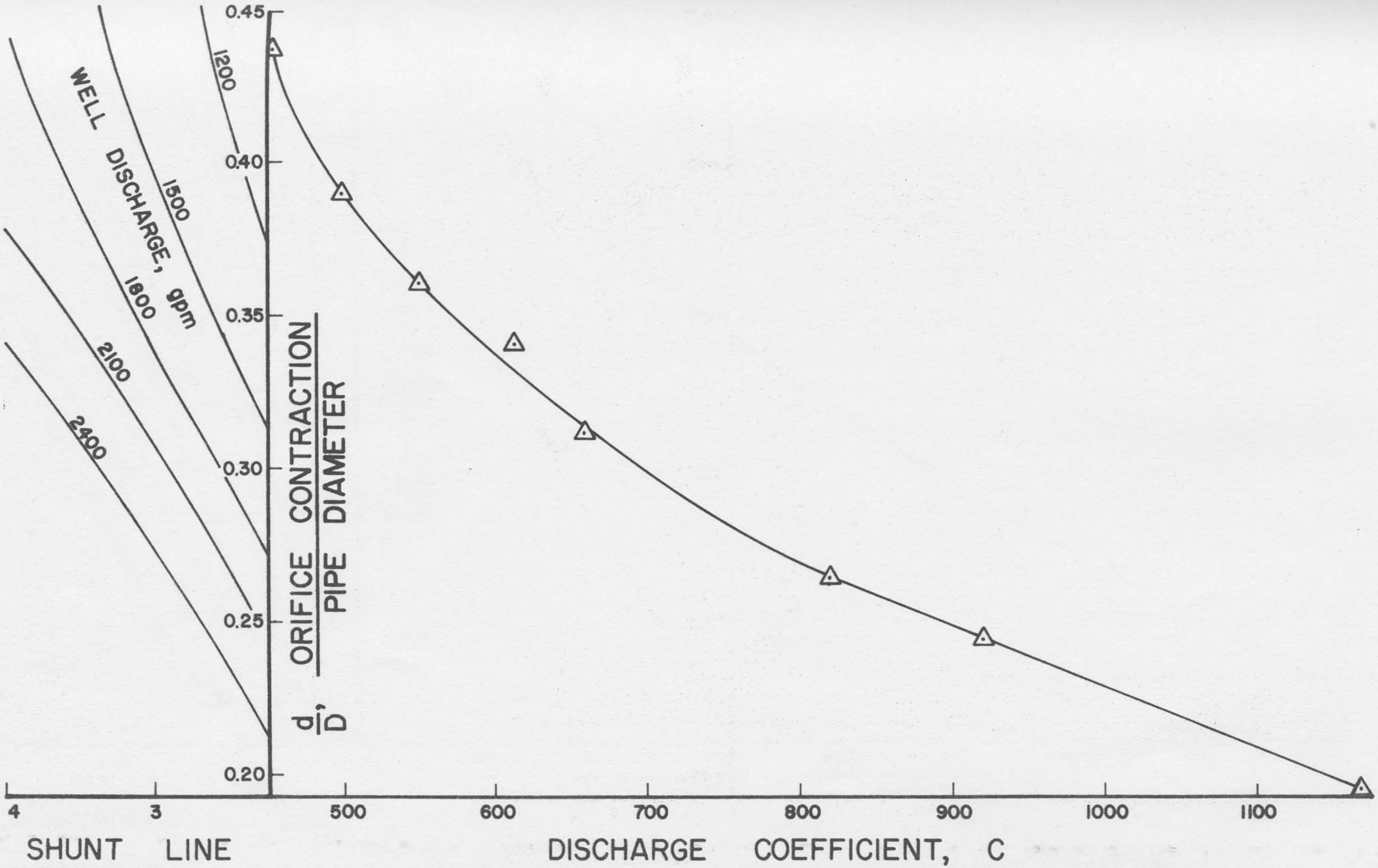

Fig. 13d Relationship of Orifice Size to Shunt Line Discharge and Discharge Coefficient, 10 in. pipe, Free Discharge

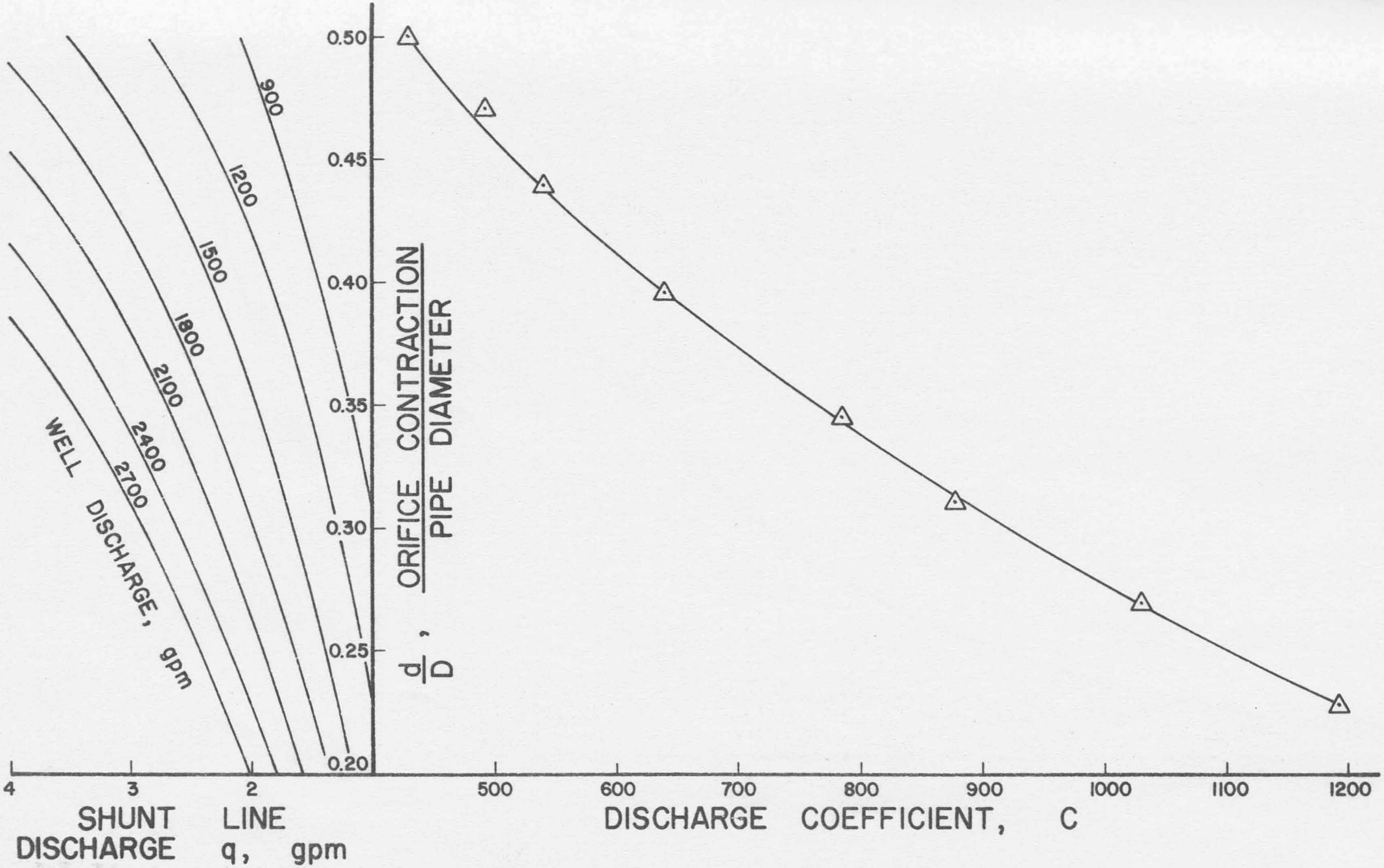

Fig. 13e Relationship of Orifice Size to Shunt Line Discharge and Discharge Coefficient, 12 in. pipe, Free Discharge

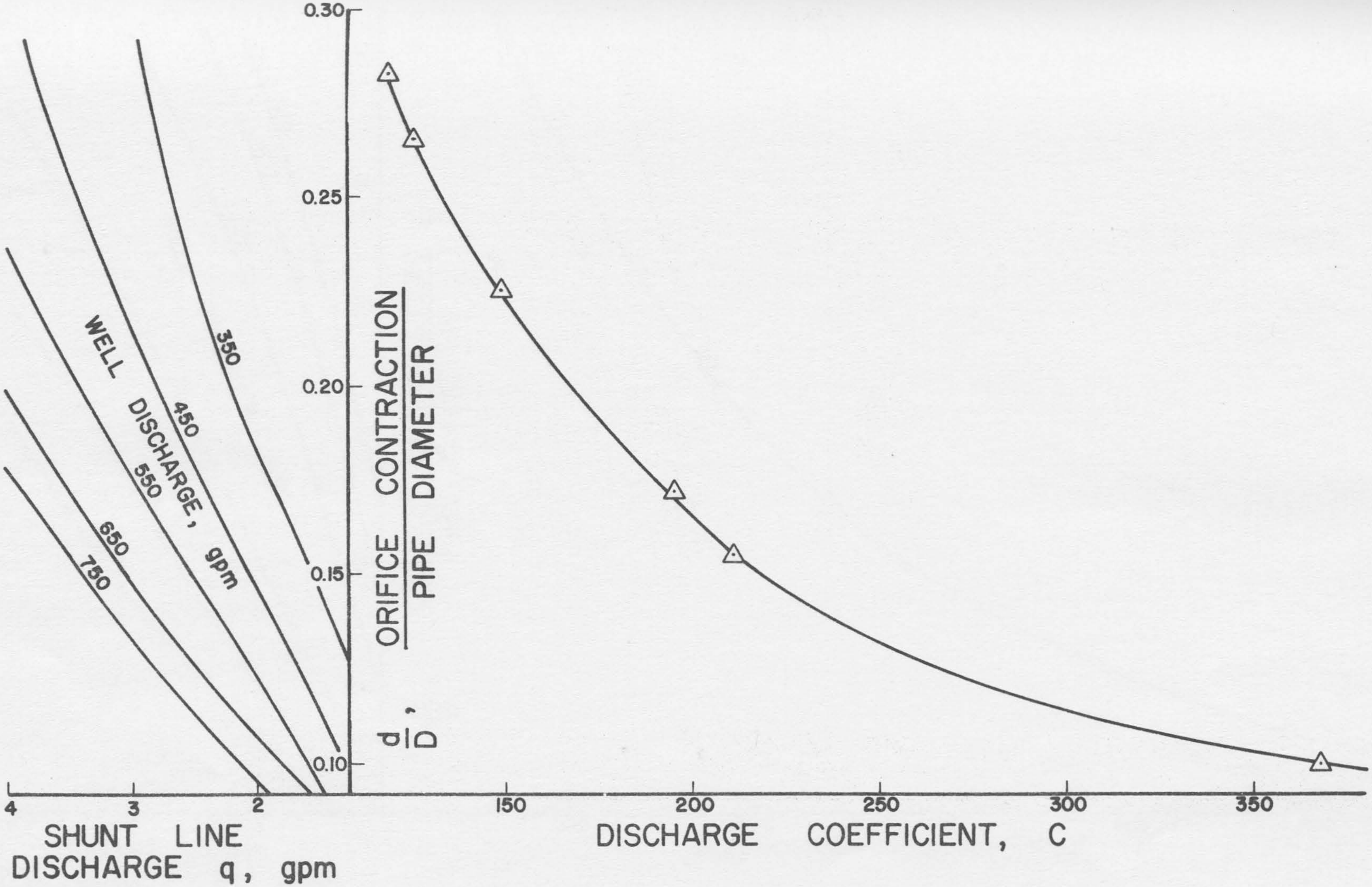

Fig. 14a Relationship of Orifice Size to Shunt Line Discharge and Discharge Coefficient, 4 in. pipe, Pressure Discharge

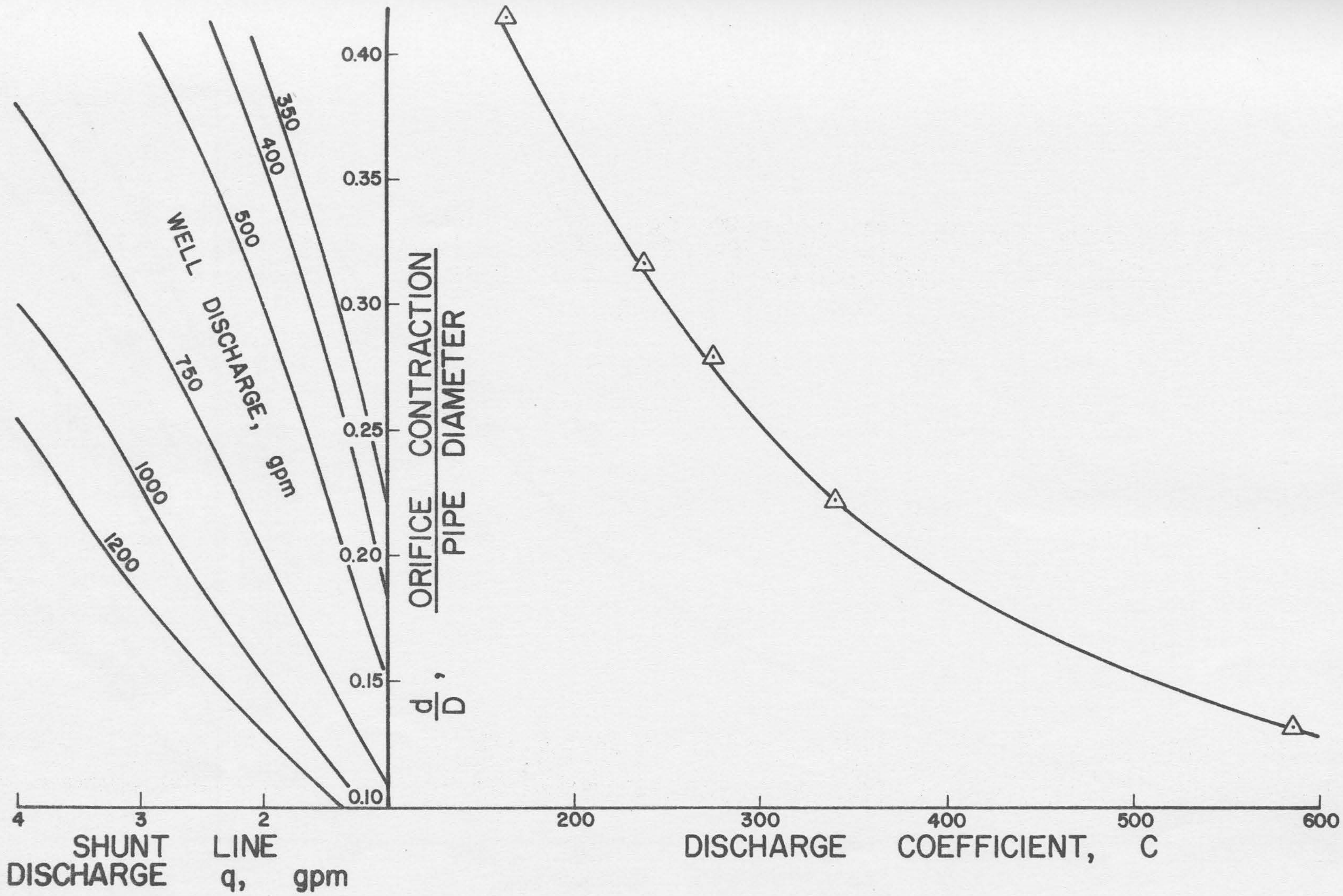

Fig. 14b Relationship of Orifice Size to Shunt Line Discharge and Discharge Coefficient, 6 in. pipe, Pressure Discharge

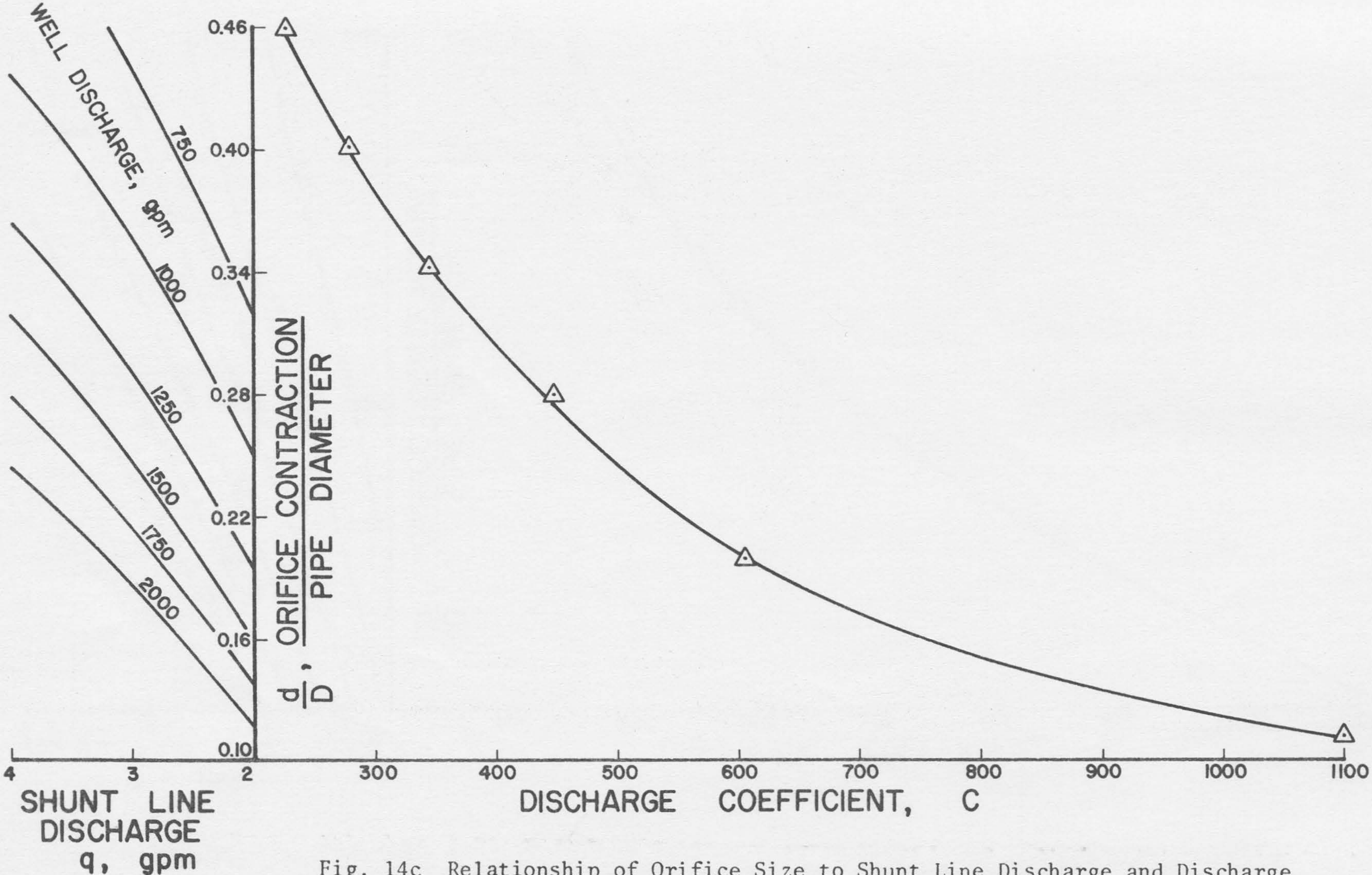

Fig. 14c Relationship of Orifice Size to Shunt Line Discharge and Discharge Coefficient, 8 in. pipe, Pressure Discharge

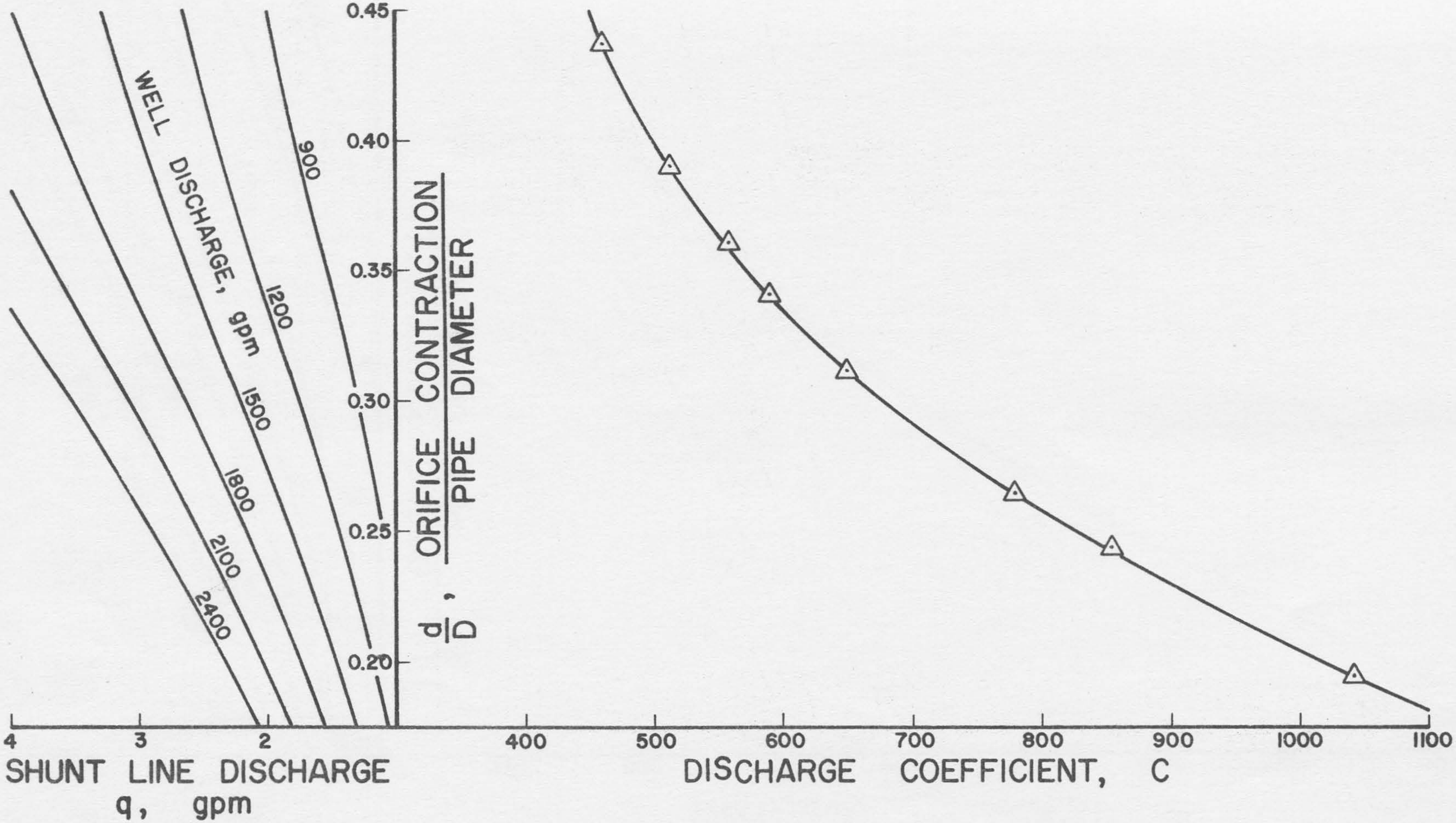

Fig. 14d Relationship of Orifice Size to Shunt Line Discharge and Discharge Coefficient, 10 in. pipe, Pressure Discharge

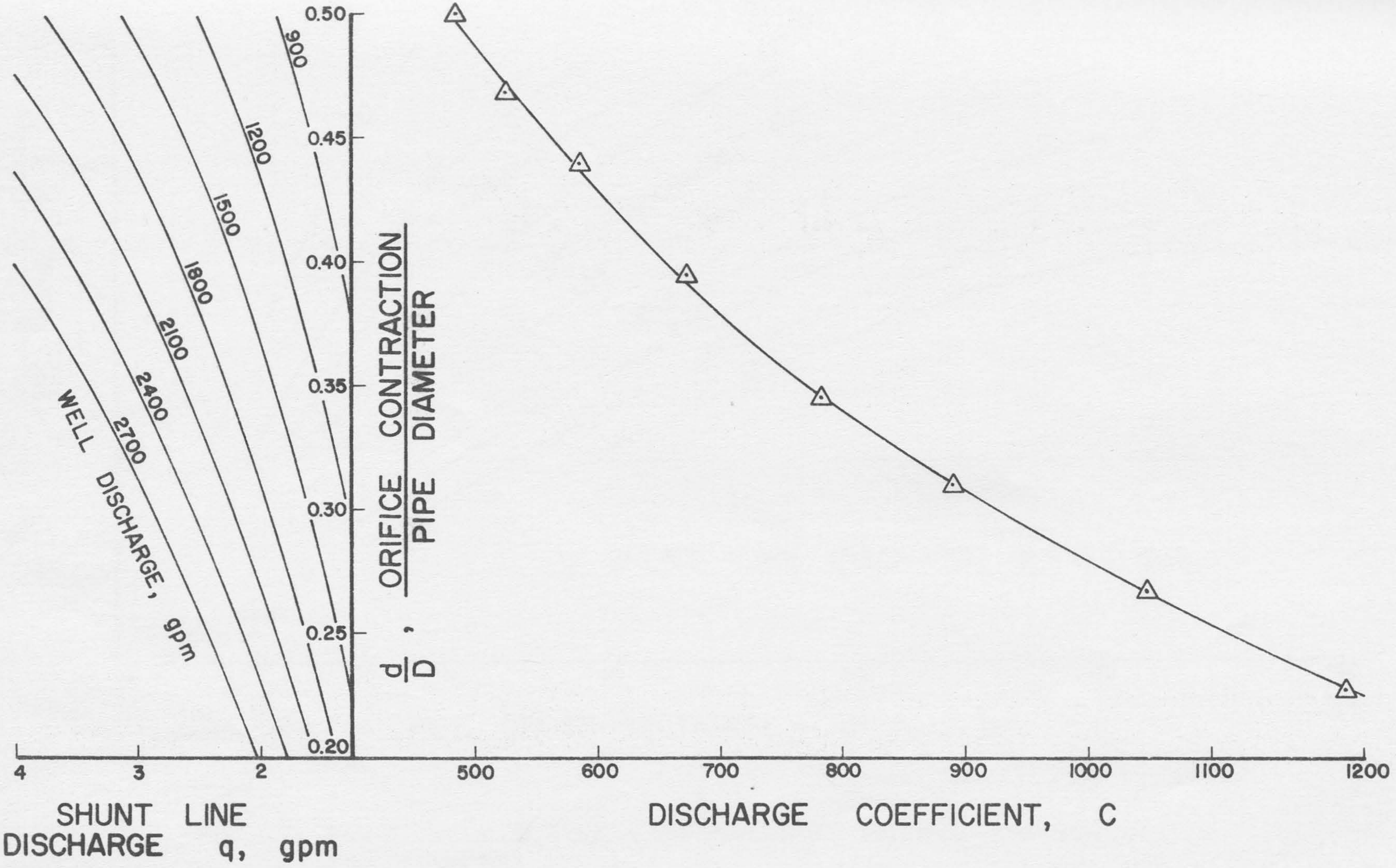

Fig. 14e Relationship of Orifice Size to Shunt Line Discharge and Discharge Coefficient, 12 in. pipe, Pressure Discharge

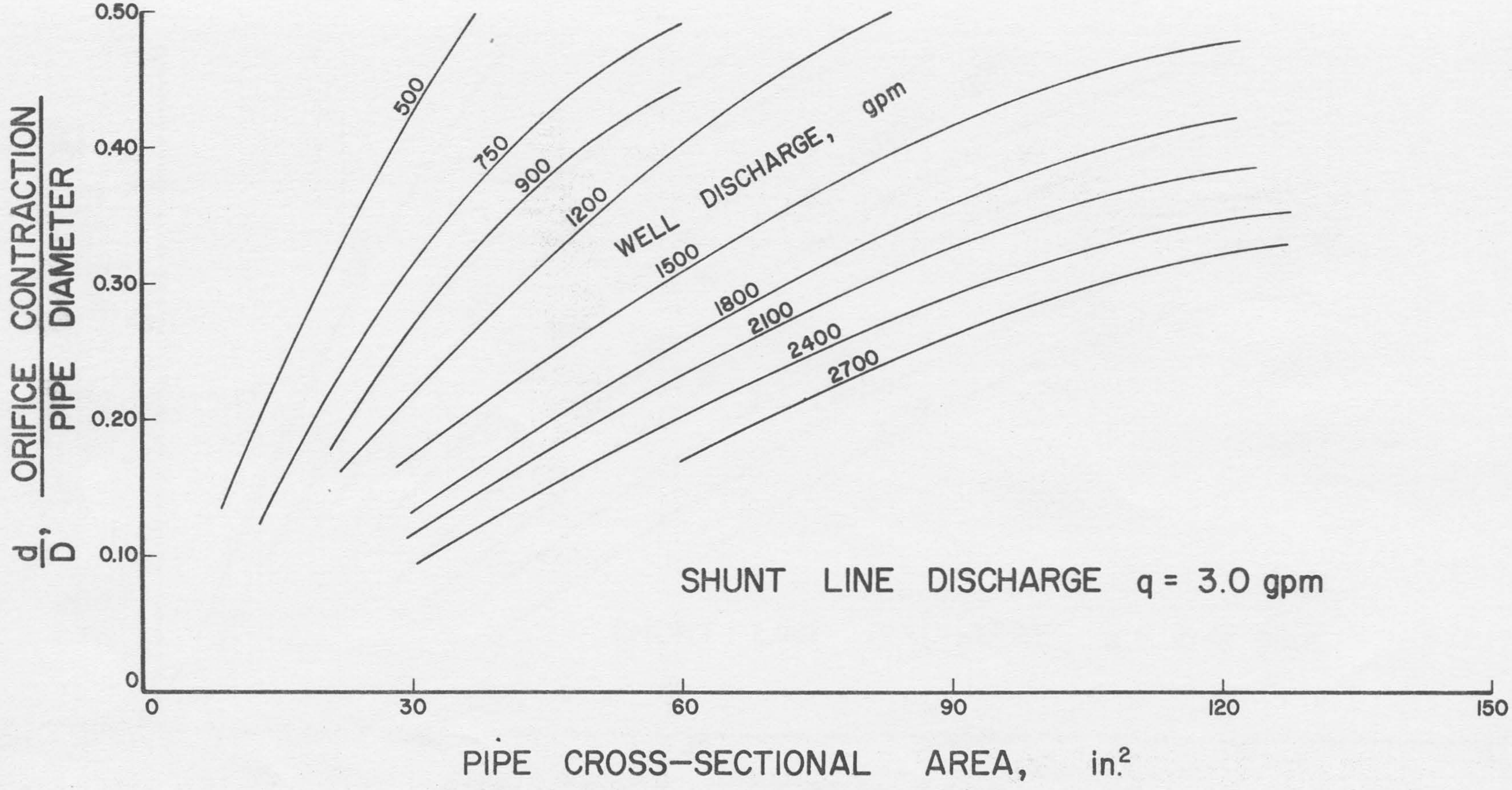

Fig. 15a Determination of Orifice Contraction for Untested Pipe Sizes, Free Discharge

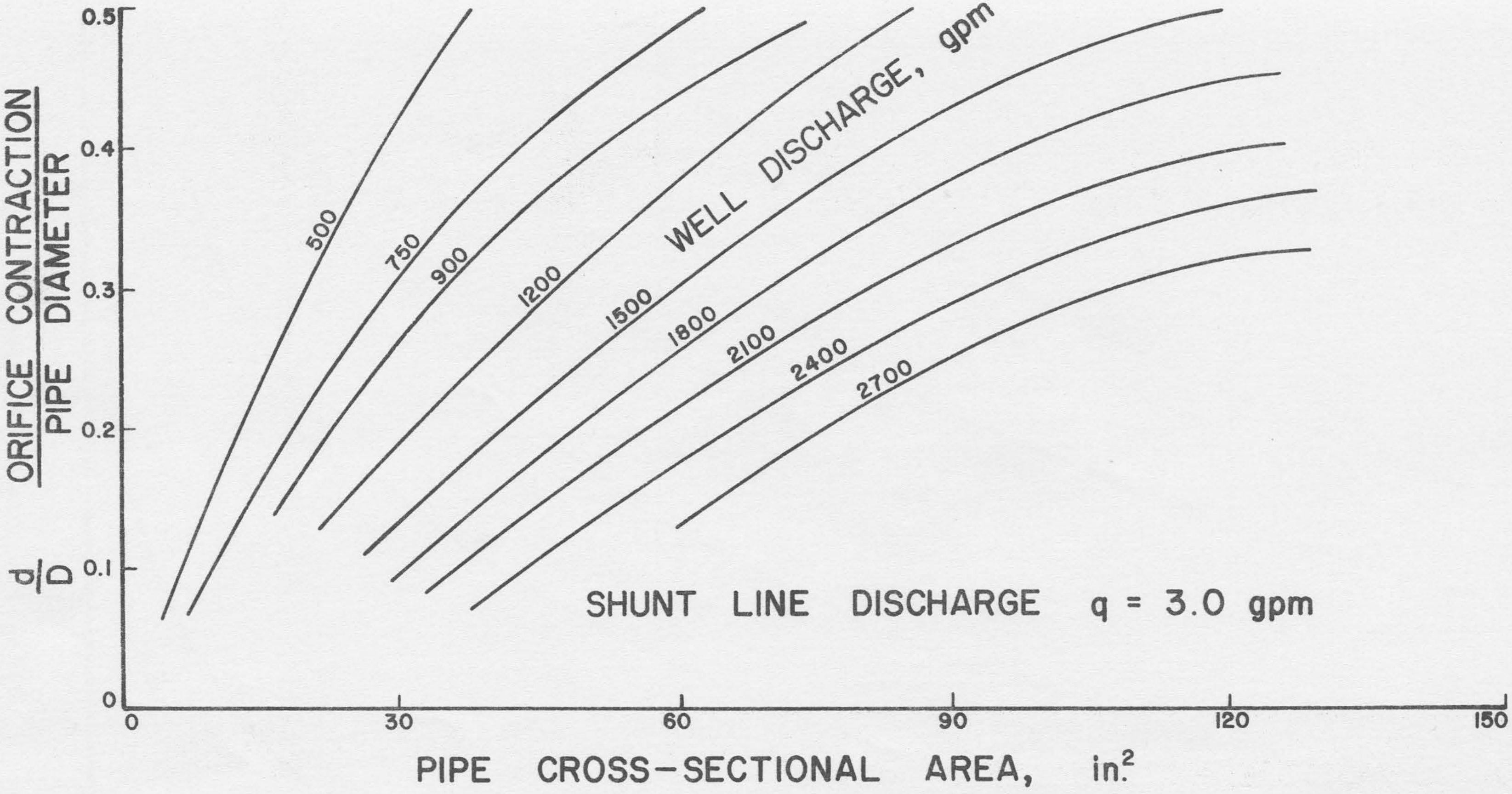

Fig. 15b Determination of Orifice Contraction for Untested Pipe Sizes, Pressure Discharge

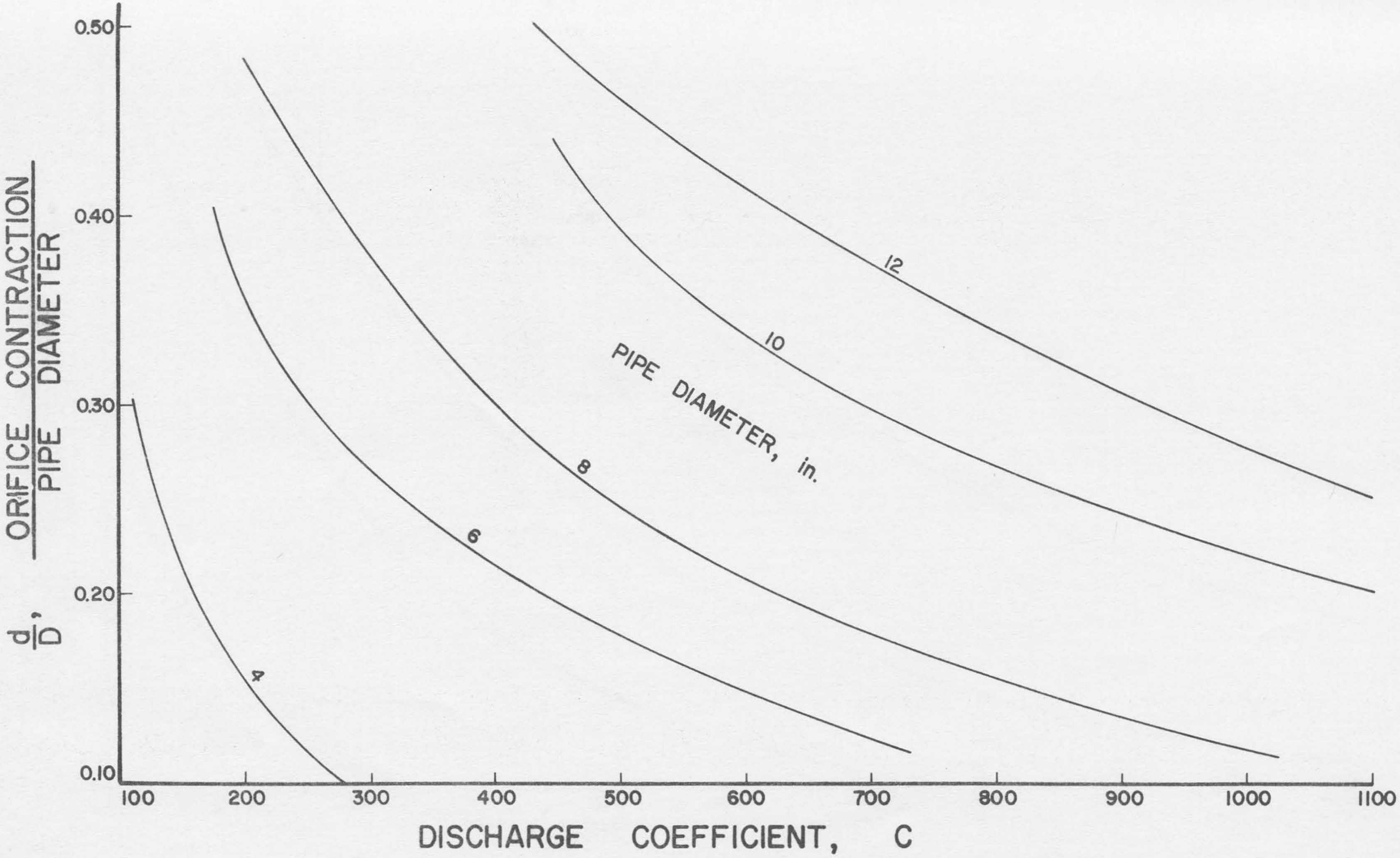

Fig. 16a Determination of Discharge Coefficients for Untested Pipe Sizes, Free Discharge

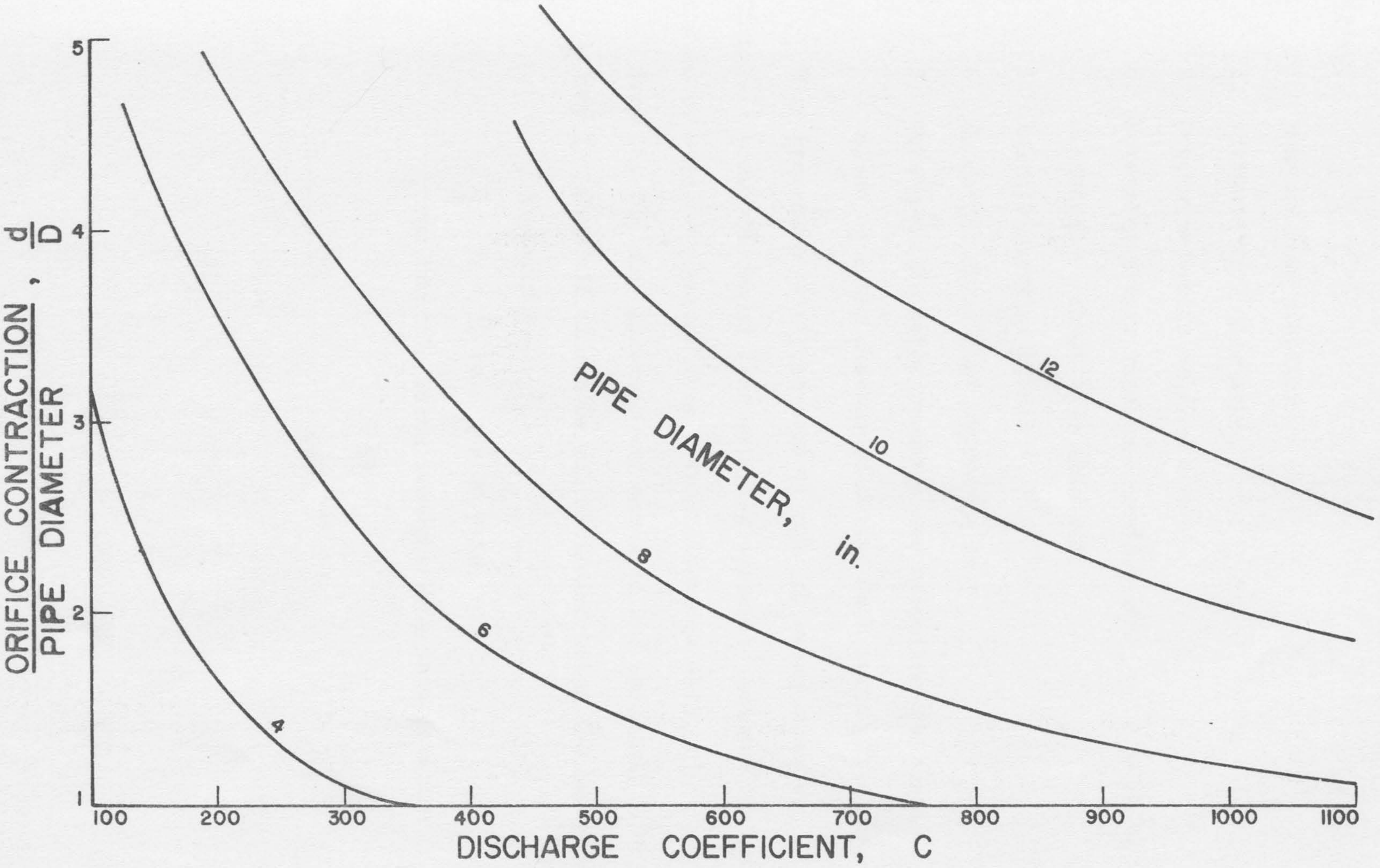

Fig. 16b Determination of Discharge Coefficients for Untested Pipe Sizes, Pressure Discharge

The procedure for the use of this metering system is outlined below.

1. Measure pipe diameter
2. Estimate well discharge
3. Determine proper orifice size
4. Determine proper discharge coefficient, c , relating well discharge to shunt line discharge
5. Install metering system
6. Check the shunt line discharge rate
7. Make periodic meter readings and calculate the total volume of water discharged during each period from the well.

This procedure is illustrated by the following examples.

Example 1 - Use the shunt line metering system to measure the total volume of water discharged from a free discharge well.

Step 1 - The pipe diameter was measured and was equal 6.06 in.

Step 2 - The well discharge was estimated using the method of Appendix A.

$Y = 12$ in. $X = 30.4$ in.

From Table 3, using straight line interpolation

X in.	Q gpm
30	914
30.4	
32	975

$$Q = \frac{30.4 - 30}{32 - 30} (975 - 914) + 914 \tag{24}$$

$$Q = 926 \text{ gpm} \tag{25}$$

Step 3 - Determine proper orifice size from Fig. 13b . Using the standard shunt line discharge, $q = 3.0$ gpm, and $Q = 926$ gpm

$$\frac{d}{D} = 0.261 \qquad d = (0.261)\ 6.065 \text{ in.} \tag{26}$$

$$d = 1.58 \text{ in.} \tag{27}$$

Step 4 - Determine proper discharge coefficient, c , from Fig. 13b. Using $\frac{d}{D} = .261$

$$c = 302 \tag{28}$$

Step 5 - Install the metering system by the method described in Appendix B.

Step 6 - Check the shunt line discharge rate. The pump was turned on and a reading of the meter was made, and the time was also recorded. Five minutes later the meter was again read.

Meter Reading (gal x 10^{-1})	Time
1044.65	10:25:00
1046.10	10:30:00

The discharge rate was

$$q = \frac{1046.10 - 1044.65}{5} \times 10 = \frac{14.5}{5} = 2.90 \text{ gpm} \tag{29}$$

The discharge rate is well within the acceptable range of from 2.00 gpm to 4.0 gpm. If q had been outside of this range a new orifice size would have had to be installed.

Step 7 - Calculate the total volume of water discharged from the well.

The discharge relationship for this well is

$$V_{well} = c\, V_{shunt} \tag{30}$$

$$V_{well} = 302\, V_{shunt} \tag{31}$$

Well Discharge Record

Date	Meter Reading (gal)	V_{shunt} (gal)	c	V_{well} (gal x 10^3)	V_{well} (ac. ft.)
4-15	010761				
		10041	302	3032	9.30
5-1	020802				
		12812	302	3869	11.86
5-15	033614				
		15192	302	4587	14.07
6-1	048806				
		15591	302	4708	14.44
6-15	064397				
		16577	302	5004	15.34
7-1	080974				
		14390	302	4346	13.33
7-15	095264				
		16351	302	4938	15.14
8-1	111615				
		14512	302	4382	13.44
8-15	126127				
		12505	302	3778	11.58
9-1	138632				
Total		127871 gal	302	38617 gal x 10^3	118.45 ac. ft.

Example 2 - Use the shunt line metering system to measure the total water discharged from a pressure discharge well.

Step 1 - Measure the pipe diameter, D = 9.00 in.

Step 2 - Estimate the well discharge. The method of Appendix A is not applicable to a Pressure Discharge Well. A person experienced with well discharges can make a reasonable estimation from knowledge of capacities of different types of sprinkler systems. The capacity of the pump should also be considered. The approximate discharge capacity is sometimes stamped on the pump nameplate. The well discharge was estimated at 1000 gpm for the well in this example.

Step 3 - Determine proper orifice size. The area of the pipe is

$$A = \frac{\pi}{4} D^2 = \frac{3.14}{4} (9)^2 = 63.6 \text{ in.}^2 \qquad (32)$$

From Fig. 15b

$$\frac{d}{D} = 0.43 \qquad (33)$$

$$d = 0.43\ (9) = 3.87 \text{ in.} \qquad (34)$$

Step 4 - Determine the proper discharge coefficient.

From Fig. 16b

$$c = 355 \qquad (35)$$

Step 5 - Install the metering system. Use the procedure described in Appendix C.

Step 6 - Check the shunt line discharge rate. Turn on the pump and take meter readings at the beginning and end of a five minute period.

Meter Reading ($\text{gal} \times 10^{-1}$)	Time
20631.60	1:20:00
20633.11	1:25:00

$$q = \frac{20633.11 - 20631.60}{5} \times 10 = \frac{15.1}{5} = 3.02 \text{ gpm} \qquad (36)$$

which is within the prescribed range of shunt line discharges.

Step 7 - Calculate the total volume of water discharged from the well.

The discharge relationship for this well is

$$V_{\text{well}} = 355\ V_{\text{shunt}} \qquad (37)$$

Well Discharge Record

Date	Meter Reading (gal)	V_{shunt} (gal)	c	V_{well} (gal x 10^3)	V_{well} (ac. ft.)
4-15	026349				
		11310	355	4015	12.31
5-1	037659				
		13777	355	4892	15.00
5-15	051436				
		16511	355	5861	17.97
6-1	067947				
		16414	355	5826	17.86
6-15	084361				
		15557	355	5524	16.94
7-1	099818				
		15245	355	5414	16.60
7-15	115063				
		14864	355	5279	16.19
8-1	129927				
		12754	355	4526	13.88
8-15	142681				
		11586	355	4114	12.61
9-1	154267				
Total		127918 gal	355	45412 gal x 10^3	139.30 ac. ft.

Chapter V

SUPPLEMENTARY EXPERIMENTS

Supplemental experiments were conducted to study the effects of metering flows containing sediment and entrained air. The sediment was well graded between silts and coarse sands. The addition of the sediment to the water had serious effects on the metering system. The meter functioned well when the sediment concentration was below approximately 60 ppm. As concentrations increased, sediment began to accumulate in the shunt line and meter, reducing the open area of the pipe and causing a decrease in the shunt line discharge, eventually completely stopping the meter.

A sediment trap was installed in the shunt line upstream of the water meter to try to remove the excess sediment from the flow (Fig. 17). The sediment trap was tested on a discharge having a 200 ppm concentration and it prevented accumulation in the shunt line or meter. A small reduction in shunt line discharge occurred as a result of the increased head loss caused by the sediment trap. Use of this sediment trap would require additional laboratory work to determine a new discharge coefficient relating well discharge to shunt line discharge.

An air compressor capable of forcing 2 cfs of air into the pipeline was used to simulate the field condition of entrained air. The air entered the pipe through three pressure taps located three feet upstream of the metering system. Injecting 2 cfs of air into a water discharge of 3 cfs produced less than one percent increase in the discharge registered by the shunt line meter. Since such extreme test conditions

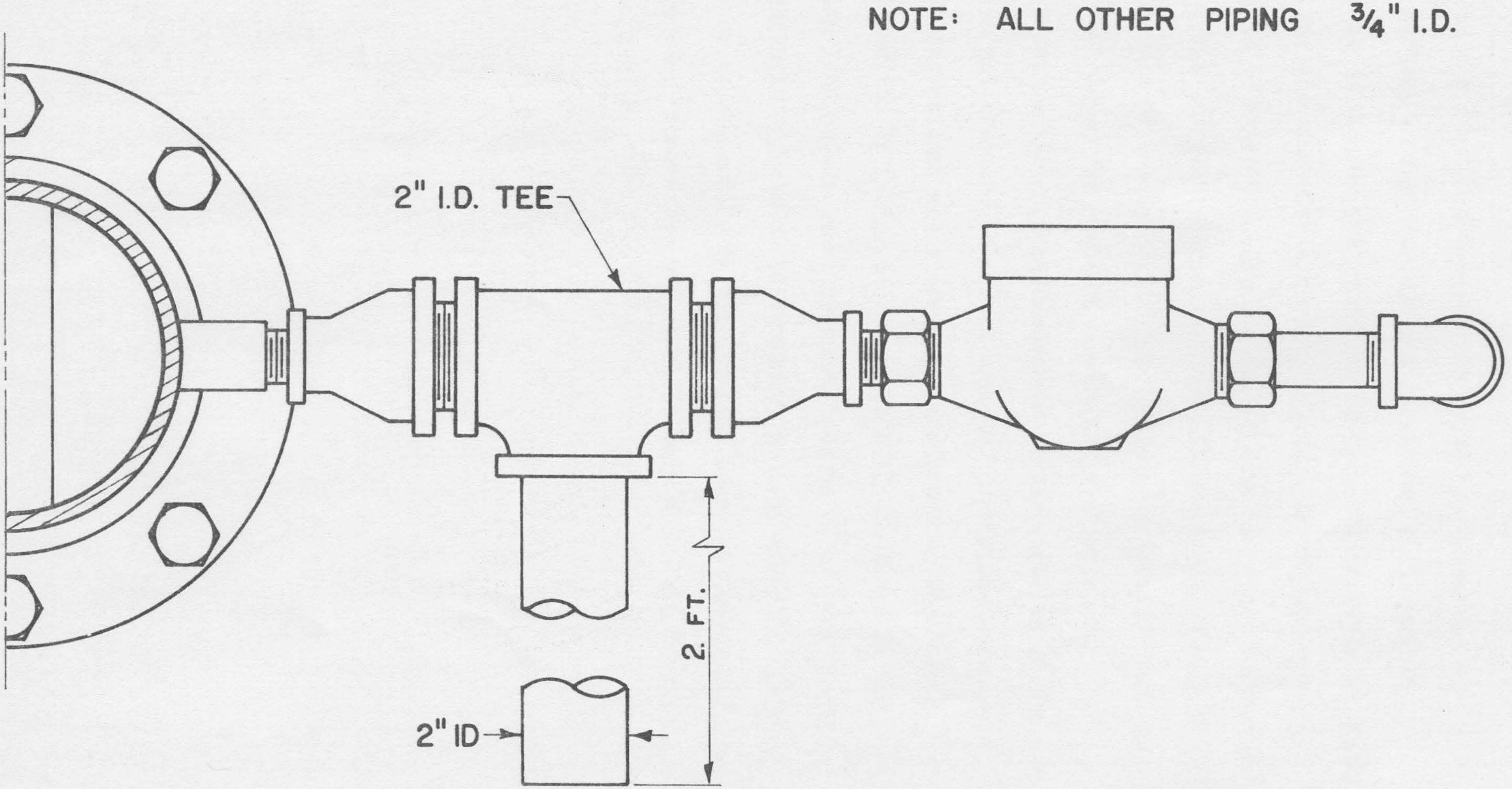

Fig. 17 Diagram of the Sediment Trap

produced only a small difference, the effect of entrained air which might be present in field situations is assumed to be neglible.

This study did not deal with the problem of intermittant pumping of water and air caused by excessive drawdown of the water table. This situation is of limited occurrence during most years in most areas, so that its effect on the accuracy of seasonal water measurement is usually small. No data on the effect of long periods of intermittant pumping of water and air on the metering system are available.

The effect of piping configurations on the accuracy of the metering system were not examined in the laboratory. Upstream obstructions (elbows, contractions, etc.) cause non-uniform flow conditions across the cross-section of the pipe. Replogle (7), concluded in his work with elbow-shunt line meters, that upstream lengths of 25 pipe diameters would reduce the effects of disturbances to less than 1%. This error increased to approximately 4% for straight upstream lengths of only 4 pipe diameters. Downstream obstructions were much less significant.

Chapter VI

COSTS

The materials and installation procedures used in the initial construction of the metering system (Fig. 6 and Fig. 7) were selected largely due to availability. The approximate cost of the metering system is given in Table 1.

This cost could be greatly reduced if alternatives to standard flanges and the original orifice plate design could be found. A method of doing this is illustrated in Appendix B and Appendix C. The aluminum orifice plate is replaced by a rectangular steel plate, machined on one side. This orifice segment could be welded directly to the pipe, eliminating flanges and orifice plates, and also reducing installation time and expense. The cost of this method is estimated as \$90 for the Pressure Discharge System and \$60 for the Free Discharge System, completely installed. The estimated costs include \$30 for the flow meter, \$5 for the orifice, and the remainder for welding and installation.

Another alternative is to fabricate the entire metering section in a machine shop. The installation would involve cutting a equivalent length of pipe from the existing system. The pre-fabricated metering section could be attached to the existing metal pipe by a Dressler coupling. Not only would this save on cost of materials, but it would also eliminate the need for field welding. Estimated costs, assuming factory production, are given in Table 2.

The curves developed in the laboratory are still valid for either of the alternatives discussed as long as certain design criteria are not changed. The shunt line openings must be exactly 1/2 in. diameter holes, free from burrs on the inside of the pipe. The shunt line openings must be located exactly one inside pipe diameter (1D) upstream from the orifice edge and one half inside pipe diameter downstream. These openings must be at the vertical mid-point of the pipe. All dimensions of the shunt line must be the same as given in Fig. 6 and Fig. 7. The flow meter must be a 3/4 in. Tempe turbine meter. The orifice edge must be machined smooth and be installed in a vertical orientation. The orifice contraction, d , is determined as in the original system.

Table 1-A

Estimated Cost of Pressure Discharge Metering System
Laboratory System

Item	Pipe Size 4 in.	 6 in.	 8 in.	 10 in.	 12 in.
3/4 in. water meter	$30	$30	$30	$30	$30
Shunt line Components, nuts and bolts	$10	$10	$10	$10	$10
Orifice Plate	$25	$30	$35	$40	$45
Sub-Totals	$65	$70	$75	$80	$85
Flanges	$40	$60	$100	$140	$210
Total	$105	$130	$175	$220	$325

These totals do not include the costs of welding. The welding time is estimated at one hour.

The sub-total represents the cost if flanges are already present in the existing irrigation system.

Table 1-B

Estimated Cost of Free Discharge Metering System
Laboratory System

Item	Pipe Size 4 in.	6 in.	8 in.	10 in.	12 in.
3/4 in. water meter	$30	$30	$30	$30	$30
Shunt line Components, nuts and bolts	$10	$10	$10	$10	$10
Orifice Plate	$25	$30	$35	$40	$45
Sub-Total	$65	$70	$75	$80	$85
Flanges	$20	$30	$50	$70	$105
Total	$85	$100	$125	$150	$190

These totals do not include the cost of welding. The welding time is estimated at one hour.

The sub-total represents the cost if a flange is already present on the existing irrigation system.

Table 2-A

Estimated Costs of Pressure Discharge Metering System
Pre-Fabricated Metering Section

Item	Pipe Size				
	4 in.	6 in.	8 in.	10 in.	12 in.
3/4 in. Tempe Meter	$30	$30	$30	$30	$30
Dressler Coupling	$40	$60	$70	$85	$95
Pre-Fabricated Metering Section	$30	$30	$30	$30	$30
Installation Costs	$20	$20	$20	$20	$20
Total	$120	$140	$150	$165	$175

Table 2-B

Estimated Costs of Free Discharge Metering System
Pre-Fabricated Metering Section

Item	Pipe Size				
	4 in.	6 in.	8 in.	10 in.	12 in.
3/4 in. Tempe Meter	$30	$30	$30	$30	$30
Dressler Coupling	$20	$30	$35	$40	$50
Pre-Fabricated Metering Section	$20	$20	$20	$20	$20
Installation Costs	$10	$10	$10	$10	$10
Total	$80	$90	$95	$100	$110

Chapter VII

ACCURACY

The accuracy of this metering system is determined by the accuracy of the water meter, the accuracy of the laboratory curves, and the effect of field problems which may exist at specific wells. These could be pipe configurations, high sediment load, or intermittant pumping of air and water.

As discussed earlier, this metering system is not intended for use on high sediment flows. No error is anticipated due to either suspended sediment or entrained air in the amounts normally found in irrigation flow. The error occurring from intermittant pumping of air and water is a function of time of duration and is assumed to be negligible for most wells over a time period as large as the irrigation season. This metering system is not recommended for use on wells which intermittantly pump air and water over long periods.

The lack of sufficient length of straight upstream pipe will be a problem in metering many wells in this state. Replogle (6) tested the effect of upstream obstructions by installing two 90° elbows at varying distances upstream of his meter. The results ranged from less than +1% error for a straight upstream reach of at least 25 pipe diameters to +4% error for a straight upstream reach of only 4 pipe diameters. Assuming similar errors occur with the segmental orifice meter, it is apparent that the accuracy of the metering system can be affected by existing field conditions.

Since the laboratory work for this project was conducted on piping systems having straight upstream lengths of from 15 to 50 pipe diameters, it is assumed that similar field situations will adequately reproduce the conditions under which the discharge relationships were developed. Thus it is suggested that no error component need be included for irrigation systems with straight upstream lengths equal to or greater than 15 pipe diameters. For more severe cases, assume ± 4% error for 4 pipe diameters and ± 1% for 14 pipe diameters.

The following error analysis is based upon the metering system's performance in the laboratory. This accuracy rating will also be valid for field installations provided that the sediment concentration is less than 60 ppm, there is no intermittant pumping of air and water, and that there is at least 15 pipe diameters of straight unobstructed upstream pipe (preferably more).

The flow meters were found to be accurate to within ± 2.0% for the flow rates used in the shunt line metering system (Fig. 9). The remainder of the error occurs in the determination of the discharge coefficient, c , in the equation

$$Q = cq \tag{38}$$

As discussed earlier (pg 14) an error results from eliminating the intercept value. This error was evaluated by the method used on pg 26 and the resulting error for each pipe size is recorded in Table 3. The evaluation of this error component and the following components requires the use of a standard shunt line discharge, q , for each pipe size. The value of 3.0 gpm was selected for all pipe sizes except the

4 in. pipe, where a 3.5 gpm discharge is used as standard. This was necessary to reduce the error for this pipe size. The error increases with decreases in pipe discharge and shunt line discharge, so the 4 in. pipe discharges presented a larger error than necessary.

The third error component involved the data taking (pg 23) necessary to determine the pipe vs shunt line relationship, or discharge coefficient, c . The error was the result of instrument readings; a differential manometer, flow meter, and watch.

$$c = \frac{Q}{q} = \frac{K\sqrt{H}}{V/T} = K\,H^{1/2}\,V^{-1}\,T \tag{39}$$

where

$K\ (\frac{gal}{min\ ft}{}^{1/2})$	is the discharge coefficient for the 12 in. orifice meter
H (ft)	is the manometer reading
V (gal)	is the total volume of water passing through the shunt line meter
T (min)	is the total time of the run

The error can be evaluated by

$$\Delta c = \Delta H\,\frac{\partial c}{\partial H} + \Delta V\,\frac{\partial c}{\partial V} + \Delta T\,\frac{\Delta c}{\Delta T} \tag{40}$$

$$\Delta c = \Delta H\,K(1/2)\,H^{-1/2}\,V^{-1}\,T + \Delta V\,K\,H^{1/2}\,(-1)\,V^{-2}\,T$$

$$+ \Delta T\,K\,H^{1/2}\,V^{-1} \tag{41}$$

This can be expressed in % Error by dividing Δc by c.

$$\frac{\Delta c}{c} = \frac{\Delta H\ K(1/2)\ H^{-1/2}\ V^{-1}\ T + \Delta V\ K\ H^{1/2}\ (-1)\ V^{-2}\ T + \Delta T\ K\ H^{1/2}\ V}{K\ H^{1/2}\ V^{-1}\ T} \tag{42}$$

$$\frac{\Delta c}{c} = 1/2\ \frac{\Delta H}{H} - \frac{\Delta V}{V} + \frac{\Delta T}{T} \tag{43}$$

The value of ΔT is constant at one second. T is also constant and is equal 10 minutes. The value of V is 30. gal for all pipe sizes except the 4 in. pipe, for which V is equal 35. gal. The error in reading the manometer, ΔH, varies depending on the magnitude of H, or also the pipe discharge, Q, since Q is proportional to H. The value of ΔH is estimated below

	ΔH
For $Q < 400$ gpm	.005 ft
400 gpm $< Q <$ 1000 gpm	.005 ft + $8.3 \times 10^{-6}\ Q_o$
	where $Q_o = Q - 400$ gpm
1000 gpm $< Q$	.01 ft + $5.0 \times 10^{-6}\ Q_o$
	where $Q_1 = Q - 1000$ gpm

The error in reading the flow meter, ΔV, depends upon the flow rate. The value of ΔV is estimated below

	ΔV
For $q < 2.5$ gpm	.05 gal
2.5 gpm $< q$	.05 gal + $0.02\ q_o$
	where $q_o = q - 2.5$

The error due to instrument reading is recorded for each pipe size in Table 3. The total accuracy of the metering system for a tested orifice size and pipe size is also given in Table 3.

In field situations it will often be desireable to use an orifice size different from the ones tested in the laboratory. This can be done by using Fig. 13 and Fig. 14, as illustrated by previous examples. However, another error must be introduced to account for the data scatter about the curves of Fig. 13 and Fig. 14. This error is taken as the maximum percent deviation of any point from the curve. The total accuracy of the system is given in Table 3.

Graphs were presented in this paper (Fig. 15 and Fig. 16) which provide information necessary to measure discharges from wells having different pipe diameters than the ones tested in the laboratory. The relationship of curves representing different pipe sizes to each other is not the uniform progression desired. This makes it necessary to estimate a high value for the maximum expected error. From inspection of the graphs a maximum error of $\pm$ 15% is assumed. Coupled with the previous error components, this leads to an expected accuracy of within $\pm$ 20% when metering wells with pipe diameters other than 4 in., 6 in., 8 in., 10 in., or 12 in.

An accurate measurement can be achieved on these odd-size pipes with this shunt line metering system by field calibrating the system. This could be done by simultaneously measuring the well discharge rate and the corresponding meter rate. The discharge coefficient, c , would be found from

$$c = \frac{Q}{q} \tag{44}$$

Table 3

Error Analysis of Shunt Line Metering Systems

Nominal Pipe Size (in.)	$E_1^{(1)}$	$E_2^{(2)}$	$E_3^{(3)}$	Total$^{(4)}$ Error	$E_4^{(5)}$	Total(6) Error
4	2.0	2.0	1.0	5.0	1.5	6.5
6	2.0	1.75	1.0	4.75	1.5	6.25
8	2.0	1.5	1.0	4.5	1.75	6.25
10	2.0	0.5	2.0	4.5	2.0	6.5
12	2.0	0.5	2.0	4.5	2.0	6.5

(1) E_1 is the error due to the flow meter inaccuracy (Fig. 9)

(2) E_2 is the error due to instrument reading (pg. 69)

(3) E_3 is the error due to forcing the $Q = cq$ plot through the origin (pg. 26)

(4) This is the maximum error expected when using laboratory tested orifice sizes under laboratory conditions.

(5) E_4 is the error due to using an untested orifice size (pg. 71)

(6) This is the maximum error expected when using untested orifice sizes under laboratory conditions.

NOTES: 1. This error analysis was developed for systems using the standard design shunt line discharge - $q = 3.0$ gpm for 6 in., 8 in., 10 in., and 12 in. pipe sizes, and $q = 3.5$ gpm for the 4 in. pipe size.

2. This error analysis is valid for both Free and Pressure Discharge Systems.

The accuracy of the metering would then be determined by the accuracy of the well discharge measurement and flow meter accuracy (± 2%).

$$\Delta c = \left|\Delta Q \frac{\partial c}{\partial Q}\right| + \left|\Delta q \frac{\partial c}{\partial q}\right| \qquad (45)$$

$$\Delta c = \left|\Delta Q \frac{1}{q}\right| + \left|\Delta q \frac{Q}{q^2}\right| \qquad (46)$$

where

q and Q are determined from field measurement

$\Delta q = .02\ q$

ΔQ is dependent upon the method of well discharge measurement. The most desirable method is the Parshall flume which is accurate to within ± 2%. Another suitable measuring device is the Sparling meter, accurate to within ± 2%. The main point is that flow through any size pipe could be metered with the desired accuracy of within ± 7%.

Chapter VIII

CONCLUSIONS AND RECOMMENDATIONS

The shunt line metering system demonstrated an accuracy within ± 5.0% when installed on 4 in., 6 in., 8 in., 10 in., or 12 in. pipes with a laboratory tested orifice size. An additional 1.5 - 2.0% error could result from using an untested orifice size. Obviously it is desirable to use the tested orifice sizes. However, an error of within ± 7% is still adequate for most irrigation water measurement. The low cost of this metering system should more than offset the error in the system.

Additional laboratory and field studies could reduce the error and increase the versatility of the system. Presently, use of this system is discouraged on pipe sizes other than the ones tested, unless field calibration is done. Laboraotry study of other pipe sizes would make the system more versatile, perhaps defining the discharge relationships better so that all pipe sizes could be metered without field calibration. Also, testing other orifice sizes could reduce the total error to about ± 5.5 - 6.0% by more accurately defining the relationship of discharge coefficient to orifice size.

It is important to follow this laboratory study with field studies to check the durability and accuracy of the metering system. The overall error can be determined by simultaneously measuring the shunt line meter discharge and the well discharge and calculating the discharge coefficient. If this check on accuracy is to be meaningful, the well discharge measurement must be accurate to about ± 2%. This accuracy could be achieved by using a calibrated Parshall Flume.

If these studies were made on a large number of wells with varying piping configurations, a better understanding of the effect of the length of straight upstream pipe could be obtained. Similar studies could better define the effect of sediment on the discharge coefficient, hence the accuracy of the metering system. Also studies need to be done using the modified metering system design which eliminates flanges and circular orifice plates, as described in Appendixes B and C.

In conclusion, the small size, low cost, and degree of accuracy make the shunt line metering system a viable means of monitoring irrigation well discharges.

LIST OF REFERENCES

Addison, Herbert, "The Use of Pipe Bends as Flow Meters", Engineering, London, England, March 4, 1938, pp. 227-229.

American Society of Mechanical Engineers, "Fluid Meters, Their Theory and Application", Report of the ASME Research Committee of Fluid Meters, Fifth Edition, 1959.

Colt Industries, Fairbanks Morse Pump Division, "Hydraulic Handbook", Fourth Edition, 1965.

Kruse, E. Gordon and David A. Young, "Segmental Orifices with Shunt Meters to Totalize Pipeline Flow". Presented at the ASAE 1974 Winter Meeting, Conrad Hilton, Chicago, Illinois, December 10-13, 1974.

Lansford, Wallace M., "The Use of an Elbow in a Pipe Line for Determining the Rate of Flow in the Pipe", Bulletin No. 289, University of Illinois, Engineering Experiment Station, Urbana, Illinois, December, 1936.

Pennino, Bruce J. and Herman Koloseus, "Sediment and Air Effects on Shunted Elbow Meters", unpublished report. Work conducted at Colorado State University.

Replogle, John A., Lloyd E. Meyers, and Kenneth J. Brust, "Evaluation of Pipe Elbows as Flow Meters", Journal of the Irrigation and Drainage Division, ASCE 92, (IR3): Proceedings Paper 4888, pp. 17-34, September, 1966.

Replogle, John A., "Modifying Elbow Meters to Totalize Flow", Transactions of the ASAE, Vol. 14, No. 5, pp. 987-994, September - October, 1971.

APPENDICES

Appendix A

A METHOD OF APPROXIMATING PIPE DISCHARGE FROM A FREE DISCHARGE WELL

This method of discharge approximation is developed from projectile theory. Table 4 was generated by using Eq. 47. Similar examples of this method can be found in various hydraulic handbooks, such as the one published by Colt Industries (3).

The accuracy of this method will vary from 90 - 100%. The pipe must be flowing full (Fig. 18).

$$\text{Capacity, Gpm} = \frac{2.45\ D^2\ x}{\sqrt{\frac{2y}{32.16}}} \qquad (47)$$

where (see Fig. 18)

D = Pipe diameter, in.

x = Horizontal distance, ft.

y = Vertical distance, ft.

This can be further simplified by measuring to the top of the flowing stream and always measuring so that y will equal 12 inches and measuring the horizontal distance "X" in inches as illustrated in Fig. 19.

Table 4

Approximating Flow from a Free Discharge Well, Gpm, As Illustrated in Fig. 19

Inside Pipe Diameter		Capacity, gpm, = $0.829\ D^2\ X$										
		Distance X, in., where y = 12 in.										
Nominal	Actual	12	14	16	18	20	22	24	26	28	30	32
3	3.068	94	109	125	141	156	171	187	203	219	234	249
4	4.026	161	189	215	242	270	296	322	350	377	403	431
5	5.047	253	296	338	381	423	465	508	550	593	635	677
6	6.065	367	428	488	549	610	671	732	793	853	914	975
8	7.981	635	742	848	955	1061	1165	1272	1378	1485	1591	1698
10	10.020	993	1160	1328	1495	1657	1824	1991	2159	2321	2488	2655
12	12.000	1434	1672	1915	2154	2392	2630	2868	3106	3344	3588	3826

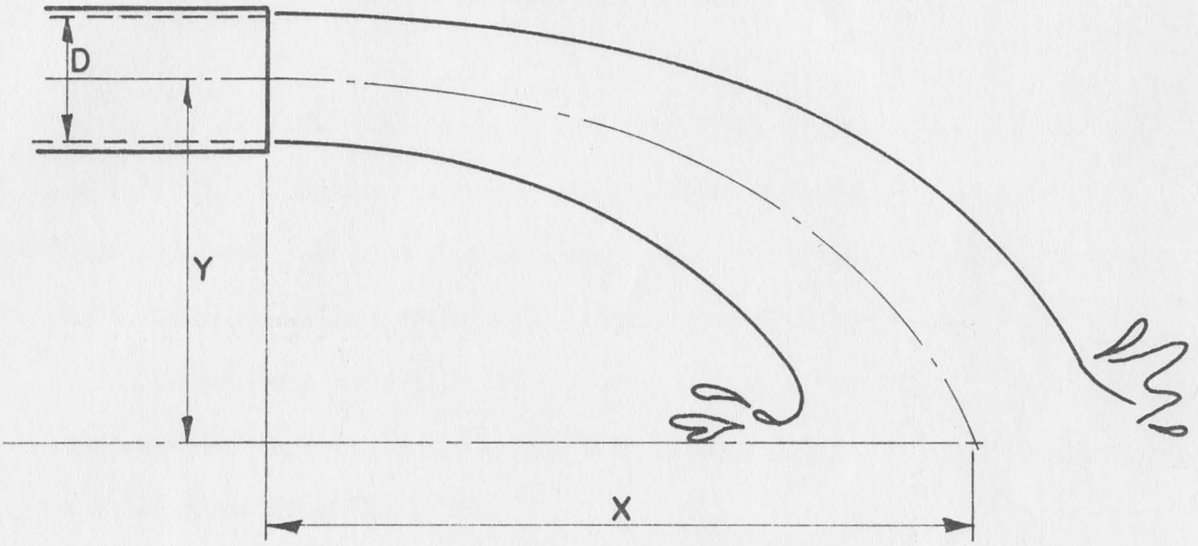

Fig. 18 Approximating Well Discharge, Method 1

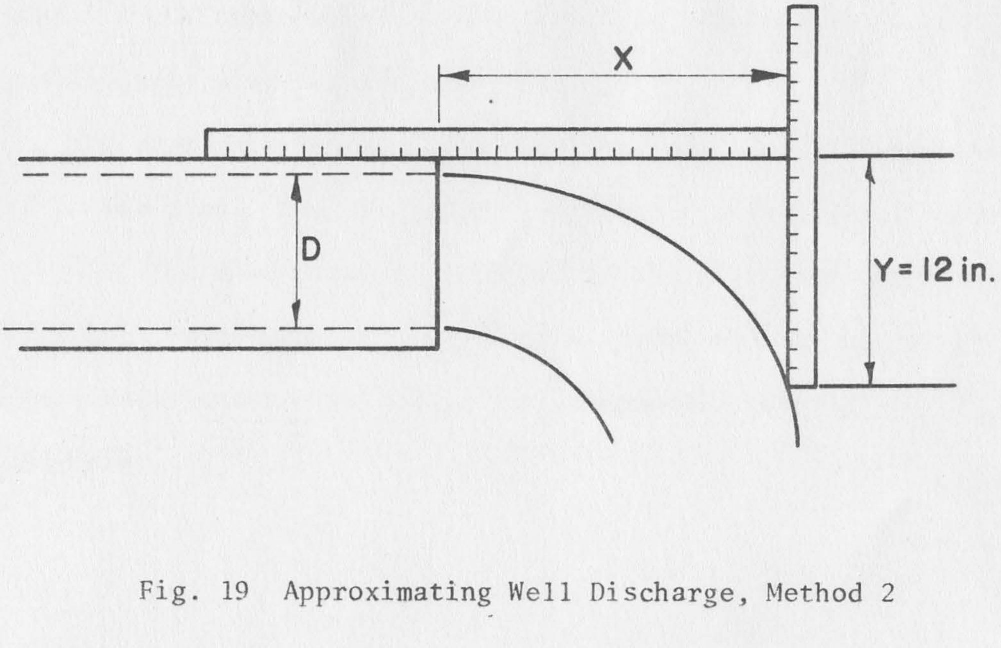

Fig. 19 Approximating Well Discharge, Method 2

Appendix B

INSTALLATION OF THE METERING SYSTEM

FREE DISCHARGE SYSTEM (FIG. 20)

1. Check the condition of the irrigation pipe. The end of the pipe should be square with the longitudinal centerline of the pipe. Otherwise mark the pipe appropriately and cut a small section from the end. Grind any burrs that exist around the inside of the pipe.

2. Weld the orifice plate onto the end of the pipe. The orifice edge must be vertical and the orifice dimension, d , must be the same as determined from the graphs.

3. The drill hole for the shunt line opening is located one inside pipe diameter, 1D , from the upstream face of the orifice plate. The 1/2 in. hole is drilled horizontally at the vertical mid-point of the pipe. It is important to remove any burrs created by the drilling, particularly from the inside of the pipe.

4. Center a 3/4 in. pipe coupling over the drill hole and weld it to the pipe. Use non-galvanized couplings for easier welding.

5. The shunt line is attached to the pipe coupling and consists of a 3 in. pipe coupling, a 90° elbow, a meter coupling, and a 3/4 in. Tempe water water. All shunt line compenents have 3/4 in. inside diameters.

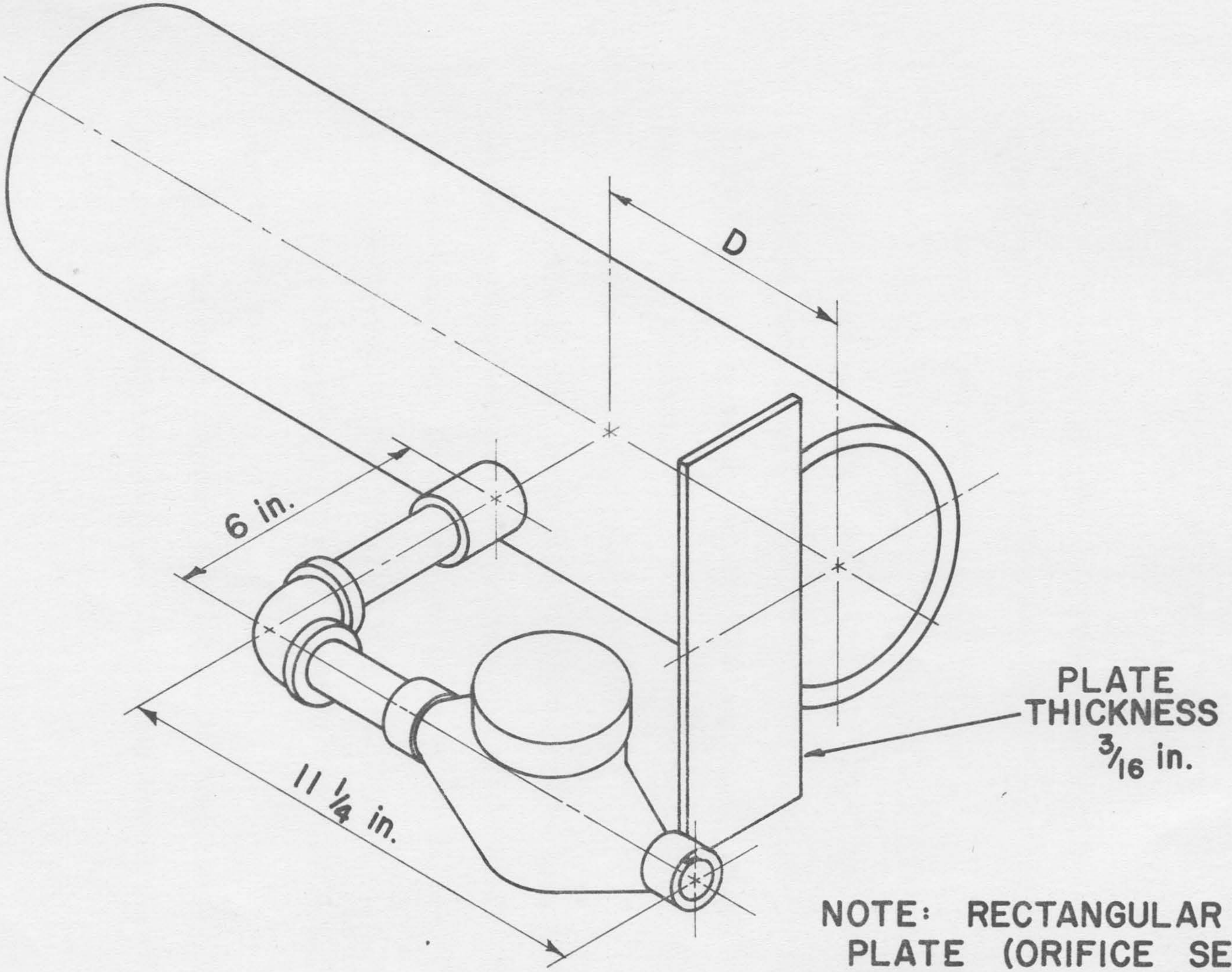

NOTE: RECTANGULAR STEEL PLATE (ORIFICE SEGMENT) WELDED TO END OF PIPE.

Fig. 20 Modified Design of the Free Discharge Metering System

Appendix C

INSTALLATION OF THE METERING SYSTEM
PRESSURE DISCHARGE SYSTEM (FIG. 21)

1. A location for the metering system must be chosen. Consideration should be given to having the largest possible upstream straight pipe, and to the convenience of the farmer.

2. Cut a slot in the pipe, as illustrated in Fig. 21. This can be done with a saw, or a torch if care is exercised. The depth of the cut must be just right so that the orifice edge slips into the pipe the distance, d , previously determined from the graphs. The orifice edge must be vertical.

3. Weld the orifice plate to the pipe.

4. The 1/2 in. drill holes are located one pipe diameter upstream and 1/2 pipe diameter downstream from the orifice edge (Fig. 6). Drill the holes horizontally and be sure to clean any burrs from the drill holes, particularly from the inside of the pipe.

5. Position a 3/4 in. pipe coupling over each drill hole and weld them to the pipe.

6. The shunt line consists of 3/4 in. steel pipe, 90° elbows, and a 3/4 in. Tempe water meter. The dimensions are given in Fig. 6.

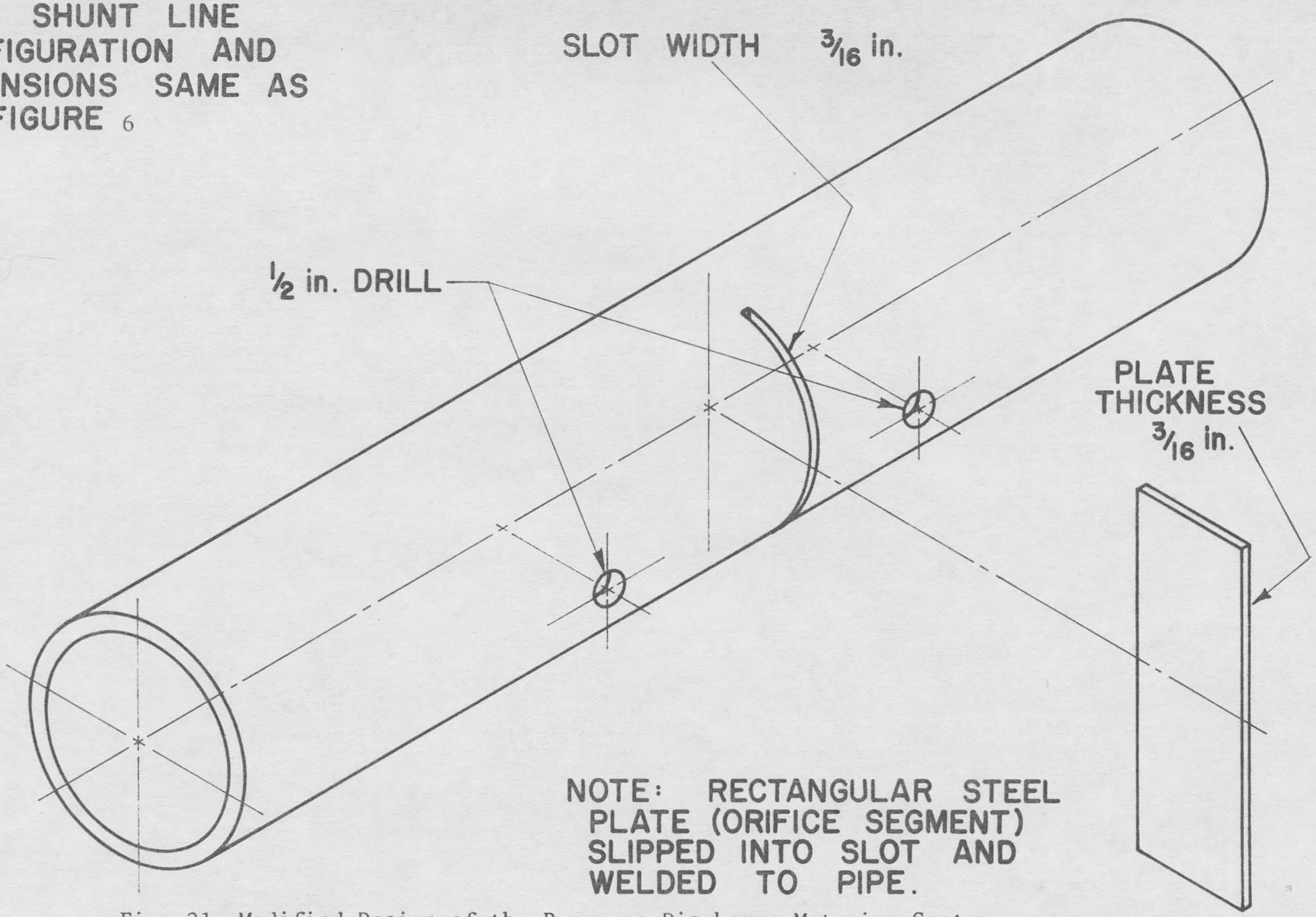

NOTE: SHUNT LINE CONFIGURATION AND DIMENSIONS SAME AS IN FIGURE 6

NOTE: RECTANGULAR STEEL PLATE (ORIFICE SEGMENT) SLIPPED INTO SLOT AND WELDED TO PIPE.

Fig. 21 Modified Design of the Pressure Discharge Metering System