WIND-TUNNEL STUDY OF BASS BROTHERS OFFICE TOWERS, FORT WORTH

by

J. A. Peterka* and J. E. Cermak**

for

3D/International
1900 West Loop South, Suite 200
Houston, Texas 77027

Fluid Mechanics and Wind Engineering Program
Fluid Dynamics and Diffusion Laboratory
Department of Civil Engineering
Colorado State University
Fort Collins, Colorado 80523

Project 2-26990

November 1980

* Associate Professor
** Professor-in-Charge, Fluid Mechanics and Wind Engineering Program

CER80-81JAP-JEC19

TABLE OF CONTENTS

LIST OF FIGURES

LIST OF TABLES

LIST OF SYMBOLS

Symbol	Definition
U	Local mean velocity
D	Characteristic dimension (building height, width, etc.)
ν, ρ	Kinematic viscosity and density of approach flow
$\frac{UD}{\nu}$	Reynolds number
E	Mean voltage
A, B, n	Constants
U_{rms}	Root-mean-square of fluctuating velocity
E_{rms}	Root-mean-square of fluctuating voltage
U_∞	Reference mean velocity outside the boundary layer
X, Y	Horizontal coordinates
Z	Height above surface
δ	Height of boundary layer
T_u	Turbulence intensity $\frac{U_{rms}}{U_\infty}$ or $\frac{U_{rms}}{U}$
$C_{p_{mean}}$	Mean pressure coefficient, $\frac{(p-p_\infty)_{mean}}{0.5\ \rho\ U_\infty^2}$
$C_{p_{rms}}$	Root-mean-square pressure coefficient, $\frac{\left((p-p_\infty)-(p-p_\infty)_{mean}\right)_{rms}}{0.5\ \rho\ U_\infty^2}$
$C_{p_{max}}$	Peak maximum pressure coefficient, $\frac{(p-p_\infty)_{max}}{0.5\ \rho\ U_\infty^2}$
$C_{p_{min}}$	Peak minimum pressure coefficient, $\frac{(p-p_\infty)_{min}}{0.5\ \rho\ U_\infty^2}$
$(\ )_{min}$	Minimum value during data record
$(\ )_{max}$	Maximum value during data record

Symbol	Definition
p	Fluctuating pressure at a pressure tap on the structure
p_∞	Static pressure in the wind tunnel above the model
F_x, F_y	Forces in X, Y direction
A_R	Reference Area
CF_X	Force coefficient, X direction, $\frac{F_x}{A_R \; 0.5\rho \; U_\infty^2}$
CF_Y	Force coefficient, Y direction, $\frac{F_y}{A_R \; 0.5\rho \; U_\infty^2}$

1. INTRODUCTION

1.1 General

A significant characteristic of modern building design is lighter cladding and more flexible frames. These features produce an increased vulnerability of glass and cladding to wind damage and result in larger deflections of the building frame. In addition, increased use of pedestrian plazas at the base of the buildings has brought about a need to consider the effects of wind and gustiness in the design of these areas.

The building geometry itself may increase or decrease wind loading on the structure. Wind forces may be modified by nearby structures which can produce beneficial shielding or adverse increases in loading. Overestimating loads results in uneconomical design; underestimating may result in cladding or window failures. Tall structures have historically produced unpleasant wind and turbulence conditions at their bases. The intensity and frequency of objectionable winds in pedestrian areas is influenced both by the structure shape and by the shape and position of adjacent structures.

Techniques have been developed for wind tunnel modeling of proposed structures which allow the prediction of wind pressures on cladding and windows, overall structural loading, and also wind velocities and gusts in pedestrian areas adjacent to the building. Information on sidewalk-level gustiness allows plaza areas to be protected by design changes before the structure is constructed. Accurate knowledge of the intensity and distribution of the pressures on the structure permits adequate but economical selection of cladding strength to meet selected maximum design winds and overall wind loads for the design of the frame for flexural control.

Modeling of the aerodynamic loading on a structure requires special consideration of flow conditions in order to guarantee similitude between model and prototype. A detailed discussion of the similarity requirements and their wind-tunnel implementation can be found in references (1), (2), and (3). In general, the requirements are that the model and prototype be geometrically similar, that the approach mean velocity at the building site have a vertical profile shape similar to the full-scale flow, that the turbulence characteristics of the flows be similar, and that the Reynolds number for the model and prototype be equal.

These criteria are satisfied by constructing a scale model of the structure and its surroundings and performing the wind tests in a wind tunnel specifically designed to model atmospheric boundary-layer flows. Reynolds number similarity requires that the quantity UD/ν be similar for model and prototype. Since ν, the kinematic viscosity of air, is identical for both, Reynolds numbers cannot be made precisely equal with reasonable wind velocities. To accomplish this the air velocity in the wind tunnel would have to be as large as the model scale factor times the prototype wind velocity, a velocity which would introduce unacceptable compressibility effects. However, for sufficiently high Reynolds numbers ($>2\times10^4$) the pressure coefficient at any location on the structure will be essentially constant for a large range of Reynolds numbers. Typical values encountered are 10^7-10^8 for the full-scale and 10^5-10^6 for the wind-tunnel model. In this range acceptable flow similarity is achieved without precise Reynolds number equality.

1.2 The Wind-Tunnel Test

The wind-engineering study is performed on a building or building group modeled at scales ranging from 1:150 to 1:400. The building model

is constructed of clear plastic fastened together with screws. The structure is modeled in detail to provide accurate flow patterns in the wind passing over the building surfaces. The building under test is often located in a surrounding where nearby buildings or terrain may provide beneficial shielding or adverse wind loading. To achieve similarity in wind effects the area surrounding the test building is also modeled. A flow visualization study is first made (smoke is used to make the air currents visible) to define overall flow patterns and identify regions where local flow features might cause difficulties in building curtain-wall design or produce pedestrian discomfort.

The test model, equipped with pressure taps (200 to 600 or more), is exposed to an appropriately modeled atmospheric wind in the wind tunnel and the fluctuating pressure at each tap measured electronically. The model, and the modeled area, are rotated 10 or 15 degrees and another set of data recorded for each pressure tap. Normally, 24 or 36 sets of data (360 degrees of turning) are taken; however, when flow visualization or recorded data indicate high pressure regions of small azimuthal extent, data is obtained in smaller azimuthal steps.

Data are recorded, analyzed and processed by an on-line computerized data-acquisition system. Pressure coefficients of several types are calculated by the computer for each reading on each piezometer tap and are printed in tabular form as computer readout. Using wind data applicable to the building site, representative wind velocities are selected for combination with measured pressures on the building model. Integration of test data with wind data results in prediction of peak local wind pressures for design of glass or cladding and may include overall forces and moments on the structure (by floor if desired) for design of

the structural frame. Pressure contours are drawn on the developed building surfaces showing the intensity and distribution of peak wind loads on the building. These results may be used to divide the building into zones where lighter or heavier cladding or glass may be desirable.

Based on the visualization (smoke) tests and on a knowledge of heavy pedestrian use areas, a dozen or more locations may be chosen at the base of the building where wind velocities can be measured to determine the relative comfort or discomfort of pedestrians in plaza areas, near building entrances, near building corners, or on sidewalks. Usually a reference pedestrian position is also tested to determine whether the wind environment in the building area is better or worse than the environment a block or so away in an undisturbed area.

The following pages discuss in greater detail the procedures followed and the equipment and data collecting and processing methods used. In addition, the data presentation format is explained and the implications of the data are discussed.

2. EXPERIMENTAL CONFIGURATION

2.1 Wind Tunnel

Wind-engineering studies are performed in the Fluid Dynamics and Diffusion Laboratory at Colorado State University (Figure 1). Three large wind tunnels are available for wind loading studies depending on the detailed requirements of the study. The wind tunnel used for this investigation is shown in Figure 2. All tunnels have a flexible roof adjustable in height to maintain a zero pressure gradient along the test section. The mean velocity can be adjusted continuously in each tunnel to the maximum velocity available.

2.2 Model

In order to obtain an accurate assessment of local pressures using piezometer taps, models are constructed to the largest scale that does not produce significant blockage in the wind-tunnel test section. The models are constructed of 1/2 in. thick Lucite plastic and fastened together with metal screws. Significant variations in the building surface, such as mullions, are machined into the plastic surface. Piezometer taps (1/16 in. diameter) are drilled normal to the exterior vertical surfaces in rows at several or more elevations between the bottom and top of the building. Similarly, taps are placed in the roof and on any sloping, protruding, or otherwise distinctive features of the building that might need investigation.

Pressure tap locations are chosen so that the entire surface of the building can be investigated for pressure loading and at the same time permit critical examination of areas where experience has shown that maximum wind effects may be expected to occur. Locations of the pressure taps for this study are shown in Figure 3. Dimensions are

given both for full-scale building (in ft) and for model (in in.). The pressure tap numbers are shown adjacent to the taps.

The pressure tests are sometimes made in two stages. In the first stage measurements are made on the initial distribution of pressure taps. If it becomes apparent from the data that the loading on the building is being influenced by some unsuspected geometry of the building or adjacent structures, additional pressure taps are installed in the critical areas. The locations of the taps are selected so that the maximum loading can be detected and the area over which this loading is acting can be defined. Any added taps are also shown in Figure 3.

A circular area 750 to 2000 ft in radius depending on model scale and characteristics of the surrounding buildings and terrain is modeled in detail. Structures within the modeled region are made from styrofoam and cut to the individual building geometries. They are mounted on the turntable in their proper locations. Significant terrain features are included as needed. The model is mounted on a turntable (Figure 2) near the downwind end of the test section. Any buildings or terrain features which do not fit on the turntable are placed on removable pieces which are placed upwind of the turntable for appropriate wind directions. A plan view of the building and its surroundings is shown in Figure 4. The turntable is calibrated to indicate azimuthal orientation to 0.1 degree.

The region upstream from the modeled area is covered with a randomized roughness constructed using various sized cubes placed on the floor of the wind tunnel. Different roughness sizes may be used for different wind directions. Spires are installed at the test-section entrance to provide a thicker boundary layer than would otherwise be

available. The thicker boundary layer permits a somewhat larger scale model than would otherwise be possible. The spires are approximately triangularly shaped pieces of 1/2 in. thick plywood 6 in. wide at the base and 1 in. wide at the top, extending from the floor to the top of the test section. They are placed so that the broad side intercepts the flow. A barrier approximately 8 in. high is placed on the test-section floor downstream of the spires to aid in development of the boundary-layer flow.

The distribution of the roughness cubes and the spires in the roughened area was designed to provide a boundary-layer thickness of approximately 4 ft, a velocity profile power-law exponent similar to that expected to occur in the region approaching the modeled area for each wind direction (a number of wind directions may have the same approach roughness). A photograph of the completed model in the wind tunnel is shown in Figure 5. The wind-tunnel ceiling is adjusted after placement of the model to obtain a zero pressure gradient along the test section.

3. INSTRUMENTATION AND DATA ACQUISITION

3.1 Flow Visualization

Making the air flow visible in the vicinity of the model is helpful (a) in understanding and interpreting mean and fluctuating pressures, (b) in defining zones of separated flow and reattachment and zones of vortex formation where pressure coefficients may be expected to be high and (c) in indicating areas where pedestrian discomfort may be a problem. Titanium tetrachloride smoke is released from sources on and near the model to make the flow lines visible to the eye and to make it possible to obtain motion picture records of the tests. Conclusions obtained from these smoke studies are discussed in Sections 4.1 and 5.1.

3.2 Pressures

Mean and fluctuating pressures are measured at each of the pressure taps on the model structure. Data are obtained for 24 or 36 wind directions, rotating the entire model assembly in a complete circle. Seventy-six pieces of 1/16 in. I.D. plastic tubing are used to connect 76 pressure ports at a time to an 80 tap pressure switch mounted inside the model. The switch was designed and fabricated in the Fluid Dynamics and Diffusion Laboratory to minimize the attenuation of pressure fluctuations across the switch. Each of the 76 measurement ports is directed in turn by the switch to one of four pressure transducers mounted close to the switch. The four pressure input taps not used for transmitting building surface pressures are connected to a common tube leading outside the wind tunnel. This arrangement provides both a means of performing in-place calibration of the transducers and, by connecting this tube to a pitot tube mounted inside the wind tunnel, a means of automatically monitoring the tunnel speed. The switch is operated by means of a shaft projecting through

the floor of the wind tunnel. A computer-controlled stepping motor steps the switch into each of the 20 required positions. The computer keeps track of switch position but a digital readout of position is provided at the wind tunnel.

The pressure transducers used are setra differential transducers (Model 237) with a 0.10 psid range. Reference pressures are obtained by connecting the reference sides of the four transducers, using plastic tubing, to the static side of a pitot-static tube mounted in the wind tunnel free stream above the model building. In this way the transducer measures the instantaneous difference between the local pressures on the surface of the building and the static pressure in the free stream above the model.

Output from the pressure transducers is fed to an on-line data acquisition system consisting of a Hewlett-Packard 21 MX computer, disk unit, card reader, printer, Digi-Data digital tape drive and a Preston Scientific analog-to-digital converter. The data are processed immediately into pressure coefficient form as described in Section 4.3 and stored for printout or further analysis.

All four transducers are recorded simultaneously for 16 seconds at a 250 sample per second rate. The results of an experiment to determine the length of record required to obtain stable mean and rms (root-mean-square) pressures and to determine the overall accuracy of the pressure data acquisition system is shown in Figure 6. A typical pressure port record was integrated for a number of different time periods to obtain the data shown. Examination of a large number of pressure taps showed that the overall accuracy for a 16 second period is, in pressure coefficient form, 0.03 for mean pressures, 0.1 for peak pressures, and 0.01 for rms pressures. Pressure coefficients are defined in Section 4.3.

3.3 Velocity

Mean velocity and turbulence intensity profiles are measured upstream of the model to determine that an approach boundary-layer flow appropriate to the site has been established. Tests are made at one wind velocity in the tunnel. This velocity is well above that required to produce Reynolds number similarity between the model and the prototype as discussed in Section 1.1.

In addition, mean velocity and turbulence intensity measurements are made 5 to 7 ft (prototype) above the surface at a dozen or more locations on and near the building for 16 wind directions. The measurement locations are shown on Figure 4. The surface measurements are indicative of the wind environment to which a pedestrian at the measurement location would be subjected. The locations are chosen to determine the degree of pedestrian comfort or discomfort at the building corners where relatively severe conditions frequently are found, near building entrances and on adjacent sidewalks where pedestrian traffic is heavy, and in open plaza areas. In most studies a reference pedestrian position, located about a block away, is also tested. These data are helpful in evaluating the degree of pedestrian comfort or discomfort in the proposed plaza area in terms of the undisturbed environment in the immediate vicinity.

Measurements are made with a single hot-wire anemometer mounted with its axis vertical. The instrumentation used is a Thermo Systems constant temperature anemometer (Model 1050) with a 0.001 in. diameter platinum film sensing element 0.020 in. long. Output is directed to the on-line data acquisition system for analysis.

Calibration of the hot-wire anemometer is performed by comparing output with the pitot-static tube in the wind tunnel. The calibration

data are fit to a variable exponent King's Law relationship of the form

$$E^2 = A + BU^n$$

where E is the hot-wire output voltage, U the velocity and A, B, and n are coefficients selected to fit the data. The above relationship was used to determine the mean velocity at measurement points using the measured mean voltage. The fluctuating velocity in the form U_{rms} (root-mean-square velocity) was obtained from

$$U_{rms} = \frac{2\ E\ E_{rms}}{B\ n\ U^{n-1}}$$

where E_{rms} is the root-mean-square voltage output from the anemometer. For interpretation all turbulence measurements for pedestrian winds were divided by the mean velocity outside the boundary-layer U_∞. Turbulence intensity in velocity profile measurements used the local mean velocity.

4. RESULTS

4.1 Flow Visualization

A film is included as part of this report showing the characteristics of flow about the structure using smoke to make the flow visible. A listing of the contents of the film is shown in Table 1. Several features can be noted from the visualization. As with all large structures, wind approaching the building is deflected down to the plaza level, up over the structure and around the sides. A description of the smoke test results emphasizing flow patterns of concern relative to possible high-wind load areas and pedestrian comfort is given in Section 5.1.

4.2 Velocity

Velocity and turbulence profiles are shown in Figure 7. Profiles were taken upstream from the model which are characteristic of the boundary layer approaching the model and sometimes at the building site with building removed. The boundary-layer thickness, δ, is shown in Figure 7. The corresponding prototype value of δ for this study is also shown in the figure. This value was established as a reasonable height for this study. The mean velocity profile approaching the modeled area has the form

$$\frac{U}{U_\infty} = \left(\frac{z}{\delta}\right)^n .$$

The exponent n for the approach flow established for this study is shown in Figure 7.

Profiles of longitudinal turbulence intensity in the flow approaching the modeled area are shown in Figure 7. The turbulence intensities are appropriate for the approach mean velocity profile selected. For the velocity profiles, turbulence intensity is defined

as the root-mean-square about the mean of the longitudinal velocity fluctuations divided by the local mean velocity U,

$$Tu = \frac{U_{rms}}{U} .$$

Velocity data obtained at each of the pedestrian measurement locations shown in Figure 4 are listed in Table 2 as mean velocity U/U_∞, turbulence intensity U_{rms}/U_∞, and largest effective gust

$$U_{pk} = \frac{U + 3U_{rms}}{U_\infty} .$$

These data are plotted in polar form in Figure 8. Measurements were taken 5 to 7 ft above the ground surface. A site map is superimposed on the polar plots to aid in visualization of the effects of the nearby structures on the velocity and turbulence magnitudes. An analysis of these wind data is given in Section 5.2.

To enable a quantitative assessment of the wind environment, the wind-tunnel data were combined with wind frequency and direction information obtained at the local airport. Table 3 shows wind frequency by direction and magnitude obtained from summaries published by the National Weather Service. These data, usually obtained at an elevation of about 30-40 ft, were converted to velocities at the reference velocity height for the wind-tunnel measurements and combined with the wind-tunnel data to obtain cumulative probability distributions (percent time a given velocity is exceeded) for wind velocity at each measuring location. The percentage times were summed by wind direction to obtain a percent time exceeded at each measuring position independent of wind direction (but accounting for the fact that the wind blows from different directions with varying frequency). These results are plotted in Figure 9.

Interpretation of Figure 9 is aided by a description of the effects of wind of various magnitudes on people. The earliest quantitative description of wind effects was established by Sir Francis Beaufort in 1806 for use at sea and is still in use today. Several recent investigators have added to the knowledge of wind effects on pedestrians. These investigations along with suggested criteria for acceptance have been summarized by Penwarden and Wise (4) and Melbourne (5). The Beaufort scale (from ref. 4), based on mean velocity only, is reproduced as Table 4 including qualitative descriptions of wind effects. Table 4 suggests that mean wind speeds below 12 mph are of minor concern and that mean speeds above 24 mph are definitely inconvenient. Quantitative criteria for acceptance from reference 5 are superimposed as dashed lines on Figure 9. The peak gust curves shown in Figure 9 are the percent of time during which a short gust of the stated magnitude could occur (say about one of these gusts per hour). Implications of the data plotted in Figure 9 are presented in Section 5.2

Because some pedestrian wind measuring positions are purposely chosen at sites where the smoke tests showed large velocities of small spacial extent, the general wind environment about the structure may be less severe than one might infer from a strict analysis of Table 2 and Figure 9.

4.3 Pressures

For each of the pressure taps examined at each wind direction, the data record is analyzed to obtain four separate pressure coefficients. The first is the mean pressure coefficient

$$C_{p_{mean}} = \frac{(p-p_\infty)_{mean}}{0.5\ \rho\ U_\infty^{\ 2}}$$

where the symbols are as defined in the List of Symbols. It represents the mean of the instantaneous pressure difference between the building pressure tap and the static pressure in the wind tunnel above the building model, nondimensionalized by the dynamic pressure

$$0.5\ \rho\ U_\infty^{\ 2}$$

at the reference velocity position. This relationship produces a dimensionless coefficient which indicates that the mean pressure difference between building and ambient wind at a given point on the structure is some fraction less or some fraction greater than the undisturbed wind dynamic pressure near the upper edge of the boundary layer. Using the measured coefficient, prototype mean pressure values for any wind velocity may be calculated.

The magnitude of the fluctuating pressure is obtained by the rms pressure coefficient

$$C_{p_{rms}} = \frac{\left((p-p_\infty) - (p-p_\infty)_{mean}\right)_{rms}}{0.5\ \rho\ U_\infty^{\ 2}}$$

in which the numerator is the root-mean-square of the instantaneous pressure difference about the mean .

If the pressure fluctuations followed a Gaussian probability distribution, no additional data would be required to predict the

frequency with which any given pressure level would be observed. However, the pressure fluctuations do not, in general, follow a Gaussian probability distribution so that additional information is required to show the extreme values of pressure expected. The peak maximum and peak minimum pressure coefficients are used to determine these values:

$$C_{p_{max}} = \frac{(p-p_\infty)_{max}}{0.5\ \rho\ U_\infty^{\ 2}}$$

$$C_{p_{min}} = \frac{(p-p_\infty)_{min}}{0.5\ \rho\ U_\infty^{\ 2}}$$

The values of $p-p_\infty$ which were digitized at 250 samples per second for 16 seconds, representing about one hour of time in the full-scale, are examined individually by the computer to obtain the most positive and most negative values during the 16-second period. These are converted to $C_{p_{max}}$ and $C_{p_{min}}$ by nondimensionalizing with the free stream dynamic pressure.

The four pressure coefficients are calculated by the on-line data acquisition system computer and tabulated along with the approach wind azimuth in degrees from true north. The list of coefficients is included as Appendix A. The pressure tap code numbers used in the appendix are explained in Figure 3.

To determine the largest peak loads acting at any point on the structure for cladding design purposes, the pressure coefficients for all wind directions were searched to obtain, at each pressure tap, the largest absolute value of peak pressure coefficient. Table 6 provides these pressure coefficients and associated wind directions. Included in Section 5.3 is an analysis of the coefficients of Table 6 including the maximum values obtained and where they occurred on the building.

The pressure coefficients of Table 6 can be converted to full-scale loads by multiplication by a suitable reference pressure selected for the field site. This reference pressure is represented in the equations for pressure coefficients by the $0.5\ \rho\ U_\infty^2$ denominator. This value is the dynamic pressure associated with an hourly mean wind at the reference velocity measurement position at the edge of the boundary layer. In general, the method of arriving at a design reference pressure for a particular site involves selection of a design wind velocity, translation of the velocity to an hourly mean wind at the reference velocity location and conversion to a reference pressure. Selection of the design velocity can be made from statistical analysis of extreme wind data or selected from wind maps contained in the proposed wind loading code ANSI A58.1 of the American National Standards Institute (6). The calculation of reference pressure for this study is shown in Table 5. The factor used in Table 5 to reduce gust winds to hourly mean winds is given in reference (7).

The reference pressure associated with the design hourly mean velocity at the reference velocity location can be used directly with the peak-pressure coefficients to obtain peak local design wind loads for cladding design. Local, instantaneous peak loads on the full-scale building suitable for cladding design were computed by multiplying the reference pressure of Table 5 by the peak coefficients of Table 6 and are listed as peak pressures in that table. The maximum psf load given at each tap location is the absolute value of the maximum value found in the tests, irrespective of its algebraic sign. For ease in visualizing the loads on the structure, contours of equal peak pressures for cladding load shown in Table 6 have been plotted on developed elevation

views of the structure, Figure 10. For control of water infiltration from outside to inside, the largest positive (inward-acting) pressure at each tap location is tabulated in Table 6.

For glass design pressures, a glass load factor is used to account for the different duration between measured peak pressures and the one minute loading commonly used in glass design charts. The design pressure used for glass is normally less than the peak pressures used for cladding design because of the static fatigue property of glass which can withstand higher pressures for short duration loads than for long duration loads. Recent research (8) indicates that the period of application of the peak pressures reported herein is about 5-10 seconds or less. If a glass design is based on these peak-pressure values, then a glass strength associated with this duration load should be used. Because glass design charts are normally based on some alternate load duration--usually one minute--then some reduction in peak loads should be made. An estimate of a load reduction factor can be obtained from an empirical relation of glass strength as a function of load duration. Current glass selection charts showing glass strength as a function of load duration (9) and older references (10) indicate the following load reduction factors:

	ref 9	ref 10
annealed float	0.80	0.81
heat strengthened	0.94	
tempered	0.97	0.98

Loadings appropriate for glass design can be computed by multiplying the peak-pressure loads of Table 6 by these load factors.

4.4 Forces and Moments

Force coefficients in the horizontal X and Y directions and moment coefficients about the X, Y, and Z axes with the origin at ground level at the base of the building with Z axis vertical may be computed for all wind directions tested by integration of mean pressures on the building. Overall forces and moments acting on the full-scale building due to wind loading which are useful in designing the structural framing of the proposed building may be obtained from use of these coefficients.

Force coefficients were computed for each floor for each wind direction using the equations shown below.

$$CF_X = \frac{F_X}{A_R \; 0.5 \; \rho \; U_\infty^{\;2}} \qquad CF_Y = \frac{F_Y}{A_R \; 0.5 \; \rho \; U_\infty^{\;2}}$$

Terms and symbols used in the equations are defined in the List of Symbols and the axes are defined for the building in Figure 3. Force coefficients CF_X and CF_Y were computed for the horizontal forces acting along the X and Y axes using the mean pressure coefficient at each pressure tap. A_R represents a constant reference area for nondimensionalization of the forces and moments.

The total forces acting on the full-scale building for each floor and wind direction were computed by multiplying the above coefficients by the appropriate full-scale reference area, by the reference pressure of Table 5, and by a gust load factor selected for an appropriate wind gust duration. The gust load factor, shown in Table 5, was selected to increase the loads from an hourly mean load to that of a gust whose duration would be sufficient for its effect to be fully felt by the structure. A table of gust load factors for various gust durations is

incorporated in Table 5 so that force and moment data of Table 7 may be adjusted to a different load duration if desired.

The forces obtained at each floor were used to obtain load, shear, and moment diagrams for the building for each wind direction. The shear diagram, in kips, was obtained by algebraic sum of all forces in each coordinate direction acting above the floor of interest. The load diagram, in psf, was obtained by dividing the shear values by their contributing areas (listed in Table 7). The moment diagram, in 1000 ft-kips, was obtained by integration of the shear values so that the moment due to forces acting above the floor level of interest was calculated. The sign of the moment was established by the right-hand rule about an X', Y' axis through the floor of interest. Moments about the Z axis were calculated by considering the displacement of forces in the X and Y directions from the Z axis shown in Figure 3.

5.0 DISCUSSION

5.1 Flow Visualization

Flow patterns identified with smoke showed no unusual characteristics about the upper portions of either tower although accelerated flow deflected from one tower was observed impinging on the other, a condition which could result in higher mean loading and higher local cladding loads on the downwind tower. Winds flowing down the face of each tower tended to concentrate under the lower floor insets to create high wind speeds at ground level under both towers. These flow patterns also have potential to create high local pressures on some lower surfaces and may cause objectionable pedestrian winds at some locations. Winds on top of the parking garage were strong over the 1/2 of the garage nearest the towers for several wind directions.

5.2 Pedestrian Winds

Figure 4 shows the 26 pedestrian locations selected for study. Location 1 was selected as a reference location which should be reasonably undisturbed by presence of the two towers. Locations 8, 9, 13, 15, 16, 20 and 25 were located under building overhangs. Table 2 and Figure 8 show that the largest values of mean velocity were measured at locations 13, 21 and 23, each of which showed mean velocities between 75 and 87 percent of the velocity at the top of the boundary layer, U_∞, for two or three approach wind directions. Reference location 1 had a maximum mean velocity of 34 percent of U_∞ while an open-country environment would have a mean wind velocity of about 45 percent of U_∞

The largest values of fluctuating velocity, U_{rms}, were between 20 and 28 percent of U_∞ measured at 10 of the 26 locations for at least one wind direction. The largest value at reference location 1 was 12 percent; a value

of 10-12 percent would be anticipated in an open-country environment. The largest values of effective peak wind, represented by the mean plus three rms as discussed in section 4.2, ranged between 120 and 132 percent of U_∞ and were measured at locations 13, 15, 18, 22, 23 and 24 for at least one wind direction. Locations 14, 21, 22 and 23 each had peak velocities above 100 percent of U_∞ for 4 or 5 approach wind directions. For comparison, reference location 1 had a largest peak of 68 percent of U_∞; an open-country environment would expect a peak of 80-85 percent of U_∞.

Velocity data of Table 2 integrated with local wind data is shown in Figure 9. Based on the data of this figure, the mean wind speeds at locations 9 and 13 will exceed the unacceptable criteria line for 40 to 50 percent of the time. Locations 20 and 23 will be unacceptable for mean winds about 10-20 percent of the time. These areas will be avoided by pedestrians; if possible, pedestrian pathways should be planned to avoid these areas. Other locations which exceed the acceptability criteria for a walking environment for a high percentage of time are locations 5, 6, 8, 10, 12, 14, 15, 16, 19, 20, 21, 22, 25 and 26.

The results of the pedestrian wind environment showed that the wind environment about the base of the two towers will be very windy--approaching an unacceptable level in places. If the blocks surrounding the towers develop in the future with tall structures, the pedestrian environment may improve somewhat with that development. However, the basic geometry of the towers is conducive to the direction of winds down the building face and under the structure at the base. The 1/2 of the top of the parking garage closest to the towers will be quite windy--the other half will be moderate.

5.3 Pressures

Table 6 shows the largest pressure coefficients and loads measured on the building for each pressure tap location. Configuration A in Table 6 and Appendix A represents data on Tower I while Configuration C represents data on Tower II (see Figure 4). Configuration B corresponds to data taken at selected taps for 2 degree increments in wind azimuth to insure that the largest peak values were identified. The largest peak pressure coefficients measured on the two towers were -3.2 measured at pressure taps 147 and 230 on Tower I for wind directions 240 and 110. These pressures were induced, in part, by wind velocity accelerated by the hotel to the west of Tower I (tap 147) and by Tower II (tap 230). The largest peak pressure coefficient on Tower II was -2.46 measured at tap 123 for wind direction 270. The presence of Tower I probably contributed to this pressure level. Figure 10 shows that typical peak cladding pressures were between 30 and 50 psf for a 50-yr recurrence wind.

REFERENCES

1. Cermak, J. E., "Laboratory Simulation of the Atmospheric Boundary Layer," AIAA Jl., Vol. 9, September 1971.

2. Cermak, J. E., "Applications of Fluid Mechanics to Wind Engineering," A Freeman Scholar Lecture, ASME Jl. of Fluids Engineering, Vol. 97, No. 1, March 1975.

3. Cermak, J. E., "Aerodynamics of Buildings," Annual Review of Fluid Mechanics, Vol. 8, 1976, pp. 75-106.

4. Penwarden, A. D., and Wise, A. F. E., "Wind Environment Around Buildings," Building Research Establishment Report, HMSO, 1975.

5. Melbourne, W. H., "Criteria for Environmental Wind Conditions," Jl. Industrial Aerodynamics, vol. 3, pp. 241-247, 1978.

6. American National Standards Institute, "American National Standard Building Code Requirements for Minimum Design Loads in Buildings and Other Structures," ANSI Standard A58.1, 1972.

7. Hollister, S. C., "The Engineering Interpretation of Weather Bureau Records for Wind Loading on Structures," Building Science Series 30--Wind Loads on Buildings and Structures, National Bureau of Standards, pp. 151-164, 1970.

8. Peterka, J. A., and Cermak, J. E., "Peak-Pressure Duration in Separated Regions on a Structure," U.S.-Japan Research Seminar on Wind Effects on Structures, Kyoto, Japan, 9-13 September 1974; Report CEP74-75JAP-JEC8, Fluid Mechanics Program, Colroado State University, September 1974.

9. PPG Glass Thickness Recommendations to Meet Architects' Specified 1-Minute Wind Load, Pittsburgh Plate Glass Industries, April 1979.

10. Shand, E. B., "Glass Engineering Handbook," Second Edition, McGraw-Hill, New York, p. 51, 1958.

FIGURES

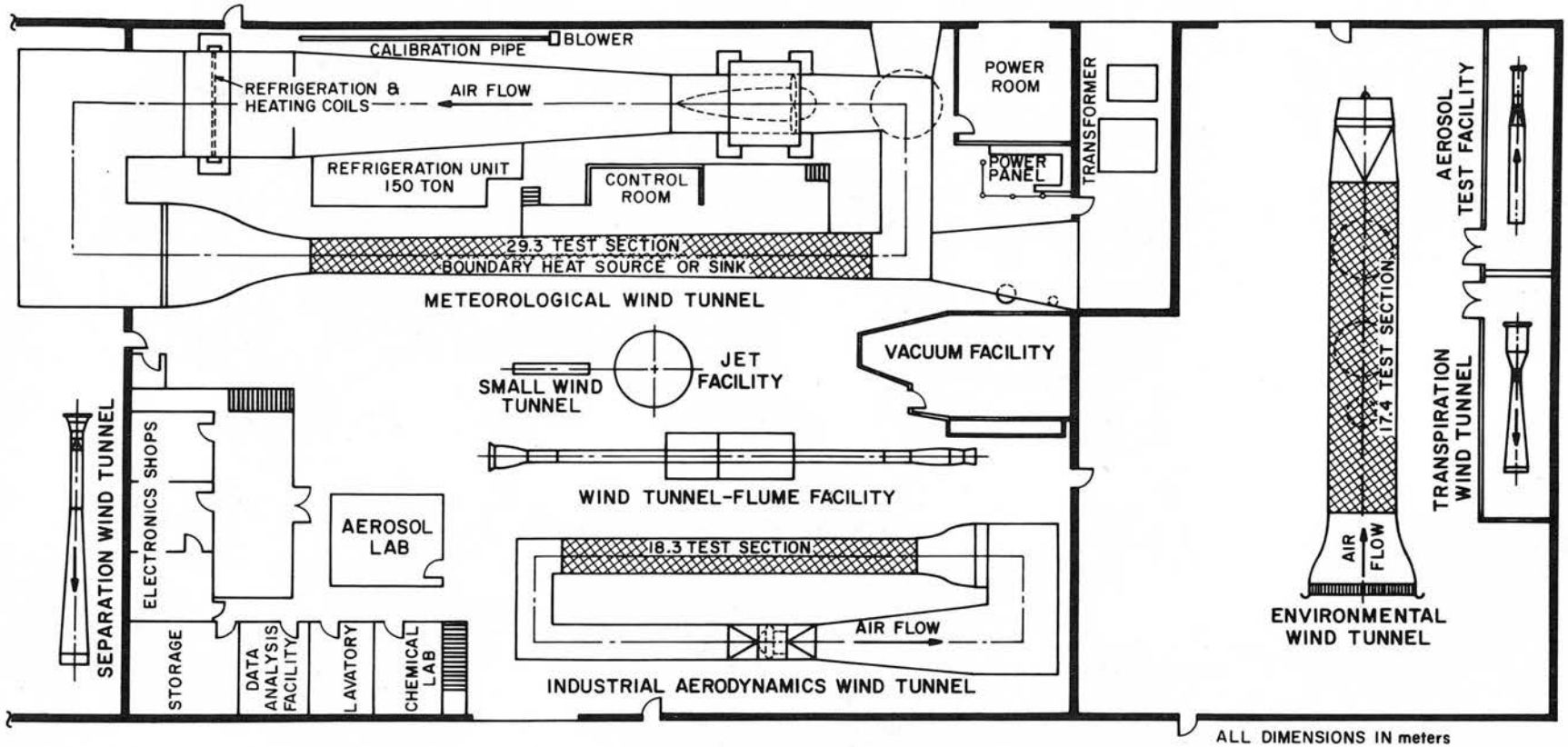

FIGURE 1 - FLUID DYNAMICS AND DIFFUSION LABORATORY
COLORADO STATE UNIVERSITY

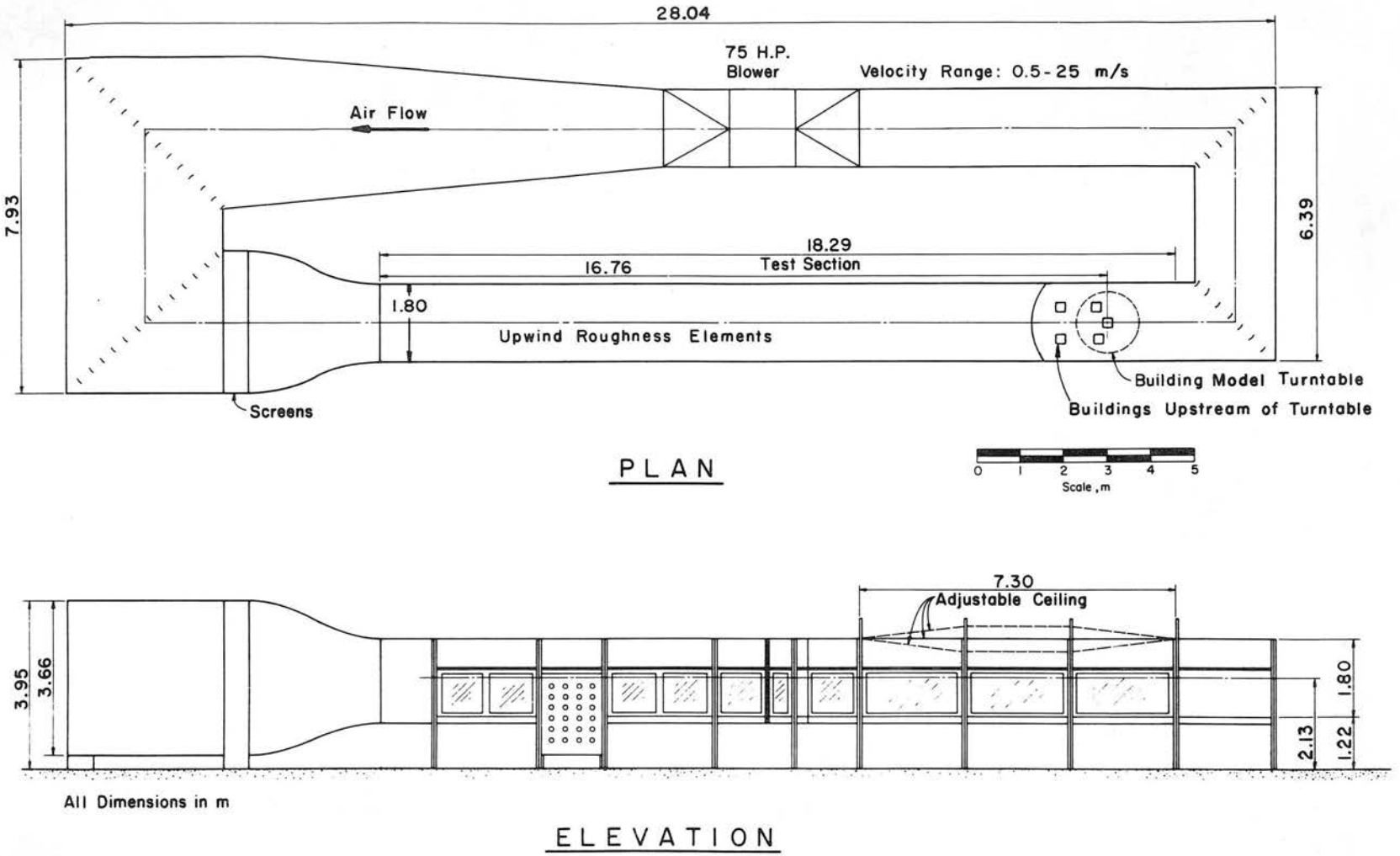

INDUSTRIAL AERODYNAMICS WIND TUNNEL PHASE I BUILDING

Figure 2 - Wind Tunnel Configuration

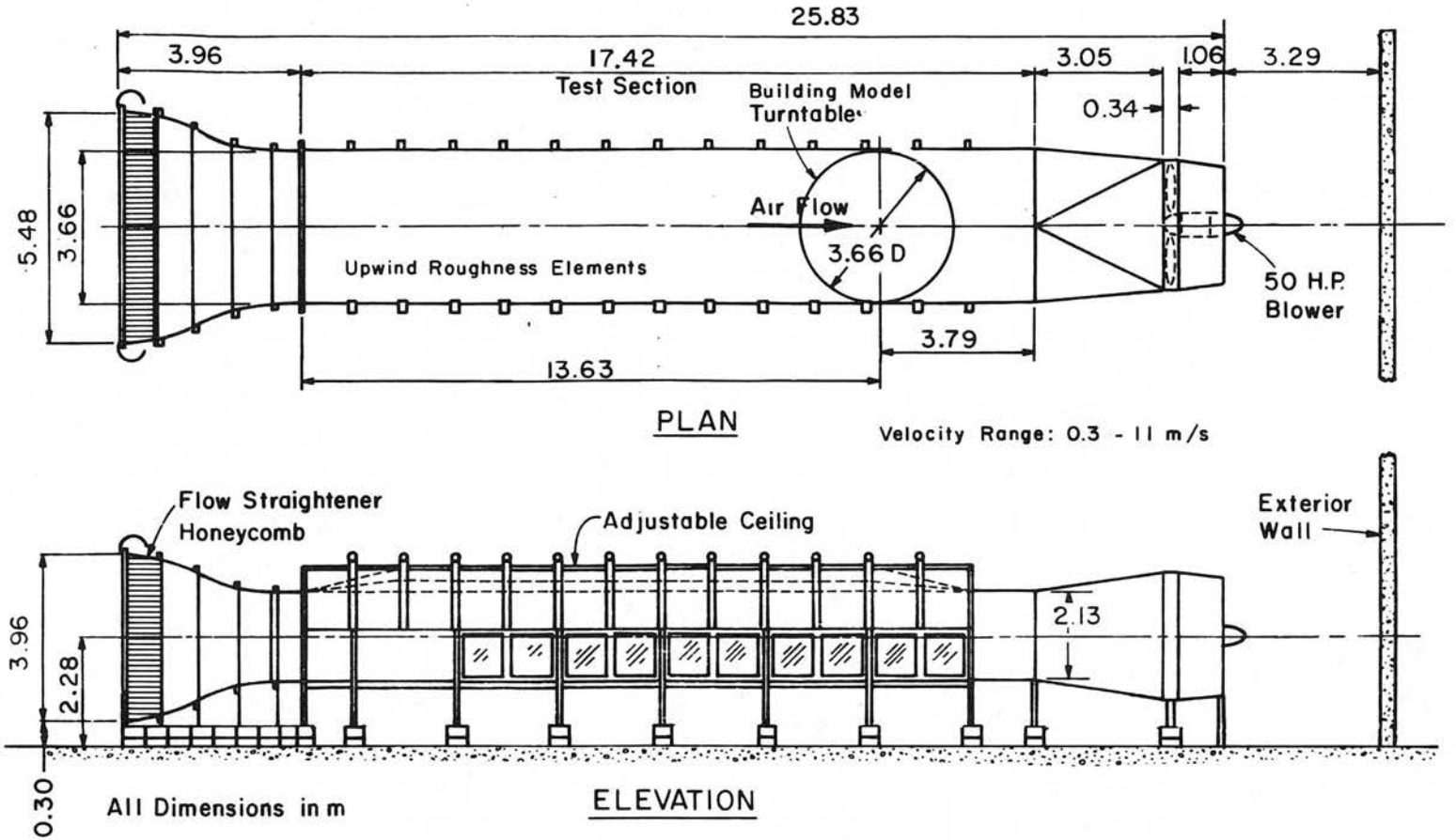

ENVIRONMENTAL WIND TUNNEL PHASE II BUILDING

Figure 2 - Wind Tunnel Configuration

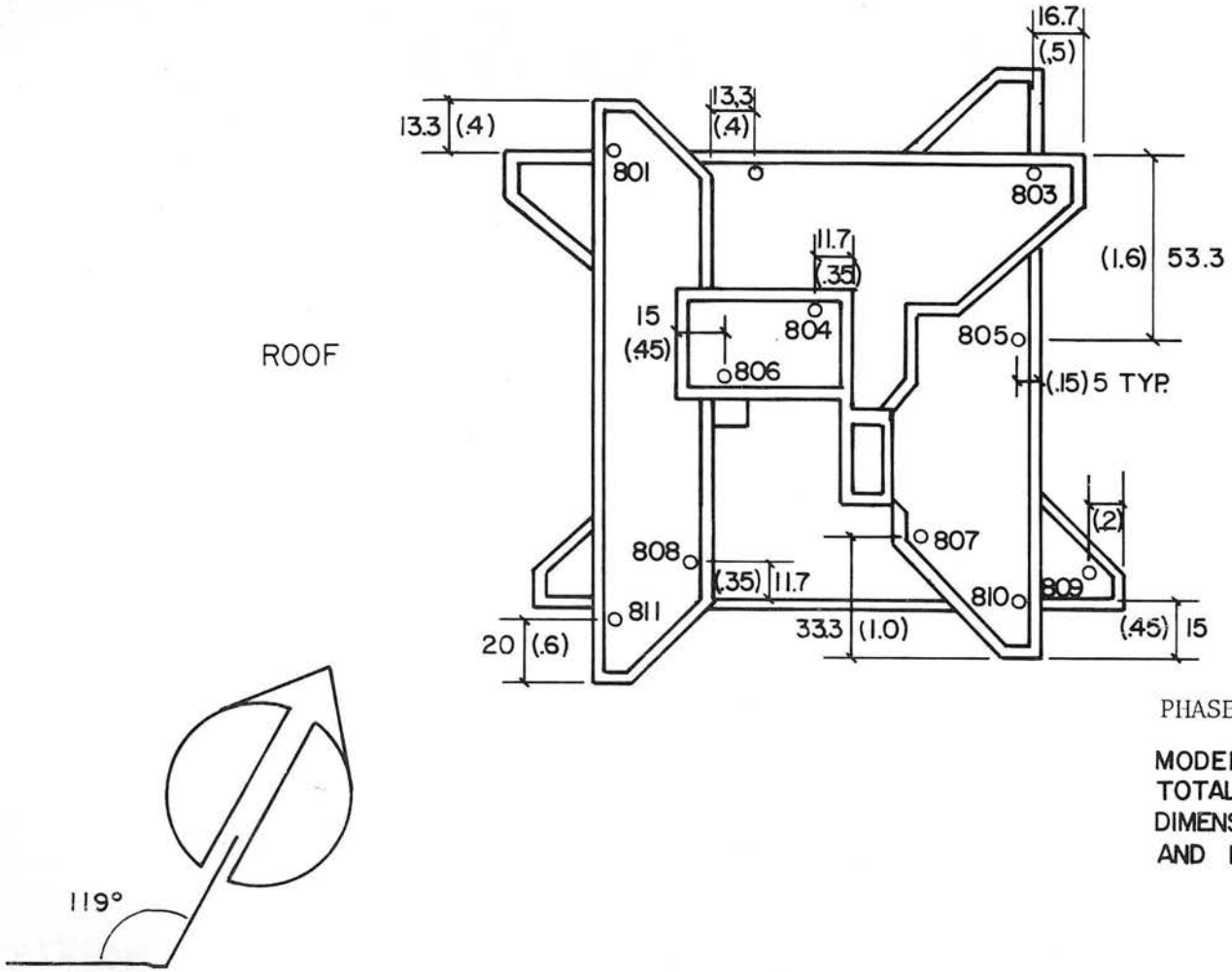

PHASE I

MODEL SCALE = 1/400
TOTAL TAPS = 333
DIMENSIONS IN FULL SCALE FEET
AND MODEL INCHES.

Figure 3a. Pressure Tap Locations

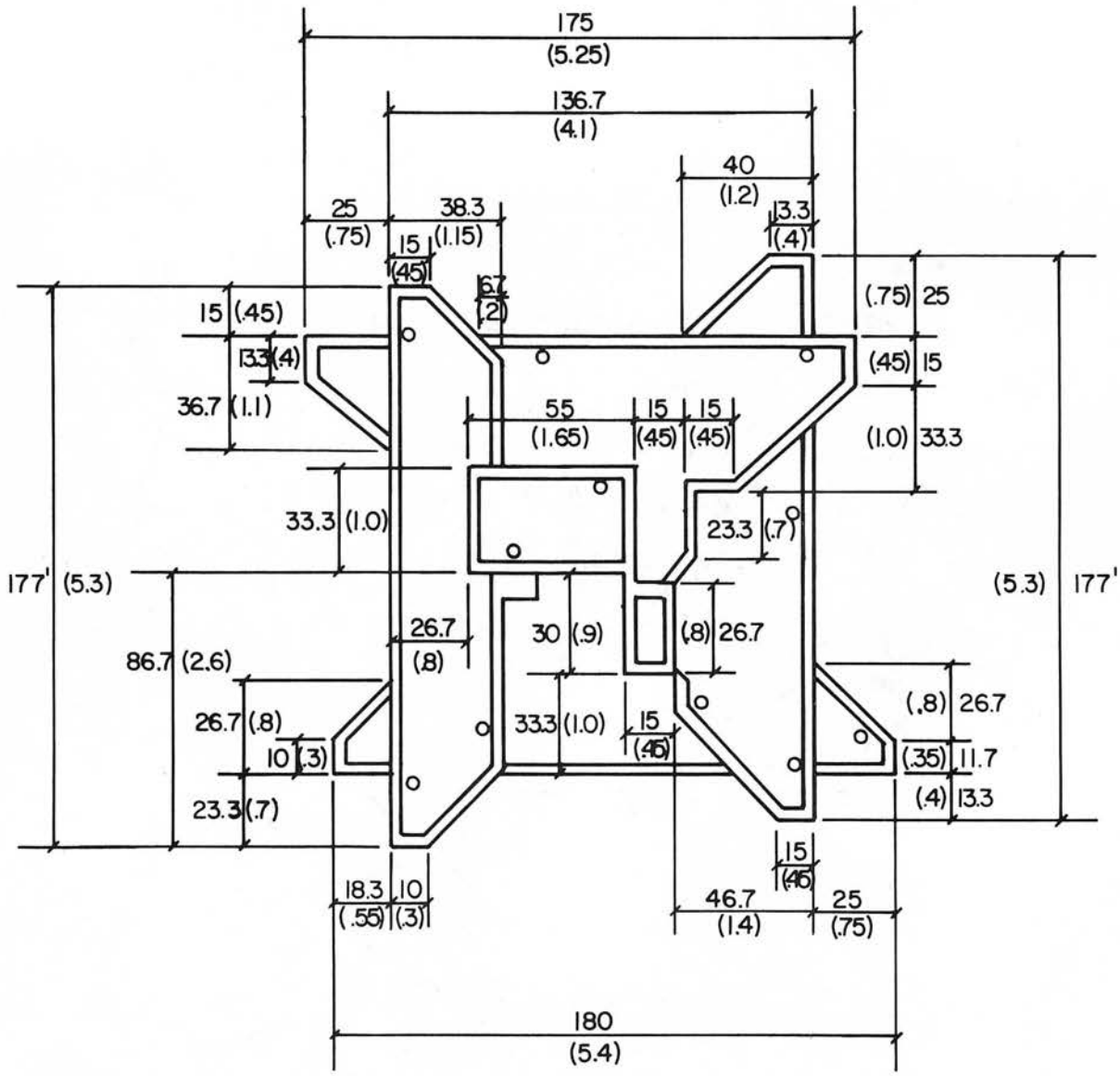

PHASE I

Figure 3b. Pressure Tap Locations

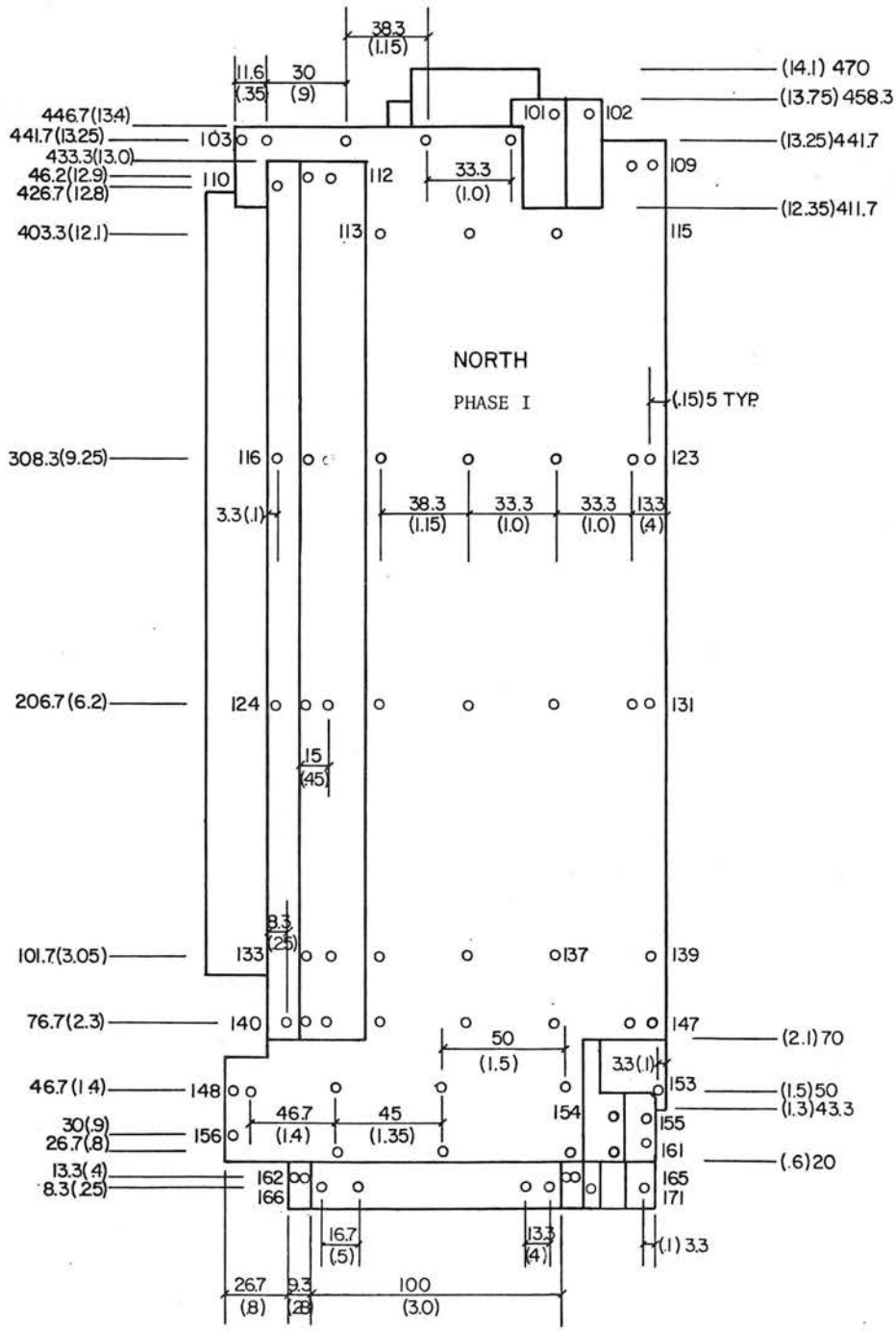

Figure 3c. Pressure Tap Locations

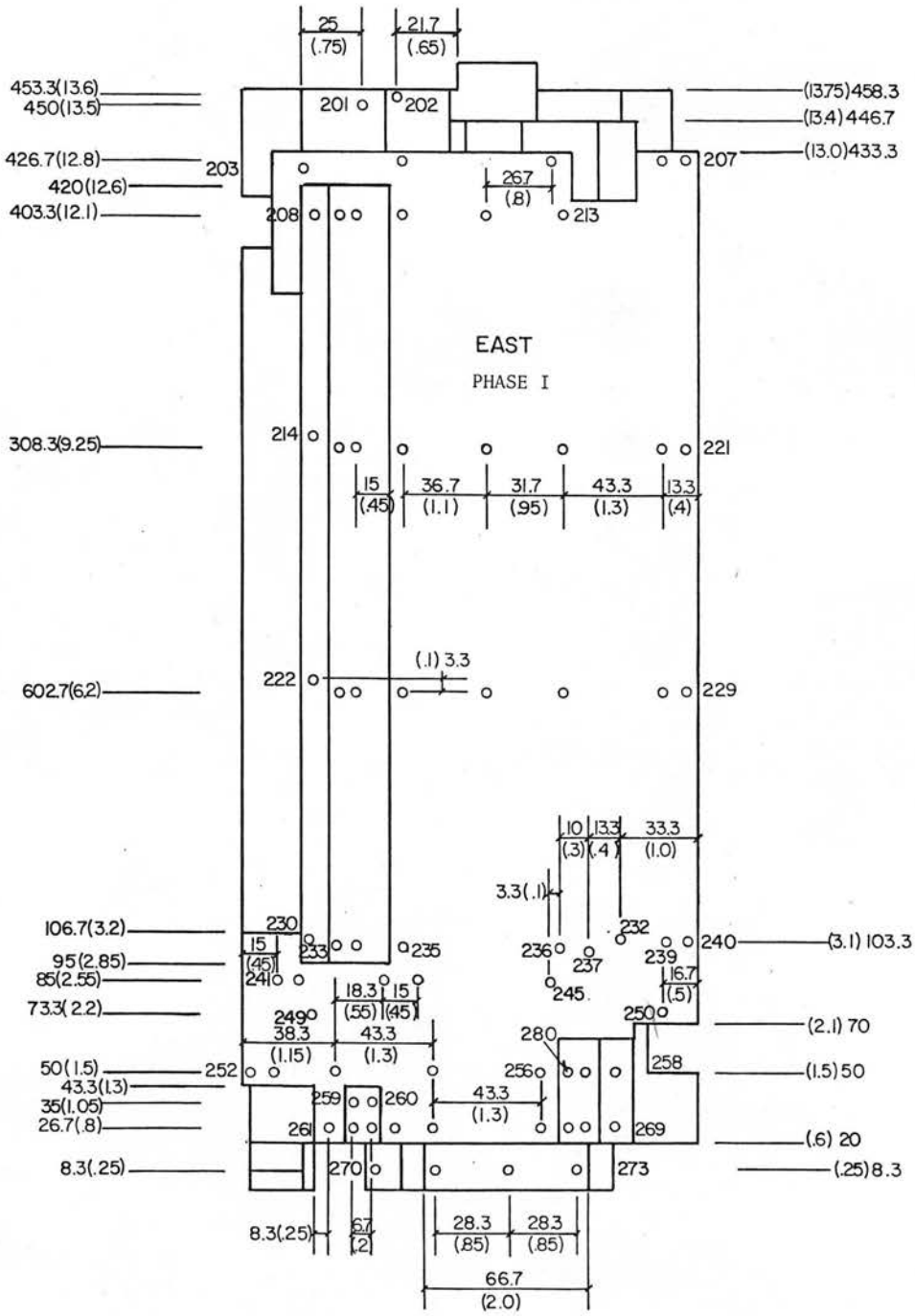

Figure 3d. Pressure Tap Locations

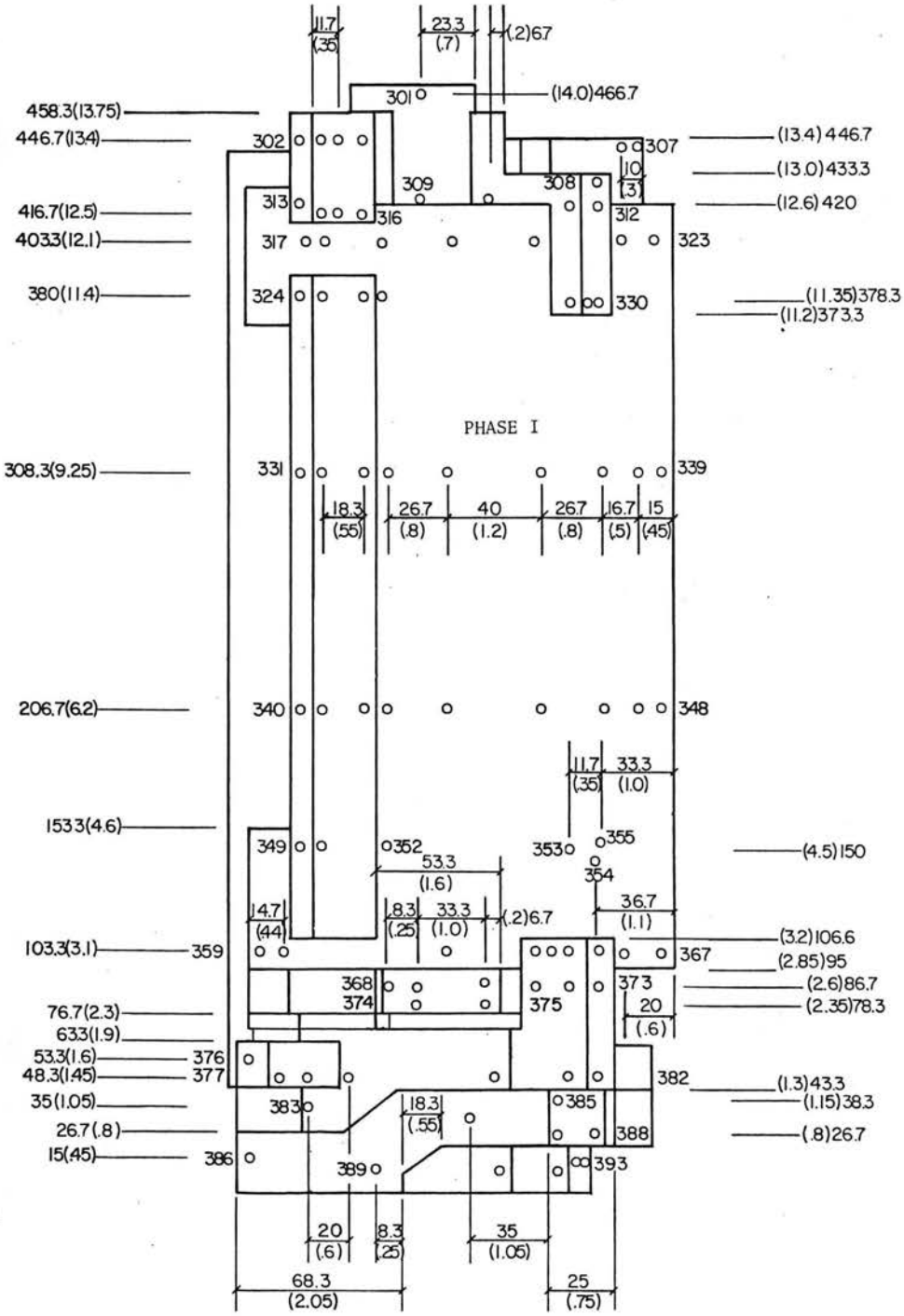

Figure 3e. Pressure Tap Locations

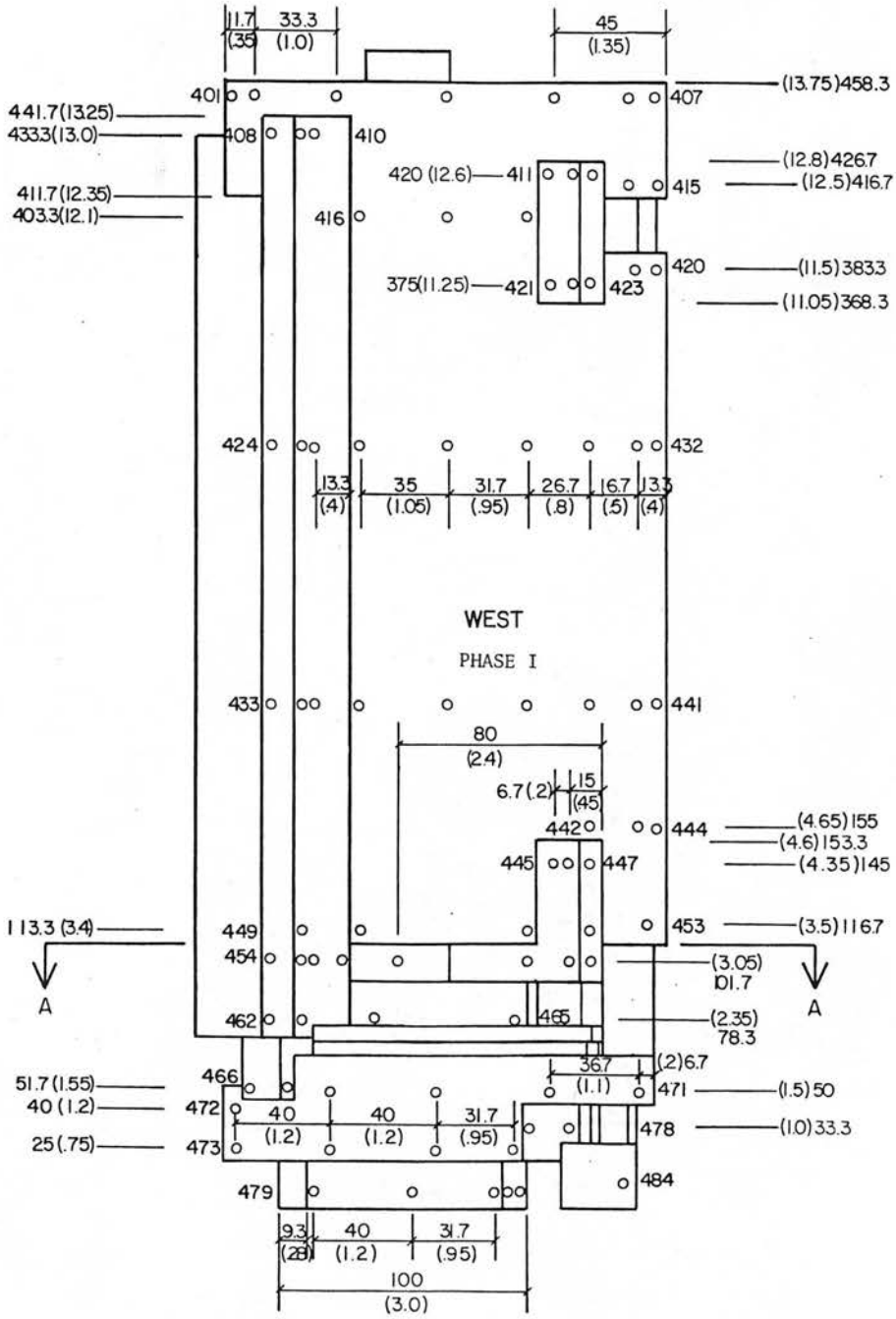

Figure 3f. Pressure Tap Locations

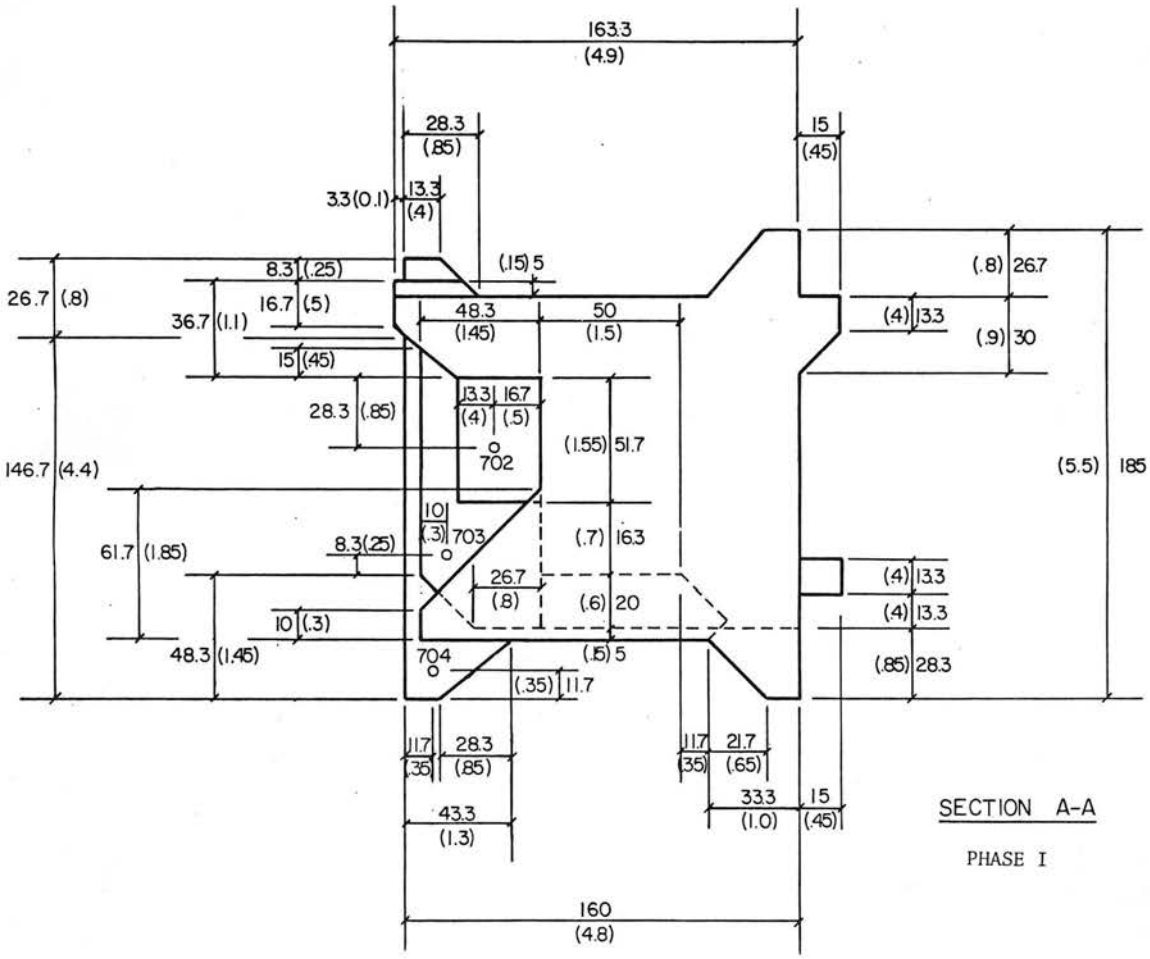

Figure 3g. Pressure Tap Locations

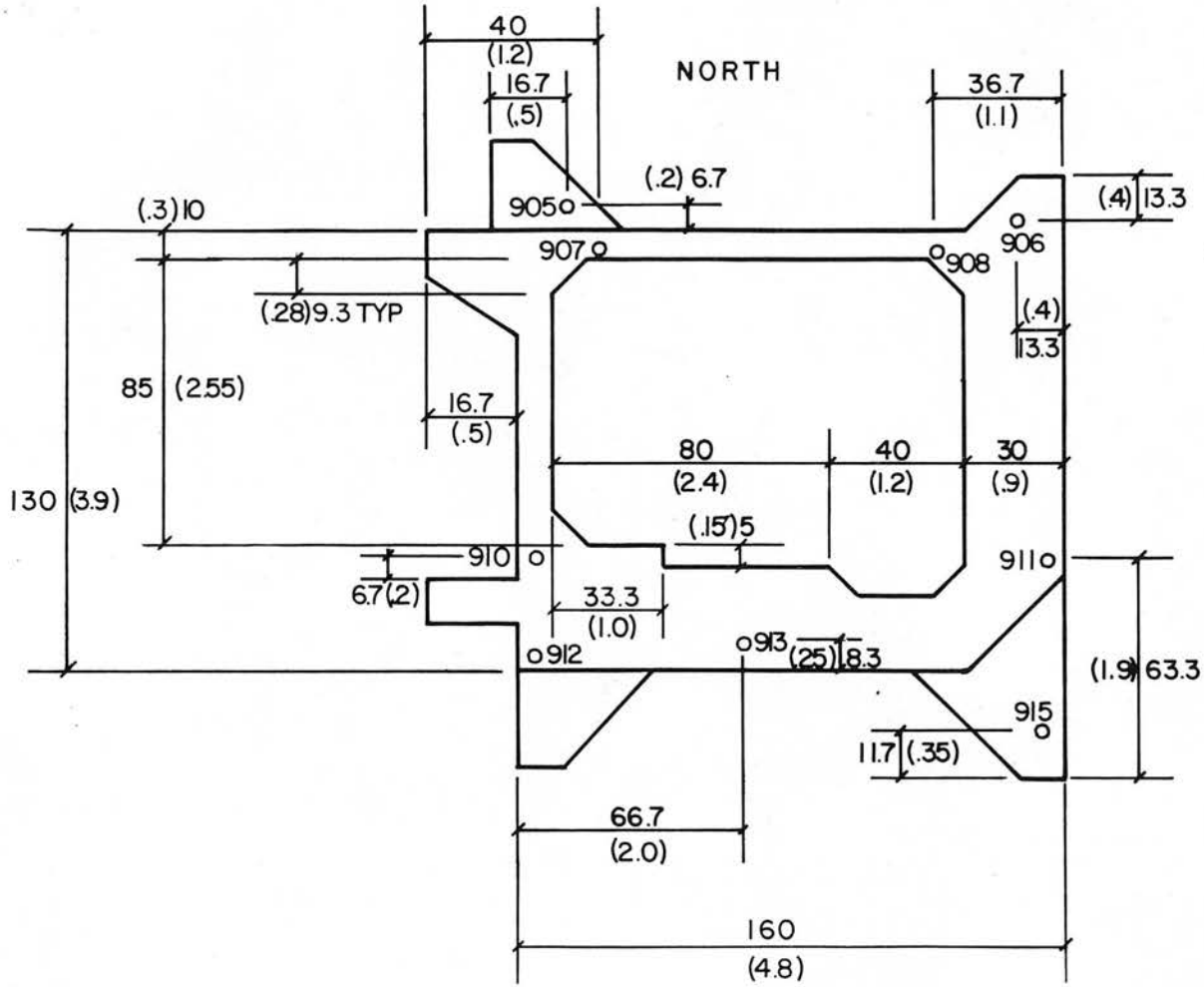

BOTTOM VIEW
(LOOKING UP)

PHASE I

Figure 3h. Pressure Tap Locations

NOTE:
UNLESS OTHERWISE NOTED THE DIMENSIONS OF PHASE II ARE IDENTICAL TO THOSE OF PHASE I.

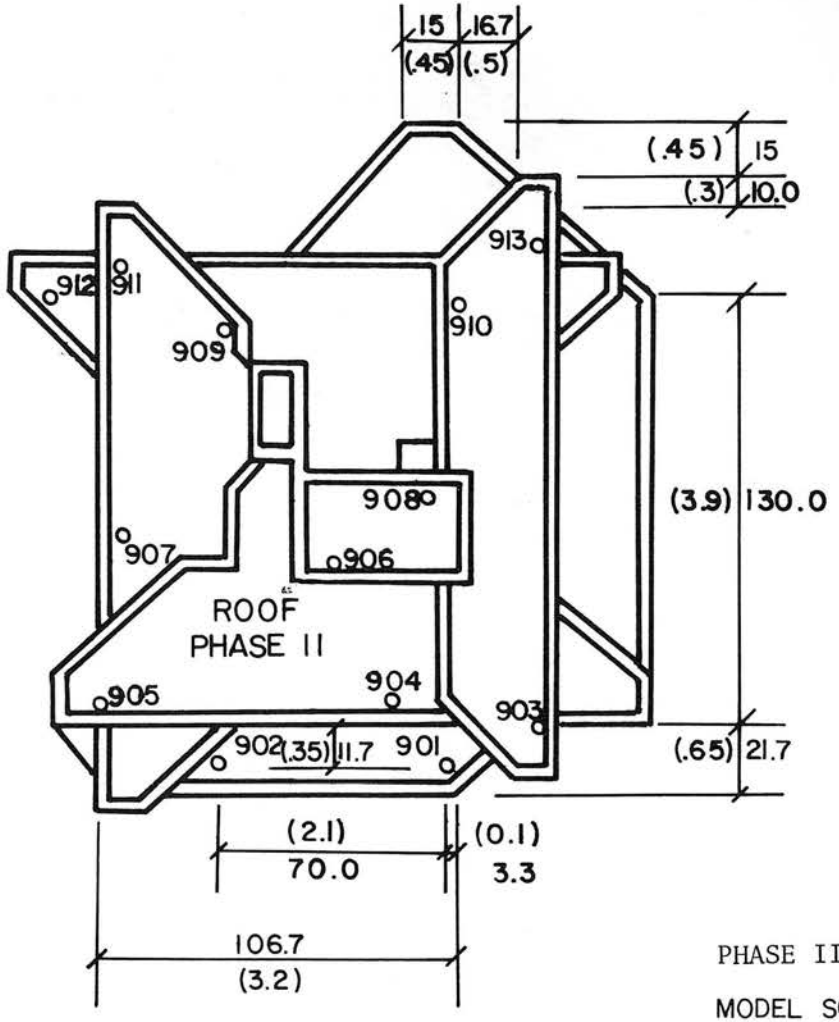

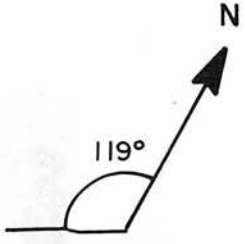

PHASE II

MODEL SCALE = 1/400
TOTAL TAPS = 326
DIMENSIONS IN FULL SCALE FEET AND MODEL INCHES.

Figure 3i. Pressure Tap Locations

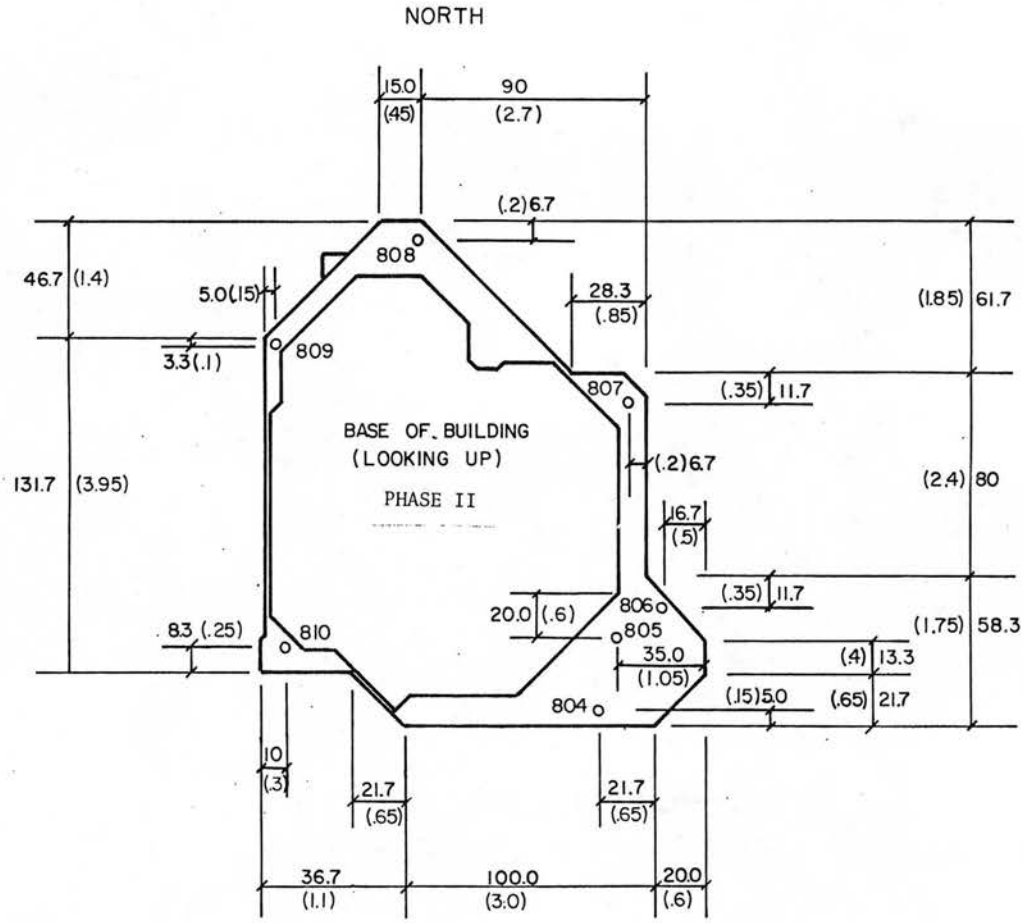

Figure 3j. Pressure Tap Locations

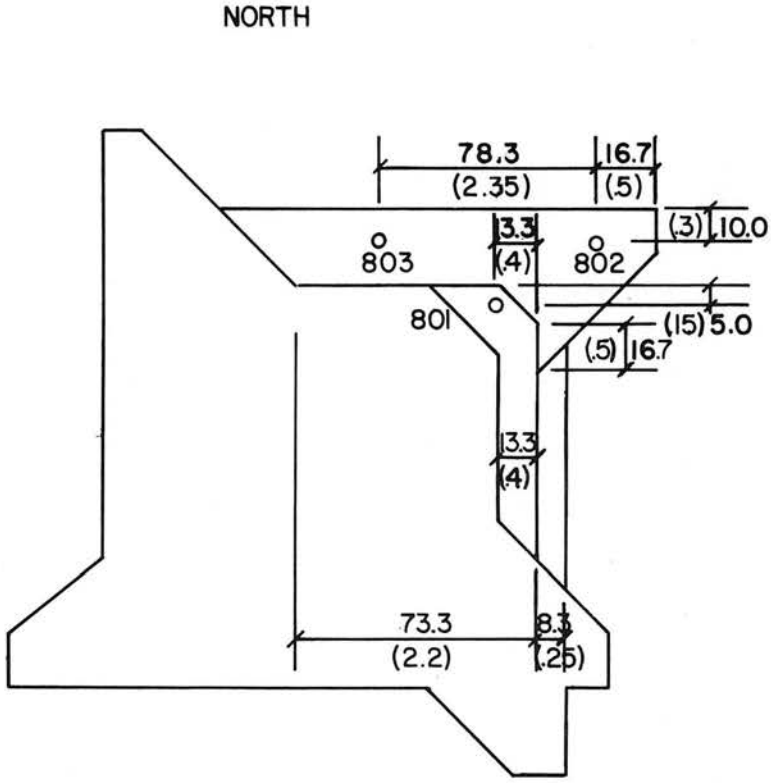

SECTION A-A

PHASE II

Figure 3k. Pressure Tap Locations

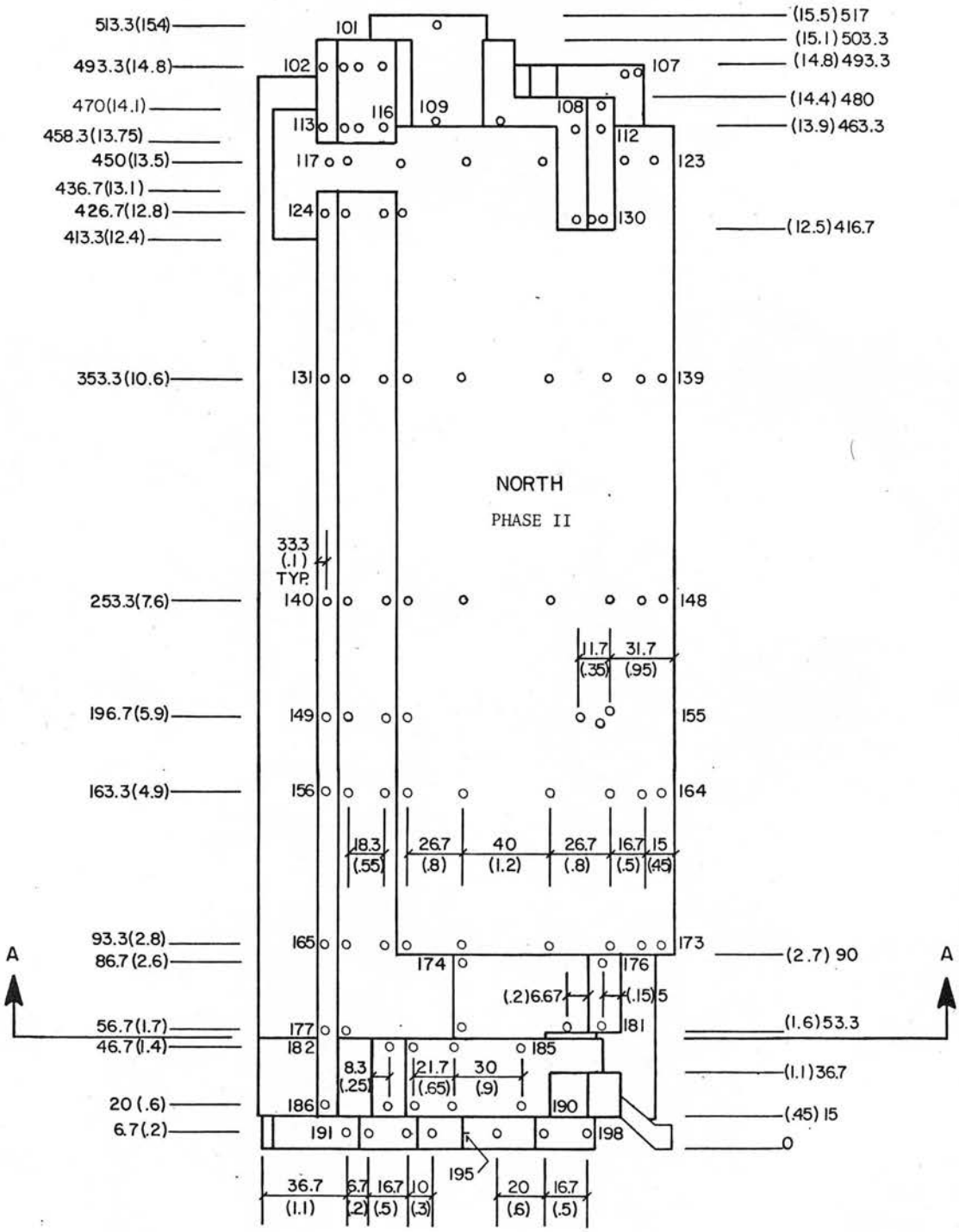

Figure 31. Pressure Tap Locations

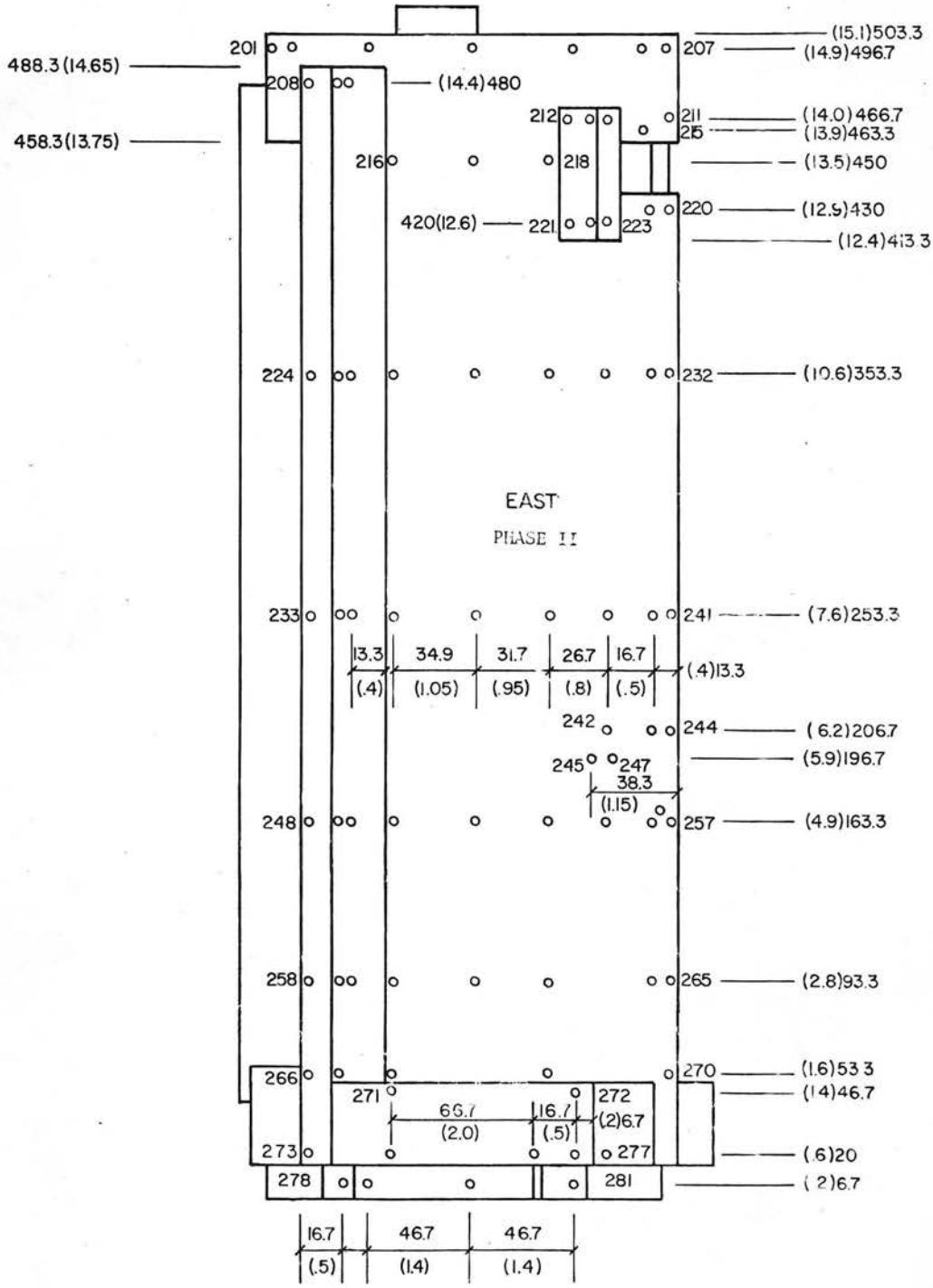

Figure 3m. Pressure Tap Locations

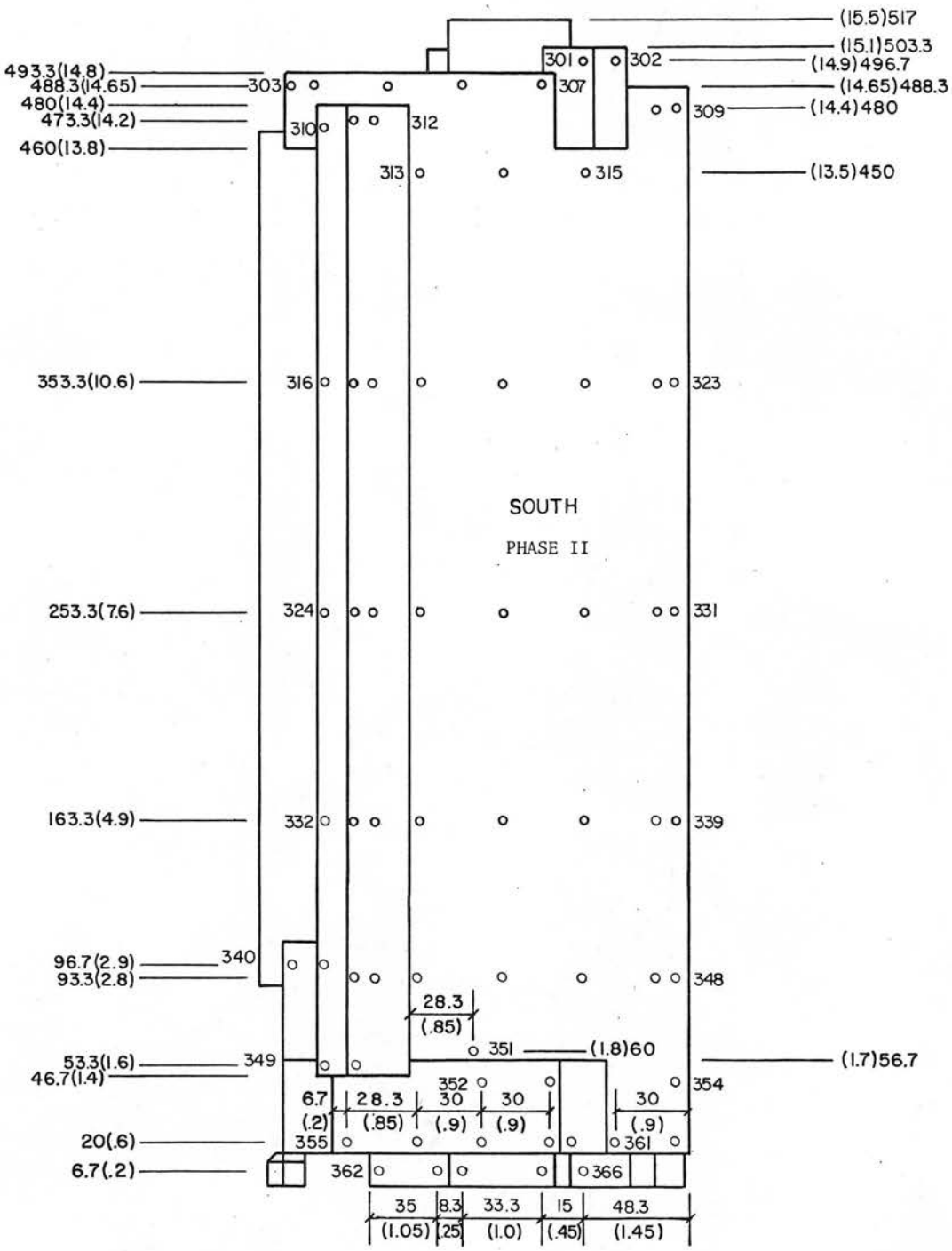

Figure 3n. Pressure Tap Locations

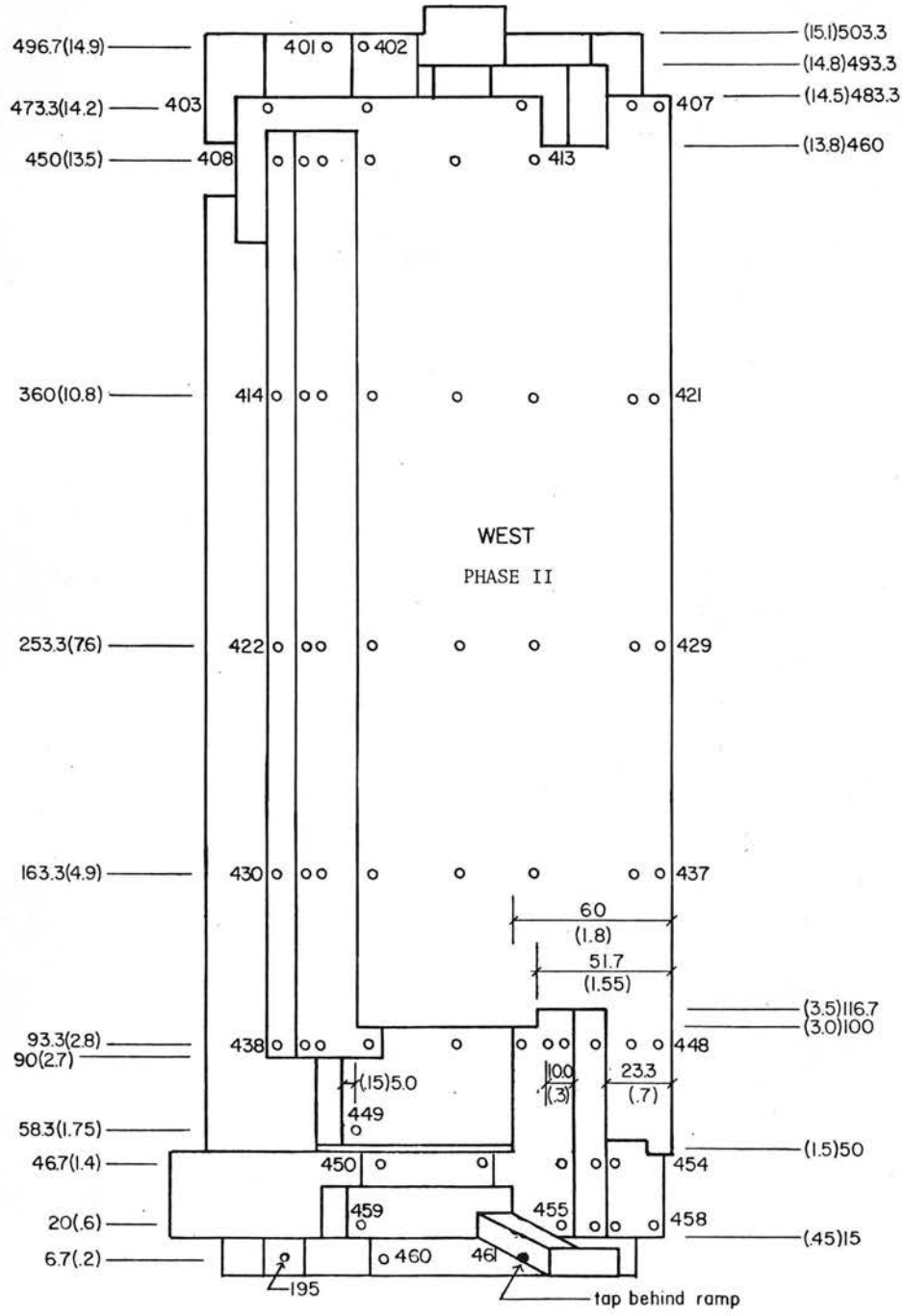

Figure 3o. Pressure Tap Locations

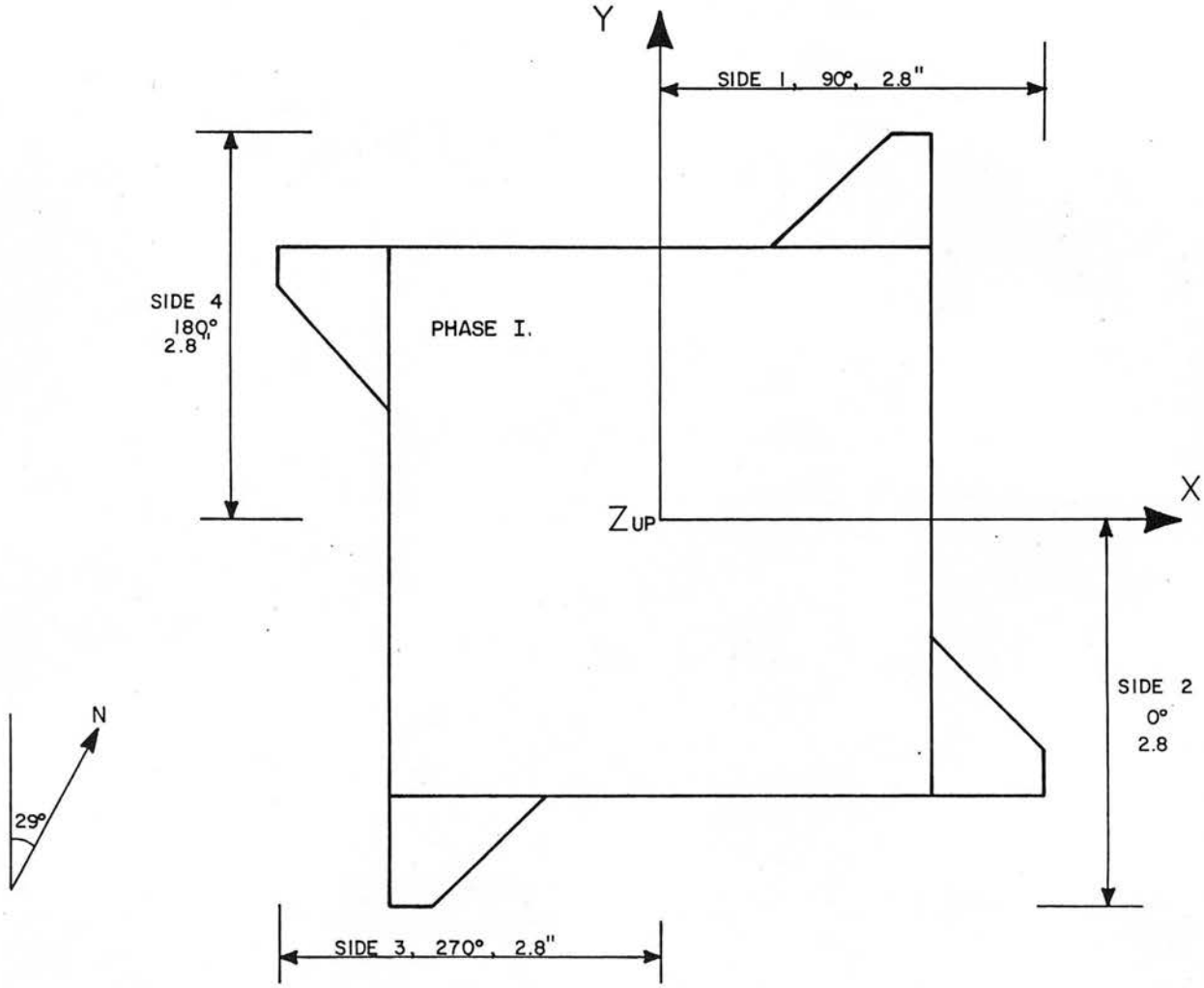

Figure 3p. Force and Moment Coordinate System

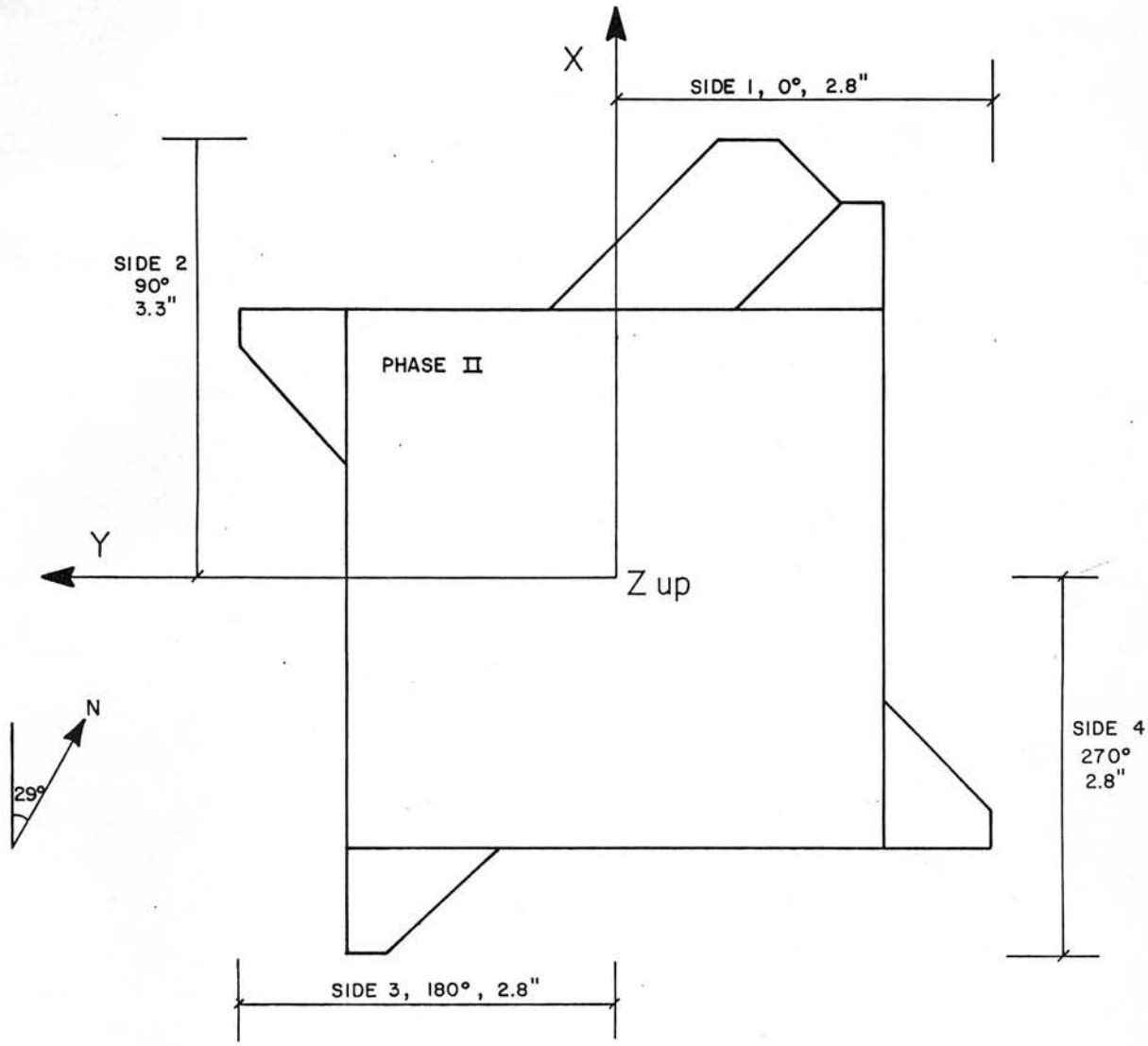

Figure 3q. Force and Moment Coordinate System

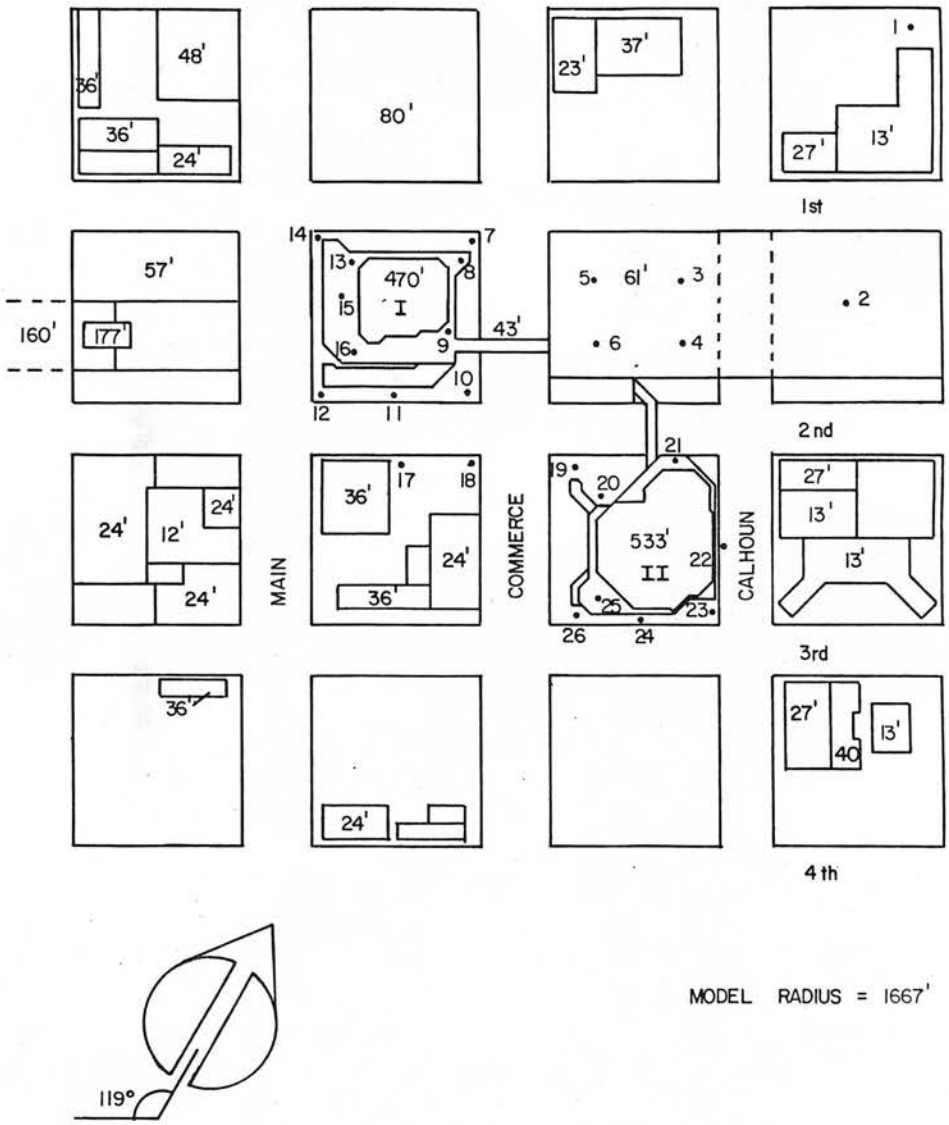

Figure 4. Building Location and Pedestrian Wind Velocity Measuring Positions

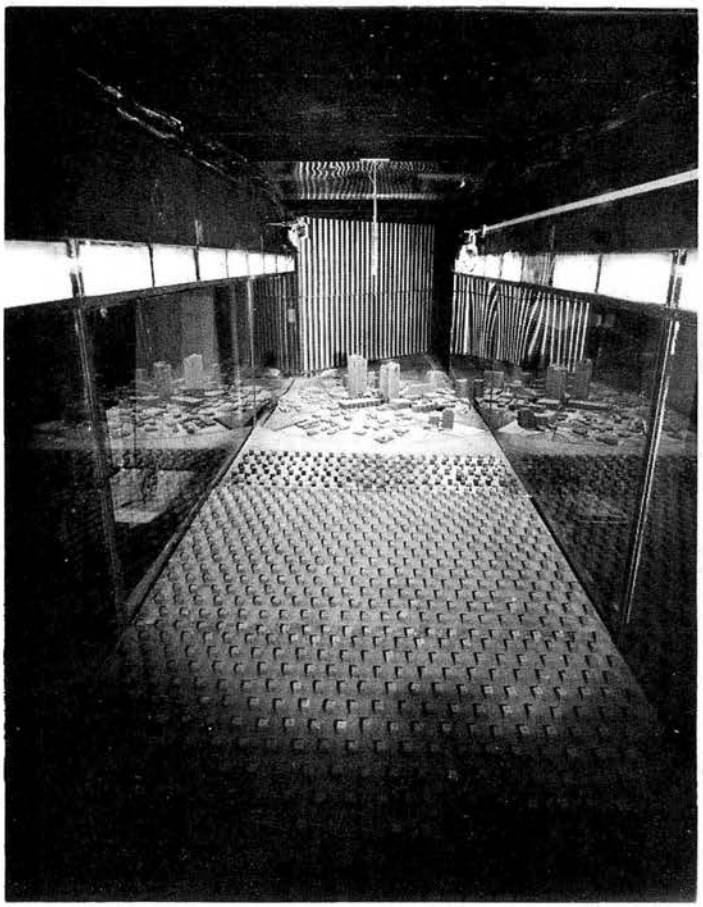

Figure 5. Completed Model in Wind Tunnel

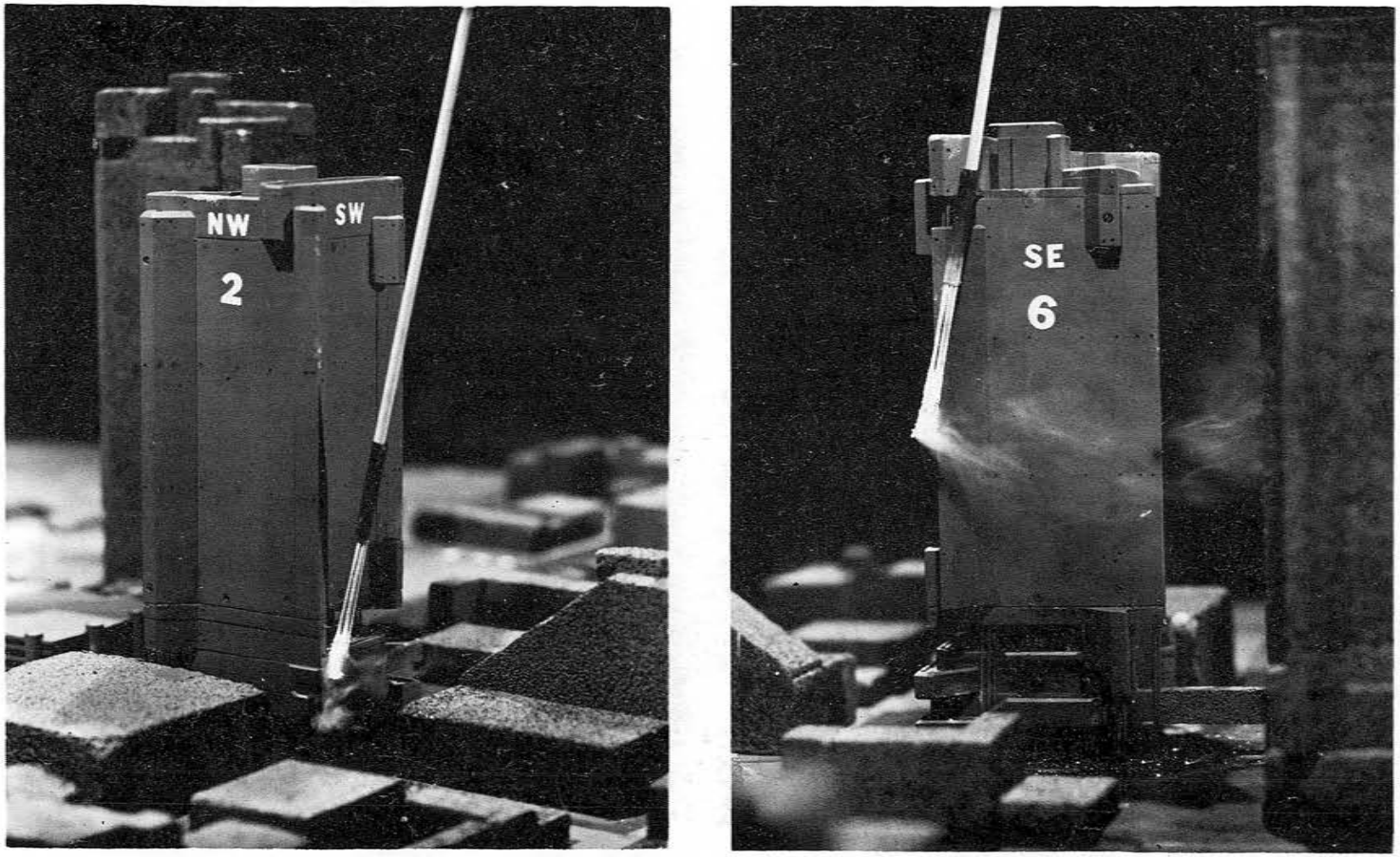

Figure 5. Completed Model in Wind Tunnel

Figure 5. Completed Model in Wind Tunnel

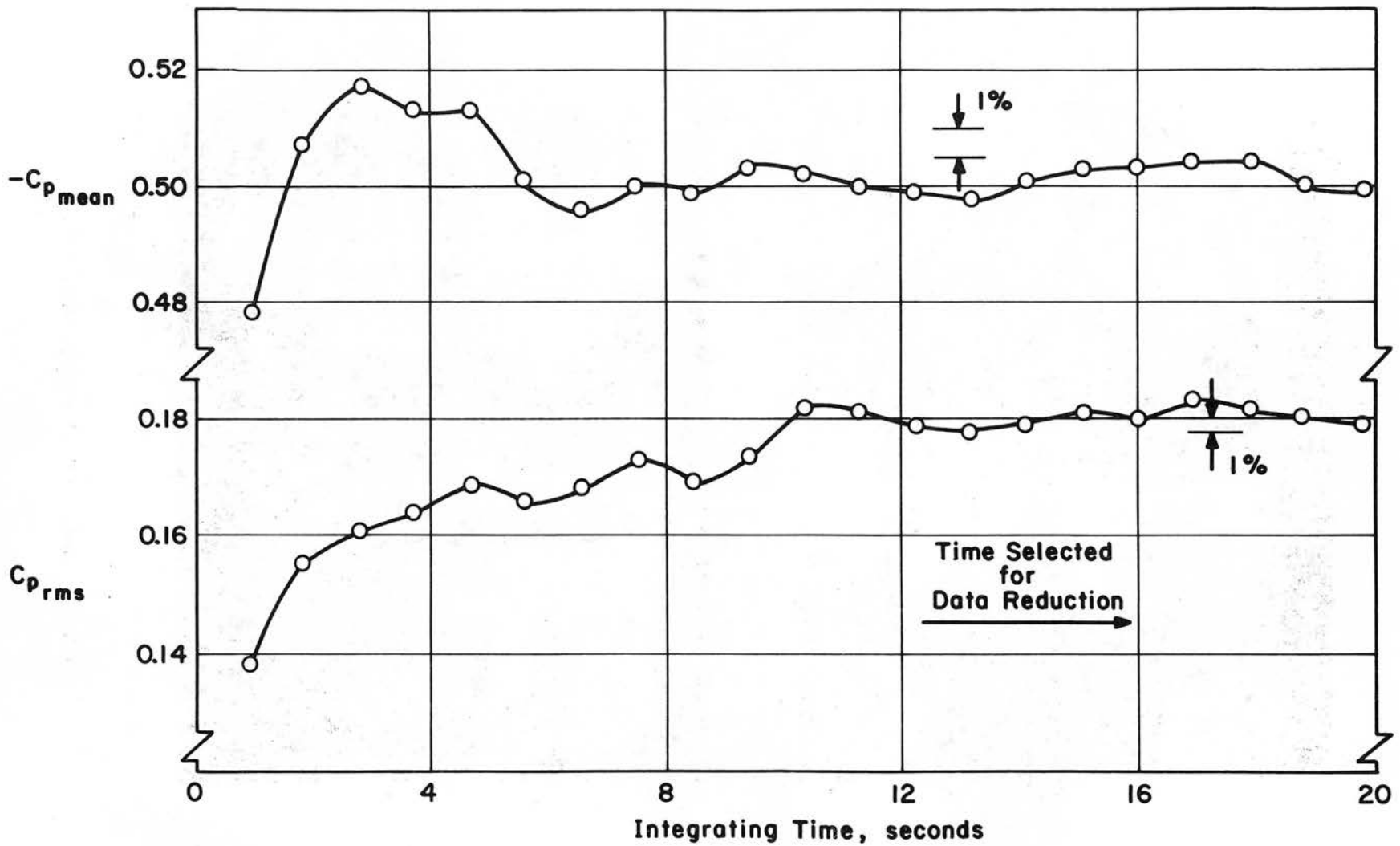

Figure 6 - Data Sampling Time Verification

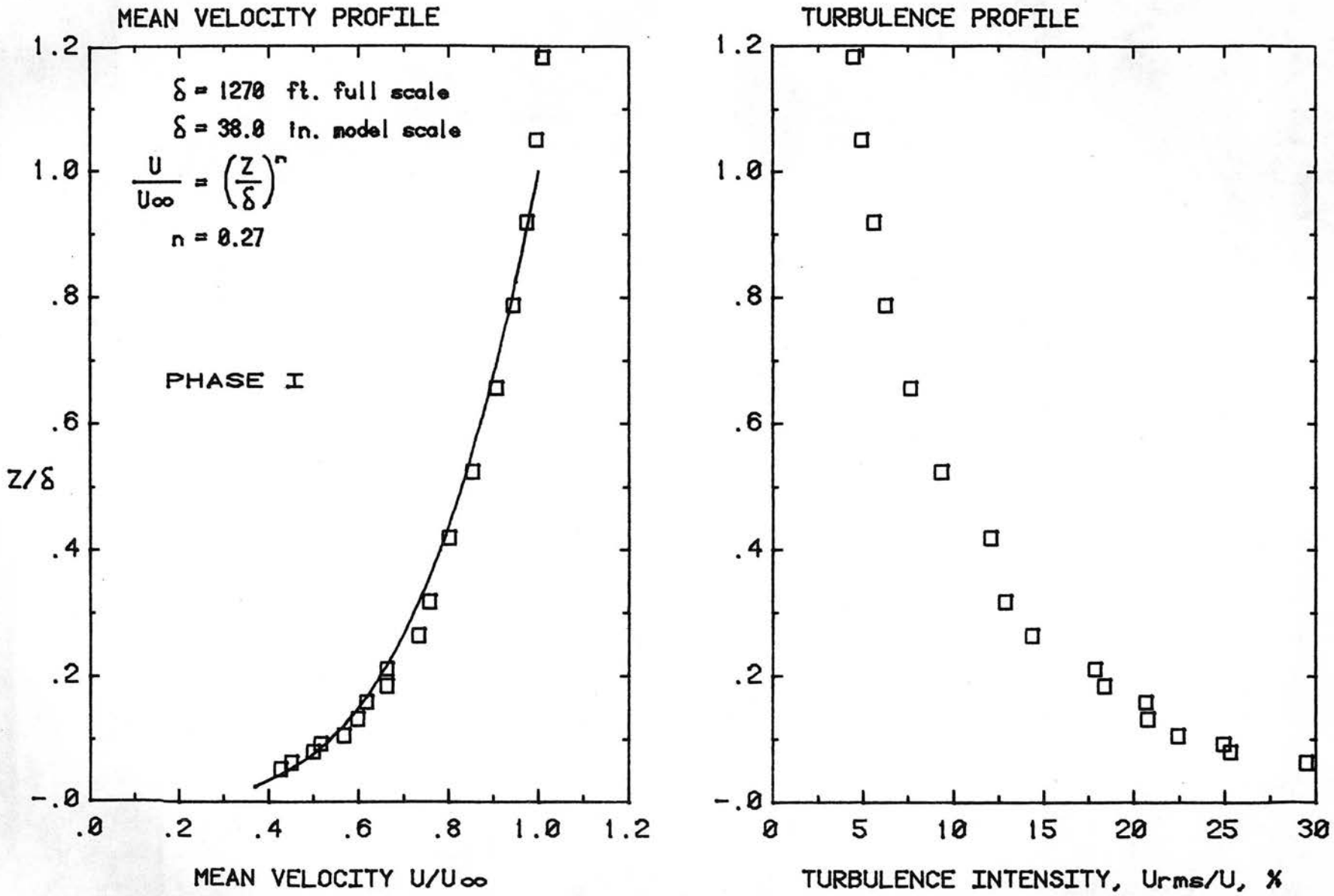

Figure 7. Mean Velocity and Turbulence Profiles Approaching the Model.

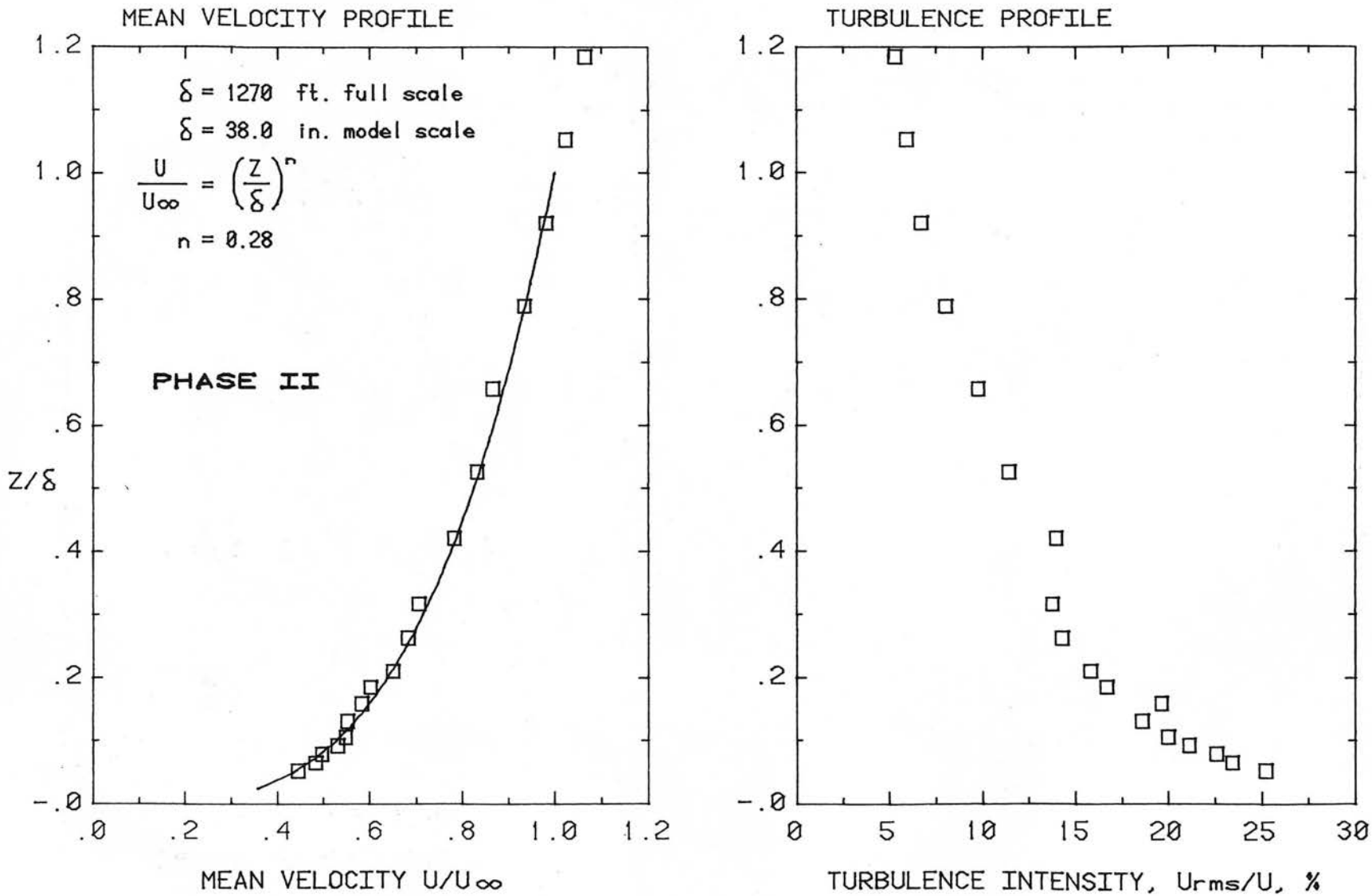

Figure 7. Mean Velocity and Turbulence Profiles Approaching the Model.

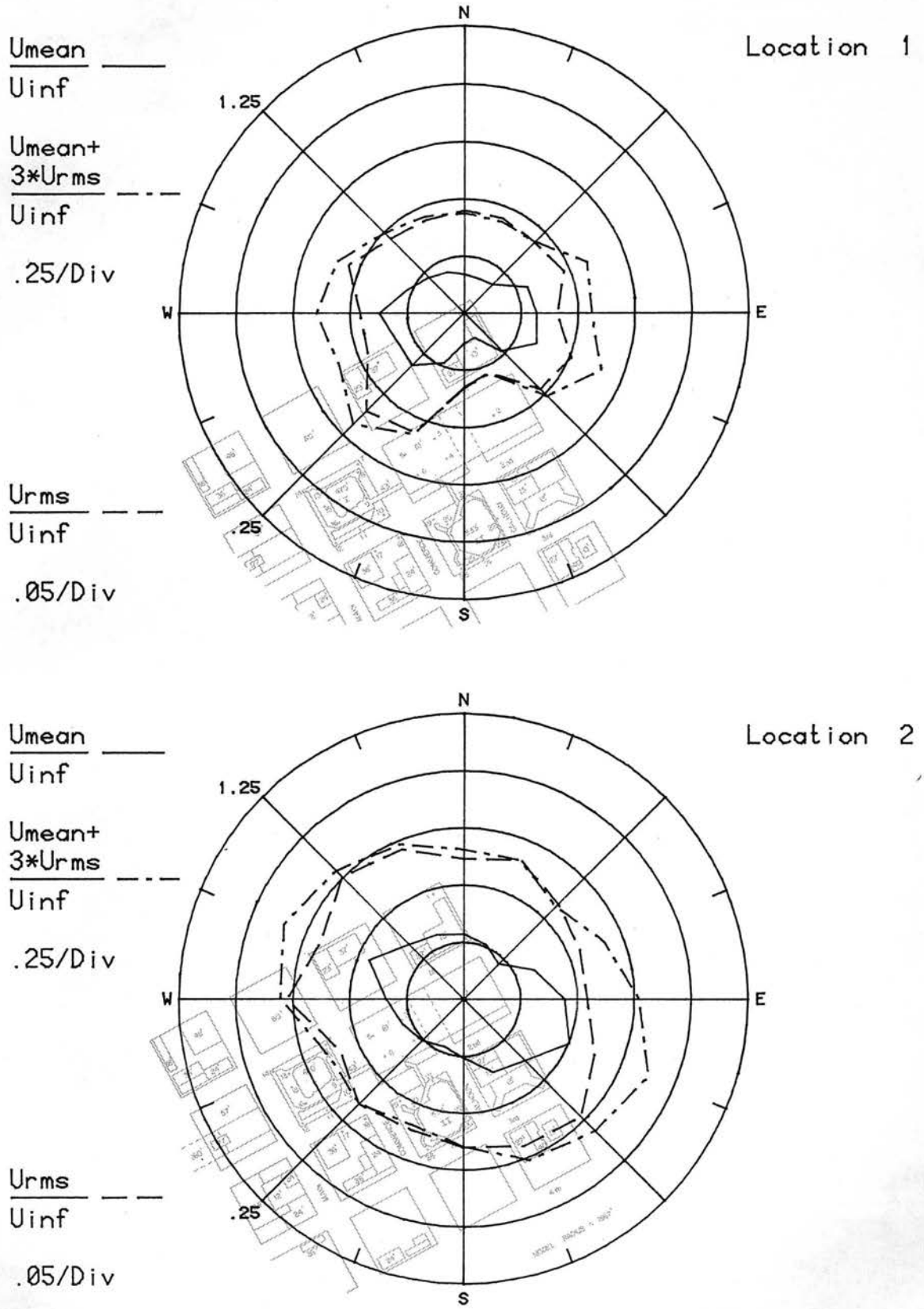

Figure 8a. Mean Velocities and Turbulence Intensities at Pedestrian Locations 1 and 2

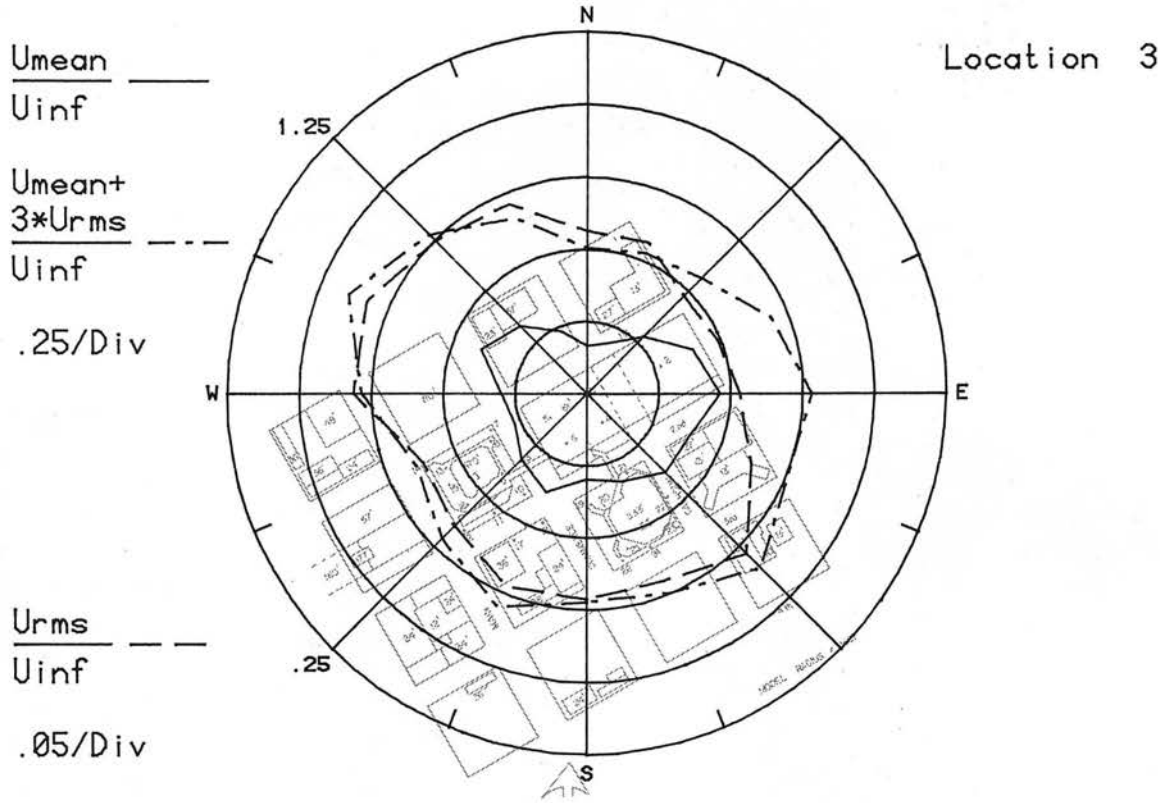

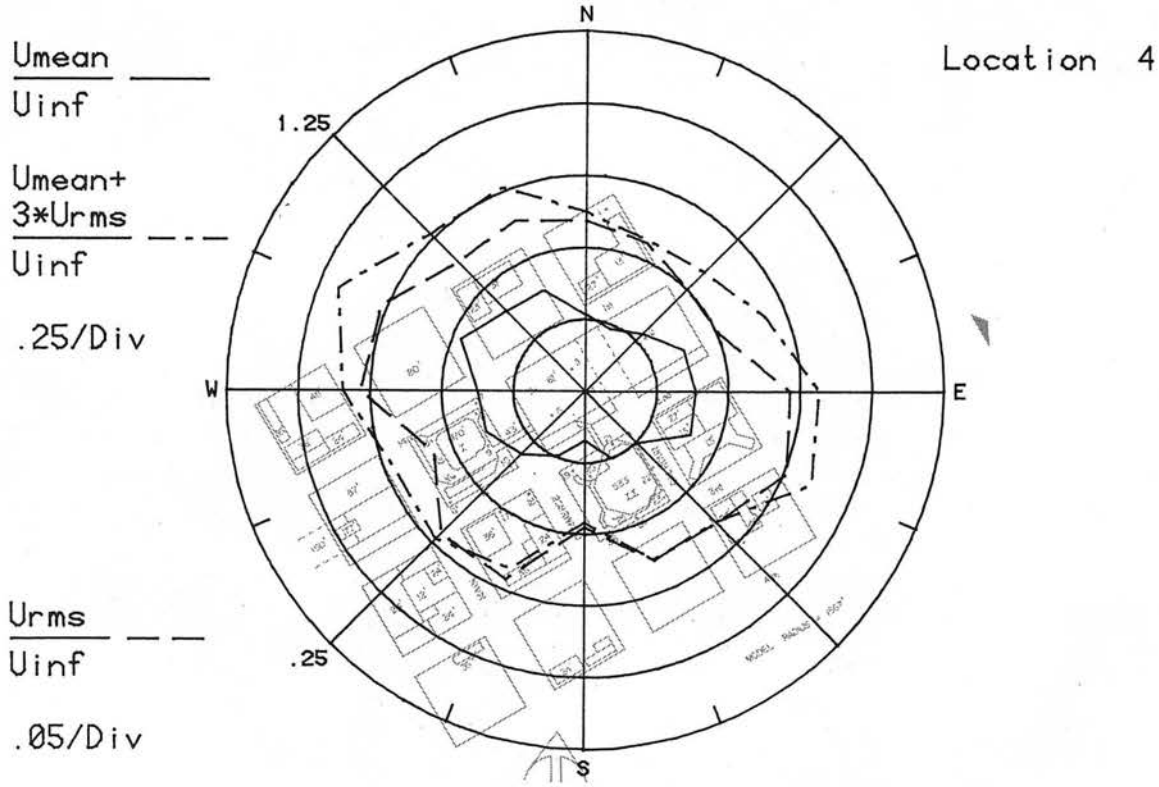

Figure 8b. Mean Velocities and Turbulence Intensities at Pedestrian Locations 3 and 4

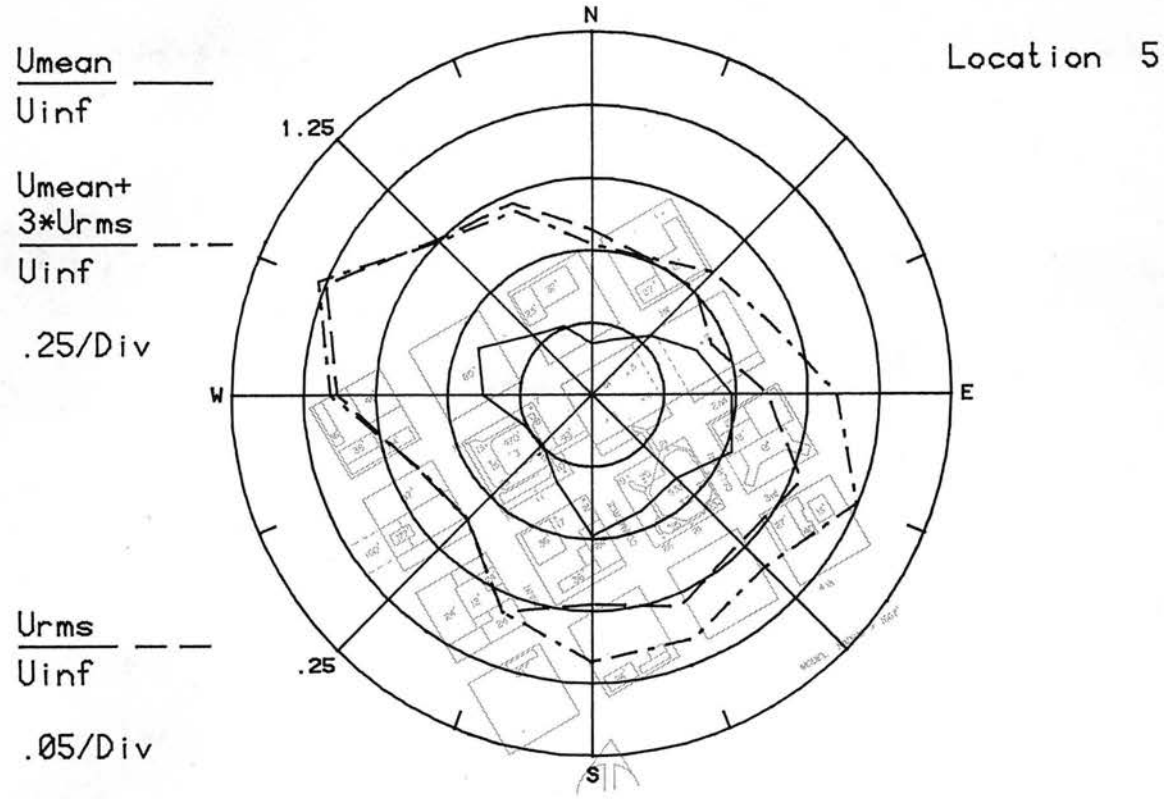

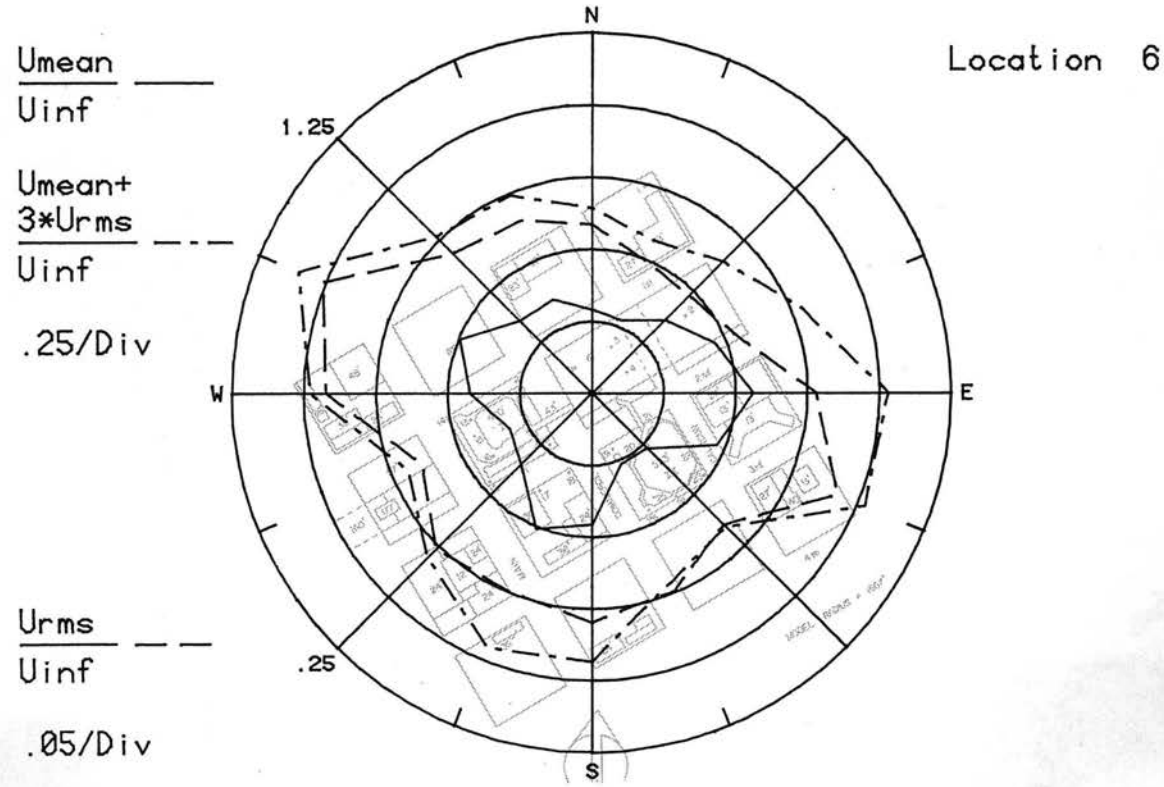

Figure 8c. Mean Velocities and Turbulence Intensities at Pedestrian Locations 5 and 6

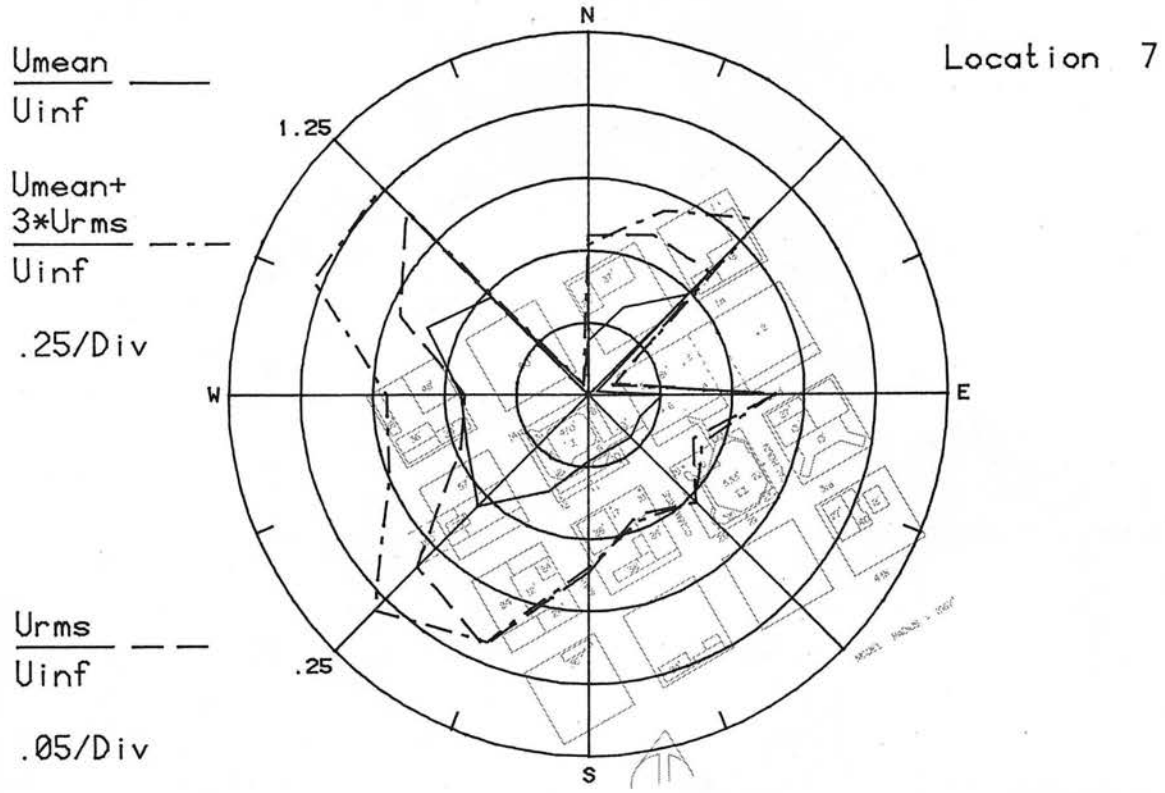

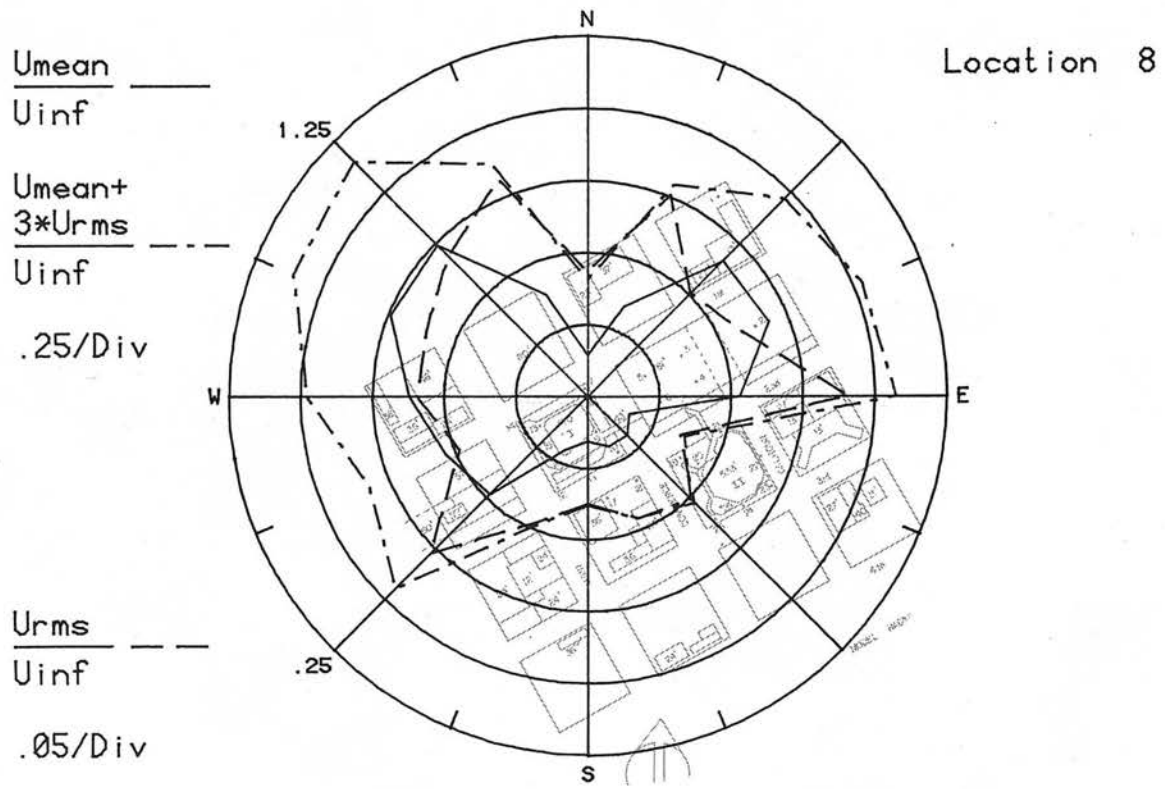

Figure 8d. Mean Velocities and Turbulence Intensities at Pedestrian Locations 7 and 8

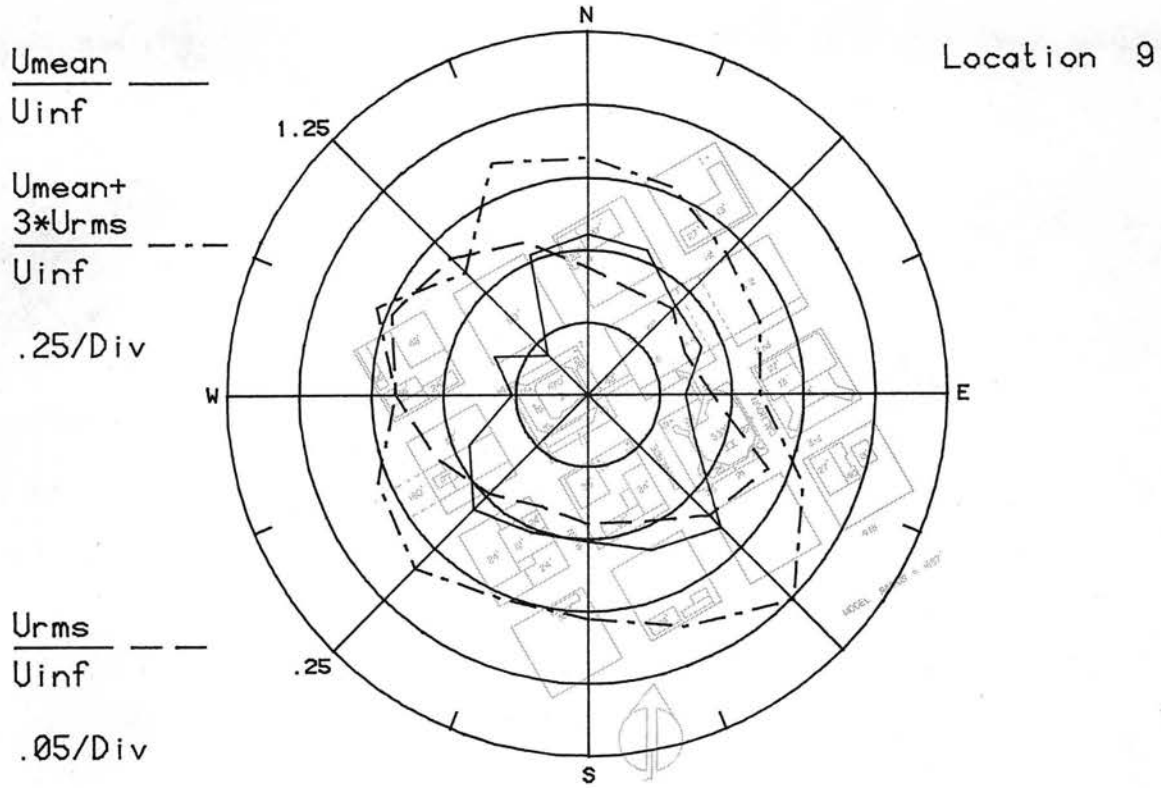

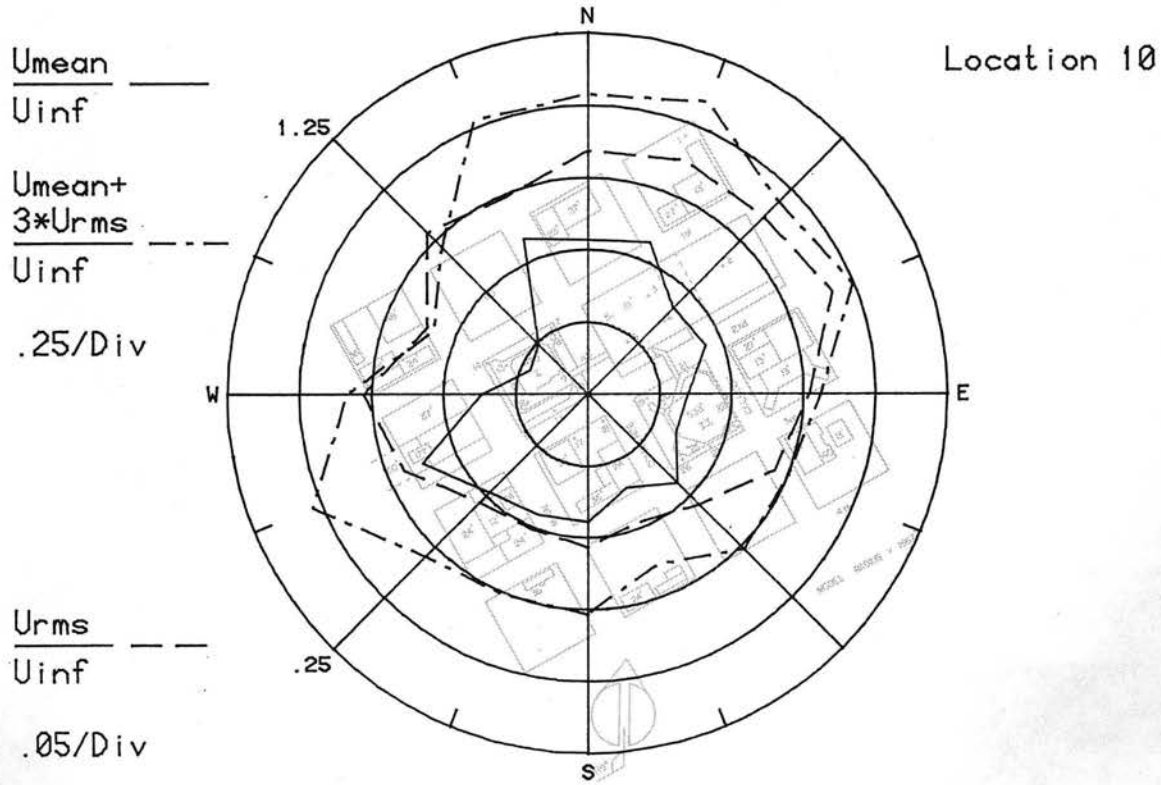

Figure 8e. Mean Velocities and Turbulence Intensities at Pedestrian Locations 9 and 10

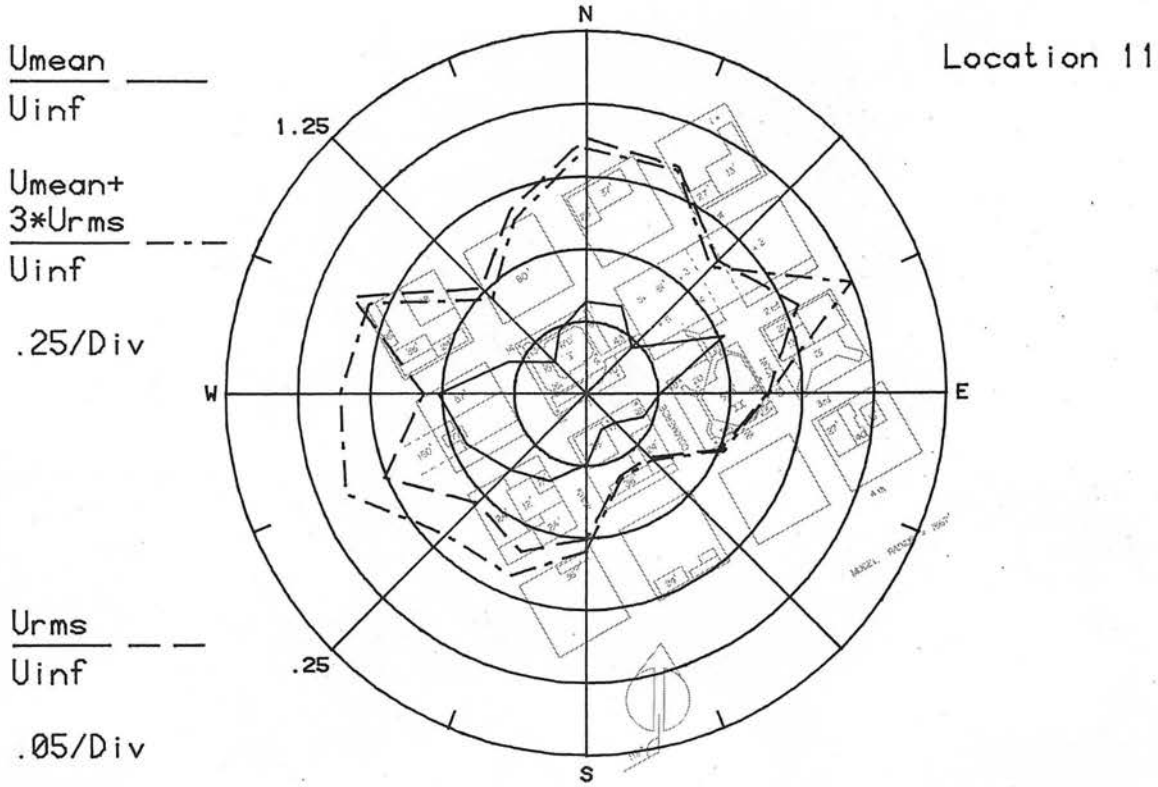

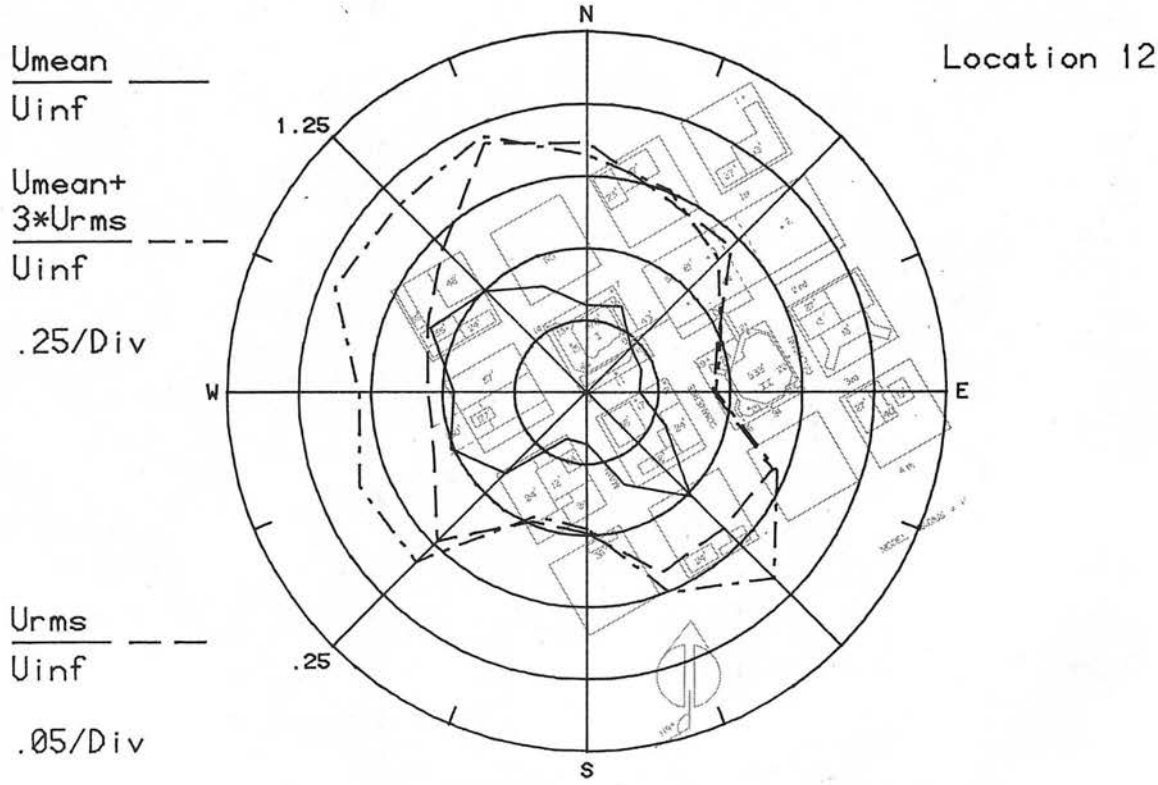

Figure 8f. Mean Velocities and Turbulence Intensities at Pedestrian Locations 11 and 12

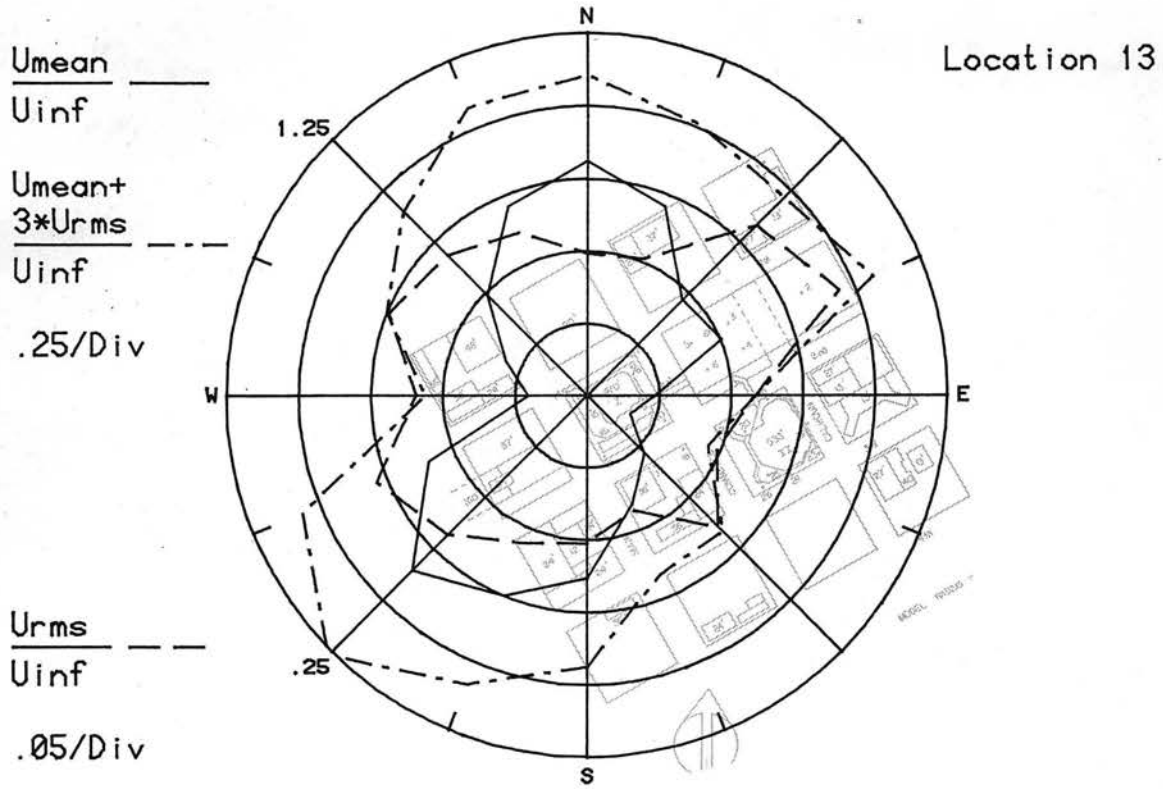

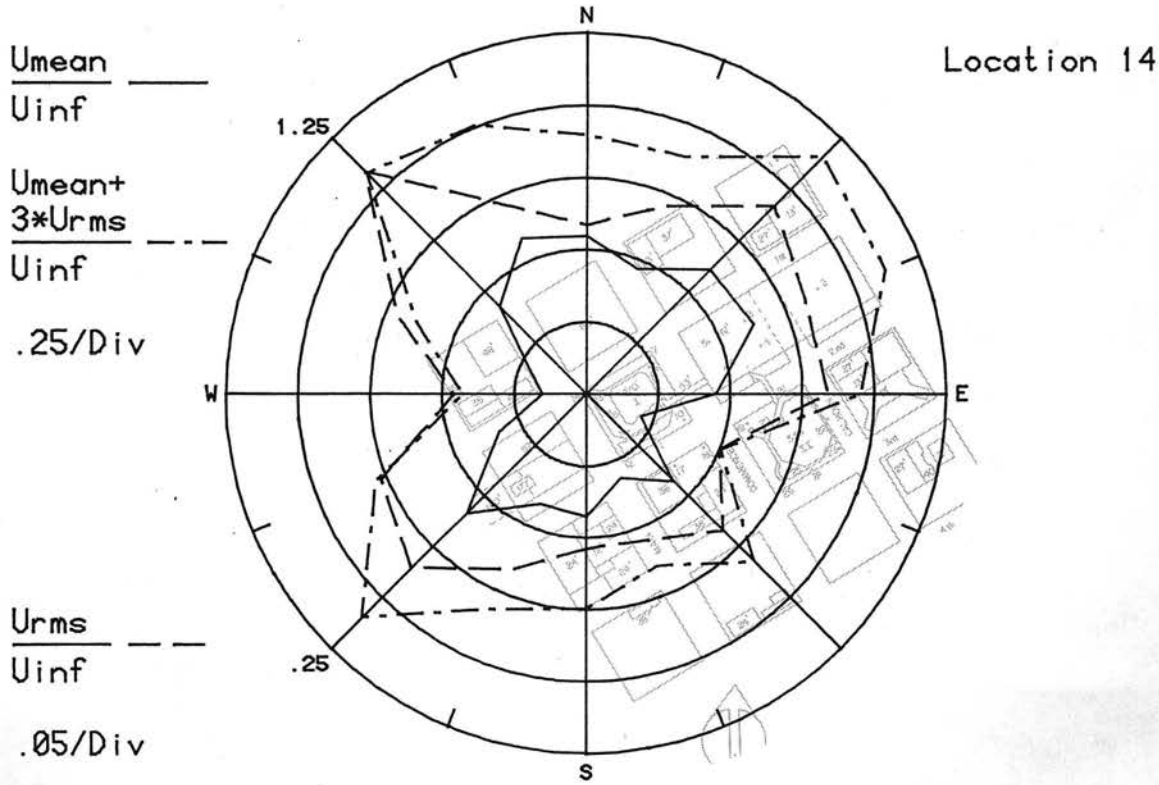

Figure 8g. Mean Velocities and Turbulence Intensities at Pedestrian Locations 13 and 14

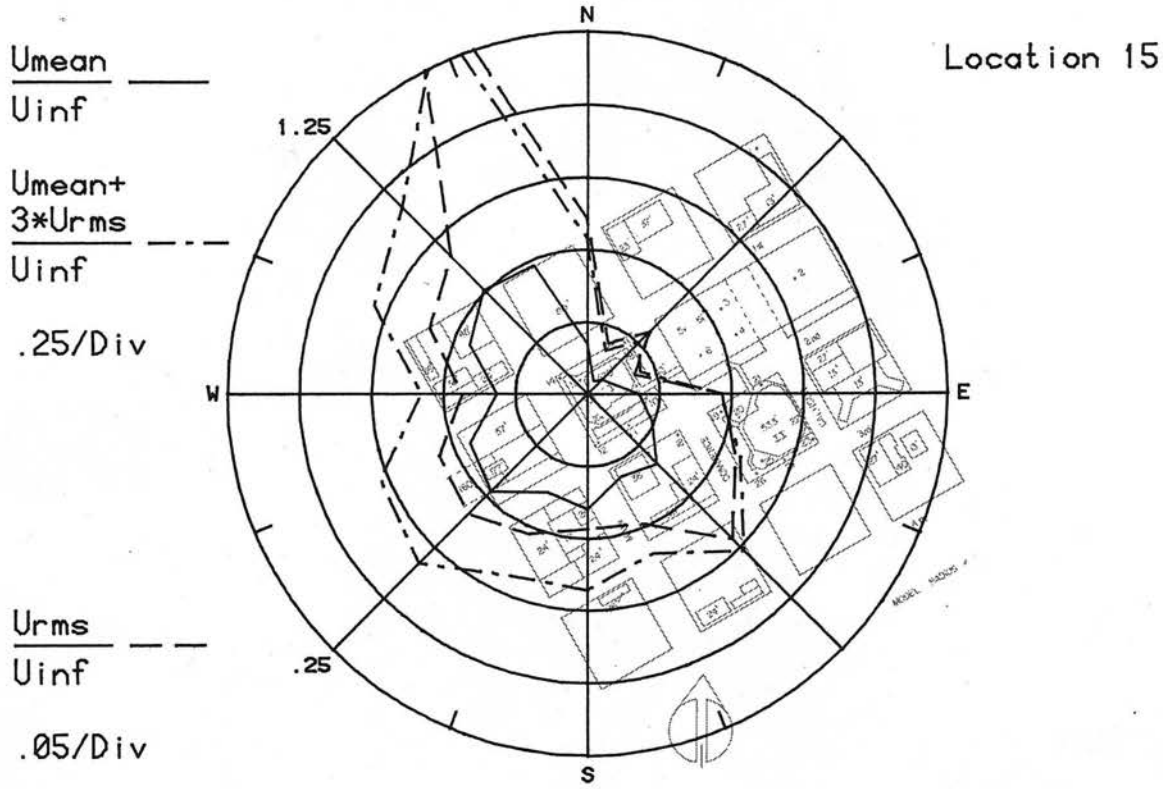

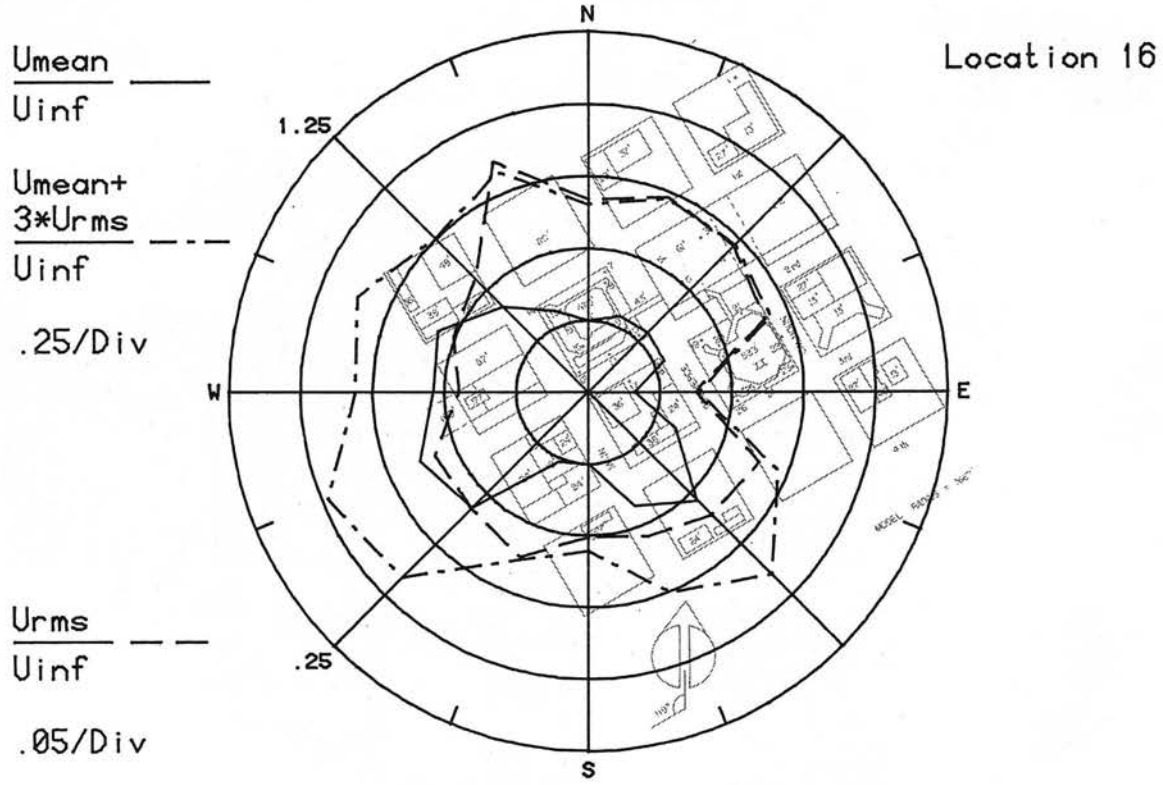

Figure 8h. Mean Velocities and Turbulence Intensities at Pedestrian Locations 15 and 16

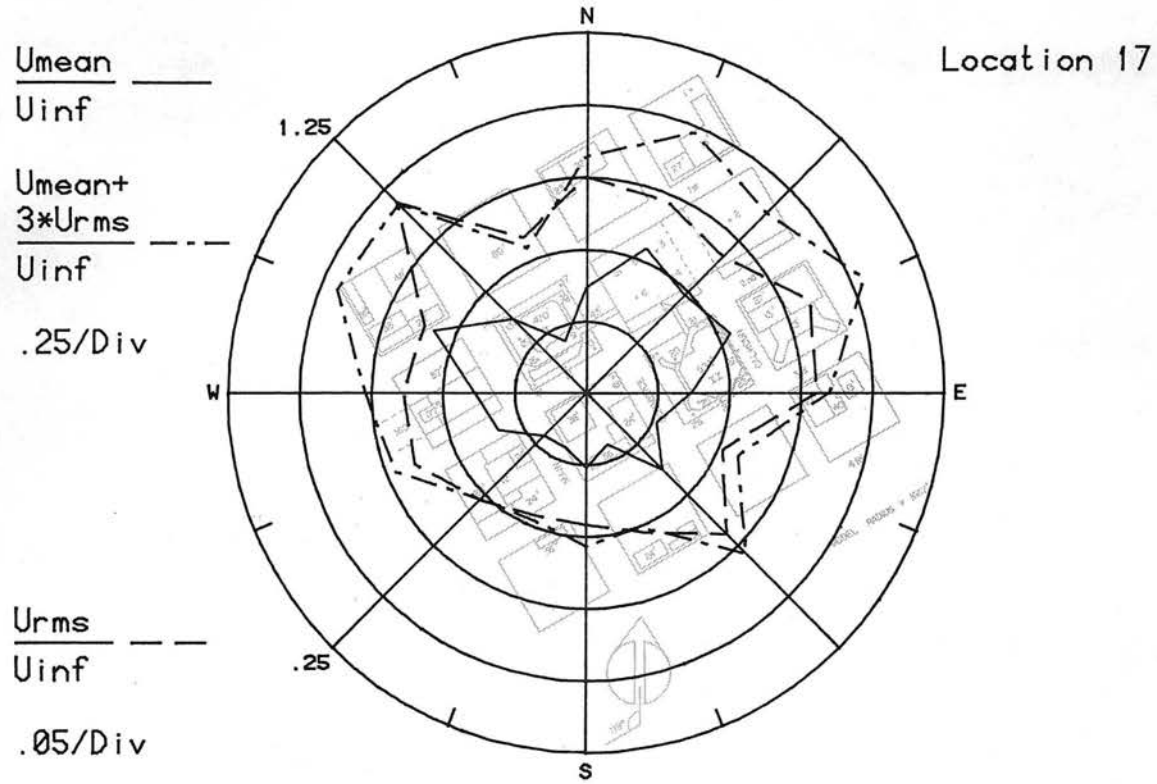

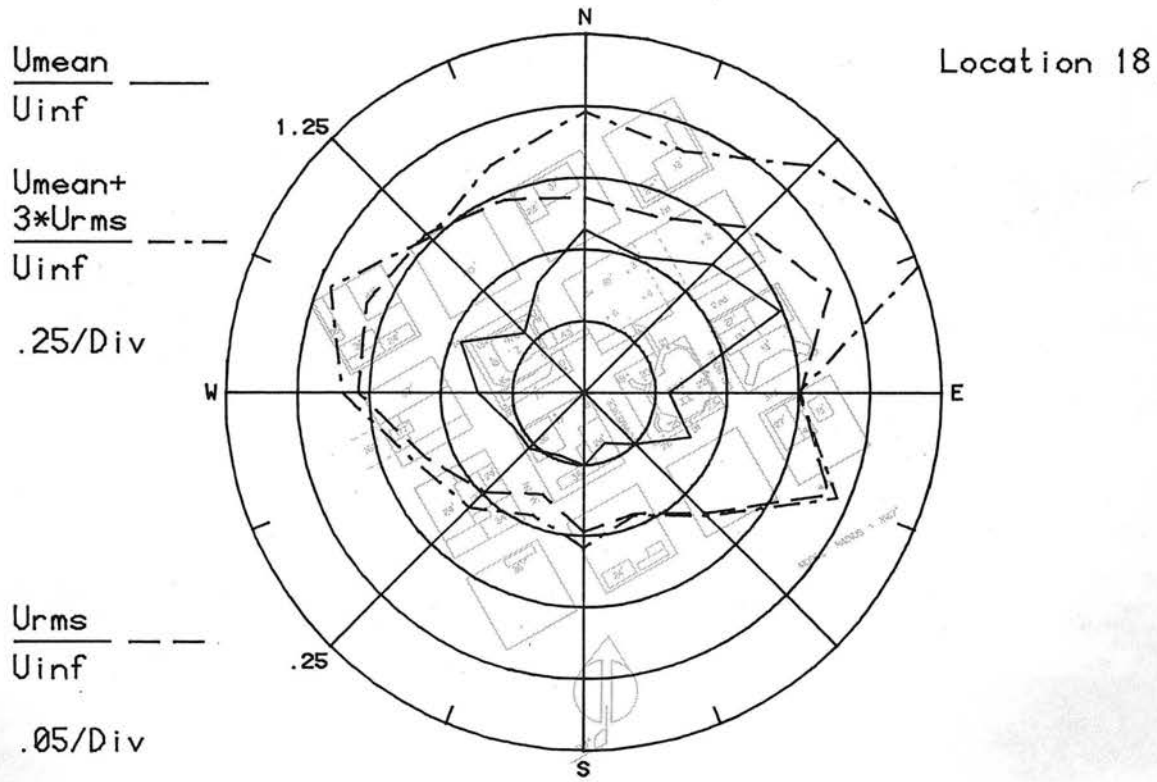

Figure 8i. Mean Velocities and Turbulence Intensities at Pedestrian Locations 17 and 18

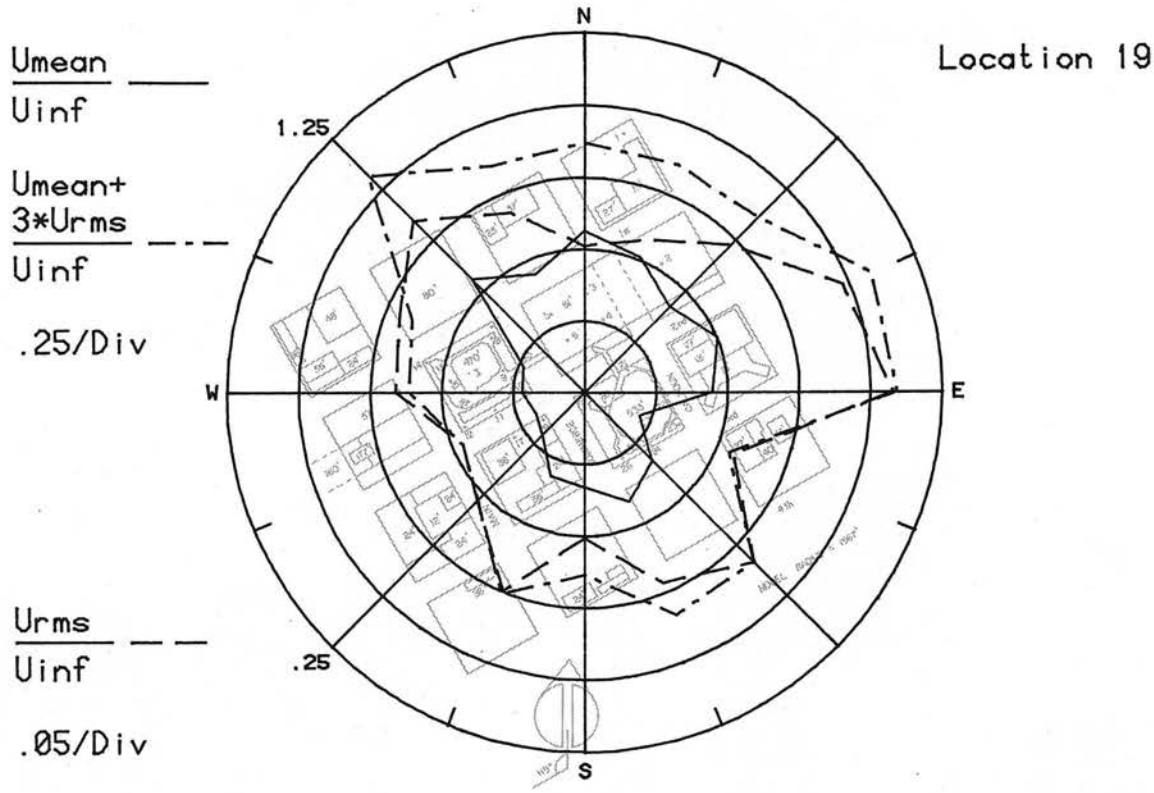

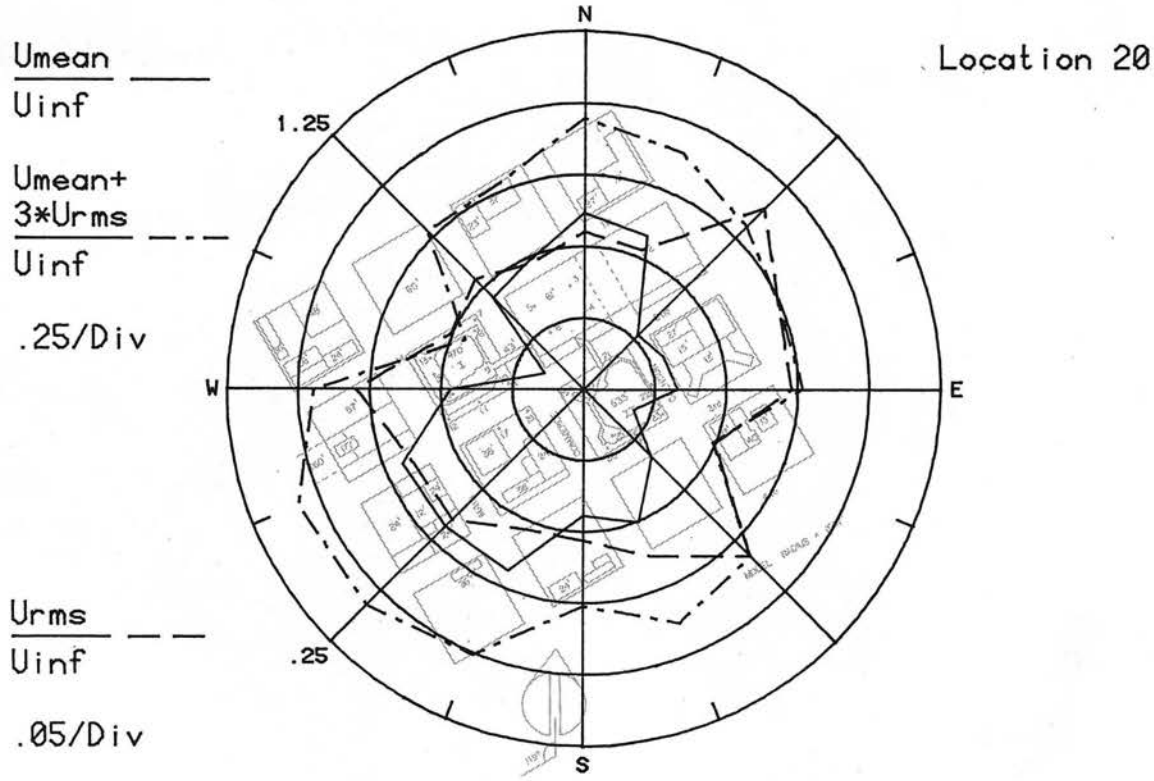

Figure 8j. Mean Velocities and Turbulence Intensities at Pedestrian Locations 19 and 20

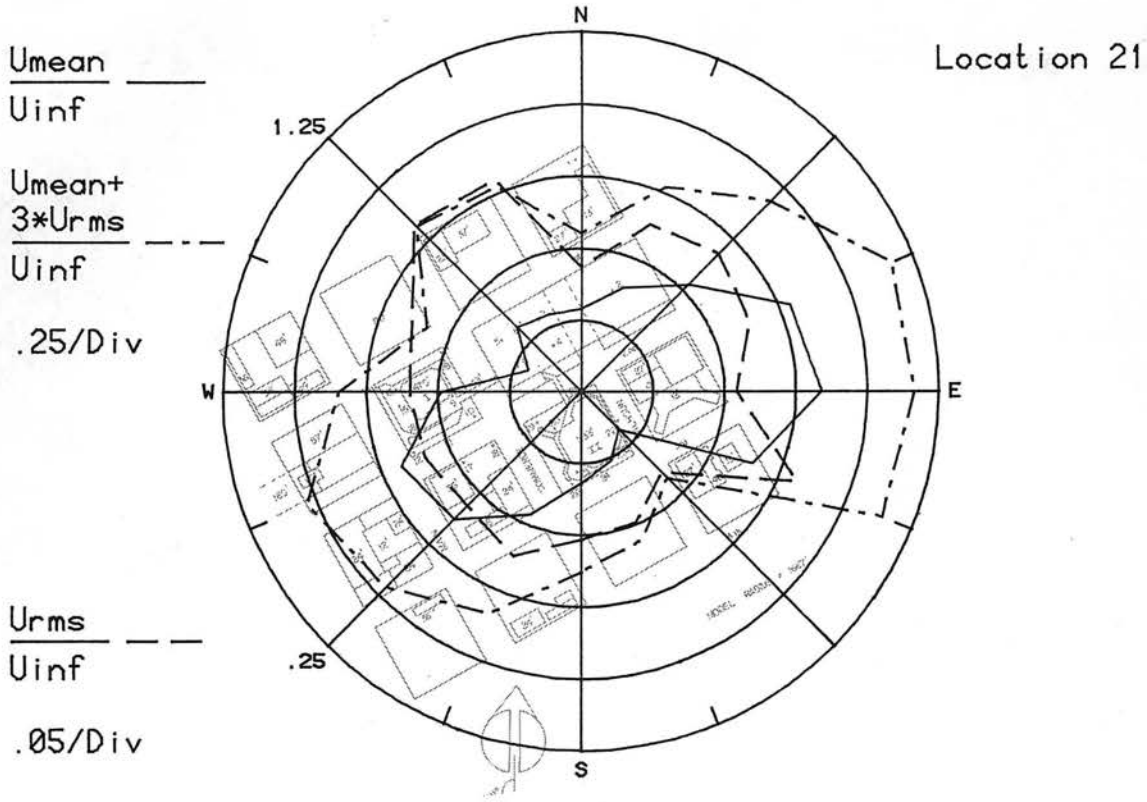

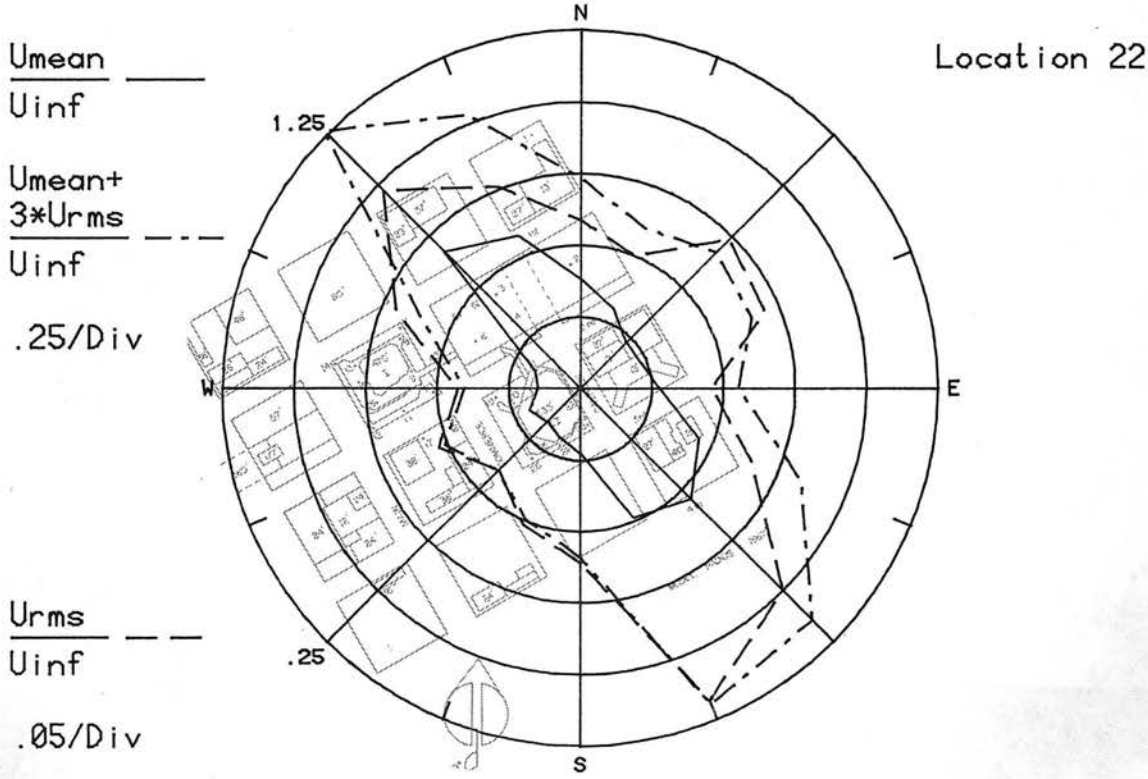

Figure 8k. Mean Velocities and Turbulence Intensities at Pedestrian Locations 21 and 22

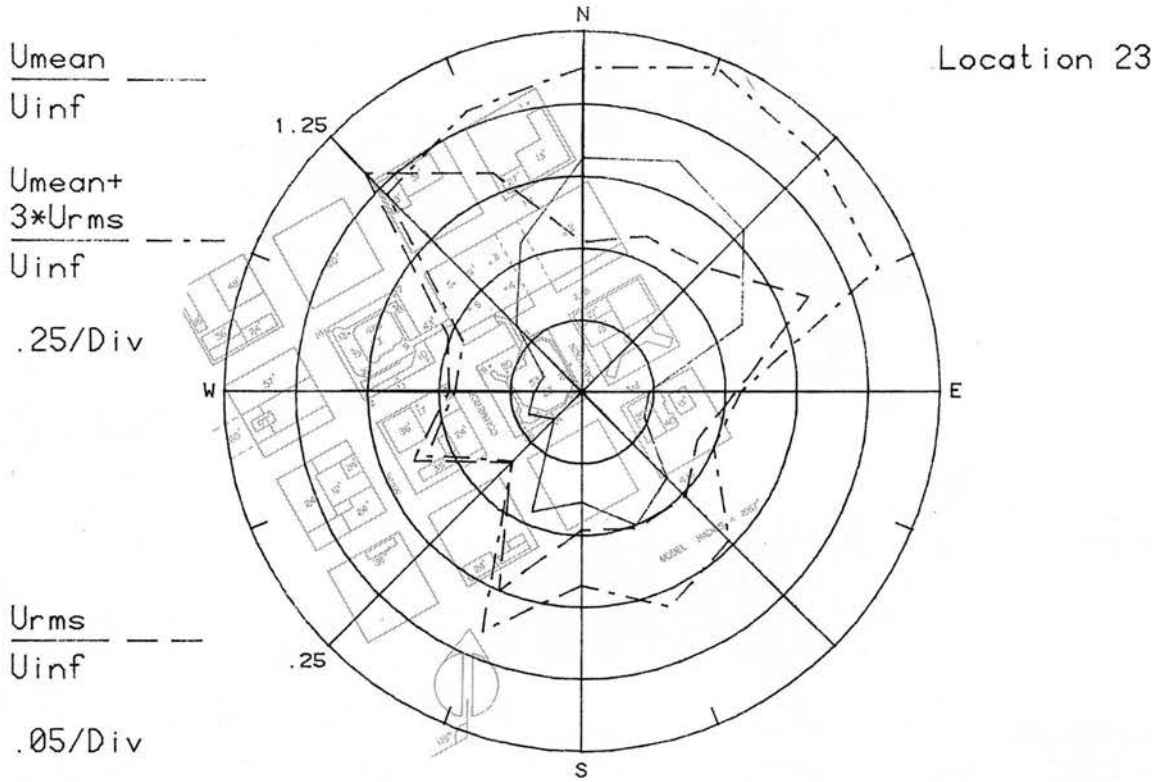

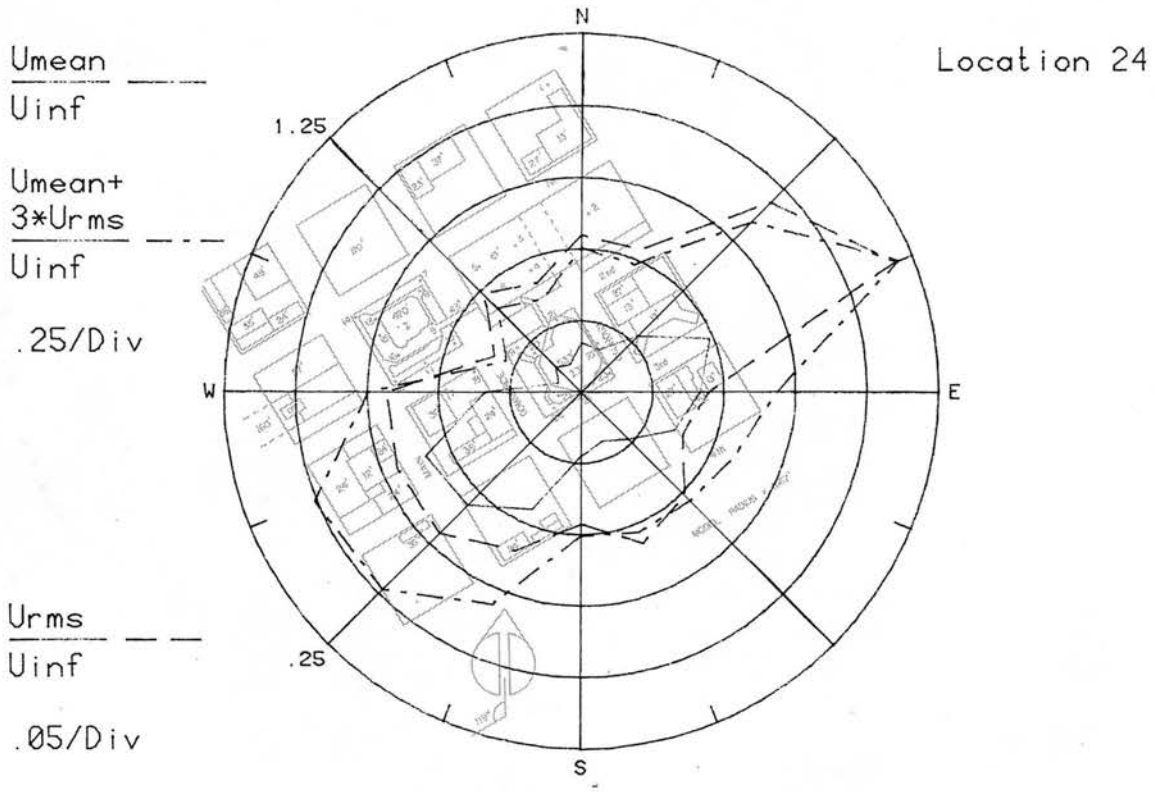

Figure 81. Mean Velocities and Turbulence Intensities at Pedestrian Locations 23 and 24

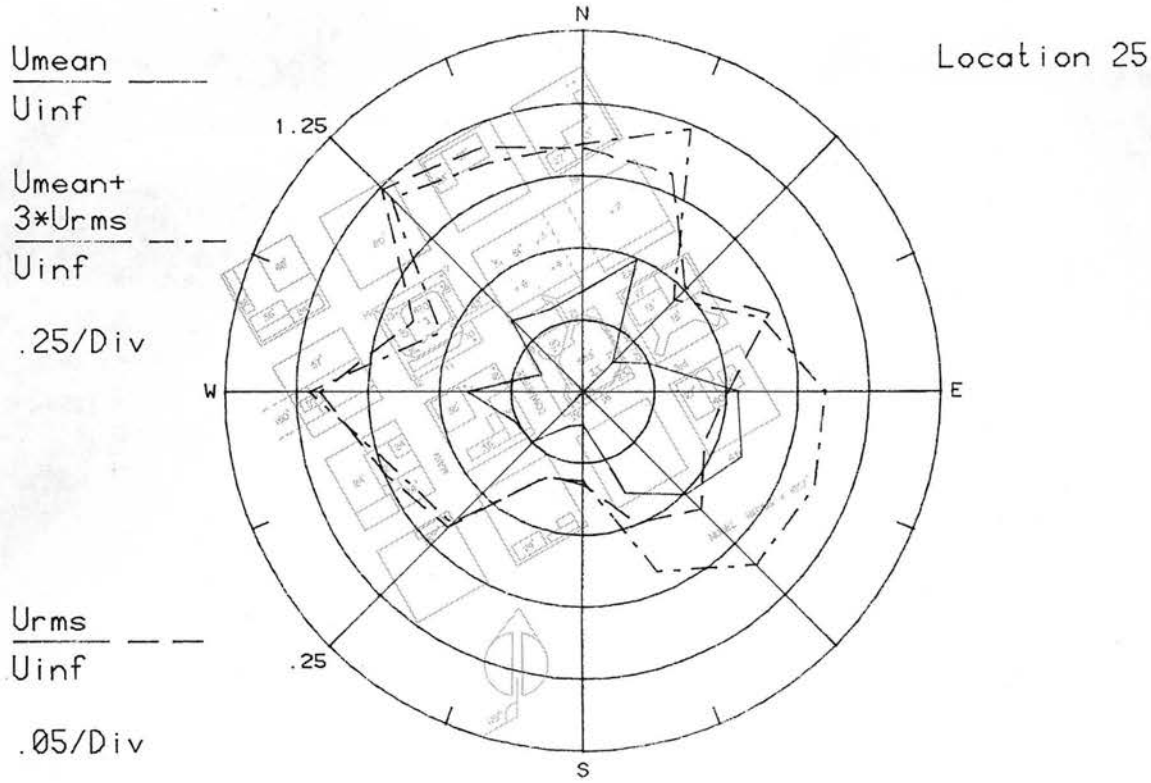

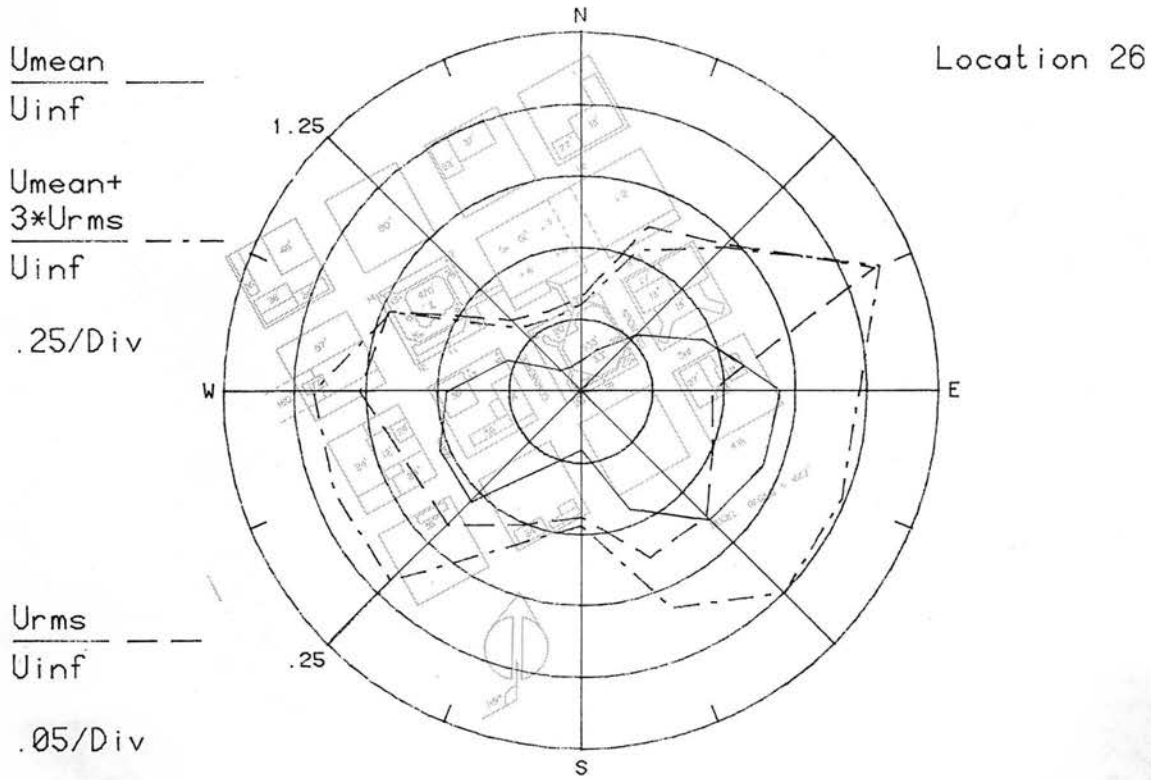

Figure 8m. Mean Velocities and Turbulence Intensities at Pedestrian Locations 25 and 26

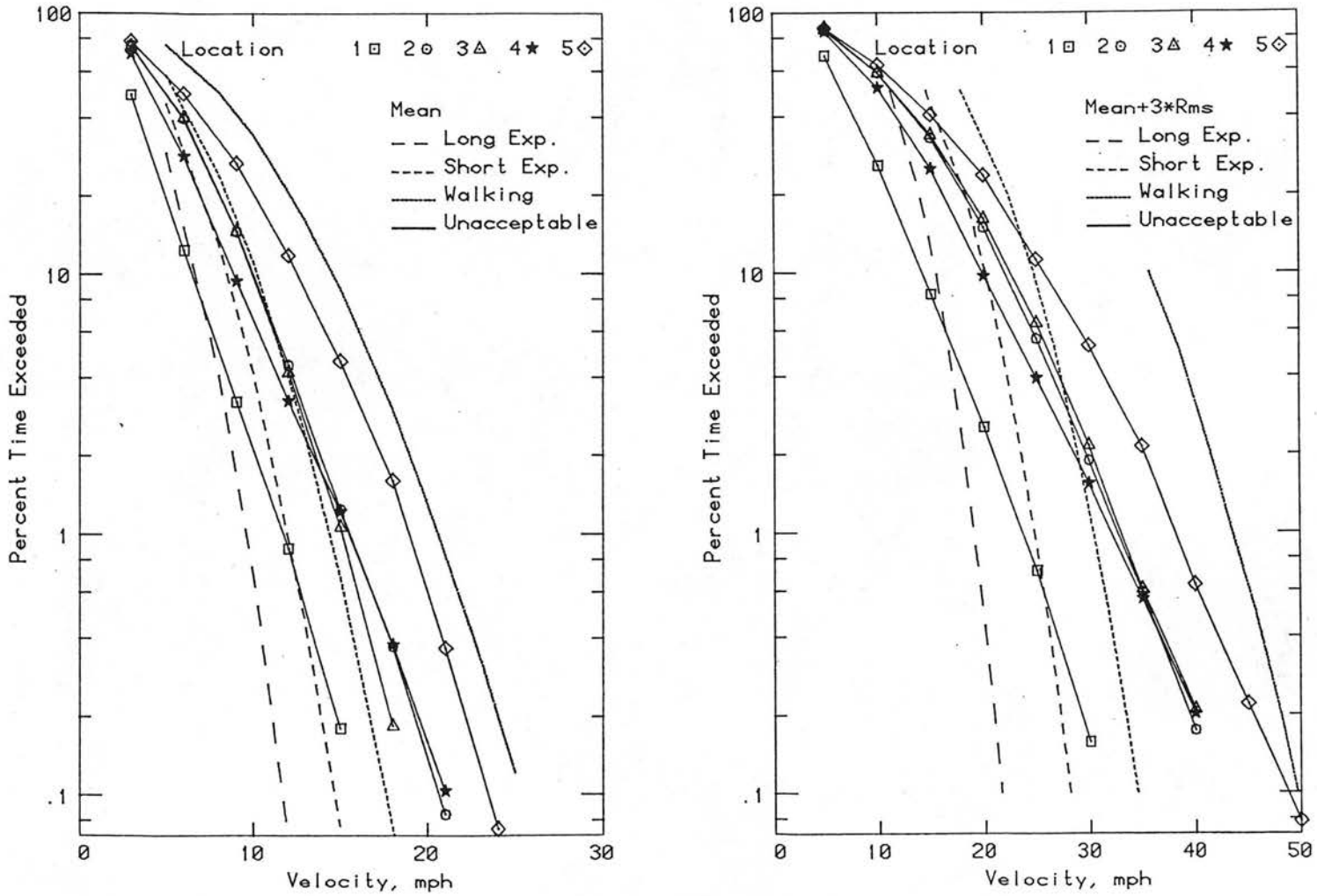

Figure 9a. Wind Velocity Probabilities for Pedestrian Locations

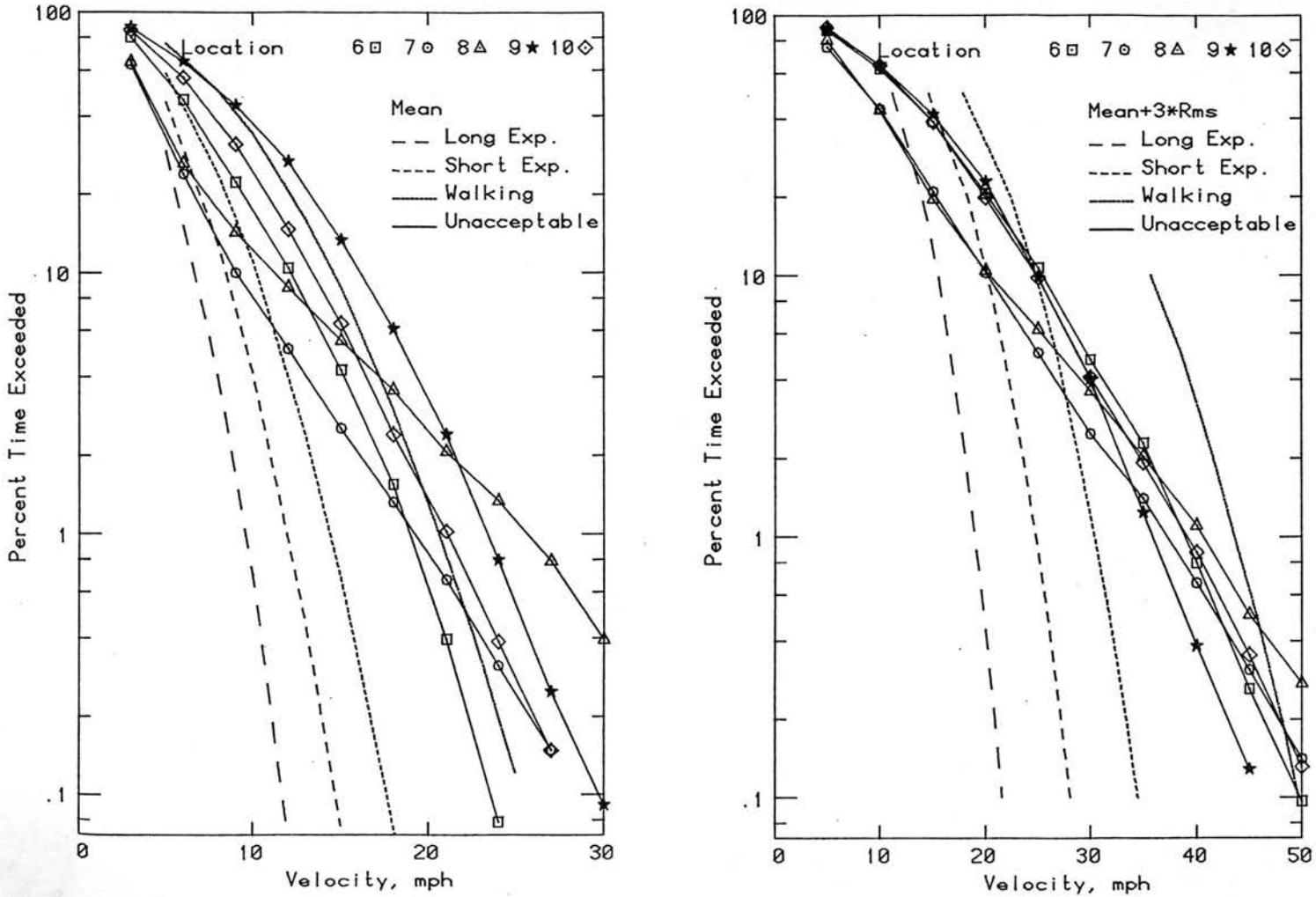

Figure 9b. Wind Velocity Probabilities for Pedestrian Locations

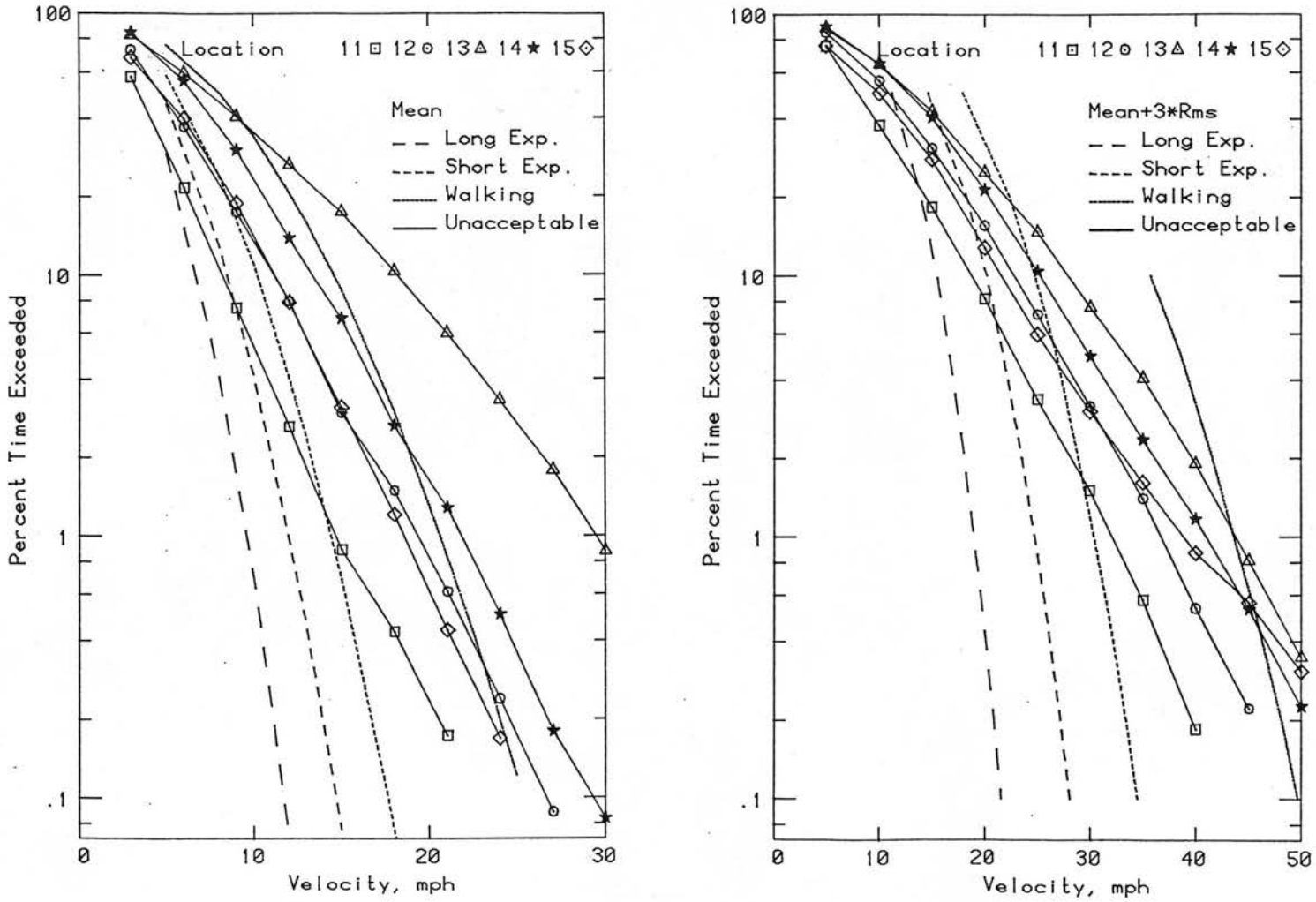

Figure 9c. Wind Velocity Probabilities for Pedestrian Locations

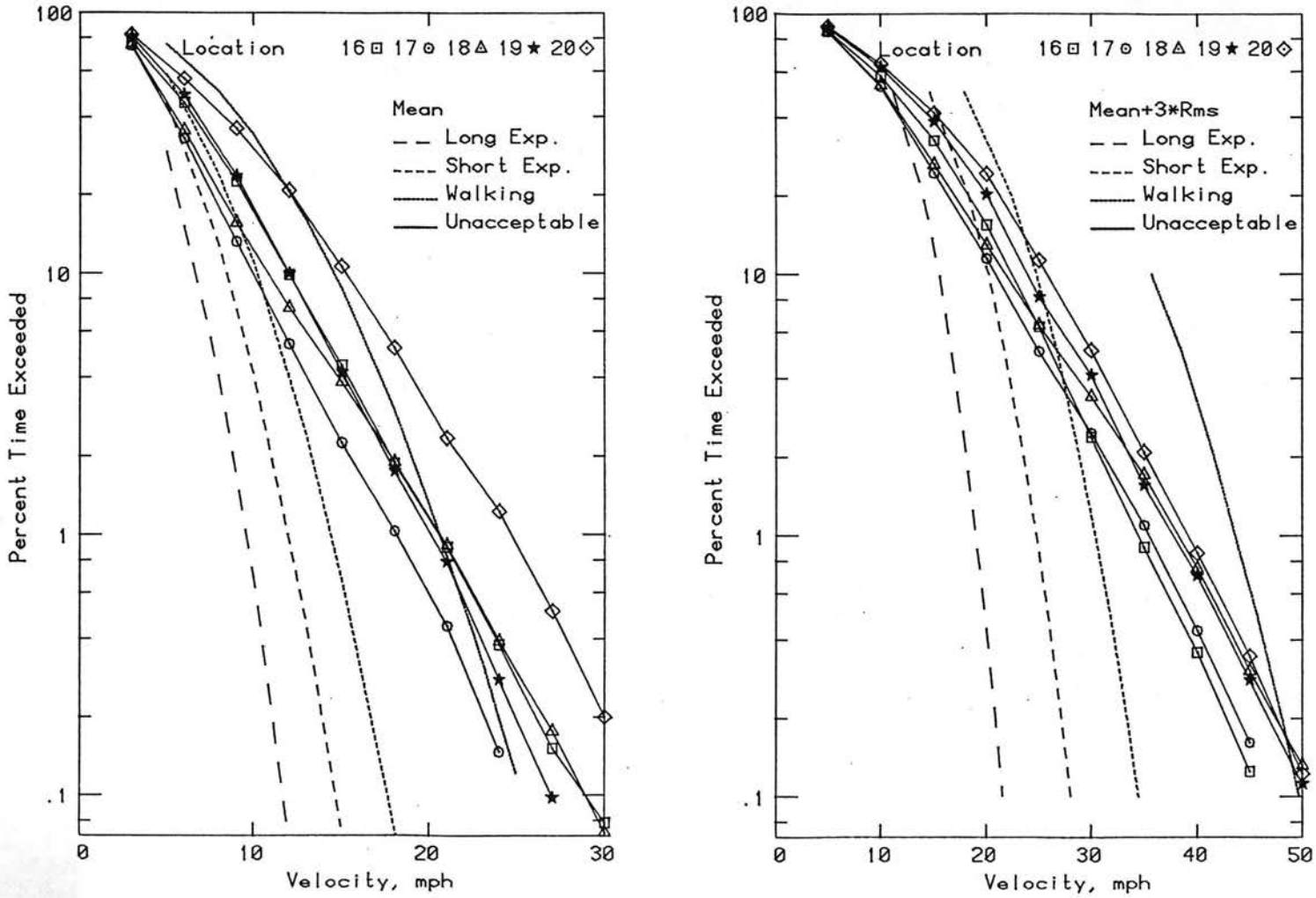

Figure 9d. Wind Velocity Probabilities for Pedestrian Locations

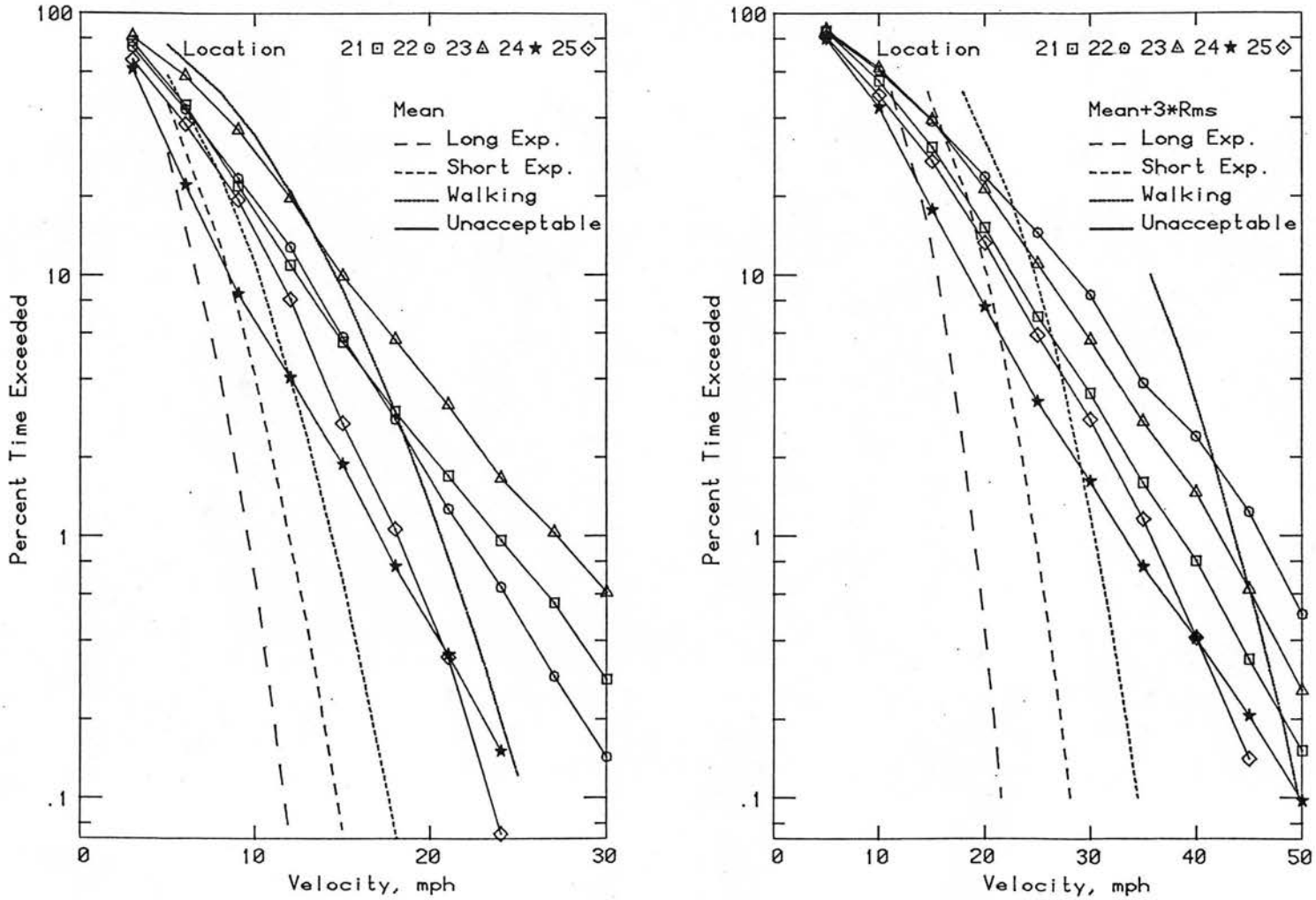

Figure 9e. Wind Velocity Probabilities for Pedestrian Locations

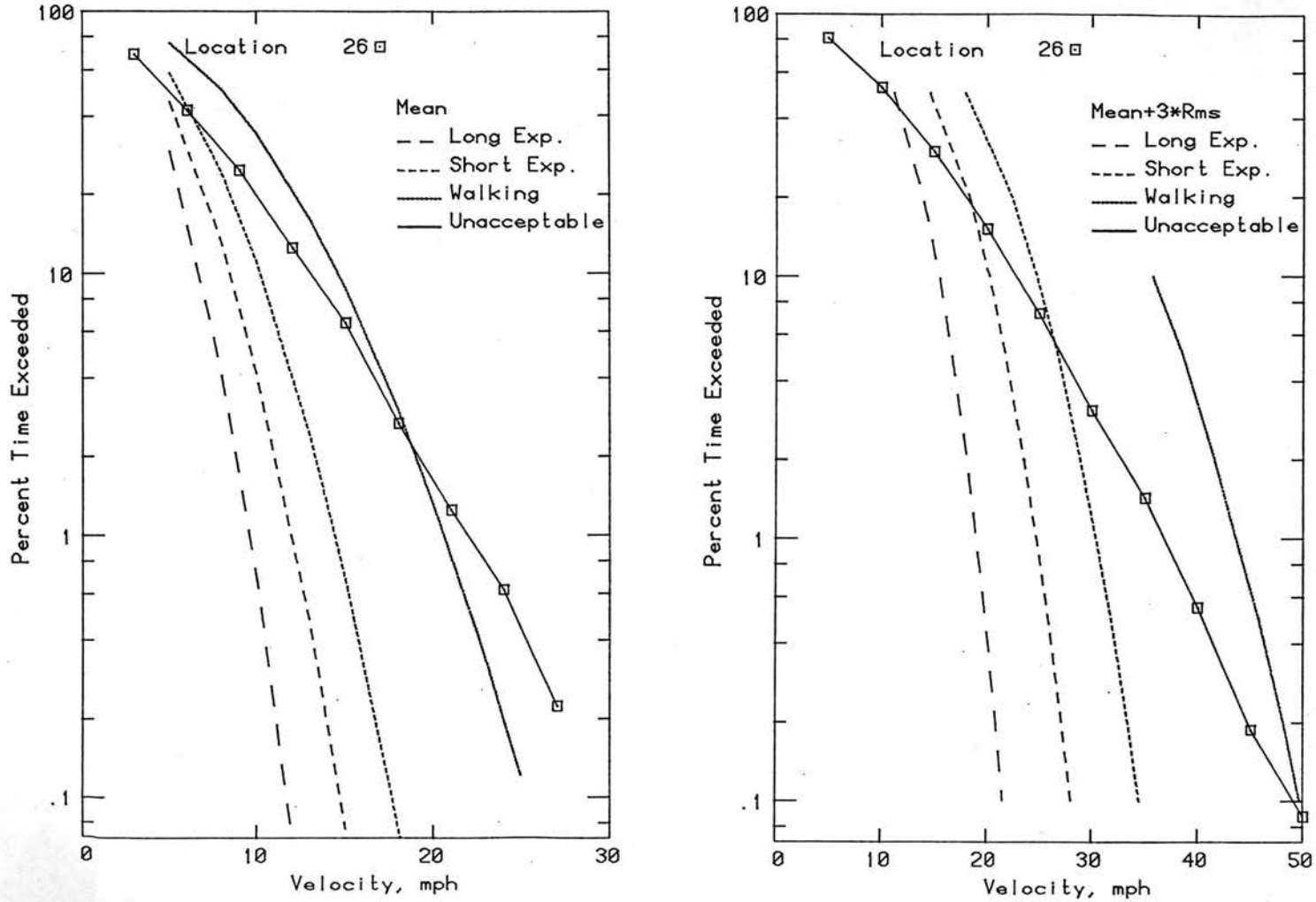

Figure 9f. Wind Velocity Probabilities for Pedestrian Locations

NORTH
ELEVATION

PHASE I

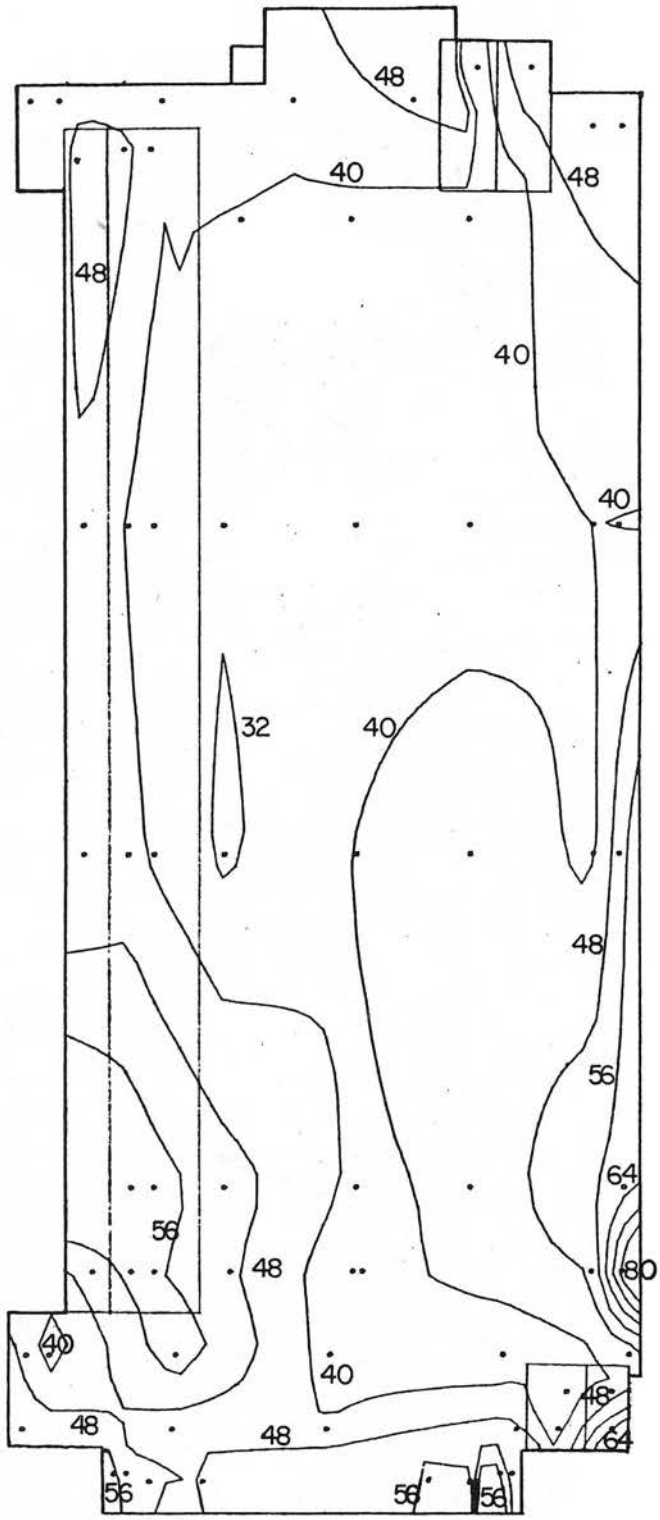

CLADDING LOADS
REFERENCE PRESSURE = 26 PSF

Figure 10a. Peak Pressure Loads on Building

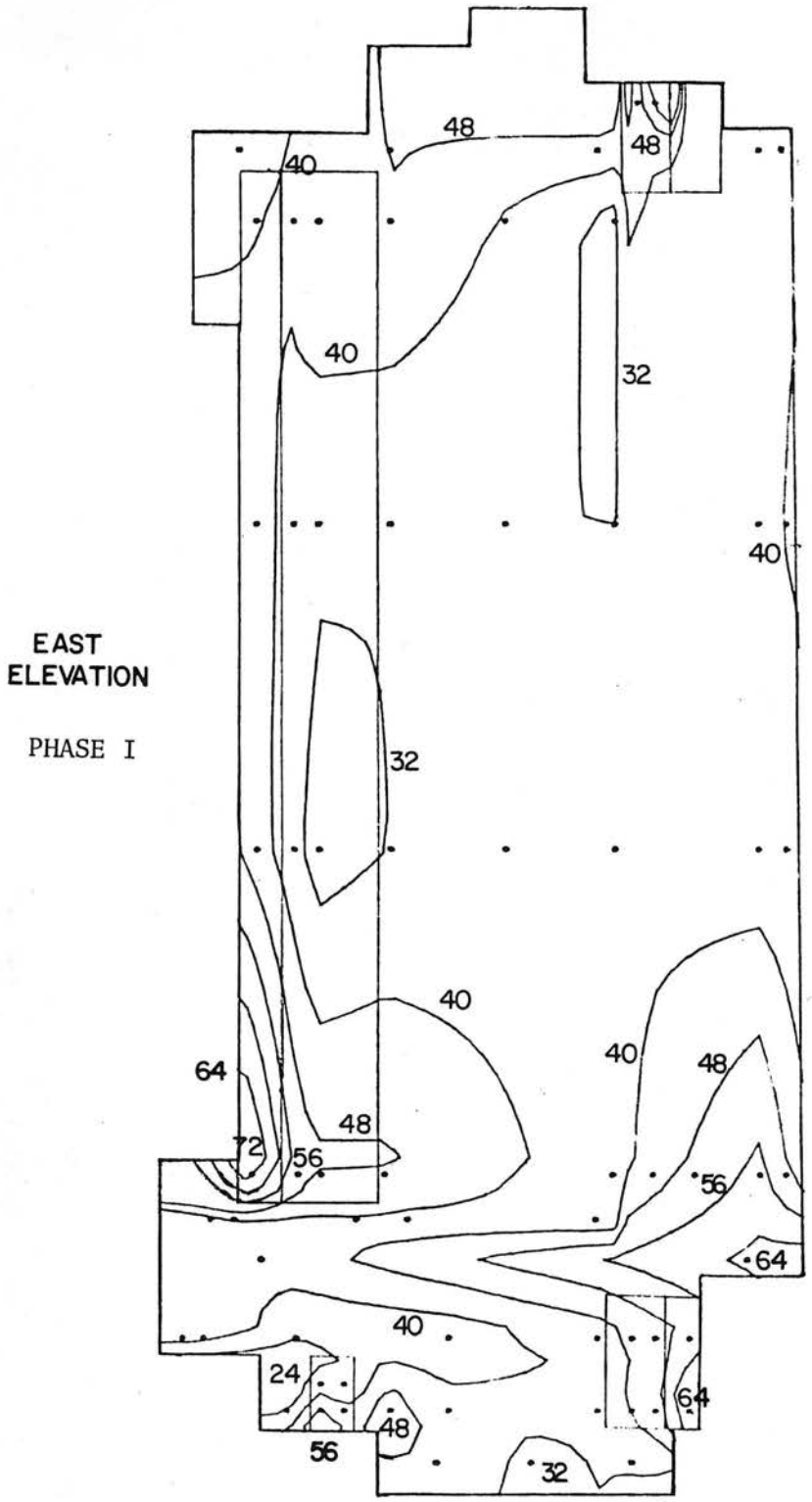

CLADDING LOADS
REFERENCE PRESSURE = 26 PSF

Figure 10b. Peak Pressure Loads on Building

SOUTH
ELEVATION

PHASE I

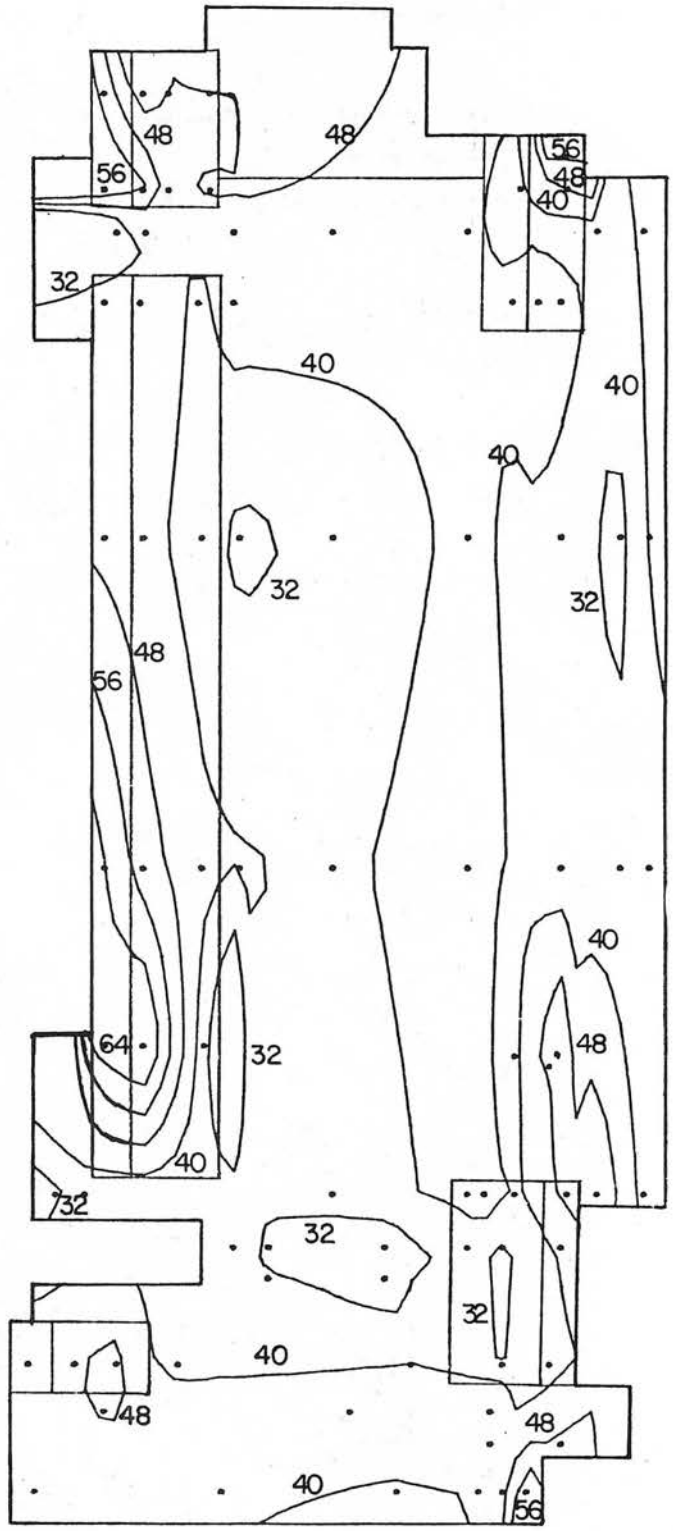

CLADDING LOADS

REFERENCE PRESSURE =26 PSF

Figure 10c. Peak Pressure Loads on Building

WEST
ELEVATION

PHASE I

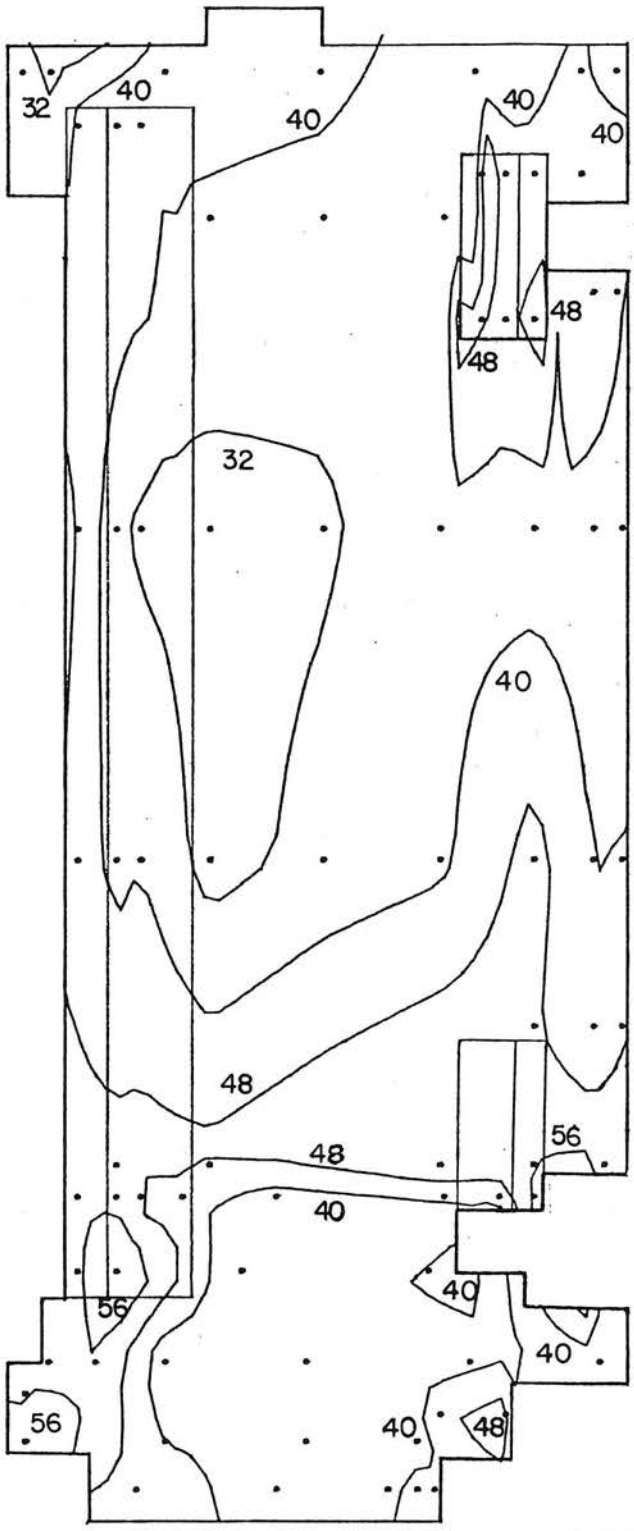

CLADDING LOADS
REFERENCE PRESSURE =26 PSF

Figure 10d. Peak Pressure Loads on Building

NORTH ELEVATION
CLADDING LOADS
REFERENCE PRESSURE=26 PSF

PHASE II

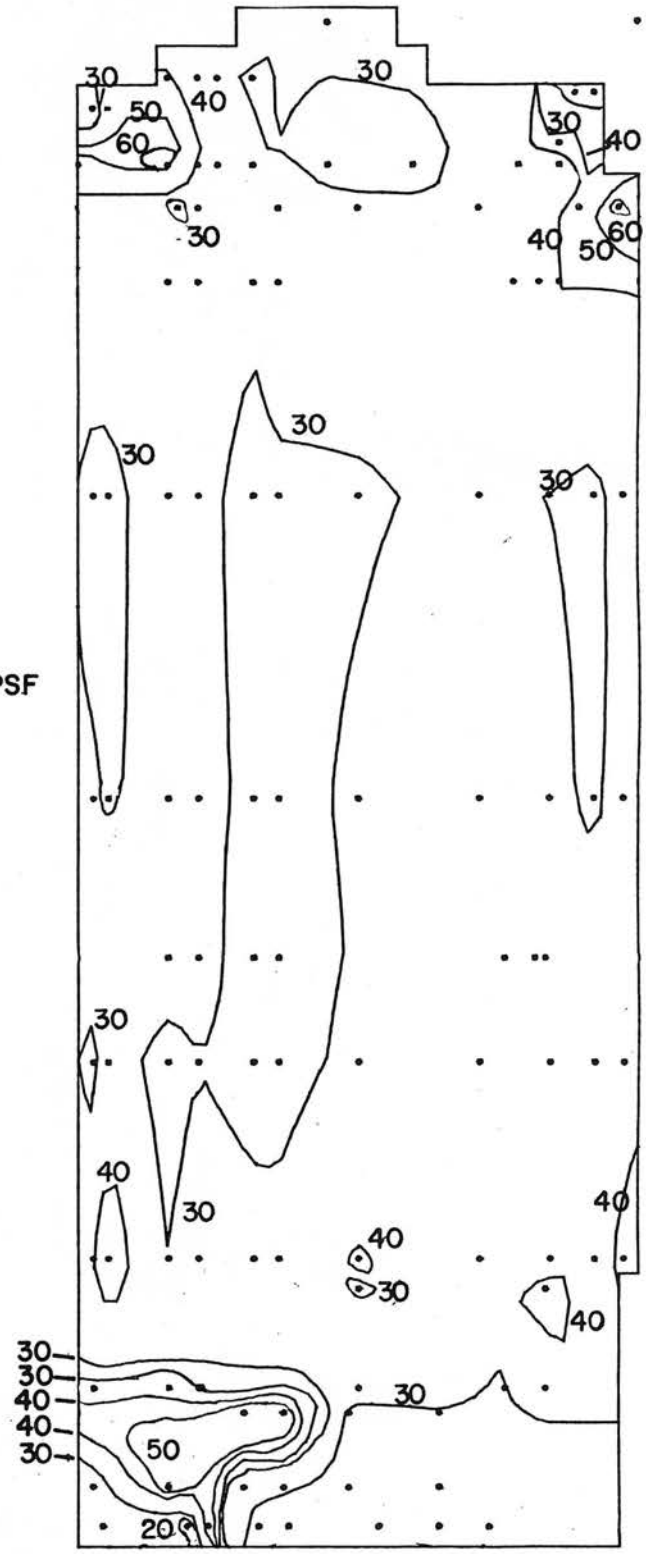

Figure 10e. Peak Pressure Loads on Building

EAST ELEVATION
CLADDING LOADS
REFERENCE PRESSURE= 26 PSF

PHASE II

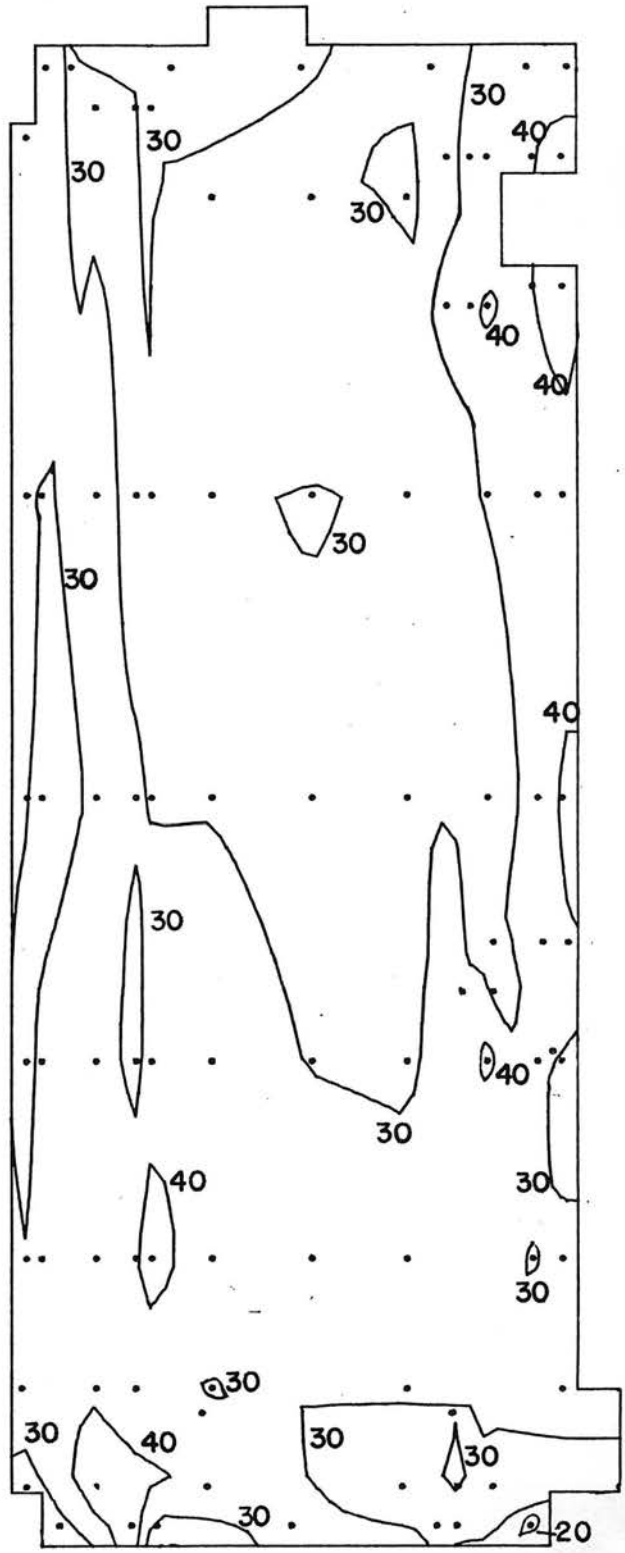

Figure 10f. Peak Pressure Loads on Building

SOUTH ELEVATION
CLADDING LOADS
REFERENCE PRESSURE = 26 PSF

PHASE II

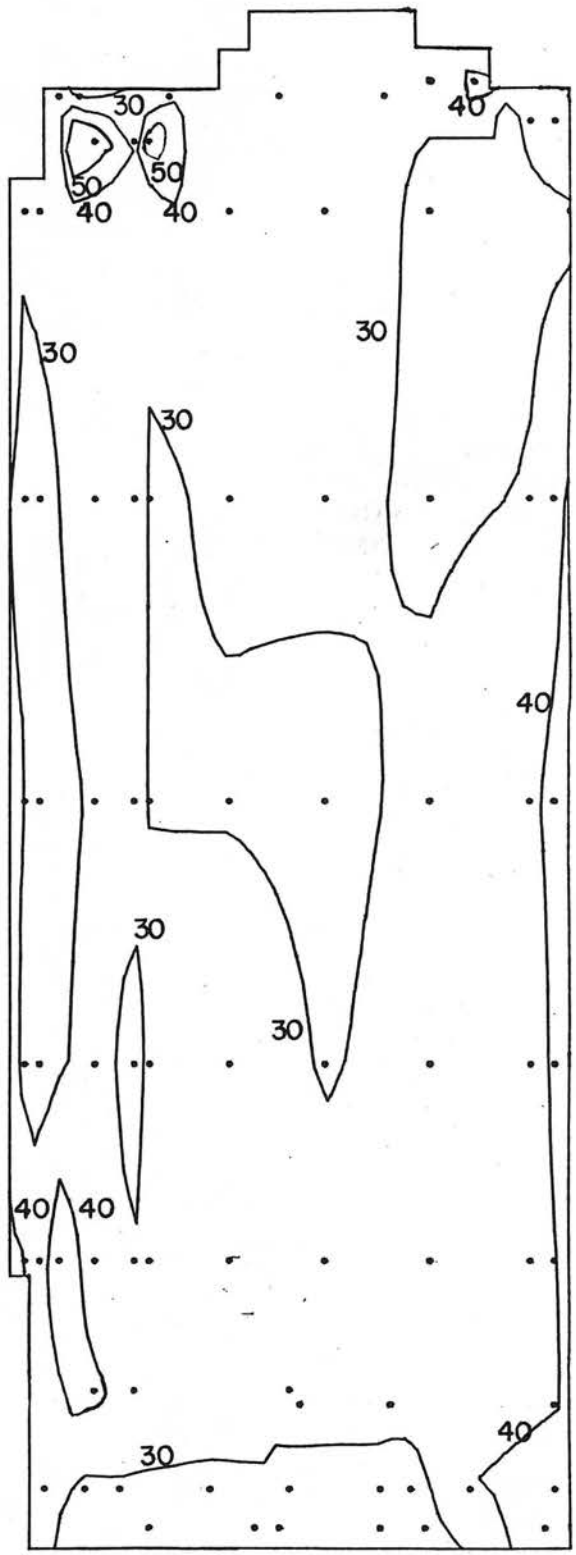

Figure 10g. Peak Pressure Loads on Building

WEST ELEVATION
CLADDING LOADS
REFERENCE PRESSURE = 26 PSF

PHASE II

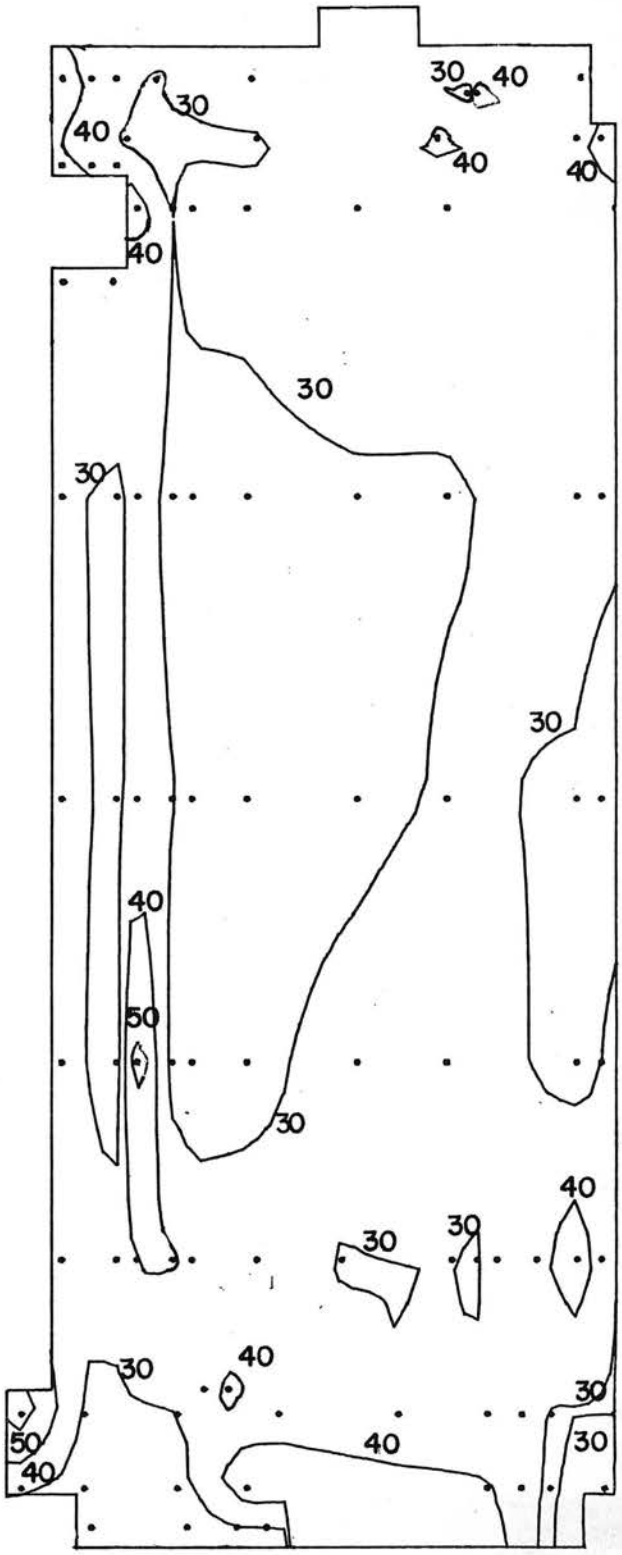

Figure 10h. Peak Pressure Loads on Building

TABLES

TABLE 1

MOTION PICTURE SCENE GUIDE

Run #	Approach Wind Azimuth, degrees
1	0
2	45
3	90
4	135
5	180
6	225
7	270
8	315

TABLE 2--PEDESTRIAN WIND VELOCITIES AND TURBULENCE INTENSITIES

BASS BROTHERS OFFICE BUILDINGS, FT. WORTH

LOCATION 1

WIND AZIMUTH	UMEAN/UINF (PERCENT)	URMS/UINF (PERCENT)	UMEAN+3*URMS/UINF (PERCENT)
0.00	16.9	8.9	43.7
22.50	16.3	8.9	43.0
45.00	17.6	8.8	43.9
67.50	30.0	9.5	58.4
90.00	31.6	8.2	56.1
112.50	34.5	10.2	65.0
135.00	23.2	9.4	51.5
157.50	11.6	5.6	28.6
180.00	13.3	6.5	32.9
202.50	23.5	11.3	57.3
225.00	32.2	12.1	68.4
247.50	32.0	9.1	59.4
270.00	37.4	9.1	64.8
292.50	26.8	11.0	59.9
315.00	22.1	9.2	49.6
337.50	19.3	8.8	45.7

LOCATION 2

WIND AZIMUTH	UMEAN/UINF (PERCENT)	URMS/UINF (PERCENT)	UMEAN+3*URMS/UINF (PERCENT)
0.00	28.7	12.2	65.4
22.50	26.0	13.1	65.4
45.00	22.0	11.8	57.3
67.50	33.3	11.1	66.5
90.00	44.4	10.9	77.1
112.50	50.6	12.5	88.0
135.00	37.9	14.6	81.8
157.50	34.6	14.0	76.5
180.00	25.7	13.0	64.8
202.50	22.3	12.4	59.4
225.00	25.6	13.0	64.5
247.50	28.9	11.7	64.1
270.00	33.9	15.5	80.4
292.50	44.9	13.5	85.3
315.00	34.0	15.0	79.1
337.50	30.6	14.2	73.1

LOCATION 3

WIND AZIMUTH	UMEAN/UINF (PERCENT)	URMS/UINF (PERCENT)	UMEAN+3*URMS/UINF (PERCENT)
0.00	16.6	11.2	50.3
22.50	18.8	11.3	52.6
45.00	27.7	9.6	56.3
67.50	39.8	9.8	69.0
90.00	46.3	10.6	78.2
112.50	38.4	12.4	75.5
135.00	38.4	15.8	85.7
157.50	32.7	14.1	74.9
180.00	29.6	14.2	72.4
202.50	37.0	14.5	80.5
225.00	32.1	13.0	71.1
247.50	27.2	12.4	64.3
270.00	29.8	16.2	78.5
292.50	40.0	16.6	89.7
315.00	32.9	14.9	77.7
337.50	23.1	14.2	65.7

LOCATION 4

WIND AZIMUTH	UMEAN/UINF (PERCENT)	URMS/UINF (PERCENT)	UMEAN+3*URMS/UINF (PERCENT)
0.00	26.7	11.9	62.4
22.50	23.4	11.1	56.8
45.00	28.3	10.0	58.4
67.50	37.2	10.2	67.7
90.00	38.6	14.3	81.5
112.50	39.7	15.2	85.3
135.00	25.5	13.0	64.5
157.50	25.3	12.8	63.6
180.00	17.3	9.5	46.0
202.50	24.5	14.2	67.2
225.00	30.8	14.1	73.2
247.50	37.4	11.4	71.6
270.00	37.6	15.6	84.5
292.50	47.0	15.4	93.1
315.00	39.0	12.6	76.8
337.50	37.9	12.8	76.3

TABLE 2--PEDESTRIAN WIND VELOCITIES AND TURBULENCE INTENSITIES

BASS BROTHERS OFFICE BUILDINGS, FT. WORTH

LOCATION 5

WIND AZIMUTH	UMEAN/UINF (PERCENT)	URMS/UINF (PERCENT)	UMEAN+3*URMS/UINF (PERCENT)
0.00	17.7	11.4	51.9
22.50	20.8	10.1	51.2
45.00	28.8	10.2	59.5
67.50	39.2	9.0	66.1
90.00	48.6	12.2	85.2
112.50	52.4	15.7	99.6
135.00	41.2	14.5	84.8
157.50	43.9	15.9	91.7
180.00	48.9	14.5	92.6
202.50	32.4	16.3	81.4
225.00	24.1	12.2	60.8
247.50	26.0	13.2	65.5
270.00	37.9	17.7	90.9
292.50	42.8	19.9	102.6
315.00	29.3	15.1	74.8
337.50	25.7	14.3	68.7

LOCATION 6

WIND AZIMUTH	UMEAN/UINF (PERCENT)	URMS/UINF (PERCENT)	UMEAN+3*URMS/UINF (PERCENT)
0.00	29.1	11.7	64.2
22.50	27.3	9.9	56.9
45.00	35.7	9.5	64.4
67.50	46.1	10.7	78.2
90.00	56.3	15.6	103.1
112.50	47.1	18.5	102.5
135.00	26.9	12.9	65.7
157.50	26.6	14.9	71.4
180.00	45.4	15.9	93.2
202.50	50.7	14.9	95.5
225.00	34.9	15.3	80.7
247.50	30.9	12.8	69.2
270.00	42.3	18.4	97.7
292.50	49.6	20.2	110.1
315.00	35.7	13.6	76.6
337.50	35.3	13.0	74.2

LOCATION 7

WIND AZIMUTH	UMEAN/UINF (PERCENT)	URMS/UINF (PERCENT)	UMEAN+3*URMS/UINF (PERCENT)
0.00	18.8	11.0	51.9
22.50	33.0	11.9	68.7
45.00	49.0	11.9	84.8
67.50	3.2	2.0	9.3
90.00	25.8	13.1	65.0
112.50	19.4	7.9	43.1
135.00	20.6	10.6	52.5
157.50	20.1	9.0	47.0
180.00	23.1	12.3	60.0
202.50	36.0	18.8	92.5
225.00	54.6	16.9	105.3
247.50	46.0	9.6	74.9
270.00	44.4	8.6	70.2
292.50	60.9	14.2	103.4
337.50	47.8	17.8	101.4

LOCATION 8

WIND AZIMUTH	UMEAN/UINF (PERCENT)	URMS/UINF (PERCENT)	UMEAN+3*URMS/UINF (PERCENT)
0.00	14.5	8.7	40.4
22.50	33.9	15.1	79.3
45.00	66.4	10.2	96.9
67.50	68.3	11.7	103.3
90.00	53.0	18.1	107.4
112.50	15.5	7.0	36.6
135.00	19.3	10.5	50.9
157.50	18.7	9.2	46.3
180.00	15.6	7.5	38.1
202.50	20.1	9.6	48.8
225.00	48.2	15.5	94.8
247.50	53.4	9.6	82.3
270.00	62.2	11.9	97.7
292.50	74.3	12.1	110.7
315.00	73.9	13.7	115.0
337.50	38.3	16.3	87.1

TABLE 2--PEDESTRIAN WIND VELOCITIES AND TURBULENCE INTENSITIES

BASS BROTHERS OFFICE BUILDINGS, FT. WORTH

LOCATION 9

WIND AZIMUTH	UMEAN/UINF (PERCENT)	URMS/UINF (PERCENT)	UMEAN+3*URMS/UINF (PERCENT)
0.00	55.3	8.8	81.7
22.50	54.0	7.8	77.5
45.00	43.2	8.3	68.2
67.50	42.8	7.3	64.9
90.00	34.0	8.6	59.8
112.50	40.3	13.5	80.9
135.00	65.2	11.9	100.8
157.50	58.2	9.5	86.8
180.00	50.8	8.9	77.5
202.50	51.4	8.4	76.6
225.00	55.9	9.6	84.9
247.50	44.6	11.4	78.7
270.00	26.4	13.3	66.3
292.50	35.2	14.7	79.2
315.00	19.5	13.4	59.7
337.50	52.4	11.4	86.6

LOCATION 10

WIND AZIMUTH	UMEAN/UINF (PERCENT)	URMS/UINF (PERCENT)	UMEAN+3*URMS/UINF (PERCENT)
0.00	53.2	16.8	103.7
22.50	56.6	17.5	109.1
45.00	42.0	17.3	93.8
67.50	44.5	18.4	99.6
90.00	34.8	15.4	81.0
112.50	33.1	14.0	75.1
135.00	43.8	10.9	76.4
157.50	35.3	9.6	64.1
180.00	44.5	10.7	76.5
202.50	45.1	10.2	75.6
225.00	48.0	10.6	79.7
247.50	62.0	13.8	103.4
270.00	36.8	15.5	83.4
292.50	21.6	12.0	57.7
315.00	24.3	15.7	71.5
337.50	58.1	14.8	102.6

LOCATION 11

WIND AZIMUTH	UMEAN/UINF (PERCENT)	URMS/UINF (PERCENT)	UMEAN+3*URMS/UINF (PERCENT)
0.00	31.8	17.6	84.6
22.50	32.7	16.9	83.3
45.00	22.5	12.9	61.3
67.50	52.0	15.9	99.8
90.00	25.6	12.6	63.6
112.50	21.3	10.2	51.8
135.00	14.0	6.2	32.6
157.50	13.3	6.2	31.8
180.00	24.5	10.1	54.7
202.50	32.7	11.8	68.3
225.00	37.0	10.7	69.1
247.50	44.9	15.2	90.4
270.00	51.4	11.3	85.3
292.50	28.9	17.6	81.6
315.00	15.3	10.3	46.1
337.50	23.8	13.7	65.0

LOCATION 12

WIND AZIMUTH	UMEAN/UINF (PERCENT)	URMS/UINF (PERCENT)	UMEAN+3*URMS/UINF (PERCENT)
0.00	30.2	17.3	82.1
22.50	32.2	14.5	75.7
45.00	22.0	14.2	64.6
67.50	20.7	9.9	50.5
90.00	18.5	8.8	45.0
112.50	29.6	14.0	71.5
135.00	51.5	13.4	91.8
157.50	34.7	13.7	75.7
180.00	18.0	9.8	47.5
202.50	17.5	9.8	46.8
225.00	39.6	14.7	83.7
247.50	51.2	11.5	85.7
270.00	46.1	11.0	79.1
292.50	58.9	12.0	94.8
315.00	49.6	14.1	91.9
337.50	40.0	18.6	95.8

TABLE 2--PEDESTRIAN WIND VELOCITIES AND TURBULENCE INTENSITIES

BASS BROTHERS OFFICE BUILDINGS, FT. WORTH

LOCATION 13

WIND AZIMUTH	UMEAN/UINF (PERCENT)	URMS/UINF (PERCENT)	UMEAN+3*URMS/UINF (PERCENT)
0.00	80.9	9.8	110.3
22.50	70.5	10.2	101.2
45.00	46.8	16.6	96.6
67.50	50.6	18.9	107.3
90.00	23.5	11.7	58.5
112.50	16.2	9.7	45.3
135.00	27.9	12.9	66.7
157.50	41.0	8.6	66.8
180.00	63.2	10.2	93.9
202.50	74.8	11.0	107.9
225.00	85.3	13.6	126.1
247.50	59.3	15.8	106.6
270.00	20.4	11.9	56.0
292.50	30.6	14.9	75.2
315.00	48.8	13.7	89.8
337.50	71.1	12.2	107.7

LOCATION 14

WIND AZIMUTH	UMEAN/UINF (PERCENT)	URMS/UINF (PERCENT)	UMEAN+3*URMS/UINF (PERCENT)
0.00	54.6	11.7	89.6
22.50	46.7	14.1	88.9
45.00	60.6	18.5	116.0
67.50	63.0	16.5	112.5
90.00	45.0	16.8	95.3
112.50	20.4	10.0	50.3
135.00	42.5	13.4	82.8
157.50	31.6	11.0	64.6
180.00	42.5	10.8	74.8
202.50	41.2	13.2	80.8
225.00	58.4	17.1	109.8
247.50	32.7	15.4	78.9
270.00	15.2	9.2	42.7
292.50	21.0	14.1	63.5
315.00	42.8	21.7	107.9
337.50	58.3	14.1	100.6

LOCATION 15

WIND AZIMUTH	UMEAN/UINF (PERCENT)	URMS/UINF (PERCENT)	UMEAN+3*URMS/UINF (PERCENT)
0.00	17.5	12.1	53.7
22.50	5.1	3.8	16.5
45.00	7.0	6.1	25.4
67.50	9.3	3.6	20.0
90.00	17.9	9.3	45.9
112.50	24.2	11.1	57.4
135.00	34.2	14.2	76.9
157.50	30.8	9.7	59.9
180.00	39.8	9.4	67.8
202.50	36.7	10.5	68.1
225.00	47.5	11.8	82.8
247.50	44.4	11.1	77.8
270.00	31.6	8.7	57.7
292.50	44.5	11.9	80.1
315.00	50.9	13.4	91.0
337.50	48.3	27.8	131.7

LOCATION 16

WIND AZIMUTH	UMEAN/UINF (PERCENT)	URMS/UINF (PERCENT)	UMEAN+3*URMS/UINF (PERCENT)
0.00	25.1	13.4	65.2
22.50	28.5	14.6	72.3
45.00	29.4	14.3	72.3
67.50	28.8	13.3	68.7
90.00	16.0	7.5	38.4
112.50	32.8	12.9	71.5
135.00	53.7	12.1	90.1
157.50	42.9	10.9	75.6
180.00	25.1	10.1	55.5
202.50	26.1	12.4	63.5
225.00	56.9	11.5	91.4
247.50	63.4	11.5	97.9
270.00	53.9	9.0	80.8
292.50	56.3	10.1	86.6
315.00	42.0	11.1	75.3
337.50	30.6	17.2	82.3

TABLE 2--PEDESTRIAN WIND VELOCITIES AND TURBULENCE INTENSITIES

BASS BROTHERS OFFICE BUILDINGS, FT. WORTH

LOCATION 17

WIND AZIMUTH	UMEAN/UINF (PERCENT)	URMS/UINF (PERCENT)	UMEAN+3*URMS/UINF (PERCENT)
0.00	37.0	15.0	82.0
22.50	54.5	14.4	97.8
45.00	48.2	13.5	88.6
67.50	54.2	16.9	104.8
90.00	36.5	16.1	84.8
112.50	26.4	10.3	57.3
135.00	37.4	13.9	79.1
157.50	19.2	10.5	50.6
180.00	25.9	9.2	53.4
202.50	20.2	9.2	47.8
225.00	20.7	10.5	52.2
247.50	33.2	12.9	71.9
270.00	38.9	12.8	77.2
292.50	57.6	12.2	94.3
315.00	36.8	18.7	92.8
337.50	19.6	11.7	54.7

LOCATION 18

WIND AZIMUTH	UMEAN/UINF (PERCENT)	URMS/UINF (PERCENT)	UMEAN+3*URMS/UINF (PERCENT)
0.00	57.0	13.6	97.7
22.50	51.2	13.2	90.9
45.00	63.1	16.2	111.7
67.50	73.9	18.6	129.7
90.00	29.6	15.1	74.9
112.50	40.4	18.5	95.9
135.00	25.1	11.9	60.7
157.50	18.8	9.1	46.2
180.00	25.1	9.7	54.3
202.50	23.3	7.6	46.1
225.00	27.1	9.7	56.3
247.50	27.8	11.9	63.4
270.00	37.3	15.8	84.5
292.50	46.6	16.4	95.7
315.00	29.5	15.6	76.3
337.50	42.0	14.5	85.6

LOCATION 19

WIND AZIMUTH	UMEAN/UINF (PERCENT)	URMS/UINF (PERCENT)	UMEAN+3*URMS/UINF (PERCENT)
0.00	56.3	10.2	86.9
22.50	51.1	11.5	85.6
45.00	42.3	14.5	85.8
67.50	50.1	19.5	108.7
90.00	44.4	21.6	109.1
112.50	20.7	11.3	54.6
135.00	33.3	16.7	83.5
157.50	40.8	14.3	83.8
180.00	32.9	10.2	63.4
202.50	31.1	14.9	75.9
225.00	20.9	10.6	52.8
247.50	18.5	9.3	46.3
270.00	22.0	13.2	61.6
292.50	23.2	14.0	65.2
315.00	56.0	16.9	106.7
337.50	44.6	13.5	85.2

LOCATION 20

WIND AZIMUTH	UMEAN/UINF (PERCENT)	URMS/UINF (PERCENT)	UMEAN+3*URMS/UINF (PERCENT)
0.00	61.5	11.0	94.4
22.50	57.8	10.5	89.4
45.00	26.8	17.8	80.3
67.50	30.0	14.8	74.4
90.00	33.1	14.6	76.8
112.50	19.0	10.0	49.0
135.00	33.6	16.5	83.2
157.50	50.4	12.7	88.5
180.00	44.4	10.6	76.2
202.50	68.9	10.6	100.7
225.00	68.2	13.0	107.1
247.50	68.7	13.1	107.9
270.00	46.6	15.9	94.4
292.50	14.8	10.1	45.0
315.00	45.1	10.8	77.5
337.50	49.2	9.5	77.8

TABLE 2--PEDESTRIAN WIND VELOCITIES AND TURBULENCE INTENSITIES

BASS BROTHERS OFFICE BUILDINGS, FT. WORTH

LOCATION 21

WIND AZIMUTH	UMEAN/UINF (PERCENT)	URMS/UINF (PERCENT)	UMEAN+3*URMS/UINF (PERCENT)
0.00	29.1	8.7	55.2
22.50	39.2	12.6	77.0
45.00	52.7	13.5	93.3
67.50	79.1	12.7	117.3
90.00	84.1	10.8	116.5
112.50	64.7	16.3	113.7
135.00	18.5	8.0	42.3
157.50	26.3	9.9	55.9
180.00	31.9	10.3	62.9
202.50	46.2	12.4	83.5
225.00	62.5	11.2	96.3
247.50	67.9	11.8	103.4
270.00	48.8	12.0	84.6
292.50	20.0	12.8	58.3
315.00	32.1	16.4	81.4
337.50	29.3	15.9	77.1

LOCATION 22

WIND AZIMUTH	UMEAN/UINF (PERCENT)	URMS/UINF (PERCENT)	UMEAN+3*URMS/UINF (PERCENT)
0.00	38.3	11.7	73.4
22.50	30.2	10.0	60.1
45.00	22.7	14.7	66.8
67.50	22.9	14.0	64.7
90.00	27.6	9.2	55.2
112.50	44.9	12.9	83.6
135.00	54.5	20.0	114.5
157.50	48.6	23.6	119.5
180.00	22.6	12.2	59.1
202.50	18.5	10.3	49.5
225.00	16.0	8.0	40.1
247.50	19.2	10.7	51.2
270.00	14.8	8.5	40.4
292.50	17.2	13.9	58.9
315.00	67.5	19.5	125.9
337.50	57.6	15.2	103.2

LOCATION 23

WIND AZIMUTH	UMEAN/UINF (PERCENT)	URMS/UINF (PERCENT)	UMEAN+3*URMS/UINF (PERCENT)
0.00	81.2	10.4	112.3
22.50	86.6	11.7	121.7
45.00	79.4	12.2	115.9
67.50	60.5	17.1	111.8
90.00	23.2	10.8	55.6
112.50	23.5	8.7	49.7
135.00	42.2	10.3	73.0
157.50	50.1	10.3	81.0
180.00	38.5	9.6	67.5
202.50	45.3	15.0	90.3
225.00	13.4	7.0	34.2
247.50	20.3	12.7	58.5
270.00	16.7	9.3	44.6
292.50	14.5	10.2	45.0
315.00	32.6	21.4	97.0
337.50	56.4	16.4	105.6

LOCATION 24

WIND AZIMUTH	UMEAN/UINF (PERCENT)	URMS/UINF (PERCENT)	UMEAN+3*URMS/UINF (PERCENT)
0.00	17.4	10.9	50.2
22.50	16.0	10.7	48.2
45.00	27.8	18.7	83.8
67.50	48.7	23.7	119.8
90.00	41.7	8.9	68.4
112.50	35.2	7.7	58.3
135.00	23.3	10.3	54.1
157.50	18.7	11.5	53.0
180.00	22.6	9.3	50.4
202.50	44.4	12.0	80.5
225.00	56.1	14.0	98.1
247.50	58.9	13.9	100.7
270.00	33.6	13.6	74.4
292.50	8.6	6.6	28.3
315.00	12.5	9.7	41.5
337.50	10.5	8.2	35.1

TABLE 2--PEDESTRIAN WIND VELOCITIES AND TURBULENCE INTENSITIES

BASS BROTHERS OFFICE BUILDINGS, FT. WORTH

LOCATION 25

WIND AZIMUTH	UMEAN/UINF (PERCENT)	URMS/UINF (PERCENT)	UMEAN+3*URMS/UINF (PERCENT)
0.00	35.1	16.9	85.8
22.50	49.4	16.3	98.3
45.00	14.5	10.1	44.9
67.50	25.1	14.1	67.3
90.00	54.2	10.1	84.6
112.50	59.8	9.2	87.4
135.00	50.6	11.6	85.5
157.50	38.2	9.9	67.9
180.00	11.6	6.5	31.1
202.50	13.3	6.4	32.4
225.00	24.8	13.4	64.8
247.50	26.1	15.0	71.0
270.00	40.4	18.4	95.5
292.50	15.4	12.8	53.7
315.00	35.2	19.8	94.8
337.50	30.8	18.3	85.8

LOCATION 26

WIND AZIMUTH	UMEAN/UINF (PERCENT)	URMS/UINF (PERCENT)	UMEAN+3*URMS/UINF (PERCENT)
0.00	10.5	6.5	30.0
22.50	15.7	12.3	52.8
45.00	27.2	14.3	70.2
67.50	46.4	22.3	113.3
90.00	69.8	9.2	97.4
112.50	68.5	10.0	98.5
135.00	63.4	12.4	100.5
157.50	44.4	12.6	82.2
180.00	20.6	8.8	46.9
202.50	27.8	10.1	58.1
225.00	54.4	13.1	93.8
247.50	53.5	13.1	92.9
270.00	47.0	15.4	93.2
292.50	27.9	14.5	71.3
315.00	9.9	7.0	30.9
337.50	9.1	6.0	27.0

TABLE 3

ANNUAL PERCENTAGE FREQUENCIES OF WIND DIRECTION AND SPEED

Based on Summary of Hourly Observations
Stapleton Airfield, Denver
1951-1960
Anemometer Elevation = 72 ft above ground

Annual Hourly Observations of Wind Speed - Miles Per Hour

Direction	0-3	4-7	8-12	13-18	19-24	25-31	32-38	39-46	Total
N	1.1	1.9	2.0	1.1	0.3	0.2	0.1		6.7
NNE	0.7	1.4	1.1	0.9	0.2	0.1	0.1		4.5
NE	1.1	1.9	1.7	0.9	0.2	0.1			5.9
ENE	0.8	1.2	1.1	0.5	0.2	0.1			3.9
E	1.1	1.3	1.3	0.5	0.1				4.3
ESE	0.8	1.1	1.1	0.4	0.1				3.5
SE	1.1	2.1	2.0	0.7	0.1				6.0
SSE	1.1	2.1	2.1	1.0	0.4	0.2			6.9
S	2.1	5.1	7.1	3.7	0.6	0.2			18.8
SSW	1.1	3.4	3.9	1.7	0.1				10.2
SW	1.2	2.3	1.5	0.4	0.1				5.5
WSW	0.9	1.0	0.7	0.2	0.1	0.1			3.0
W	0.8	1.2	0.7	0.6	0.4	0.2	0.1	0.1	4.1
WNW	0.8	0.9	1.0	1.0	0.5	0.4	0.1		4.7
NW	1.3	1.8	1.5	1.2	0.5	0.2			6.5
NNW	0.9	1.7	1.7	0.9	0.2	0.1			5.5
Total	16.9	30.4	30.5	15.7	4.1	1.9	0.4	0.1	100.0

TABLE 4

SUMMARY OF WIND EFFECTS ON PEOPLE

	Beaufort number	Speed (mph)	Effects
Calm, light air	0, 1	0- 3	Calm, no noticeable wind
Light breeze	2	4- 7	Wind felt on face
Gentle breeze	3	8-12	Wind extends light flag Hair is disturbed Clothing flaps
Moderate breeze	4	13-18	Raises dust, dry soil and loose paper Hair disarranged
Fresh breeze	5	19-24	Force of wind felt on body Drifting snow becomes airborne Limit of agreeable wind on land
Strong breeze	6	25-31	Umbrellas used with difficulty Hair blown straight Difficult to walk steadily Wind noise on ears unpleasant Windborne snow above head height (blizzard)
Near gale	7	32-38	Inconvenience felt when walking
Gale	8	39-46	Generally impedes progress Great difficulty with balance in gusts
Strong gale	9	47-54	People blown over by gusts

Note: Table from Reference 4, p. 40.

TABLE 5

CALCULATION OF REFERENCE PRESSURE

1. Basic wind speed from ANSI A58.1 (Ref. 6):

   50-yr fastest mile at 30 ft = 70 mph

   Mean hourly wind speed = $\frac{70}{1.27}$ = 55.1 mph

   Mean hourly gradient wind speed = $55.1 \left(\frac{1000}{30}\right)^{.17}$ = 100.0 mph

   Height of wind-tunnel reference velocity = 38 in or 1270 ft full scale

   Mean hourly wind at wind tunnel velocity reference location at 1270 ft = U_∞ = gradient wind

   Reference pressure = $0.5 \ \rho U_\infty^2 = (0.00256)\ (100.0)^2$ = 25.6 psf

   Use <u>26 psf</u>

2. Loads for 100-yr recurrence wind:

   100-yr fastest mile at 30 ft = 70 mph (ref. 6):

   No change in load.

3. Gust load factors to convert hourly mean integrated loads to various gust durations (see Sect. 4.4):

Gust Duration, sec	Gust Load Factor
10 - 15	$(1.4)^2$ = 1.96
30	$(1.32)^2$ = 1.74
45	$(1.26)^2$ = 1.59

The 30 second gust load factor was used in Table 7.

TABLE 6A. PEAK LOADS FOR CONFIGURATION A : BASS BROTHERS OFFICE BUILDING - PHASE I, FT. WORTH
LARGEST VALUES OF CLADDING LOAD REFERENCE PRESSURE = 26.0 PSF

TAP	AZI-MUTH	PRESS COEFF	ABSOLUTE PEAK (PSF)	POSITIVE PEAK (PSF)	TAP	AZI-MUTH	PRESS COEFF	ABSOLUTE PEAK (PSF)	POSITIVE PEAK (PSF)	TAP	AZI-MUTH	PRESS COEFF	ABSOLUTE PEAK (PSF)	POSITIVE PEAK (PSF)
101	250	1.35	35.2	22.7	151	60	1.42	36.8	10.6	227	320	1.43	37.3	28.9
102	250	2.17	56.4	22.4	152	230	1.28	33.3	13.5	228	320	1.32	34.4	28.1
103	50	1.63	42.3	26.5	153	230	1.59	41.3	17.4	229	320	1.29	33.5	26.9
104	90	1.55	40.2	22.4	154	230	1.33	34.5	11.3	230	110	3.21	83.4	15.6
105	40	1.71	44.5	28.7	155	220	1.54	40.1	14.2	232	330	1.90	49.5	22.8
106	40	1.62	42.0	20.3	156	50	2.09	54.4	14.3	233	160	2.04	53.1	17.3
107	90	1.90	49.4	21.9	157	210	1.67	43.4	13.2	234	110	1.94	50.3	22.4
108	250	1.96	51.0	24.8	158	50	1.55	40.3	16.9	235	150	1.92	49.9	22.4
109	250	2.02	52.6	26.4	159	210	1.96	50.9	8.7	236	140	1.34	34.8	30.0
110	30	2.25	58.4	24.7	160	230	1.39	36.3	9.2	237	330	1.70	44.1	21.5
111	40	1.94	50.3	23.8	161	220	2.44	63.5	8.8	239	320	2.25	58.4	21.0
112	30	1.71	44.5	14.4	162	60	2.32	60.2	13.5	240	330	1.89	49.0	19.7
113	40	1.52	39.6	29.5	163	310	1.86	48.3	15.0	241	120	1.25	32.5	19.5
114	50	1.46	37.9	26.1	164	350	2.59	67.4	16.4	242	150	1.45	37.7	18.8
115	250	1.37	35.6	27.9	165	210	2.05	53.4	11.0	243	160	1.46	38.0	23.5
116	230	1.67	43.3	25.0	166	210	1.92	49.9	12.4	244	140	1.39	36.0	21.8
117	230	1.53	39.8	26.1	167	210	1.73	45.1	14.7	245	310	1.33	34.6	22.8
118	30	1.31	34.2	26.2	168	210	1.39	36.1	18.4	249	120	1.32	34.3	27.7
119	30	1.27	32.9	26.9	169	210	1.42	36.9	19.8	250	330	2.51	65.2	13.7
120	240	1.36	35.3	27.6	170	10	1.13	29.5	17.8	252	120	1.69	44.0	4.3
121	40	1.32	34.3	26.1	171	10	1.37	35.5	19.1	253	210	1.61	41.8	3.0
122	50	1.54	40.1	26.2	201	50	1.26	32.6	22.6	254	180	.94	24.3	15.6
123	50	1.53	39.8	26.5	202	110	1.55	40.4	32.9	255	180	1.00	25.9	17.8
124	220	1.53	39.7	26.9	203	130	1.39	36.1	18.0	256	310	1.30	33.9	19.0
125	30	1.64	42.8	26.7	204	120	1.86	48.4	21.1	257	230	1.66	43.2	16.3
126	30	1.49	38.7	26.4	205	100	1.74	45.2	24.1	258	220	1.84	47.8	18.0
127	40	1.17	30.4	25.5	206	130	1.23	32.0	22.2	259	180	.76	19.8	2.4
128	40	1.55	40.4	24.9	207	130	1.40	36.3	22.8	260	150	.93	24.1	11.3
129	240	1.82	47.2	26.8	208	80	1.53	39.8	23.4	261	70	.92	24.0	9.8
130	50	1.45	37.8	22.7	209	140	1.60	41.6	26.4	262	160	2.11	54.7	1.7
131	50	1.98	51.6	23.8	210	140	1.80	46.8	25.6	263	300	1.37	35.6	7.2
133	40	2.41	62.7	17.3	211	140	1.82	47.4	26.1	264	300	1.78	46.4	2.7
134	40	2.30	59.8	19.4	212	140	1.50	39.0	28.4	265	300	1.36	35.3	9.7
135	50	2.00	52.0	19.5	213	130	1.11	28.7	27.9	266	320	1.27	33.0	13.3
136	60	1.48	38.5	18.0	214	10	1.66	43.1	17.3	267	320	1.62	42.0	10.1
137	240	1.59	41.4	17.1	215	320	1.42	36.9	30.8	268	220	1.71	44.5	8.8
139	230	2.28	59.3	19.1	216	260	1.29	33.6	28.3	269	230	2.71	70.4	15.3
140	50	1.98	51.6	15.4	217	80	1.24	32.2	32.2	270	[illegible]	1.16	30.1	10.9
141	40	2.23	58.0	19.7	218	80	1.24	32.1	32.1	271	310	1.52	39.4	25.3
142	50	2.19	57.0	19.0	219	340	1.23	32.0	29.8	272	240	1.14	29.7	23.7
143	50	1.88	49.0	15.7	220	100	1.36	35.3	27.7	273	170	1.30	33.8	22.5
144	60	1.31	34.0	16.2	221	100	1.56	40.6	26.8	280	320	1.53	39.8	17.8
145	220	1.42	36.9	15.9	222	0	1.68	43.7	22.8	301	50	1.71	44.4	22.9
146	240	1.86	48.3	19.5	223	310	1.32	34.2	25.8	302	210	2.06	53.4	32.2
147	240	3.19	83.0	19.9	224	70	1.08	28.2	28.2	303	220	1.35	35.2	28.6
148	40	1.72	44.8	16.4	225	140	1.24	32.2	27.5	304	30	1.56	40.6	24.9
149	60	1.35	35.1	16.9	225	140	1.24	32.2	27.5	305	60	1.55	40.2	23.2
150	40	2.37	61.7	14.6	226	320	1.34	34.7	32.2	306	130	1.20	31.3	18.6

TABLE 6A. PEAK LOADS FOR CONFIGURATION A : BASS BROTHERS OFFICE BUILDING - PHASE I, FT. WORTH
LARGEST VALUES OF CLADDING LOAD REFERENCE PRESSURE = 26.0 PSF

TAP	AZI-MUTH	PRESS COEFF	ABSOLUTE PEAK ---- PSF	POSITIVE PEAK ----	TAP	AZI-MUTH	PRESS COEFF	ABSOLUTE PEAK ---- PSF	POSITIVE PEAK ----	TAP	AZI-MUTH	PRESS COEFF	ABSOLUTE PEAK ---- PSF	POSITIVE PEAK ----
307	90	1.69	43.9	24.1	359	0	1.16	30.1	20.8	414	140	1.75	45.6	29.4
308	70	2.18	56.8	18.8	360	0	1.33	34.5	15.7	415	140	2.56	66.7	24.2
309	60	1.21	31.5	24.6	361	250	1.37	35.6	20.8	416	140	1.47	38.3	29.2
310	60	1.16	30.0	19.4	362	60	1.63	42.5	27.5	417	160	1.38	36.0	29.1
311	80	1.49	38.8	29.7	363	150	1.81	47.1	30.2	418	150	1.27	33.0	29.9
312	70	1.86	48.3	22.2	364	150	1.46	38.0	24.9	419	150	1.84	47.9	29.7
313	220	2.52	65.5	27.1	365	160	1.92	49.9	18.6	420	140	1.61	42.0	28.1
314	220	2.25	58.5	28.8	366	50	2.16	56.3	14.7	421	150	1.87	48.7	28.3
315	230	1.67	43.3	29.2	367	140	1.45	37.7	18.8	422	160	1.77	45.9	24.9
316	230	1.95	50.6	24.9	368	60	1.54	40.1	13.3	423	140	1.93	50.3	29.1
317	180	1.09	28.2	28.2	369	10	1.09	28.3	17.5	424	130	1.81	47.1	27.2
318	70	1.50	39.1	26.9	370	10	.98	25.4	24.7	425	140	1.33	34.5	26.9
319	80	1.65	42.8	28.5	371	350	1.39	36.1	28.0	426	300	1.16	30.1	27.4
320	60	1.65	42.9	26.7	372	10	1.16	30.1	24.1	427	260	1.12	29.1	29.1
321	60	1.57	40.8	30.5	373	40	1.57	40.8	22.6	428	310	1.19	30.8	26.8
322	60	1.30	33.9	17.9	374	30	1.31	34.1	26.8	429	150	1.44	37.6	29.5
323	70	1.59	41.3	24.6	375	130	1.07	27.9	27.9	430	150	1.35	35.1	27.8
324	50	1.80	46.8	26.0	376	350	1.83	47.6	14.4	431	150	1.38	35.8	27.8
325	50	1.84	47.9	29.8	377	50	1.83	47.7	16.5	432	330	1.39	36.0	23.9
326	80	1.46	38.1	28.2	378	350	1.93	50.2	17.8	433	320	1.69	44.0	21.5
327	200	1.68	43.8	28.7	379	0	1.32	34.4	14.9	434	320	1.44	37.5	23.4
328	70	1.58	41.0	30.5	380	20	1.52	39.6	35.3	435	320	1.53	39.8	24.7
329	120	1.91	49.5	27.8	381	10	1.22	31.6	18.7	436	320	1.10	28.6	23.6
330	70	1.73	44.9	26.6	382	180	1.41	36.7	11.6	437	330	1.33	34.6	22.0
331	60	1.75	45.4	27.4	383	260	1.85	48.2	18.0	438	330	1.47	38.1	22.1
332	60	1.64	42.7	28.9	384	40	1.90	49.5	17.5	439	330	1.97	51.2	21.0
333	100	1.38	35.9	28.9	385	210	2.04	53.0	9.2	440	150	1.53	39.7	24.5
334	150	1.14	29.6	29.6	386	40	1.83	47.7	10.7	441	320	1.55	40.3	26.1
335	60	1.33	34.5	28.8	387	230	1.64	42.6	13.9	442	130	1.88	48.9	25.8
336	60	1.60	41.7	29.1	388	10	1.91	49.5	4.1	443	150	1.58	41.1	26.0
337	60	1.38	35.9	28.7	389	0	1.68	43.8	17.1	444	130	1.78	46.3	26.4
338	60	1.14	29.7	22.4	390	50	1.47	38.1	15.9	445	140	1.70	44.2	19.8
339	240	1.55	40.3	13.7	391	50	1.57	40.9	12.4	446	140	1.64	42.8	23.3
340	50	2.49	64.8	23.8	392	190	1.72	44.8	-1.2	447	140	1.84	47.8	21.0
341	50	2.00	51.9	28.2	393	30	2.33	60.6	2.4	449	320	1.96	50.9	17.2
342	230	1.62	42.2	25.8	401	320	1.35	35.1	24.6	450	310	1.95	50.6	15.6
343	230	1.58	41.0	27.7	402	320	1.18	30.6	26.0	451	310	2.35	61.0	16.9
344	240	1.48	38.6	27.3	403	300	1.72	44.8	21.4	452	140	2.11	54.8	14.0
345	60	1.68	43.7	24.0	404	110	1.65	42.9	15.5	453	120	2.10	54.5	17.5
346	60	1.35	35.0	23.3	405	110	1.27	32.9	21.2	454	310	2.12	55.1	18.0
347	60	1.31	34.1	20.7	406	340	1.62	42.1	26.7	455	320	2.06	53.5	18.9
348	60	1.29	33.6	14.9	407	10	1.34	34.9	28.7	456	310	1.70	44.2	18.5
349	230	2.60	67.7	23.0	408	310	1.67	43.5	26.4	457	310	1.70	44.3	19.1
350	230	2.92	75.8	26.5	409	100	1.90	49.4	20.0	458	330	1.14	29.5	17.1
352	250	1.35	35.2	25.9	410	100	1.89	49.2	21.6	459	140	1.31	34.0	19.8
353	70	1.45	37.6	24.7	411	140	2.32	60.2	27.5	460	20	1.42	36.9	17.4
354	60	1.73	45.0	23.5	412	340	1.68	43.7	25.5	461	120	2.25	58.5	17.4
355	60	2.10	54.6	22.8	413	110	1.61	42.0	28.7	462	310	2.08	54.2	18.0

TABLE 6A. PEAK LOADS FOR CONFIGURATION A : BASS BROTHERS OFFICE BUILDING - PHASE I, FT. WORTH
LARGEST VALUES OF CLADDING LOAD REFERENCE PRESSURE = 26.0 PSF

TAP	AZI-MUTH	PRESS COEFF	ABSOLUTE PEAK	POSITIVE PEAK
			---- PSF	----
463	330	2.59	67.3	19.4
464	350	1.20	31.3	21.8
465	140	1.60	41.5	19.9
466	320	2.00	52.0	14.2
467	320	2.15	55.9	13.5
468	350	1.29	33.5	15.1
469	0	1.40	36.3	10.7
470	0	1.38	35.9	14.6
471	150	1.69	44.0	21.9
472	340	1.97	51.2	15.9
473	0	2.60	67.6	8.4
474	340	1.53	39.8	5.0
475	350	1.42	37.0	7.5
476	130	1.43	37.2	6.9
477	280	1.76	45.7	15.9
478	140	2.07	53.9	16.6
479	350	1.74	45.2	13.9
480	350	1.37	35.6	21.6
481	350	1.46	38.0	21.7
482	280	1.62	42.0	13.4
483	140	1.64	42.6	5.5
484	140	1.52	39.5	28.2
702	130	1.14	29.6	15.9
703	330	2.26	58.7	31.9
704	30	1.58	41.2	19.6
801	260	1.75	45.4	10.2
802	320	1.28	33.3	13.7
803	350	1.65	43.0	18.3
804	10	1.54	40.0	13.3
805	10	2.35	61.0	15.7
806	120	1.65	42.8	13.3
807	120	1.53	39.8	13.9
808	60	1.32	34.2	12.4
809	130	1.46	38.0	17.1
810	40	1.43	37.1	12.1
811	200	2.20	57.2	21.9
905	320	2.53	65.8	8.7
906	340	1.96	51.0	6.4
907	210	1.85	48.2	14.1
908	340	2.21	57.6	7.6
909	350	1.10	28.5	23.6
910	50	2.29	59.7	.6
911	340	1.47	38.3	4.7
912	10	1.42	37.0	3.4
913	10	1.37	35.6	4.8
915	260	1.91	49.6	6.4

TABLE 6A. PEAK LOADS FOR CONFIGURATION B : BASS BROTHERS OFFICE BUILDING - PHASE I, FT. WORTH
LARGEST VALUES OF CLADDING LOAD REFERENCE PRESSURE = 26.0 PSF

TAP	AZI-MUTH	PRESS COEFF	ABSOLUTE PEAK (PSF)	POSITIVE PEAK (PSF)	TAP	AZI-MUTH	PRESS COEFF	ABSOLUTE PEAK (PSF)	POSITIVE PEAK (PSF)	TAP	AZI-MUTH	PRESS COEFF	ABSOLUTE PEAK (PSF)	POSITIVE PEAK (PSF)
147	230	3.40	88.4	.4	269	230	2.29	59.6	8.8	350	228	3.45	89.6	27.9
230	114	3.17	82.3	16.7	349	228	2.81	73.0	20.4					

TABLE 6B. COMPARISON OF CONFIGURATIONS A AND B : BASS BROTHERS OFFICE BUILDING - PHASE I, FT. WORTH
TAPS WHERE ABSOLUTE PEAK LOAD FOR CONFIG. B EXCEEDED THAT FOR CONFIG. A BY 5 PSF
REF. PRESSURE = 26.0 PSF

TAP	AZIMUTH	A CONFIG. PSF LOAD	AZIMUTH	B CONFIG. PSF LOAD
147	240	83.0	230	88.4
349	230	67.7	228	73.0
350	230	75.8	228	89.6

TABLE 6A. PEAK LOADS FOR CONFIGURATION C : BASS BROTHERS OFFICE BUILDING - PHASE II, FT. WORTH
LARGEST VALUES OF CLADDING LOAD REFERENCE PRESSURE = 26.0 PSF

TAP	AZI-MUTH	PRESS COEFF	ABSOLUTE PEAK ---- PSF	POSITIVE PEAK ----	TAP	AZI-MUTH	PRESS COEFF	ABSOLUTE PEAK ---- PSF	POSITIVE PEAK ----	TAP	AZI-MUTH	PRESS COEFF	ABSOLUTE PEAK ---- PSF	POSITIVE PEAK ----
101	50	1.29	33.5	23.1	149	30	1.39	36.0	21.8	198	200	1.14	29.6	14.4
102	40	1.58	41.1	28.3	150	30	1.32	34.2	25.7	201	80	1.26	32.7	32.7
103	40	1.30	33.8	29.6	151	310	.96	25.0	25.0	202	280	1.13	29.3	27.8
104	50	1.21	31.6	26.2	152	240	1.02	26.5	26.2	203	130	1.25	32.6	28.6
105	290	1.12	29.1	29.1	153	220	1.48	38.6	25.0	204	160	1.17	30.5	18.2
106	300	1.04	26.9	26.9	154	220	1.45	37.7	23.4	205	160	1.06	27.7	20.2
107	150	1.13	29.5	26.6	155	250	1.33	34.7	23.6	206	330	1.29	33.5	21.1
108	260	1.79	46.4	22.6	156	50	.99	25.9	23.2	207	330	1.20	31.1	25.3
109	60	.94	24.3	22.5	157	50	1.14	29.7	29.4	208	90	1.06	27.5	27.5
110	310	1.01	26.3	26.3	158	50	1.04	26.9	24.5	209	130	1.11	28.9	22.4
111	240	1.37	35.7	30.9	159	50	1.02	26.6	25.0	210	130	1.41	36.8	22.8
112	260	1.43	37.3	23.6	160	50	1.24	32.3	23.3	211	330	1.82	47.3	28.1
113	40	2.34	60.7	28.2	161	260	1.30	33.8	23.3	212	130	1.09	28.4	28.4
114	40	1.61	41.8	30.4	162	180	1.48	38.4	21.9	213	140	1.21	31.4	26.5
115	80	1.43	37.1	30.7	163	180	1.20	31.3	20.4	214	340	1.17	30.5	28.4
116	310	1.23	32.0	32.0	164	190	1.29	33.5	14.8	215	330	1.50	38.9	30.9
117	50	.97	25.2	24.8	165	40	1.15	30.0	21.3	216	330	1.10	28.7	26.2
118	310	1.23	32.1	32.1	166	60	1.36	35.2	28.5	217	60	1.07	27.7	27.7
119	260	1.54	40.0	31.1	167	60	1.26	32.9	23.8	218	130	1.24	32.2	31.4
120	290	1.30	33.7	27.3	168	50	1.27	32.9	19.8	219	340	1.53	39.7	27.2
121	260	1.19	30.9	28.0	169	60	1.60	41.5	19.6	220	340	1.81	47.1	27.4
122	270	1.62	42.1	16.7	170	220	1.49	38.8	18.7	221	330	1.25	32.4	27.6
123	270	2.46	64.0	27.8	171	240	1.41	36.7	14.5	222	330	1.40	36.5	27.7
124	230	1.43	37.1	26.3	172	240	1.32	34.4	12.1	223	340	1.55	40.3	26.4
125	40	1.31	34.0	29.7	173	250	1.65	42.9	13.8	224	220	1.32	34.3	27.0
126	50	1.20	31.2	25.5	174	310	1.08	28.1	28.1	225	330	1.01	26.3	26.0
127	50	1.31	34.0	33.6	176	320	1.67	43.5	8.6	226	80	1.02	26.6	26.6
128	270	1.21	31.6	31.3	177	50	1.30	33.8	18.4	227	50	1.04	27.1	27.1
129	310	1.44	37.5	25.6	178	170	1.18	30.6	24.8	228	140	1.22	31.7	26.8
130	210	1.55	40.4	22.3	179	320	1.35	35.1	35.1	229	60	1.02	26.4	26.4
131	240	1.41	36.7	25.3	180	210	1.07	27.8	20.7	230	340	1.17	30.4	27.7
132	40	1.23	31.9	29.0	181	200	1.36	35.4	12.1	231	340	1.31	33.9	29.1
133	310	1.06	27.6	27.6	182	330	1.96	51.0	16.4	232	340	1.25	32.5	26.5
134	310	1.10	28.6	28.6	183	50	2.18	56.8	15.8	233	30	1.20	31.1	24.5
135	320	1.13	29.3	29.3	184	310	1.07	27.8	10.5	234	330	1.20	31.3	26.4
136	250	1.20	31.3	30.4	185	60	1.15	29.9	13.0	235	140	1.13	29.4	26.0
137	250	1.15	29.9	26.9	186	60	2.10	54.5	13.9	236	140	1.12	29.2	25.8
138	270	1.08	28.0	23.0	187	60	1.29	33.4	13.5	237	340	.93	24.2	23.2
139	60	1.25	32.6	18.3	188	60	1.20	31.1	14.1	238	140	1.12	29.2	24.8
140	240	1.24	32.2	27.2	189	70	1.01	26.2	17.1	239	50	.96	24.9	24.9
141	290	1.22	31.8	27.3	190	40	1.01	26.2	17.1	240	260	1.26	32.7	24.0
142	240	1.11	28.7	27.5	191	90	.91	23.6	18.9	241	140	1.62	42.1	24.5
143	320	1.09	28.3	28.3	192	320	.67	17.3	13.0	242	300	1.09	28.2	23.6
144	50	1.19	30.9	29.2	193	70	1.70	44.2	13.4	243	300	1.43	37.1	24.7
145	320	1.33	34.6	34.6	194	70	1.00	26.0	14.6	244	140	1.51	39.2	25.2
146	320	1.27	32.9	32.9	195	60	.82	21.3	18.8	245	330	1.53	39.9	21.3
147	50	1.08	28.1	24.9	196	320	.81	21.1	21.1	247	340	1.10	28.5	26.6
148	50	1.30	33.7	16.3	197	50	.86	22.2	22.2	248	150	1.37	35.7	23.4

TABLE 6A. PEAK LOADS FOR CONFIGURATION C : BASS BROTHERS OFFICE BUILDING - PHASE II, FT. WORTH
LARGEST VALUES OF CLADDING LOAD REFERENCE PRESSURE = 26.0 PSF

TAP	AZI-MUTH	PRESS COEFF	ABSOLUTE PEAK ---- PSF ----	POSITIVE PEAK ---- PSF ----	TAP	AZI-MUTH	PRESS COEFF	ABSOLUTE PEAK ---- PSF ----	POSITIVE PEAK ---- PSF ----	TAP	AZI-MUTH	PRESS COEFF	ABSOLUTE PEAK ---- PSF ----	POSITIVE PEAK ---- PSF ----
249	330	1.01	26.3	20.0	316	220	1.40	36.4	26.4	364	160	1.03	26.7	26.7
250	120	1.34	34.9	21.4	317	200	1.51	39.2	26.8	365	150	.90	23.3	23.3
251	340	1.47	38.2	24.9	318	160	1.10	28.7	28.7	366	30	1.02	26.5	25.4
252	160	1.12	29.2	22.8	319	150	1.21	31.4	31.4	401	130	1.19	31.0	28.2
253	340	1.07	27.7	23.3	320	150	1.25	32.4	32.4	402	120	1.32	34.3	30.7
254	150	1.58	41.1	23.5	321	160	1.09	28.4	28.4	403	320	1.10	28.5	25.8
255	300	1.23	32.0	23.2	322	250	1.17	30.5	27.3	404	290	1.10	28.6	22.0
256	310	1.40	36.3	22.5	323	240	1.42	36.9	27.4	405	320	1.62	42.0	29.5
257	270	1.05	27.3	23.5	324	220	1.19	30.9	18.9	406	150	1.39	36.2	26.6
258	130	1.49	38.8	22.4	325	50	1.31	34.0	26.1	407	150	1.74	45.4	29.2
259	150	1.52	39.6	19.5	326	240	1.14	29.7	26.7	408	310	1.78	46.3	27.4
260	150	1.77	46.0	21.4	327	150	1.11	28.8	28.8	409	260	1.15	29.9	29.9
261	140	1.19	31.0	23.6	328	60	1.04	26.9	25.5	410	260	1.28	33.3	33.3
262	330	1.51	39.3	23.1	329	70	1.25	32.4	26.6	411	260	1.23	31.9	31.9
263	320	1.38	35.8	21.5	330	70	1.47	38.2	29.1	412	320	1.37	35.5	31.9
264	320	1.12	29.2	21.8	331	250	1.62	42.2	29.1	413	150	1.31	34.1	29.0
265	320	1.20	31.1	21.1	332	40	1.31	34.1	15.3	414	270	1.30	33.7	17.6
266	150	1.47	38.1	18.3	333	40	1.01	26.4	20.5	415	140	1.07	27.7	24.6
267	130	1.20	31.3	18.6	334	50	1.24	32.2	22.4	416	150	1.02	26.5	26.5
268	130	1.13	29.5	28.8	335	50	1.50	39.0	23.9	417	230	1.09	28.3	28.3
269	340	1.22	31.8	27.9	336	60	1.11	28.8	21.5	418	270	1.12	29.1	29.1
270	340	1.44	37.5	16.9	337	50	1.34	34.7	22.4	419	230	1.13	29.3	29.3
271	180	1.18	30.6	15.0	338	60	1.18	30.8	21.7	420	160	1.25	32.6	26.6
272	330	1.10	28.7	21.1	339	60	1.65	42.9	23.0	421	160	1.24	32.2	26.4
273	160	1.86	48.3	16.1	340	140	1.86	48.4	16.6	422	140	1.24	32.3	19.1
274	170	1.45	37.7	20.6	341	40	1.33	34.5	14.0	423	150	1.18	30.6	24.8
275	320	.88	22.8	18.4	342	40	1.16	30.2	17.4	424	140	1.00	25.9	24.2
276	320	1.26	32.7	21.1	343	250	1.27	32.9	21.0	425	270	.99	25.8	25.8
277	120	.88	22.8	17.6	344	250	1.19	30.8	23.3	426	150	1.04	27.1	25.3
278	40	1.78	46.3	18.1	345	250	1.32	34.4	22.8	427	150	1.19	30.9	23.6
279	150	.99	25.7	20.5	346	60	1.26	32.8	20.0	428	150	1.12	29.2	23.2
280	150	1.27	33.0	23.5	347	70	1.19	31.0	21.3	429	150	1.03	26.9	25.0
281	330	1.12	29.0	22.3	348	260	1.50	39.0	19.7	430	300	2.26	58.8	20.4
301	50	1.17	30.3	24.2	349	40	1.59	41.4	9.7	431	140	.99	25.8	23.9
302	70	1.64	42.7	23.7	350	240	1.46	38.0	13.0	432	270	.97	25.3	25.3
303	30	1.51	39.3	30.4	351	230	1.42	36.8	27.5	433	270	1.06	27.4	27.4
304	230	1.09	28.5	24.4	352	50	1.24	32.2	17.7	434	150	1.31	33.9	27.6
305	230	1.34	34.9	24.1	353	70	1.25	32.4	19.5	435	140	1.47	38.3	26.6
306	60	1.34	34.8	22.9	354	250	1.52	39.5	18.7	436	150	.98	25.4	19.4
307	240	1.21	31.4	29.5	355	40	1.11	28.8	15.9	437	150	1.15	29.9	22.0
308	60	1.24	32.3	27.4	356	40	1.03	26.8	15.2	438	130	1.57	40.9	21.3
309	60	1.47	38.1	29.2	357	50	1.07	27.8	25.2	439	130	1.58	41.0	17.8
310	220	2.24	58.3	26.2	358	60	1.05	27.2	20.5	440	140	1.33	34.7	16.6
311	220	1.49	38.7	22.5	359	40	.96	25.0	22.6	441	310	1.27	33.1	16.1
312	220	1.98	51.5	22.2	360	50	1.54	40.1	22.7	442	140	1.14	29.5	21.6
313	230	1.25	32.6	29.1	361	70	1.70	44.3	19.8	443	140	1.16	30.1	25.9
314	70	1.43	37.2	28.5	362	20	.78	20.3	9.5	444	140	1.10	28.6	22.9
315	130	1.06	27.5	27.5	363	160	.96	25.1	25.1	445	140	1.40	36.5	17.8

TABLE 6A. PEAK LOADS FOR CONFIGURATION C : BASS BROTHERS OFFICE BUILDING - PHASE II, FT. WORTH
LARGEST VALUES OF CLADDING LOAD REFERENCE PRESSURE = 26.0 PSF

TAP	AZI-MUTH	PRESS COEFF	ABSOLUTE PEAK ---- PSF ----	POSITIVE PEAK ---- PSF ----	TAP	AZI-MUTH	PRESS COEFF	ABSOLUTE PEAK ---- PSF ----	POSITIVE PEAK ---- PSF ----	TAP	AZI-MUTH	PRESS COEFF	ABSOLUTE PEAK ---- PSF ----	POSITIVE PEAK ---- PSF ----
446	130	1.44	37.5	16.0	459	130	1.49	38.7	16.8	901	140	1.42	36.9	36.9
447	150	1.79	46.5	19.0	460	130	1.16	30.2	18.3	902	240	1.32	34.4	27.4
448	140	1.40	36.4	16.3	461	150	1.37	35.6	15.4	903	130	1.48	38.6	14.8
449	330	1.63	42.4	17.2	801	330	1.36	35.3	8.9	904	180	1.16	30.2	18.1
450	310	1.33	34.6	18.2	802	190	1.26	32.8	8.0	905	230	1.19	30.9	15.6
451	140	1.16	30.1	21.5	803	70	1.22	31.8	16.1	906	210	1.18	30.7	13.0
452	140	1.21	31.6	16.6	804	40	.98	25.4	13.9	907	200	2.20	57.1	17.4
453	150	1.30	33.8	15.7	805	20	.80	20.9	14.6	908	0	1.23	32.0	15.4
454	30	1.12	29.2	13.8	806	330	.98	25.4	16.4	909	320	1.14	29.6	16.5
455	140	1.91	49.5	16.8	807	80	.98	25.4	9.3	910	300	1.25	32.5	13.1
456	140	1.59	41.2	16.4	808	160	.99	25.9	11.7	911	270	1.39	36.1	18.2
457	150	1.34	34.7	11.8	809	40	1.00	26.0	26.0	912	140	1.19	30.9	18.0
458	130	1.08	28.1	12.6	810	50	1.31	34.2	14.1	913	30	1.60	41.7	17.2

TABLE 7. BASE SHEAR AND MOMENT SUMMARY : BASS BROTHERS - FT. WORTH, TEXAS
CONFIGURATION A REFERENCE PRESSURE 26.0 GUST FACTOR 1.32

AZIMUTH DEGREES	X-SHEAR KIPS	Y-SHEAR KIPS	X-MOMENT	Y-MOMENT 1000-FT-KIPS	Z-MOMENT
0	-1986.6	-2643.7	644.5	-471.5	89.2
10	-2143.9	-2320.4	564.6	-507.4	102.9
20	-2197.1	-1686.5	417.7	-526.2	114.3
30	-2226.5	-856.1	225.7	-531.6	127.1
40	-2240.4	-182.2	60.4	-532.8	132.8
50	-2022.3	-78.2	28.1	-466.7	114.1
60	-1923.6	-501.9	139.5	-441.7	89.8
70	-1974.6	-680.8	192.4	-469.9	80.4
80	-1979.5	-562.3	164.8	-491.6	79.7
90	-848.9	-266.8	76.2	-177.1	102.0
100	-84.7	-48.1	54.6	-4.1	91.8
110	-104.6	435.2	-58.1	-36.3	75.2
120	-320.8	1316.9	-308.1	-108.0	65.9
130	-301.0	1811.1	-455.0	-86.0	81.3
140	-353.2	1905.1	-477.3	-113.3	84.1
150	-169.8	1718.5	-436.4	-70.2	65.9
160	401.5	1362.0	-348.0	66.3	56.2
170	800.6	1406.8	-363.1	157.3	47.9
180	1322.1	1874.8	-466.3	289.0	30.5
190	1018.8	1802.8	-429.6	225.8	49.6
200	1332.7	1476.6	-342.3	313.9	70.8
210	1690.2	1239.5	-255.1	420.7	93.6
220	1959.4	798.0	-138.2	504.0	93.9
230	2091.3	330.4	-41.2	529.0	83.3
240	2107.9	83.0	-17.2	540.9	59.6
250	2126.2	-518.1	124.0	547.7	37.7
260	2047.3	-1282.2	329.7	538.3	38.3
270	1651.7	-1414.7	368.0	441.4	41.0
280	1521.6	-1607.4	397.2	386.5	46.3
290	1198.6	-1694.3	428.2	306.1	60.9
300	711.3	-1626.5	420.4	157.4	70.3
310	283.2	-1798.6	456.3	38.1	79.5
320	-108.4	-1898.0	475.9	-52.9	70.4
330	-425.2	-2189.4	537.8	-111.0	53.7
340	-1007.2	-2494.6	603.7	-239.5	53.8
350	-1649.7	-2678.9	651.0	-394.6	71.5

TABLE 7. BASE SHEAR AND MOMENT SUMMARY : BASS BROTHERS OFFICE BUILDING - PHASE I, FT. WORTH
CONFIGURATION A REFERENCE PRESSURE 26.0 GUST FACTOR 1.32

AZIMUTH DEGREES	X-SHEAR KIPS	Y-SHEAR KIPS	X-MOMENT	Y-MOMENT 1000-FT-KIPS	Z-MOMENT
0	-1986.6	-2643.7	644.5	-471.5	37.8
10	-2143.9	-2320.4	564.6	-507.4	47.5
20	-2197.1	-1686.5	417.7	-526.2	56.7
30	-2226.5	-856.1	225.7	-531.6	64.6
40	-2240.4	-182.2	60.4	-532.8	63.5
50	-2022.3	-78.2	28.1	-466.7	44.5
60	-1923.6	-501.9	139.5	-441.7	22.1
70	-1974.6	-680.8	192.4	-469.9	15.6
80	-1979.5	-562.3	164.8	-491.6	18.9
90	-848.9	-266.8	76.2	-177.1	38.1
100	-84.7	-48.1	54.6	-4.1	27.5
110	-104.6	435.2	-58.1	-36.3	11.5
120	-320.8	1316.9	-308.1	-108.0	7.6
130	-301.0	1811.1	-455.0	-86.0	20.9
140	-353.2	1905.1	-477.3	-113.3	18.6
150	-169.8	1718.5	-436.4	-70.2	6.5
160	401.5	1362.0	-348.0	66.3	5.8
170	800.6	1406.8	-363.1	157.3	3.9
180	1322.1	1874.8	-466.3	289.0	-4.9
190	1018.8	1802.8	-429.6	225.8	7.6
200	1332.7	1476.6	-342.3	313.9	24.4
210	1690.2	1239.5	-255.1	420.7	43.5
220	1959.4	798.0	-138.2	504.0	41.9
230	2091.3	330.4	-41.2	529.0	28.2
240	2107.9	83.0	-17.2	540.9	6.0
250	2126.2	-518.1	124.0	547.7	-8.6
260	2047.3	-1282.2	329.7	538.3	-.9
270	1651.7	-1414.7	368.0	441.4	10.8
280	1521.6	-1607.4	397.2	386.5	15.2
290	1198.6	-1694.3	428.2	306.1	27.8
300	711.3	-1626.5	420.4	157.4	34.9
310	283.2	-1798.6	456.3	38.1	34.2
320	-108.4	-1898.0	475.9	-52.9	20.2
330	-425.2	-2189.4	537.8	-111.0	4.5
340	-1007.2	-2494.6	603.7	-239.5	6.7
350	-1649.7	-2678.9	651.0	-394.6	23.9

TABLE 7. BASE SHEAR AND MOMENT SUMMARY : BASS BROTHERS OFFICE BUILDING - PHASE II, FT. WORTH
CONFIGURATION C REFERENCE PRESSURE 26.0 GUST FACTOR 1.32

AZIMUTH DEGREES	X-SHEAR KIPS	Y-SHEAR KIPS	X-MOMENT	Y-MOMENT 1000-FT-KIPS	Z-MOMENT
0	-1935.3	635.1	-171.4	-495.3	-22.0
10	-1910.3	1194.8	-301.8	-478.9	-11.8
20	-1780.5	1552.1	-403.4	-443.4	6.8
30	-1418.8	1803.3	-466.6	-336.9	26.7
40	-757.5	1997.1	-528.2	-154.7	39.9
50	-59.4	1891.4	-504.9	12.0	27.0
60	135.3	1968.2	-532.0	41.0	3.3
70	665.3	2078.0	-571.1	162.8	-8.8
80	1315.2	2162.8	-598.3	351.0	-2.1
90	1415.5	2223.8	-599.8	365.9	1.5
100	1651.9	2106.3	-566.5	417.8	16.7
110	1800.9	1713.5	-463.6	455.7	30.2
120	1848.6	1005.3	-257.5	481.2	38.6
130	1763.5	367.9	-66.8	485.5	30.1
140	1855.7	152.0	-22.3	519.1	14.8
150	1904.9	109.3	-37.6	543.8	-.1
160	1971.3	-341.9	77.7	562.7	-13.0
170	1486.8	-596.4	154.0	438.4	-1.9
180	1076.7	-752.1	193.3	344.0	-.5
190	1041.2	-1154.0	302.5	324.6	12.3
200	1182.0	-1377.4	365.2	357.8	27.0
210	836.2	-1156.3	304.1	262.4	15.8
220	347.7	-1273.9	349.2	123.7	9.6
230	115.3	-1439.8	392.1	52.1	2.7
240	190.5	-1537.1	411.8	80.8	-11.8
250	447.9	-1636.7	436.9	156.5	-21.6
260	435.3	-1704.5	470.5	146.9	-20.9
270	191.1	-1452.2	400.9	72.5	-2.4
280	56.4	-594.2	124.5	13.9	-1.8
290	-28.7	-433.9	75.5	8.4	-6.3
300	-347.7	-414.0	94.4	-68.3	-17.1
310	-1174.3	-288.2	64.4	-319.2	-22.4
320	-1563.3	-193.6	27.4	-438.3	-14.3
330	-1647.7	-452.0	115.4	-440.0	-24.5
340	-1720.4	-464.1	129.3	-452.0	-34.1
350	-1894.3	133.9	-25.4	-488.2	-32.0

TABLE 7. SHEAR AND MOMENT DIAGRAMS : BASS BROTHERS OFFICE BUILDING - PHASE I, FT. WORTH
WIND DIRECTION 0 CONFIGURATION A REFERENCE PRESSURE 26.0 PSF GUST FACTOR 1.32

FLOOR	HEIGHT FT	X-FORCE KIPS	Y-FORCE KIPS	X-AREA SQ FT	Y-AREA SQ FT	X-PRESS PSF	Y-PRESS PSF	X-SHEAR KIPS	Y-SHEAR KIPS	X-MOMENT 1000-FT-KIPS	Y-MOMENT 1000-FT-KIPS	Z-MOMENT 1000-FT-KIPS
GRND	0.00	-69.8	-67.7	2333	3000	-29.9	-22.6	-1986.6	-2643.7	644.5	-471.5	37.8
2ND	20.00	-89.9	-109.8	3938	3956	-22.8	-27.7	-1916.7	-2575.9	592.3	-432.5	37.3
3RD	42.50	-46.9	-71.0	2145	2329	-21.9	-30.5	-1826.8	-2466.1	535.6	-390.3	33.6
4TH	55.50	-41.7	-66.1	2145	2232	-19.5	-29.6	-1779.9	-2395.1	504.0	-366.9	32.0
5TH	68.50	-37.4	-60.4	2427	2123	-15.4	-28.4	-1738.1	-2329.0	473.3	-344.0	30.6
6TH	81.50	-52.7	-60.9	2427	2123	-21.7	-28.7	-1700.8	-2268.7	443.4	-321.7	29.2
7TH	94.50	-46.4	-72.2	2427	2448	-19.1	-29.5	-1648.1	-2207.8	414.3	-299.9	27.8
8TH	107.50	-54.5	-72.2	2427	2448	-22.5	-29.5	-1601.7	-2135.6	386.0	-278.8	26.2
9TH	120.50	-55.9	-72.3	2427	2448	-23.0	-29.5	-1547.2	-2063.5	358.7	-258.3	24.8
10TH	133.50	-57.3	-72.4	2427	2448	-23.6	-29.6	-1491.3	-1991.2	332.4	-238.6	23.7
11TH	146.50	-59.8	-72.8	2427	2448	-24.6	-29.8	-1434.1	-1918.8	307.0	-219.5	22.7
12TH	159.50	-60.6	-74.1	2427	2448	-25.0	-30.3	-1374.3	-1845.9	282.5	-201.3	21.9
13TH	172.50	-61.3	-75.4	2427	2448	-25.3	-30.8	-1313.7	-1771.8	259.0	-183.8	21.2
14TH	185.50	-62.0	-76.7	2427	2448	-25.6	-31.3	-1252.4	-1696.4	236.4	-167.1	20.5
15TH	198.50	-62.7	-78.0	2427	2448	-25.9	-31.9	-1190.3	-1619.7	214.9	-151.3	19.8
16TH	211.50	-62.8	-78.4	2427	2448	-25.9	-32.0	-1127.6	-1541.6	194.3	-136.2	19.2
17TH	224.50	-62.9	-78.7	2427	2448	-25.9	-32.1	-1064.8	-1463.2	174.8	-121.9	18.6
18TH	237.50	-62.9	-79.0	2427	2448	-25.9	-32.3	-1001.9	-1384.6	156.3	-108.5	18.1
19TH	250.50	-63.0	-79.2	2427	2448	-25.9	-32.4	-939.0	-1305.6	138.8	-95.9	17.5
20TH	263.50	-63.0	-79.5	2427	2448	-26.0	-32.5	-876.1	-1226.4	122.4	-84.1	17.0
21ST	276.50	-63.1	-79.8	2427	2448	-26.0	-32.6	-813.1	-1146.8	106.9	-73.1	16.5
22ND	289.50	-63.1	-80.1	2427	2448	-26.0	-32.7	-750.0	-1067.0	92.5	-63.0	16.0
23RD	302.50	-63.0	-80.4	2427	2448	-26.0	-32.9	-686.9	-986.9	79.2	-53.6	15.5
24TH	315.50	-61.9	-80.9	2427	2448	-25.5	-33.1	-623.9	-906.5	66.9	-45.1	15.0
25TH	328.50	-60.8	-81.4	2427	2448	-25.1	-33.3	-562.0	-825.6	55.6	-37.4	14.4
26TH	341.50	-59.8	-81.9	2427	2448	-24.6	-33.4	-501.2	-744.2	45.4	-30.5	13.8
27TH	354.50	-58.7	-82.4	2427	2448	-24.2	-33.6	-441.4	-662.3	36.3	-24.4	13.1
28TH	367.50	-57.7	-82.9	2427	2448	-23.8	-33.8	-382.7	-579.9	28.2	-19.0	12.2
29TH	380.50	-53.9	-81.1	2427	2448	-22.2	-33.1	-325.1	-497.0	21.2	-14.4	11.3
30TH	393.50	-57.2	-81.8	2473	2637	-23.1	-31.0	-271.1	-415.9	15.3	-10.5	10.2
31ST	407.50	-59.3	-102.9	3173	3202	-18.7	-32.1	-213.9	-334.1	10.0	-7.1	9.4
32ND	424.50	-47.4	-95.4	3173	3018	-14.9	-31.6	-154.6	-231.2	5.2	-4.0	8.1
33RD	441.50	-39.7	-68.7	2297	2308	-17.3	-29.8	-107.2	-135.9	2.1	-1.8	5.9
34TH	454.50	-52.8	-40.8	2297	1181	-23.0	-34.5	-67.5	-67.1	.8	-.6	3.7
35TH	467.50	-14.7	-26.4	433	704	-33.9	-37.4	-14.7	-26.4	.2	-.1	.7

TABLE 7. SHEAR AND MOMENT DIAGRAMS : BASS BROTHERS OFFICE BUILDING - PHASE I, FT. WORTH
WIND DIRECTION 10 CONFIGURATION A REFERENCE PRESSURE 26.0 PSF GUST FACTOR 1.32

FLOOR	HEIGHT FT	X-FORCE KIPS	Y-FORCE KIPS	X-AREA SQ FT	Y-AREA SQ FT	X-PRESS PSF	Y-PRESS PSF	X-SHEAR KIPS	Y-SHEAR KIPS	X-MOMENT 1000-FT-KIPS	Y-MOMENT 1000-FT-KIPS	Z-MOMENT 1000-FT-KIPS
GRND	0.00	-70.2	-63.3	2333	3000	-30.1	-21.1	-2143.9	-2320.4	564.6	-507.4	47.5
2ND	20.00	-90.2	-100.7	3938	3956	-22.9	-25.5	-2073.7	-2257.2	518.8	-465.2	47.3
3RD	42.50	-50.1	-63.7	2145	2329	-23.4	-27.3	-1983.5	-2156.5	469.1	-419.5	43.6
4TH	55.50	-44.7	-57.5	2145	2232	-20.8	-25.8	-1933.4	-2092.8	441.5	-394.1	42.1
5TH	68.50	-41.0	-52.1	2427	2123	-16.9	-24.5	-1888.7	-2035.3	414.7	-369.2	40.7
6TH	81.50	-56.8	-53.5	2427	2123	-23.4	-25.2	-1847.7	-1983.2	388.6	-345.0	39.4
7TH	94.50	-50.5	-64.4	2427	2448	-20.8	-26.3	-1790.9	-1929.7	363.1	-321.3	38.0
8TH	107.50	-59.4	-64.3	2427	2448	-24.5	-26.3	-1740.4	-1865.3	338.5	-298.4	36.3
9TH	120.50	-60.7	-64.5	2427	2448	-25.0	-26.3	-1681.0	-1801.0	314.6	-276.1	34.8
10TH	133.50	-61.9	-64.6	2427	2448	-25.5	-26.4	-1620.3	-1736.5	291.6	-254.7	33.4
11TH	146.50	-64.9	-64.8	2427	2448	-26.7	-26.5	-1558.4	-1672.0	269.5	-234.0	31.9
12TH	159.50	-66.5	-65.3	2427	2448	-27.4	-26.7	-1493.6	-1607.1	248.2	-214.2	30.6
13TH	172.50	-67.9	-65.7	2427	2448	-28.0	-26.8	-1427.1	-1541.9	227.7	-195.2	29.3
14TH	185.50	-69.3	-66.1	2427	2448	-28.5	-27.0	-1359.2	-1476.2	208.1	-177.1	28.1
15TH	198.50	-70.6	-66.5	2427	2448	-29.1	-27.2	-1290.0	-1410.1	189.3	-159.8	26.8
16TH	211.50	-70.6	-67.0	2427	2448	-29.1	-27.4	-1219.3	-1343.6	171.4	-143.5	25.6
17TH	224.50	-70.5	-67.4	2427	2448	-29.0	-27.5	-1148.8	-1276.6	154.4	-128.1	24.4
18TH	237.50	-70.4	-67.8	2427	2448	-29.0	-27.7	-1078.3	-1209.2	138.2	-113.7	23.2
19TH	250.50	-70.3	-68.2	2427	2448	-29.0	-27.8	-1007.9	-1141.5	122.9	-100.1	22.0
20TH	263.50	-70.2	-68.6	2427	2448	-28.9	-28.0	-937.7	-1073.3	108.6	-87.5	20.8
21ST	276.50	-70.1	-69.0	2427	2448	-28.9	-28.2	-867.5	-1004.7	95.0	-75.7	19.7
22ND	289.50	-70.0	-69.4	2427	2448	-28.8	-28.3	-797.4	-935.7	82.4	-64.9	18.6
23RD	302.50	-69.7	-69.8	2427	2448	-28.7	-28.5	-727.5	-866.3	70.7	-55.0	17.5
24TH	315.50	-68.3	-70.2	2427	2448	-28.2	-28.7	-657.7	-796.5	59.9	-46.0	16.4
25TH	328.50	-67.0	-70.5	2427	2448	-27.6	-28.8	-589.4	-726.3	50.0	-37.9	15.3
26TH	341.50	-65.7	-70.8	2427	2448	-27.1	-28.9	-522.4	-655.9	41.0	-30.7	14.2
27TH	354.50	-64.4	-71.1	2427	2448	-26.5	-29.0	-456.7	-585.1	33.0	-24.3	13.2
28TH	367.50	-63.1	-71.4	2427	2448	-26.0	-29.2	-392.3	-514.0	25.8	-18.8	12.1
29TH	380.50	-59.4	-69.4	2427	2448	-24.5	-28.3	-329.2	-442.6	19.6	-14.1	11.1
30TH	393.50	-62.9	-68.7	2473	2637	-25.4	-26.1	-269.9	-373.1	14.3	-10.2	10.1
31ST	407.50	-60.3	-89.8	3173	3202	-19.0	-28.0	-207.0	-304.4	9.6	-6.8	9.5
32ND	424.50	-43.9	-82.9	3173	3018	-13.8	-27.5	-146.6	-214.6	5.1	-3.8	8.3
33RD	441.50	-36.8	-58.7	2297	2308	-16.0	-25.4	-102.7	-131.7	2.2	-1.7	6.0
34TH	454.50	-50.8	-42.4	2297	1181	-22.1	-35.9	-65.9	-73.0	.9	-.6	3.6
35TH	467.50	-15.2	-30.6	433	704	-35.0	-43.5	-15.2	-30.6	.2	-.1	.8

TABLE 7. SHEAR AND MOMENT DIAGRAMS : BASS BROTHERS OFFICE BUILDING - PHASE I, FT. WORTH
WIND DIRECTION 20 CONFIGURATION A REFERENCE PRESSURE 26.0 PSF GUST FACTOR 1.32

FLOOR	HEIGHT FT	X-FORCE KIPS	Y-FORCE KIPS	X-AREA SQ FT	Y-AREA SQ FT	X-PRESS PSF	Y-PRESS PSF	X-SHEAR KIPS	Y-SHEAR KIPS	X-MOMENT 1000-FT-KIPS	Y-MOMENT 1000-FT-KIPS	Z-MOMENT 1000-FT-KIPS
GRND	0.00	-66.0	-46.0	2333	3000	-28.3	-15.3	-2197.1	-1686.5	417.7	-526.2	56.7
2ND	20.00	-81.7	-77.2	3938	3956	-20.8	-19.5	-2131.0	-1640.5	384.4	-482.9	56.0
3RD	42.50	-49.2	-46.5	2145	2329	-22.9	-20.0	-2049.3	-1563.3	348.4	-435.9	52.0
4TH	55.50	-44.4	-39.3	2145	2232	-20.7	-17.6	-2000.1	-1516.8	328.3	-409.5	50.3
5TH	68.50	-42.6	-35.1	2427	2123	-17.6	-16.5	-1955.7	-1477.5	308.9	-383.8	48.7
6TH	81.50	-57.6	-37.1	2427	2123	-23.7	-17.5	-1913.1	-1442.4	289.9	-358.7	47.4
7TH	94.50	-52.7	-48.4	2427	2448	-21.7	-19.8	-1855.5	-1405.3	271.4	-334.2	45.8
8TH	107.50	-61.6	-47.9	2427	2448	-25.4	-19.6	-1802.8	-1356.9	253.4	-310.4	44.2
9TH	120.50	-61.9	-47.2	2427	2448	-25.5	-19.3	-1741.2	-1309.0	236.1	-287.4	42.6
10TH	133.50	-62.2	-46.5	2427	2448	-25.6	-19.0	-1679.3	-1261.8	219.4	-265.1	40.9
11TH	146.50	-64.7	-45.9	2427	2448	-26.7	-18.8	-1617.1	-1215.4	203.3	-243.7	39.2
12TH	159.50	-66.2	-45.7	2427	2448	-27.3	-18.7	-1552.5	-1169.4	187.8	-223.1	37.6
13TH	172.50	-67.5	-45.5	2427	2448	-27.8	-18.6	-1486.2	-1123.7	172.9	-203.4	36.0
14TH	185.50	-68.9	-45.2	2427	2448	-28.4	-18.5	-1418.7	-1078.3	158.6	-184.5	34.4
15TH	198.50	-70.2	-45.0	2427	2448	-28.9	-18.4	-1349.8	-1033.1	144.8	-166.5	32.9
16TH	211.50	-70.9	-45.4	2427	2448	-29.2	-18.5	-1279.7	-988.1	131.7	-149.4	31.4
17TH	224.50	-71.7	-45.9	2427	2448	-29.5	-18.7	-1208.8	-942.7	119.2	-133.2	29.8
18TH	237.50	-72.4	-46.3	2427	2448	-29.8	-18.9	-1137.1	-896.8	107.2	-118.0	28.2
19TH	250.50	-73.2	-46.8	2427	2448	-30.2	-19.1	-1064.7	-850.5	95.8	-103.7	26.6
20TH	263.50	-74.0	-47.3	2427	2448	-30.5	-19.3	-991.5	-803.7	85.1	-90.3	24.9
21ST	276.50	-74.7	-47.7	2427	2448	-30.8	-19.5	-917.5	-756.4	74.9	-77.9	23.2
22ND	289.50	-75.5	-48.2	2427	2448	-31.1	-19.7	-842.8	-708.7	65.4	-66.4	21.5
23RD	302.50	-76.1	-48.7	2427	2448	-31.4	-19.9	-767.3	-660.5	56.5	-56.0	19.7
24TH	315.50	-74.5	-49.7	2427	2448	-30.7	-20.3	-691.2	-611.9	48.3	-46.5	17.9
25TH	328.50	-73.1	-50.7	2427	2448	-30.1	-20.7	-616.7	-562.2	40.6	-38.0	16.2
26TH	341.50	-71.6	-51.7	2427	2448	-29.5	-21.1	-543.6	-511.5	33.6	-30.5	14.7
27TH	354.50	-70.1	-52.7	2427	2448	-28.9	-21.5	-472.1	-459.8	27.3	-23.8	13.3
28TH	367.50	-68.6	-53.7	2427	2448	-28.3	-21.9	-402.0	-407.1	21.7	-18.2	12.0
29TH	380.50	-65.3	-52.3	2427	2448	-26.9	-21.4	-333.4	-353.3	16.8	-13.4	10.9
30TH	393.50	-68.6	-50.8	2473	2637	-27.7	-19.3	-268.2	-301.0	12.5	-9.5	9.9
31ST	407.50	-64.9	-65.5	3173	3202	-20.4	-20.4	-199.6	-250.3	8.6	-6.2	9.5
32ND	424.50	-45.7	-60.0	3173	3018	-14.4	-19.9	-134.7	-184.8	4.9	-3.4	8.3
33RD	441.50	-33.4	-45.2	2297	2308	-14.5	-19.6	-89.0	-124.8	2.3	-1.5	5.7
34TH	454.50	-43.6	-43.8	2297	1181	-19.0	-37.1	-55.7	-79.6	1.0	-.5	3.5
35TH	467.50	-12.1	-35.8	433	704	-27.9	-50.8	-12.1	-35.8	.2	-.1	.8

TABLE 7. SHEAR AND MOMENT DIAGRAMS : BASS BROTHERS OFFICE BUILDING - PHASE I, FT. WORTH

WIND DIRECTION 30 CONFIGURATION A REFERENCE PRESSURE 26.0 PSF GUST FACTOR 1.32

FLOOR	HEIGHT FT	X-FORCE KIPS	Y-FORCE KIPS	X-AREA SQ FT	Y-AREA SQ FT	X-PRESS PSF	Y-PRESS PSF	X-SHEAR KIPS	Y-SHEAR KIPS	X-MOMENT 1000-FT-KIPS	Y-MOMENT 1000-FT-KIPS	Z-MOMENT 1000-FT-KIPS
GRND	0.00	-63.5	-25.1	2333	3000	-27.2	-8.4	-2226.5	-856.1	225.7	-531.6	64.6
2ND	20.00	-77.4	-43.4	3938	3956	-19.7	-11.0	-2162.9	-831.0	208.9	-487.7	63.5
3RD	42.50	-46.9	-23.9	2145	2329	-21.9	-10.3	-2085.5	-787.5	190.7	-439.9	59.1
4TH	55.50	-41.6	-16.5	2145	2232	-19.4	-7.4	-2038.6	-763.7	180.6	-413.1	56.9
5TH	68.50	-41.3	-15.4	2427	2123	-17.0	-7.2	-1996.9	-747.2	170.8	-386.8	55.0
6TH	81.50	-59.0	-15.7	2427	2123	-24.3	-7.4	-1955.6	-731.8	161.2	-361.2	53.2
7TH	94.50	-54.3	-24.6	2427	2448	-22.4	-10.1	-1896.5	-716.1	151.7	-336.1	51.2
8TH	107.50	-63.2	-23.8	2427	2448	-26.1	-9.7	-1842.2	-691.5	142.6	-311.8	49.2
9TH	120.50	-63.6	-22.9	2427	2448	-26.2	-9.3	-1779.0	-667.7	133.8	-288.3	47.3
10TH	133.50	-64.0	-21.9	2427	2448	-26.4	-8.9	-1715.3	-644.8	125.2	-265.6	45.3
11TH	146.50	-66.7	-21.0	2427	2448	-27.5	-8.6	-1651.3	-622.9	117.0	-243.7	43.3
12TH	159.50	-68.5	-20.3	2427	2448	-28.2	-8.3	-1584.7	-601.9	109.0	-222.6	41.4
13TH	172.50	-70.1	-19.6	2427	2448	-28.9	-8.0	-1516.2	-581.6	101.3	-202.5	39.5
14TH	185.50	-71.7	-18.9	2427	2448	-29.5	-7.7	-1446.1	-562.0	93.9	-183.2	37.7
15TH	198.50	-73.3	-18.2	2427	2448	-30.2	-7.4	-1374.4	-543.1	86.7	-164.9	35.9
16TH	211.50	-74.0	-18.2	2427	2448	-30.5	-7.4	-1301.2	-524.9	79.8	-147.5	34.1
17TH	224.50	-74.7	-18.3	2427	2448	-30.8	-7.5	-1227.2	-506.7	73.1	-131.1	32.4
18TH	237.50	-75.4	-18.4	2427	2448	-31.1	-7.5	-1152.5	-488.4	66.6	-115.6	30.6
19TH	250.50	-76.1	-18.4	2427	2448	-31.4	-7.5	-1077.1	-470.1	60.4	-101.1	28.8
20TH	263.50	-76.9	-18.5	2427	2448	-31.7	-7.6	-1001.0	-451.6	54.4	-87.6	27.1
21ST	276.50	-77.6	-18.6	2427	2448	-32.0	-7.6	-924.1	-433.1	48.6	-75.1	25.3
22ND	289.50	-78.3	-18.7	2427	2448	-32.3	-7.6	-846.6	-414.5	43.1	-63.6	23.5
23RD	302.50	-78.9	-18.8	2427	2448	-32.5	-7.7	-768.3	-395.8	37.9	-53.1	21.7
24TH	315.50	-77.4	-21.6	2427	2448	-31.9	-8.8	-689.4	-377.0	32.8	-43.6	19.9
25TH	328.50	-76.1	-24.3	2427	2448	-31.4	-9.9	-611.9	-355.4	28.1	-35.2	18.3
26TH	341.50	-74.8	-27.1	2427	2448	-30.8	-11.1	-535.8	-331.1	23.6	-27.7	16.7
27TH	354.50	-73.4	-29.9	2427	2448	-30.3	-12.2	-461.1	-303.9	19.5	-21.2	15.3
28TH	367.50	-72.1	-32.7	2427	2448	-29.7	-13.4	-387.7	-274.0	15.7	-15.7	13.9
29TH	380.50	-69.3	-33.2	2427	2448	-28.6	-13.6	-315.6	-241.3	12.4	-11.1	12.7
30TH	393.50	-73.2	-32.6	2473	2637	-29.6	-12.4	-246.3	-208.1	9.5	-7.5	11.7
31ST	407.50	-69.6	-39.4	3173	3202	-21.9	-12.3	-173.1	-175.5	6.8	-4.5	11.2
32ND	424.50	-47.1	-33.1	3173	3018	-14.8	-11.0	-103.5	-136.1	4.1	-2.2	9.2
33RD	441.50	-24.8	-28.6	2297	2308	-10.8	-12.4	-56.4	-103.0	2.1	-.8	5.8
34TH	454.50	-27.3	-39.7	2297	1181	-11.9	-33.6	-31.6	-74.4	.9	-.3	3.3
35TH	467.50	-4.3	-34.7	433	704	-9.9	-49.2	-4.3	-34.7	.2	-.0	.7

TABLE 7. SHEAR AND MOMENT DIAGRAMS : BASS BROTHERS OFFICE BUILDING - PHASE I, FT. WORTH
WIND DIRECTION 40 CONFIGURATION A REFERENCE PRESSURE 26.0 PSF GUST FACTOR 1.32

FLOOR	HEIGHT FT	X-FORCE KIPS	Y-FORCE KIPS	X-AREA SQ FT	Y-AREA SQ FT	X-PRESS PSF	Y-PRESS PSF	X-SHEAR KIPS	Y-SHEAR KIPS	X-MOMENT 1000-FT-KIPS	Y-MOMENT 1000-FT-KIPS	Z-MOMENT 1000-FT-KIPS
GRND	0.00	-72.8	-11.0	2333	3000	-31.2	-3.7	-2240.4	-182.2	60.4	-532.8	63.5
2ND	20.00	-74.0	-17.6	3938	3956	-18.8	-4.4	-2167.6	-171.2	56.9	-488.7	61.8
3RD	42.50	-49.7	-9.8	2145	2329	-23.2	-4.2	-2093.7	-153.6	53.2	-440.8	56.3
4TH	55.50	-42.5	-.9	2145	2232	-19.8	-.4	-2044.0	-143.8	51.3	-413.9	53.7
5TH	68.50	-39.3	.8	2427	2123	-16.2	.4	-2001.4	-142.9	49.4	-387.6	51.6
6TH	81.50	-60.1	2.2	2427	2123	-24.8	1.0	-1962.1	-143.7	47.6	-361.8	50.0
7TH	94.50	-56.9	-5.4	2427	2448	-23.4	-2.2	-1902.0	-145.8	45.7	-336.7	48.2
8TH	107.50	-67.9	-4.8	2427	2448	-28.0	-2.0	-1845.1	-140.4	43.8	-312.3	46.3
9TH	120.50	-66.3	-3.9	2427	2448	-27.3	-1.6	-1777.2	-135.6	42.0	-288.8	44.6
10TH	133.50	-64.7	-2.9	2427	2448	-26.7	-1.2	-1710.9	-131.8	40.3	-266.1	42.7
11TH	146.50	-66.2	-2.1	2427	2448	-27.3	-.8	-1646.2	-128.9	38.6	-244.3	40.9
12TH	159.50	-67.5	-.9	2427	2448	-27.8	-.4	-1580.1	-126.8	36.9	-223.3	39.1
13TH	172.50	-68.7	.2	2427	2448	-28.3	.1	-1512.5	-125.9	35.3	-203.2	37.4
14TH	185.50	-69.8	1.3	2427	2448	-28.8	.5	-1443.8	-126.1	33.7	-184.0	35.9
15TH	198.50	-71.0	2.4	2427	2448	-29.2	1.0	-1374.0	-127.4	32.0	-165.7	34.4
16TH	211.50	-71.9	2.5	2427	2448	-29.6	1.0	-1303.1	-129.9	30.3	-148.3	33.1
17TH	224.50	-73.0	2.5	2427	2448	-30.1	1.0	-1231.1	-132.4	28.6	-131.8	31.8
18TH	237.50	-74.1	2.6	2427	2448	-30.5	1.0	-1158.1	-135.0	26.9	-116.3	30.4
19TH	250.50	-75.2	2.6	2427	2448	-31.0	1.0	-1084.0	-137.5	25.1	-101.7	29.0
20TH	263.50	-76.3	2.6	2427	2448	-31.4	1.1	-1008.9	-140.1	23.3	-88.1	27.5
21ST	276.50	-77.3	2.6	2427	2448	-31.9	1.1	-932.6	-142.7	21.5	-75.5	26.0
22ND	289.50	-78.4	2.6	2427	2448	-32.3	1.1	-855.3	-145.2	19.6	-63.9	24.5
23RD	302.50	-79.4	2.5	2427	2448	-32.7	1.0	-776.8	-147.8	17.7	-53.3	22.9
24TH	315.50	-78.2	-.9	2427	2448	-32.2	-.4	-697.5	-150.3	15.8	-43.7	21.3
25TH	328.50	-77.0	-4.4	2427	2448	-31.7	-1.8	-619.3	-149.4	13.8	-35.1	19.7
26TH	341.50	-75.8	-7.9	2427	2448	-31.2	-3.2	-542.3	-144.9	11.9	-27.6	18.3
27TH	354.50	-74.7	-11.4	2427	2448	-30.8	-4.7	-466.5	-137.0	10.1	-21.0	16.9
28TH	367.50	-73.5	-14.9	2427	2448	-30.3	-6.1	-391.8	-125.6	8.4	-15.4	15.6
29TH	380.50	-71.5	-14.1	2427	2448	-29.5	-5.8	-318.3	-110.6	6.8	-10.8	14.4
30TH	393.50	-75.6	-7.2	2473	2637	-30.6	-2.7	-246.8	-96.5	5.5	-7.1	13.5
31ST	407.50	-73.0	-12.3	3173	3202	-23.0	-3.8	-171.2	-89.3	4.2	-4.2	13.2
32ND	424.50	-50.2	-8.0	3173	3018	-15.8	-2.7	-98.2	-77.0	2.8	-1.9	10.8
33RD	441.50	-23.1	-12.8	2297	2308	-10.1	-5.6	-48.0	-69.0	1.5	-.7	6.4
34TH	454.50	-21.6	-29.4	2297	1181	-9.4	-24.9	-24.8	-56.1	.7	-.2	3.3
35TH	467.50	-3.3	-26.7	433	704	-7.5	-38.0	-3.3	-26.7	.2	-.0	.7

TABLE 7. SHEAR AND MOMENT DIAGRAMS : BASS BROTHERS OFFICE BUILDING - PHASE I, FT. WORTH

WIND DIRECTION 50 CONFIGURATION A REFERENCE PRESSURE 26.0 PSF GUST FACTOR 1.32

FLOOR	HEIGHT FT	X-FORCE KIPS	Y-FORCE KIPS	X-AREA SQ FT	Y-AREA SQ FT	X-PRESS PSF	Y-PRESS PSF	X-SHEAR KIPS	Y-SHEAR KIPS	X-MOMENT 1000-FT-KIPS	Y-MOMENT 1000-FT-KIPS	Z-MOMENT 1000-FT-KIPS
GRND	0.00	-69.2	-5.8	2333	3000	-29.7	-1.9	-2022.3	-78.2	28.1	-466.7	44.5
2ND	20.00	-68.3	-9.5	3938	3956	-17.4	-2.4	-1953.1	-72.5	26.5	-426.9	42.8
3RD	42.50	-48.1	-.6	2145	2329	-22.4	-.3	-1884.8	-63.0	25.0	-383.7	37.4
4TH	55.50	-42.0	5.1	2145	2232	-19.6	2.3	-1836.7	-62.4	24.2	-359.5	35.1
5TH	68.50	-38.5	4.7	2427	2123	-15.8	2.2	-1794.7	-67.4	23.4	-335.9	33.4
6TH	81.50	-57.5	5.9	2427	2123	-23.7	2.8	-1756.2	-72.1	22.5	-312.9	32.4
7TH	94.50	-54.8	-1.7	2427	2448	-22.6	-.7	-1698.7	-78.0	21.5	-290.4	31.2
8TH	107.50	-65.2	-1.6	2427	2448	-26.9	-.7	-1643.9	-76.3	20.5	-268.7	29.9
9TH	120.50	-63.1	-1.3	2427	2448	-26.0	-.5	-1578.6	-74.7	19.5	-247.7	28.7
10TH	133.50	-61.0	-1.0	2427	2448	-25.1	-.4	-1515.5	-73.3	18.5	-227.6	27.3
11TH	146.50	-61.3	-.7	2427	2448	-25.3	-.3	-1454.6	-72.3	17.6	-208.3	25.9
12TH	159.50	-62.1	.0	2427	2448	-25.6	.0	-1393.2	-71.6	16.7	-189.8	24.5
13TH	172.50	-62.7	.7	2427	2448	-25.8	.3	-1331.1	-71.6	15.7	-172.1	23.2
14TH	185.50	-63.3	1.5	2427	2448	-26.1	.6	-1268.5	-72.3	14.8	-155.2	22.0
15TH	198.50	-63.9	2.2	2427	2448	-26.3	.9	-1205.2	-73.8	13.8	-139.1	20.9
16TH	211.50	-64.8	1.7	2427	2448	-26.7	.7	-1141.2	-76.0	12.9	-123.9	19.9
17TH	224.50	-65.9	1.1	2427	2448	-27.2	.5	-1076.4	-77.6	11.9	-109.4	18.9
18TH	237.50	-66.9	.6	2427	2448	-27.6	.2	-1010.5	-78.8	10.8	-95.9	17.9
19TH	250.50	-68.0	.1	2427	2448	-28.0	.0	-943.6	-79.4	9.8	-83.2	17.0
20TH	263.50	-69.0	-.5	2427	2448	-28.4	-.2	-875.6	-79.4	8.8	-71.4	16.0
21ST	276.50	-70.1	-1.0	2427	2448	-28.9	-.4	-806.6	-78.9	7.8	-60.4	15.0
22ND	289.50	-71.1	-1.6	2427	2448	-29.3	-.6	-736.5	-77.9	6.7	-50.4	14.0
23RD	302.50	-72.1	-2.2	2427	2448	-29.7	-.9	-665.3	-76.3	5.7	-41.3	13.0
24TH	315.50	-71.3	-4.5	2427	2448	-29.4	-1.8	-593.3	-74.2	4.8	-33.1	12.0
25TH	328.50	-70.7	-6.8	2427	2448	-29.1	-2.8	-521.9	-69.7	3.8	-25.8	11.1
26TH	341.50	-70.0	-9.2	2427	2448	-28.8	-3.7	-451.3	-62.8	3.0	-19.5	10.3
27TH	354.50	-69.3	-11.5	2427	2448	-28.6	-4.7	-381.3	-53.7	2.2	-14.1	9.6
28TH	367.50	-68.6	-13.8	2427	2448	-28.3	-5.7	-312.0	-42.2	1.6	-9.6	8.9
29TH	380.50	-67.5	-12.5	2427	2448	-27.8	-5.1	-243.3	-28.3	1.1	-6.0	8.3
30TH	393.50	-72.1	-5.9	2473	2637	-29.2	-2.2	-175.8	-15.9	.8	-3.3	8.1
31ST	407.50	-67.0	-5.0	3173	3202	-21.1	-1.5	-103.7	-10.0	.7	-1.3	8.6
32ND	424.50	-38.2	6.5	3173	3018	-12.0	2.1	-36.7	-5.0	.5	-.1	7.3
33RD	441.50	-7.4	5.0	2297	2308	-3.2	2.2	1.5	-11.5	.4	.2	4.2
34TH	454.50	4.8	-9.1	2297	1181	2.1	-7.7	8.9	-16.5	.2	.1	1.9
35TH	467.50	4.1	-7.4	433	704	9.6	-10.5	4.1	-7.4	.0	.0	.4

TABLE 7. SHEAR AND MOMENT DIAGRAMS : BASS BROTHERS OFFICE BUILDING - PHASE I, FT. WORTH
WIND DIRECTION 60 CONFIGURATION A REFERENCE PRESSURE 26.0 PSF GUST FACTOR 1.32

FLOOR	HEIGHT FT	X-FORCE KIPS	Y-FORCE KIPS	X-AREA SQ FT	Y-AREA SQ FT	X-PRESS PSF	Y-PRESS PSF	X-SHEAR KIPS	Y-SHEAR KIPS	X-MOMENT 1000-FT-KIPS	Y-MOMENT 1000-FT-KIPS	Z-MOMENT 1000-FT-KIPS
GRND	0.00	-67.3	-11.5	2333	3000	-28.8	-3.8	-1923.6	-501.9	139.5	-441.7	22.1
2ND	20.00	-63.6	-21.5	3938	3956	-16.1	-5.4	-1856.3	-490.4	129.6	-403.9	20.6
3RD	42.50	-46.6	-6.4	2145	2329	-21.7	-2.7	-1792.8	-468.9	118.8	-362.8	15.3
4TH	55.50	-41.2	-1.5	2145	2232	-19.2	-.7	-1746.1	-462.5	112.8	-339.8	13.3
5TH	68.50	-36.4	-1.0	2427	2123	-15.0	-.5	-1705.0	-461.0	106.8	-317.4	12.0
6TH	81.50	-55.7	-1.9	2427	2123	-22.9	-.9	-1668.6	-460.0	100.8	-295.5	11.7
7TH	94.50	-52.1	-12.0	2427	2448	-21.5	-4.9	-1612.9	-458.2	94.8	-274.1	11.1
8TH	107.50	-61.5	-12.3	2427	2448	-25.4	-5.0	-1560.8	-446.1	88.9	-253.5	10.5
9TH	120.50	-59.4	-12.4	2427	2448	-24.5	-5.1	-1499.2	-433.8	83.2	-233.6	10.0
10TH	133.50	-57.2	-12.6	2427	2448	-23.6	-5.1	-1439.9	-421.4	77.6	-214.5	9.3
11TH	146.50	-57.6	-12.5	2427	2448	-23.7	-5.1	-1382.7	-408.9	72.2	-196.2	8.6
12TH	159.50	-58.6	-12.1	2427	2448	-24.2	-4.9	-1325.0	-396.4	67.0	-178.6	7.9
13TH	172.50	-59.6	-11.7	2427	2448	-24.5	-4.8	-1266.4	-384.3	61.9	-161.7	7.3
14TH	185.50	-60.5	-11.3	2427	2448	-24.9	-4.6	-1206.8	-372.6	57.0	-145.6	6.9
15TH	198.50	-61.4	-10.9	2427	2448	-25.3	-4.5	-1146.4	-361.3	52.2	-130.3	6.5
16TH	211.50	-62.2	-11.5	2427	2448	-25.6	-4.7	-1085.0	-350.4	47.6	-115.8	6.2
17TH	224.50	-63.1	-12.1	2427	2448	-26.0	-5.0	-1022.8	-338.9	43.1	-102.1	5.9
18TH	237.50	-64.0	-12.8	2427	2448	-26.4	-5.2	-959.6	-326.8	38.8	-89.3	5.6
19TH	250.50	-64.9	-13.5	2427	2448	-26.8	-5.5	-895.6	-314.0	34.7	-77.2	5.3
20TH	263.50	-65.8	-14.1	2427	2448	-27.1	-5.8	-830.7	-300.5	30.7	-66.0	5.1
21ST	276.50	-66.7	-14.8	2427	2448	-27.5	-6.0	-764.9	-286.4	26.8	-55.6	4.7
22ND	289.50	-67.7	-15.5	2427	2448	-27.9	-6.3	-698.1	-271.6	23.2	-46.1	4.4
23RD	302.50	-68.5	-16.2	2427	2448	-28.2	-6.6	-630.4	-256.1	19.8	-37.5	4.1
24TH	315.50	-68.3	-18.8	2427	2448	-28.2	-7.7	-562.0	-239.9	16.6	-29.7	3.8
25TH	328.50	-68.2	-21.4	2427	2448	-28.1	-8.7	-493.7	-221.1	13.6	-22.8	3.6
26TH	341.50	-68.1	-24.0	2427	2448	-28.0	-9.8	-425.5	-199.7	10.8	-16.9	3.5
27TH	354.50	-67.9	-26.6	2427	2448	-28.0	-10.9	-357.4	-175.7	8.4	-11.8	3.5
28TH	367.50	-67.8	-29.2	2427	2448	-27.9	-11.9	-289.5	-149.0	6.3	-7.6	3.5
29TH	380.50	-67.6	-28.2	2427	2448	-27.9	-11.5	-221.7	-119.8	4.5	-4.3	3.7
30TH	393.50	-72.7	-23.5	2473	2637	-29.4	-8.9	-154.0	-91.6	3.2	-1.8	4.2
31ST	407.50	-68.5	-28.6	3173	3202	-21.6	-8.9	-81.4	-68.0	2.0	-.2	5.6
32ND	424.50	-35.5	-13.5	3173	3018	-11.2	-4.5	-12.8	-39.4	1.1	.6	5.3
33RD	441.50	-1.2	-4.9	2297	2308	-.5	-2.1	22.6	-25.9	.6	.6	3.0
34TH	454.50	16.4	-11.0	2297	1181	7.2	-9.3	23.8	-21.0	.3	.3	1.2
35TH	467.50	7.4	-10.0	433	704	17.0	-14.2	7.4	-10.0	.1	.0	.4

TABLE 7. SHEAR AND MOMENT DIAGRAMS : BASS BROTHERS OFFICE BUILDING - PHASE I, FT. WORTH
WIND DIRECTION 70 CONFIGURATION A REFERENCE PRESSURE 26.0 PSF GUST FACTOR 1.32

FLOOR	HEIGHT FT	X-FORCE KIPS	Y-FORCE KIPS	X-AREA SQ FT	Y-AREA SQ FT	X-PRESS PSF	Y-PRESS PSF	X-SHEAR KIPS	Y-SHEAR KIPS	X-MOMENT 1000-FT-KIPS	Y-MOMENT 1000-FT-KIPS	Z-MOMENT 1000-FT-KIPS
GRND	0.00	-64.1	-12.8	2333	3000	-27.5	-4.3	-1974.6	-680.8	192.4	-469.9	15.6
2ND	20.00	-56.9	-23.6	3938	3956	-14.5	-6.0	-1910.5	-667.9	178.9	-431.0	14.1
3RD	42.50	-43.2	-7.8	2145	2329	-20.1	-3.3	-1853.6	-644.4	164.1	-388.7	9.0
4TH	55.50	-39.9	-3.4	2145	2232	-18.6	-1.5	-1810.4	-636.6	155.8	-364.8	7.1
5TH	68.50	-36.5	-3.0	2427	2123	-15.1	-1.4	-1770.4	-633.2	147.6	-341.6	6.1
6TH	81.50	-53.7	-4.1	2427	2123	-22.1	-1.9	-1733.9	-630.2	139.4	-318.8	6.2
7TH	94.50	-49.8	-15.5	2427	2448	-20.5	-6.3	-1680.2	-626.1	131.2	-296.6	5.9
8TH	107.50	-58.4	-16.1	2427	2448	-24.1	-6.6	-1630.4	-610.6	123.2	-275.1	5.8
9TH	120.50	-56.7	-16.5	2427	2448	-23.4	-6.7	-1572.1	-594.5	115.3	-254.3	5.7
10TH	133.50	-55.0	-16.8	2427	2448	-22.7	-6.9	-1515.4	-578.0	107.7	-234.2	5.4
11TH	146.50	-55.7	-16.9	2427	2448	-22.9	-6.9	-1460.3	-561.2	100.3	-214.9	5.0
12TH	159.50	-57.2	-16.4	2427	2448	-23.6	-6.7	-1404.7	-544.3	93.1	-196.2	4.5
13TH	172.50	-58.6	-15.8	2427	2448	-24.2	-6.5	-1347.5	-528.0	86.1	-178.3	4.2
14TH	185.50	-60.1	-15.3	2427	2448	-24.8	-6.3	-1288.9	-512.1	79.4	-161.2	4.0
15TH	198.50	-61.5	-14.8	2427	2448	-25.3	-6.0	-1228.8	-496.8	72.8	-144.8	3.8
16TH	211.50	-62.9	-15.7	2427	2448	-25.9	-6.4	-1167.3	-482.1	66.5	-129.3	3.7
17TH	224.50	-64.3	-16.7	2427	2448	-26.5	-6.8	-1104.4	-466.3	60.3	-114.5	3.7
18TH	237.50	-65.8	-17.7	2427	2448	-27.1	-7.2	-1040.1	-449.6	54.3	-100.6	3.6
19TH	250.50	-67.3	-18.7	2427	2448	-27.7	-7.7	-974.3	-431.8	48.6	-87.5	3.4
20TH	263.50	-68.8	-19.7	2427	2448	-28.3	-8.1	-907.0	-413.1	43.1	-75.2	3.3
21ST	276.50	-70.2	-20.7	2427	2448	-28.9	-8.5	-838.2	-393.4	37.9	-63.9	3.1
22ND	289.50	-71.7	-21.7	2427	2448	-29.6	-8.9	-768.0	-372.6	32.9	-53.5	2.9
23RD	302.50	-73.1	-22.8	2427	2448	-30.1	-9.3	-696.2	-350.9	28.2	-43.9	2.7
24TH	315.50	-72.8	-25.4	2427	2448	-30.0	-10.4	-623.1	-328.1	23.8	-35.4	2.4
25TH	328.50	-72.5	-28.0	2427	2448	-29.9	-11.4	-550.3	-302.8	19.7	-27.7	2.3
26TH	341.50	-72.1	-30.6	2427	2448	-29.7	-12.5	-477.8	-274.8	15.9	-21.1	2.3
27TH	354.50	-71.8	-33.2	2427	2448	-29.6	-13.6	-405.7	-244.2	12.5	-15.3	2.4
28TH	367.50	-71.5	-35.8	2427	2448	-29.5	-14.6	-333.9	-211.0	9.6	-10.5	2.7
29TH	380.50	-70.9	-35.2	2427	2448	-29.2	-14.4	-262.4	-175.2	7.1	-6.6	3.1
30TH	393.50	-75.2	-32.2	2473	2637	-30.4	-12.2	-191.5	-139.9	5.0	-3.7	3.9
31ST	407.50	-73.8	-39.7	3173	3202	-23.3	-12.4	-116.3	-107.7	3.3	-1.5	5.3
32ND	424.50	-42.5	-25.2	3173	3018	-13.4	-8.3	-42.5	-68.0	1.8	-.2	5.4
33RD	441.50	-9.7	-12.8	2297	2308	-4.2	-5.6	-.0	-42.8	.9	.2	3.2
34TH	454.50	4.5	-15.3	2297	1181	2.0	-12.9	9.7	-30.0	.4	.1	1.1
35TH	467.50	5.2	-14.7	433	704	12.0	-20.9	5.2	-14.7	.1	.0	.5

TABLE 7. SHEAR AND MOMENT DIAGRAMS : BASS BROTHERS OFFICE BUILDING - PHASE I, FT. WORTH
WIND DIRECTION 80 CONFIGURATION A REFERENCE PRESSURE 26.0 PSF GUST FACTOR 1.32

FLOOR	HEIGHT FT	X-FORCE KIPS	Y-FORCE KIPS	X-AREA SQ FT	Y-AREA SQ FT	X-PRESS PSF	Y-PRESS PSF	X-SHEAR KIPS	Y-SHEAR KIPS	X-MOMENT 1000-FT-KIPS	Y-MOMENT 1000-FT-KIPS	Z-MOMENT 1000-FT-KIPS
GRND	0.00	-58.4	-5.3	2333	3000	-25.0	-1.8	-1979.5	-562.3	164.8	-491.6	18.9
2ND	20.00	-46.4	-15.7	3938	3956	-11.8	-4.0	-1921.1	-557.0	153.6	-452.6	17.5
3RD	42.50	-38.0	-4.9	2145	2329	-17.7	-2.1	-1874.7	-541.4	141.2	-409.9	12.5
4TH	55.50	-35.7	-1.4	2145	2232	-16.6	-.6	-1836.6	-536.5	134.2	-385.8	10.8
5TH	68.50	-32.3	-1.8	2427	2123	-13.3	-.8	-1801.0	-535.0	127.2	-362.2	10.0
6TH	81.50	-51.2	-2.6	2427	2123	-21.1	-1.2	-1768.7	-533.2	120.3	-339.0	10.4
7TH	94.50	-50.1	-14.5	2427	2448	-20.6	-5.9	-1717.5	-530.7	113.4	-316.3	10.4
8TH	107.50	-56.5	-14.3	2427	2448	-23.3	-5.8	-1667.4	-516.2	106.6	-294.3	10.5
9TH	120.50	-55.5	-13.4	2427	2448	-22.9	-5.5	-1611.0	-502.0	100.0	-273.0	10.6
10TH	133.50	-54.6	-12.5	2427	2448	-22.5	-5.1	-1555.4	-488.6	93.5	-252.4	10.5
11TH	146.50	-55.4	-11.9	2427	2448	-22.8	-4.9	-1500.8	-476.0	87.2	-232.5	10.3
12TH	159.50	-56.7	-11.6	2427	2448	-23.3	-4.7	-1445.4	-464.1	81.1	-213.4	10.1
13TH	172.50	-57.8	-11.3	2427	2448	-23.8	-4.6	-1388.7	-452.5	75.2	-195.0	9.8
14TH	185.50	-58.9	-11.0	2427	2448	-24.3	-4.5	-1330.9	-441.2	69.4	-177.3	9.4
15TH	198.50	-60.1	-10.7	2427	2448	-24.8	-4.4	-1272.0	-430.2	63.7	-160.4	9.1
16TH	211.50	-61.3	-11.8	2427	2448	-25.2	-4.8	-1211.9	-419.4	58.2	-144.2	8.7
17TH	224.50	-62.5	-12.9	2427	2448	-25.8	-5.3	-1150.6	-407.6	52.8	-128.9	8.3
18TH	237.50	-63.8	-14.0	2427	2448	-26.3	-5.7	-1088.1	-394.7	47.6	-114.3	7.9
19TH	250.50	-65.1	-15.1	2427	2448	-26.8	-6.2	-1024.3	-380.7	42.5	-100.6	7.5
20TH	263.50	-66.3	-16.2	2427	2448	-27.3	-6.6	-959.2	-365.6	37.7	-87.7	7.0
21ST	276.50	-67.6	-17.3	2427	2448	-27.9	-7.1	-892.9	-349.4	33.0	-75.6	6.6
22ND	289.50	-68.9	-18.4	2427	2448	-28.4	-7.5	-825.3	-332.1	28.6	-64.5	6.1
23RD	302.50	-70.1	-19.6	2427	2448	-28.9	-8.0	-756.4	-313.7	24.4	-54.2	5.6
24TH	315.50	-70.2	-22.8	2427	2448	-28.9	-9.3	-686.3	-294.2	20.5	-44.8	5.1
25TH	328.50	-70.3	-26.0	2427	2448	-29.0	-10.6	-616.1	-271.4	16.8	-36.4	4.7
26TH	341.50	-70.4	-29.2	2427	2448	-29.0	-11.9	-545.8	-245.4	13.4	-28.8	4.4
27TH	354.50	-70.6	-32.5	2427	2448	-29.1	-13.3	-475.3	-216.1	10.4	-22.2	4.2
28TH	367.50	-70.7	-35.7	2427	2448	-29.1	-14.6	-404.8	-183.7	7.8	-16.4	4.1
29TH	380.50	-69.7	-34.5	2427	2448	-28.7	-14.1	-334.1	-148.0	5.7	-11.6	4.1
30TH	393.50	-74.8	-28.8	2473	2637	-30.3	-10.9	-264.4	-113.5	4.0	-7.7	4.3
31ST	407.50	-79.5	-33.7	3173	3202	-25.1	-10.5	-189.6	-84.7	2.6	-4.6	5.4
32ND	424.50	-59.2	-18.3	3173	3018	-18.6	-6.1	-110.1	-51.1	1.4	-2.0	5.0
33RD	441.50	-28.6	-6.9	2297	2308	-12.5	-3.0	-50.9	-32.7	.7	-.7	2.9
34TH	454.50	-19.6	-12.2	2297	1181	-8.5	-10.3	-22.3	-25.8	.3	-.2	.9
35TH	467.50	-2.6	-13.6	433	704	-6.1	-19.3	-2.7	-13.6	.1	-.0	.5

TABLE 7. SHEAR AND MOMENT DIAGRAMS : BASS BROTHERS OFFICE BUILDING - PHASE I, FT. WORTH
WIND DIRECTION 90 CONFIGURATION A REFERENCE PRESSURE 26.0 PSF GUST FACTOR 1.32

FLOOR	HEIGHT FT	X-FORCE KIPS	Y-FORCE KIPS	X-AREA SQ FT	Y-AREA SQ FT	X-PRESS PSF	Y-PRESS PSF	X-SHEAR KIPS	Y-SHEAR KIPS	X-MOMENT 1000-FT-KIPS	Y-MOMENT 1000-FT-KIPS	Z-MOMENT 1000-FT-KIPS
GRND	0.00	-30.5	-.8	2333	3000	-13.1	-.3	-848.9	-266.8	76.2	-177.1	38.1
2ND	20.00	-20.6	-9.9	3938	3956	-5.2	-2.5	-818.4	-266.0	70.8	-160.5	37.1
3RD	42.50	-19.2	-.2	2145	2329	-8.9	-.1	-797.8	-256.1	65.0	-142.3	33.1
4TH	55.50	-15.9	4.0	2145	2232	-7.4	1.8	-778.6	-256.0	61.6	-132.0	31.3
5TH	68.50	-13.5	4.2	2427	2123	-5.6	2.0	-762.7	-260.0	58.3	-122.0	29.9
6TH	81.50	-36.6	3.4	2427	2123	-15.1	1.6	-749.2	-264.1	54.9	-112.2	29.3
7TH	94.50	-34.3	-5.9	2427	2448	-14.1	-2.4	-712.6	-267.6	51.4	-102.7	28.6
8TH	107.50	-41.0	-6.4	2427	2448	-16.9	-2.6	-678.3	-261.7	48.0	-93.6	27.7
9TH	120.50	-39.9	-6.6	2427	2448	-16.4	-2.7	-637.3	-255.3	44.6	-85.1	26.9
10TH	133.50	-38.7	-6.7	2427	2448	-16.0	-2.7	-597.5	-248.7	41.3	-77.1	26.1
11TH	146.50	-38.7	-7.0	2427	2448	-16.0	-2.8	-558.8	-242.0	38.1	-69.6	25.3
12TH	159.50	-37.4	-7.6	2427	2448	-15.4	-3.1	-520.0	-235.0	35.0	-62.5	24.7
13TH	172.50	-35.9	-8.2	2427	2448	-14.8	-3.4	-482.6	-227.4	32.0	-56.0	24.0
14TH	185.50	-34.5	-8.9	2427	2448	-14.2	-3.6	-446.7	-219.2	29.1	-50.0	23.2
15TH	198.50	-33.0	-9.5	2427	2448	-13.6	-3.9	-412.2	-210.3	26.3	-44.4	22.3
16TH	211.50	-31.3	-9.8	2427	2448	-12.9	-4.0	-379.3	-200.8	23.7	-39.3	21.4
17TH	224.50	-29.7	-10.1	2427	2448	-12.2	-4.1	-347.9	-191.1	21.1	-34.5	20.5
18TH	237.50	-28.1	-10.4	2427	2448	-11.6	-4.2	-318.2	-181.0	18.7	-30.2	19.5
19TH	250.50	-26.5	-10.7	2427	2448	-10.9	-4.4	-290.1	-170.6	16.4	-26.2	18.5
20TH	263.50	-24.9	-11.0	2427	2448	-10.3	-4.5	-263.6	-159.9	14.3	-22.6	17.5
21ST	276.50	-23.3	-11.3	2427	2448	-9.6	-4.6	-238.7	-148.9	12.3	-19.4	16.4
22ND	289.50	-21.7	-11.7	2427	2448	-8.9	-4.8	-215.4	-137.5	10.4	-16.4	15.3
23RD	302.50	-20.1	-12.0	2427	2448	-8.3	-4.9	-193.7	-125.9	8.7	-13.8	14.1
24TH	315.50	-19.5	-12.6	2427	2448	-8.0	-5.1	-173.6	-113.8	7.1	-11.4	13.0
25TH	328.50	-18.9	-13.1	2427	2448	-7.8	-5.4	-154.1	-101.3	5.7	-9.3	11.8
26TH	341.50	-18.4	-13.6	2427	2448	-7.6	-5.6	-135.1	-88.2	4.5	-7.4	10.6
27TH	354.50	-17.8	-14.2	2427	2448	-7.3	-5.8	-116.7	-74.5	3.4	-5.7	9.4
28TH	367.50	-17.2	-14.7	2427	2448	-7.1	-6.0	-98.9	-60.3	2.6	-4.3	8.3
29TH	380.50	-16.1	-12.5	2427	2448	-6.6	-5.1	-81.7	-45.6	1.9	-3.2	7.1
30TH	393.50	-16.6	-6.4	2473	2637	-6.7	-2.4	-65.7	-33.1	1.4	-2.2	5.9
31ST	407.50	-17.6	-8.2	3173	3202	-5.6	-2.6	-49.1	-26.7	1.0	-1.4	5.0
32ND	424.50	-13.5	-5.4	3173	3018	-4.3	-1.8	-31.5	-18.6	.6	-.7	3.5
33RD	441.50	-7.3	-1.9	2297	2308	-3.2	-.8	-18.0	-13.1	.3	-.3	1.9
34TH	454.50	-8.1	-5.9	2297	1181	-3.5	-5.0	-10.7	-11.2	.1	-.1	.9
35TH	467.50	-2.6	-5.3	433	704	-6.0	-7.5	-2.6	-5.3	.0	-.0	.3

TABLE 7. SHEAR AND MOMENT DIAGRAMS : BASS BROTHERS OFFICE BUILDING - PHASE I, FT. WORTH
WIND DIRECTION 100 CONFIGURATION A REFERENCE PRESSURE 26.0 PSF GUST FACTOR 1.32

FLOOR	HEIGHT FT	X-FORCE KIPS	Y-FORCE KIPS	X-AREA SQ FT	Y-AREA SQ FT	X-PRESS PSF	Y-PRESS PSF	X-SHEAR KIPS	Y-SHEAR KIPS	X-MOMENT 1000-FT-KIPS	Y-MOMENT 1000-FT-KIPS	Z-MOMENT 1000-FT-KIPS
GRND	0.00	-6.7	8.5	2333	3000	-2.9	2.8	-84.7	-48.1	54.6	-4.1	27.5
2ND	20.00	-.1	11.5	3938	3956	-.0	2.9	-78.0	-56.6	53.6	-2.5	26.9
3RD	42.50	-2.2	10.1	2145	2329	-1.0	4.3	-77.9	-68.2	52.2	-.7	24.5
4TH	55.50	2.5	16.5	2145	2232	1.1	7.4	-75.7	-78.3	51.2	.3	23.2
5TH	68.50	6.3	16.9	2427	2123	2.6	8.0	-78.2	-94.7	50.1	1.3	21.8
6TH	81.50	-10.3	15.9	2427	2123	-4.3	7.5	-84.5	-111.7	48.8	2.3	20.7
7TH	94.50	-11.3	11.9	2427	2448	-4.7	4.9	-74.2	-127.6	47.2	3.4	19.5
8TH	107.50	-19.3	11.2	2427	2448	-7.9	4.6	-62.9	-139.5	45.5	4.3	17.8
9TH	120.50	-17.8	10.5	2427	2448	-7.3	4.3	-43.6	-150.7	43.6	5.0	16.5
10TH	133.50	-16.3	9.7	2427	2448	-6.7	4.0	-25.8	-161.2	41.6	5.4	15.3
11TH	146.50	-15.1	8.4	2427	2448	-6.2	3.4	-9.6	-170.8	39.4	5.6	14.4
12TH	159.50	-12.7	6.2	2427	2448	-5.2	2.5	5.5	-179.2	37.1	5.7	13.6
13TH	172.50	-10.2	4.1	2427	2448	-4.2	1.7	18.2	-185.4	34.8	5.5	12.8
14TH	185.50	-7.7	2.0	2427	2448	-3.2	.8	28.4	-189.5	32.3	5.2	12.2
15TH	198.50	-5.2	-.2	2427	2448	-2.1	-.1	36.0	-191.5	29.9	4.8	11.6
16TH	211.50	-3.7	-1.6	2427	2448	-1.5	-.6	41.2	-191.3	27.4	4.3	11.0
17TH	224.50	-2.2	-3.0	2427	2448	-.9	-1.2	44.9	-189.7	24.9	3.7	10.5
18TH	237.50	-.7	-4.5	2427	2448	-.3	-1.8	47.1	-186.7	22.4	3.1	9.9
19TH	250.50	.8	-5.9	2427	2448	.3	-2.4	47.8	-182.3	20.0	2.5	9.4
20TH	263.50	2.2	-7.4	2427	2448	.9	-3.0	47.0	-176.3	17.7	1.9	8.9
21ST	276.50	3.7	-8.8	2427	2448	1.5	-3.6	44.8	-169.0	15.5	1.3	8.3
22ND	289.50	5.2	-10.2	2427	2448	2.1	-4.2	41.1	-160.2	13.3	.7	7.8
23RD	302.50	6.6	-11.7	2427	2448	2.7	-4.8	35.9	-149.8	11.3	.2	7.3
24TH	315.50	6.4	-12.7	2427	2448	2.6	-5.2	29.2	-138.2	9.4	-.2	6.8
25TH	328.50	6.2	-13.7	2427	2448	2.5	-5.6	22.8	-125.5	7.7	-.5	6.3
26TH	341.50	5.9	-14.7	2427	2448	2.4	-6.0	16.6	-111.8	6.2	-.8	5.8
27TH	354.50	5.7	-15.7	2427	2448	2.3	-6.4	10.7	-97.1	4.8	-1.0	5.3
28TH	367.50	5.4	-16.7	2427	2448	2.2	-6.8	5.0	-81.4	3.7	-1.1	4.8
29TH	380.50	5.4	-14.5	2427	2448	2.2	-5.9	-.4	-64.8	2.7	-1.1	4.3
30TH	393.50	5.7	-8.1	2473	2637	2.3	-3.1	-5.8	-50.3	2.0	-1.1	3.9
31ST	407.50	5.5	-12.4	3173	3202	1.7	-3.9	-11.5	-42.1	1.3	-.9	3.6
32ND	424.50	1.9	-12.0	3173	3018	.6	-4.0	-17.0	-29.8	.7	-.7	2.8
33RD	441.50	-3.5	-7.8	2297	2308	-1.5	-3.4	-18.9	-17.8	.3	-.4	1.9
34TH	454.50	-11.0	-5.5	2297	1181	-4.8	-4.7	-15.4	-10.0	.1	-.2	1.1
35TH	467.50	-4.4	-4.4	433	704	-10.2	-6.3	-4.4	-4.4	.0	-.0	.3

TABLE 7. SHEAR AND MOMENT DIAGRAMS : BASS BROTHERS OFFICE BUILDING - PHASE I, FT. WORTH
WIND DIRECTION 110 CONFIGURATION A REFERENCE PRESSURE 26.0 PSF GUST FACTOR 1.32

FLOOR	HEIGHT FT	X-FORCE KIPS	Y-FORCE KIPS	X-AREA SQ FT	Y-AREA SQ FT	X-PRESS PSF	Y-PRESS PSF	X-SHEAR KIPS	Y-SHEAR KIPS	X-MOMENT 1000-FT-KIPS	Y-MOMENT 1000-FT-KIPS	Z-MOMENT 1000-FT-KIPS
GRND	0.00	-10.7	16.9	2333	3000	-4.6	5.6	-104.6	435.2	-58.1	-36.3	11.5
2ND	20.00	-3.4	18.0	3938	3956	-.9	4.6	-93.9	418.3	-49.6	-34.4	11.7
3RD	42.50	-.4	19.7	2145	2329	-.2	8.5	-90.5	400.3	-40.4	-32.3	10.4
4TH	55.50	5.2	26.7	2145	2232	2.4	12.0	-90.1	380.6	-35.3	-31.1	9.5
5TH	68.50	12.4	26.2	2427	2123	5.1	12.3	-95.3	353.8	-30.5	-29.9	8.3
6TH	81.50	2.7	24.6	2427	2123	1.1	11.6	-107.7	327.6	-26.1	-28.6	7.2
7TH	94.50	13.6	29.1	2427	2448	5.6	11.9	-110.3	303.0	-22.0	-27.2	5.8
8TH	107.50	-1.3	29.4	2427	2448	-.5	12.0	-123.9	274.0	-18.3	-25.6	3.3
9TH	120.50	-2.9	28.9	2427	2448	-1.2	11.8	-122.7	244.6	-14.9	-24.0	1.8
10TH	133.50	-4.5	28.4	2427	2448	-1.9	11.6	-119.8	215.7	-11.9	-22.5	.6
11TH	146.50	-6.1	27.3	2427	2448	-2.5	11.1	-115.2	187.4	-9.3	-20.9	-.3
12TH	159.50	-5.9	25.2	2427	2448	-2.4	10.3	-109.1	160.1	-7.0	-19.5	-.8
13TH	172.50	-5.8	23.1	2427	2448	-2.4	9.4	-103.2	135.0	-5.1	-18.1	-1.2
14TH	185.50	-5.6	21.0	2427	2448	-2.3	8.6	-97.4	111.9	-3.5	-16.8	-1.3
15TH	198.50	-5.5	18.9	2427	2448	-2.2	7.7	-91.8	91.0	-2.2	-15.6	-1.3
16TH	211.50	-4.9	16.8	2427	2448	-2.0	6.9	-86.4	72.1	-1.1	-14.4	-1.1
17TH	224.50	-4.4	14.9	2427	2448	-1.8	6.1	-81.4	55.3	-.3	-13.3	-.9
18TH	237.50	-3.9	12.9	2427	2448	-1.6	5.3	-77.0	40.4	.3	-12.3	-.7
19TH	250.50	-3.3	10.9	2427	2448	-1.4	4.4	-73.2	27.5	.8	-11.3	-.5
20TH	263.50	-2.8	8.9	2427	2448	-1.2	3.6	-69.9	16.6	1.1	-10.4	-.3
21ST	276.50	-2.3	6.9	2427	2448	-.9	2.8	-67.1	7.7	1.2	-9.5	-.1
22ND	289.50	-1.7	4.9	2427	2448	-.7	2.0	-64.8	.8	1.3	-8.6	-.0
23RD	302.50	-1.2	3.0	2427	2448	-.5	1.2	-63.1	-4.1	1.2	-7.8	.1
24TH	315.50	-1.6	1.9	2427	2448	-.6	.8	-61.9	-7.1	1.2	-7.0	.2
25TH	328.50	-1.9	.9	2427	2448	-.8	.4	-60.3	-9.0	1.1	-6.2	.3
26TH	341.50	-2.3	-.1	2427	2448	-1.0	-.0	-58.4	-10.0	.9	-5.4	.4
27TH	354.50	-2.7	-1.1	2427	2448	-1.1	-.4	-56.1	-9.9	.8	-4.7	.6
28TH	367.50	-3.1	-2.1	2427	2448	-1.3	-.8	-53.4	-8.8	.7	-4.0	.7
29TH	380.50	-2.6	-.6	2427	2448	-1.1	-.2	-50.3	-6.8	.6	-3.3	.9
30TH	393.50	-.8	4.9	2473	2637	-.3	1.9	-47.7	-6.2	.5	-2.7	1.0
31ST	407.50	-4.5	-2.9	3173	3202	-1.4	-.9	-46.9	-11.1	.4	-2.0	1.2
32ND	424.50	-7.6	-3.3	3173	3018	-2.4	-1.1	-42.4	-8.2	.2	-1.2	1.2
33RD	441.50	-11.4	-1.1	2297	2308	-4.9	-.5	-34.8	-4.9	.1	-.6	.9
34TH	454.50	-18.8	-1.5	2297	1181	-8.2	-1.3	-23.4	-3.8	.1	-.2	.5
35TH	467.50	-4.6	-2.3	433	704	-10.6	-3.2	-4.6	-2.3	.0	-.0	.3

TABLE 7. SHEAR AND MOMENT DIAGRAMS : BASS BROTHERS OFFICE BUILDING - PHASE I, FT. WORTH
WIND DIRECTION 120 CONFIGURATION A REFERENCE PRESSURE 26.0 PSF GUST FACTOR 1.32

FLOOR	HEIGHT FT	X-FORCE KIPS	Y-FORCE KIPS	X-AREA SQ FT	Y-AREA SQ FT	X-PRESS PSF	Y-PRESS PSF	X-SHEAR KIPS	Y-SHEAR KIPS	X-MOMENT	Y-MOMENT	Z-MOMENT
										1000-FT-KIPS		
GRND	0.00	-20.3	33.1	2333	3000	-8.7	11.0	-320.8	1316.9	-308.1	-108.0	7.6
2ND	20.00	-17.9	29.2	3938	3956	-4.5	7.4	-300.5	1283.8	-282.1	-101.8	8.3
3RD	42.50	-4.4	33.3	2145	2329	-2.1	14.3	-282.6	1254.6	-253.6	-95.3	7.3
4TH	55.50	4.2	37.9	2145	2232	2.0	17.0	-278.2	1221.3	-237.5	-91.6	6.6
5TH	68.50	15.9	34.6	2427	2123	6.5	16.3	-282.4	1183.4	-221.8	-88.0	5.4
6TH	81.50	9.6	29.8	2427	2123	4.0	14.0	-298.3	1148.8	-206.7	-84.2	4.4
7TH	94.50	23.7	37.3	2427	2448	9.8	15.2	-307.9	1119.0	-191.9	-80.3	3.2
8TH	107.50	3.5	39.1	2427	2448	1.4	16.0	-331.6	1081.7	-177.6	-76.1	.5
9TH	120.50	.2	40.0	2427	2448	.1	16.4	-335.1	1042.6	-163.8	-71.8	-1.2
10TH	133.50	-3.1	41.0	2427	2448	-1.3	16.7	-335.2	1002.5	-150.5	-67.4	-2.5
11TH	146.50	-6.4	42.0	2427	2448	-2.7	17.2	-332.1	961.6	-137.8	-63.1	-3.6
12TH	159.50	-7.3	44.1	2427	2448	-3.0	18.0	-325.6	919.5	-125.5	-58.8	-4.4
13TH	172.50	-8.2	46.1	2427	2448	-3.4	18.8	-318.3	875.5	-113.9	-54.6	-5.0
14TH	185.50	-9.1	48.2	2427	2448	-3.8	19.7	-310.1	829.3	-102.8	-50.5	-5.4
15TH	198.50	-10.0	50.2	2427	2448	-4.1	20.5	-300.9	781.2	-92.3	-46.6	-5.5
16TH	211.50	-10.5	49.0	2427	2448	-4.3	20.0	-290.9	731.0	-82.5	-42.7	-5.4
17TH	224.50	-11.0	47.8	2427	2448	-4.5	19.5	-280.4	681.9	-73.3	-39.0	-5.3
18TH	237.50	-11.5	46.6	2427	2448	-4.7	19.0	-269.4	634.1	-64.8	-35.4	-5.2
19TH	250.50	-12.0	45.4	2427	2448	-4.9	18.5	-257.9	587.6	-56.8	-32.0	-5.0
20TH	263.50	-12.5	44.1	2427	2448	-5.1	18.0	-245.9	542.2	-49.5	-28.7	-4.8
21ST	276.50	-13.0	42.9	2427	2448	-5.3	17.5	-233.5	498.1	-42.7	-25.6	-4.6
22ND	289.50	-13.4	41.7	2427	2448	-5.5	17.0	-220.5	455.2	-36.5	-22.6	-4.3
23RD	302.50	-13.9	40.4	2427	2448	-5.7	16.5	-207.1	413.5	-30.9	-19.9	-4.0
24TH	315.50	-13.9	39.4	2427	2448	-5.7	16.1	-193.2	373.0	-25.8	-17.3	-3.8
25TH	328.50	-13.9	38.3	2427	2448	-5.7	15.6	-179.3	333.7	-21.2	-14.8	-3.5
26TH	341.50	-14.0	37.3	2427	2448	-5.8	15.2	-165.4	295.4	-17.1	-12.6	-3.2
27TH	354.50	-14.1	36.2	2427	2448	-5.8	14.8	-151.4	258.1	-13.5	-10.5	-2.9
28TH	367.50	-14.2	35.2	2427	2448	-5.8	14.4	-137.3	221.9	-10.4	-8.7	-2.6
29TH	380.50	-12.4	34.8	2427	2448	-5.1	14.2	-123.1	186.7	-7.7	-7.0	-2.3
30TH	393.50	-6.6	38.1	2473	2637	-2.7	14.5	-110.7	151.9	-5.5	-5.5	-2.1
31ST	407.50	-19.1	29.9	3173	3202	-6.0	9.3	-104.0	113.8	-3.6	-4.0	-2.5
32ND	424.50	-18.3	30.7	3173	3018	-5.8	10.2	-85.0	83.8	-2.0	-2.3	-1.8
33RD	441.50	-25.0	27.7	2297	2308	-10.9	12.0	-66.7	53.2	-.8	-1.1	-1.6
34TH	454.50	-35.3	16.2	2297	1181	-15.4	13.7	-41.7	25.5	-.3	-.4	-1.2
35TH	467.50	-6.4	9.3	433	704	-14.8	13.2	-6.4	9.3	-.1	-.0	.1

TABLE 7. SHEAR AND MOMENT DIAGRAMS : BASS BROTHERS OFFICE BUILDING - PHASE I, FT. WORTH
WIND DIRECTION 130 CONFIGURATION A REFERENCE PRESSURE 26.0 PSF GUST FACTOR 1.32

FLOOR	HEIGHT FT	X-FORCE KIPS	Y-FORCE KIPS	X-AREA SQ FT	Y-AREA SQ FT	X-PRESS PSF	Y-PRESS PSF	X-SHEAR KIPS	Y-SHEAR KIPS	X-MOMENT 1000-FT-KIPS	Y-MOMENT 1000-FT-KIPS	Z-MOMENT 1000-FT-KIPS
GRND	0.00	-27.8	48.1	2333	3000	-11.9	16.0	-301.0	1811.1	-455.0	-86.0	20.9
2ND	20.00	-29.5	33.2	3938	3956	-7.5	8.4	-273.2	1762.9	-419.3	-80.3	22.2
3RD	42.50	-11.5	42.3	2145	2329	-5.4	18.2	-243.7	1729.7	-380.0	-74.5	21.7
4TH	55.50	-1.1	44.9	2145	2232	-.5	20.1	-232.2	1687.4	-357.8	-71.4	21.5
5TH	68.50	13.9	39.0	2427	2123	5.7	18.4	-231.1	1642.5	-336.1	-68.4	20.7
6TH	81.50	12.1	31.1	2427	2123	5.0	14.6	-245.0	1603.5	-315.0	-65.3	20.0
7TH	94.50	20.7	36.8	2427	2448	8.5	15.0	-257.1	1572.4	-294.4	-62.0	19.2
8TH	107.50	2.1	39.3	2427	2448	.9	16.0	-277.8	1535.6	-274.2	-58.5	17.1
9TH	120.50	-1.0	41.8	2427	2448	-.4	17.1	-279.9	1496.3	-254.5	-54.9	16.1
10TH	133.50	-4.0	44.3	2427	2448	-1.6	18.1	-279.0	1454.6	-235.3	-51.3	15.0
11TH	146.50	-6.5	46.8	2427	2448	-2.7	19.1	-274.9	1410.3	-216.7	-47.7	14.0
12TH	159.50	-7.7	50.5	2427	2448	-3.2	20.6	-268.5	1363.5	-198.6	-44.1	13.1
13TH	172.50	-9.0	54.2	2427	2448	-3.7	22.2	-260.8	1313.0	-181.2	-40.7	12.2
14TH	185.50	-10.2	58.0	2427	2448	-4.2	23.7	-251.8	1258.7	-164.5	-37.4	11.5
15TH	198.50	-11.5	61.7	2427	2448	-4.8	25.2	-241.6	1200.8	-148.5	-34.2	11.0
16TH	211.50	-11.7	62.4	2427	2448	-4.8	25.5	-230.0	1139.1	-133.3	-31.1	10.6
17TH	224.50	-11.8	63.0	2427	2448	-4.9	25.8	-218.4	1076.7	-118.9	-28.2	10.1
18TH	237.50	-11.9	63.7	2427	2448	-4.9	26.0	-206.6	1013.7	-105.3	-25.4	9.7
19TH	250.50	-12.0	64.4	2427	2448	-5.0	26.3	-194.6	949.9	-92.6	-22.8	9.2
20TH	263.50	-12.1	65.1	2427	2448	-5.0	26.6	-182.6	885.5	-80.6	-20.4	8.7
21ST	276.50	-12.3	65.8	2427	2448	-5.0	26.9	-170.5	820.4	-69.6	-18.1	8.2
22ND	289.50	-12.4	66.5	2427	2448	-5.1	27.2	-158.2	754.6	-59.3	-15.9	7.7
23RD	302.50	-12.4	67.1	2427	2448	-5.1	27.4	-145.9	688.1	-49.9	-13.9	7.1
24TH	315.50	-11.4	66.4	2427	2448	-4.7	27.1	-133.5	621.0	-41.4	-12.1	6.6
25TH	328.50	-10.6	65.8	2427	2448	-4.4	26.9	-122.0	554.5	-33.8	-10.5	5.9
26TH	341.50	-9.7	65.1	2427	2448	-4.0	26.6	-111.5	488.8	-27.0	-9.0	5.1
27TH	354.50	-8.8	64.4	2427	2448	-3.6	26.3	-101.8	423.7	-21.1	-7.6	4.3
28TH	367.50	-7.9	63.7	2427	2448	-3.3	26.0	-93.0	359.3	-16.0	-6.3	3.3
29TH	380.50	-5.6	61.8	2427	2448	-2.3	25.2	-85.0	295.6	-11.7	-5.1	2.3
30TH	393.50	.4	62.3	2473	2637	.2	23.6	-79.4	233.8	-8.3	-4.1	1.1
31ST	407.50	-14.3	48.7	3173	3202	-4.5	15.2	-79.8	171.5	-5.5	-3.0	-.7
32ND	424.50	-15.2	44.3	3173	3018	-4.8	14.7	-65.5	122.8	-3.0	-1.7	-1.4
33RD	441.50	-21.4	38.3	2297	2308	-9.3	16.6	-50.3	78.5	-1.2	-.7	-2.0
34TH	454.50	-26.1	23.9	2297	1181	-11.4	20.3	-29.0	40.2	-.5	-.2	-2.0
35TH	467.50	-2.8	16.2	433	704	-6.6	23.1	-2.8	16.2	-.1	-.0	0

TABLE 7. SHEAR AND MOMENT DIAGRAMS : BASS BROTHERS OFFICE BUILDING - PHASE I, FT. WORTH
WIND DIRECTION 140 CONFIGURATION A REFERENCE PRESSURE 26.0 PSF GUST FACTOR 1.32

FLOOR	HEIGHT FT	X-FORCE KIPS	Y-FORCE KIPS	X-AREA SQ FT	Y-AREA SQ FT	X-PRESS PSF	Y-PRESS PSF	X-SHEAR KIPS	Y-SHEAR KIPS	X-MOMENT	Y-MOMENT	Z-MOMENT
										1000-FT-KIPS		
GRND	0.00	-35.1	50.0	2333	3000	-15.0	16.7	-353.2	1905.1	-477.3	-113.3	18.6
2ND	20.00	-26.2	39.8	3938	3956	-6.7	10.1	-318.1	1855.1	-439.7	-106.6	20.2
3RD	42.50	-11.9	44.9	2145	2329	-5.6	19.3	-291.9	1815.2	-398.4	-99.8	19.4
4TH	55.50	-1.3	46.9	2145	2232	-.6	21.0	-280.0	1770.4	-375.1	-96.0	19.1
5TH	68.50	14.8	40.0	2427	2123	6.1	18.8	-278.7	1723.5	-352.3	-92.4	18.2
6TH	81.50	13.2	32.1	2427	2123	5.5	15.1	-293.5	1683.5	-330.2	-88.7	17.7
7TH	94.50	23.2	37.7	2427	2448	9.6	15.4	-306.7	1651.4	-308.5	-84.8	17.0
8TH	107.50	2.4	40.4	2427	2448	1.0	16.5	-329.9	1613.6	-287.3	-80.7	15.2
9TH	120.50	.6	43.2	2427	2448	.2	17.6	-332.4	1573.2	-266.6	-76.3	14.5
10TH	133.50	-1.2	46.0	2427	2448	-.5	18.8	-333.0	1530.0	-246.4	-72.0	13.6
11TH	146.50	-2.6	48.8	2427	2448	-1.1	19.9	-331.7	1484.1	-226.8	-67.7	12.7
12TH	159.50	-3.4	53.1	2427	2448	-1.4	21.7	-329.1	1435.2	-207.8	-63.4	11.8
13TH	172.50	-4.4	57.3	2427	2448	-1.8	23.4	-325.7	1382.1	-189.5	-59.2	11.0
14TH	185.50	-5.4	61.6	2427	2448	-2.2	25.2	-321.2	1324.8	-171.9	-54.9	10.4
15TH	198.50	-6.4	65.8	2427	2448	-2.6	26.9	-315.8	1263.2	-155.1	-50.8	9.8
16TH	211.50	-7.6	66.4	2427	2448	-3.1	27.1	-309.4	1197.4	-139.1	-46.7	9.5
17TH	224.50	-8.7	66.9	2427	2448	-3.6	27.3	-301.8	1131.0	-124.0	-42.8	9.1
18TH	237.50	-9.9	67.4	2427	2448	-4.1	27.5	-293.1	1064.1	-109.7	-38.9	8.6
19TH	250.50	-11.0	68.0	2427	2448	-4.5	27.8	-283.3	996.6	-96.3	-35.2	8.2
20TH	263.50	-12.1	68.5	2427	2448	-5.0	28.0	-272.3	928.7	-83.8	-31.5	7.7
21ST	276.50	-13.3	69.0	2427	2448	-5.5	28.2	-260.1	860.2	-72.2	-28.1	7.2
22ND	289.50	-14.4	69.5	2427	2448	-5.9	28.4	-246.8	791.2	-61.5	-24.8	6.6
23RD	302.50	-15.4	70.0	2427	2448	-6.4	28.6	-232.4	721.7	-51.6	-21.7	6.0
24TH	315.50	-15.6	69.7	2427	2448	-6.4	28.5	-217.0	651.7	-42.7	-18.8	5.4
25TH	328.50	-16.0	69.5	2427	2448	-6.6	28.4	-201.4	582.0	-34.7	-16.0	4.7
26TH	341.50	-16.3	69.2	2427	2448	-6.7	28.3	-185.4	512.5	-27.6	-13.5	4.0
27TH	354.50	-16.6	69.0	2427	2448	-6.9	28.2	-169.1	443.3	-21.3	-11.2	3.1
28TH	367.50	-17.0	68.8	2427	2448	-7.0	28.1	-152.5	374.3	-16.0	-9.1	2.3
29TH	380.50	-14.7	67.5	2427	2448	-6.1	27.6	-135.5	305.5	-11.6	-7.3	1.3
30TH	393.50	-8.3	69.6	2473	2637	-3.4	26.4	-120.8	238.0	-8.1	-5.6	.2
31ST	407.50	-24.3	52.8	3173	3202	-7.7	16.5	-112.5	168.4	-5.2	-4.0	-1.4
32ND	424.50	-24.4	42.6	3173	3018	-7.7	14.1	-88.2	115.6	-2.8	-2.2	-2.0
33RD	441.50	-27.8	32.3	2297	2308	-12.1	14.0	-63.8	73.0	-1.2	-1.0	-2.3
34TH	454.50	-30.8	23.9	2297	1181	-13.4	20.2	-36.1	40.7	-.5	-.3	-1.8
35TH	467.50	-5.3	16.8	433	704	-12.2	23.9	-5.3	16.8	-.1	-.0	.1

TABLE 7. SHEAR AND MOMENT DIAGRAMS : BASS BROTHERS OFFICE BUILDING - PHASE I, FT. WORTH
WIND DIRECTION 150 CONFIGURATION A REFERENCE PRESSURE 26.0 PSF GUST FACTOR 1.32

FLOOR	HEIGHT FT	X-FORCE KIPS	Y-FORCE KIPS	X-AREA SQ FT	Y-AREA SQ FT	X-PRESS PSF	Y-PRESS PSF	X-SHEAR KIPS	Y-SHEAR KIPS	X-MOMENT 1000-FT-KIPS	Y-MOMENT 1000-FT-KIPS	Z-MOMENT 1000-FT-KIPS
GRND	0.00	-30.2	46.8	2333	3000	-12.9	15.6	-169.8	1718.5	-436.4	-70.2	6.5
2ND	20.00	-17.1	41.4	3938	3956	-4.3	10.5	-139.6	1671.7	-402.5	-67.1	7.7
3RD	42.50	-7.0	40.9	2145	2329	-3.3	17.6	-122.5	1630.3	-365.4	-64.2	6.6
4TH	55.50	3.4	42.7	2145	2232	1.6	19.1	-115.5	1589.4	-344.5	-62.6	6.1
5TH	68.50	19.7	36.3	2427	2123	8.1	17.1	-118.9	1546.7	-324.1	-61.1	5.2
6TH	81.50	16.5	29.6	2427	2123	6.8	13.9	-138.5	1510.4	-304.2	-59.4	4.8
7TH	94.50	24.1	32.0	2427	2448	9.9	13.1	-155.0	1480.8	-284.8	-57.5	4.2
8TH	107.50	5.9	34.0	2427	2448	2.4	13.9	-179.1	1448.8	-265.7	-55.4	2.8
9TH	120.50	5.9	36.5	2427	2448	2.4	14.9	-185.0	1414.8	-247.1	-53.0	2.3
10TH	133.50	5.9	39.1	2427	2448	2.4	16.0	-190.9	1378.3	-229.0	-50.6	1.6
11TH	146.50	4.9	41.5	2427	2448	2.0	17.0	-196.8	1339.2	-211.3	-48.0	.9
12TH	159.50	4.1	44.9	2427	2448	1.7	18.3	-201.7	1297.7	-194.2	-45.4	.1
13TH	172.50	3.3	48.3	2427	2448	1.3	19.7	-205.8	1252.9	-177.6	-42.8	-.5
14TH	185.50	2.4	51.7	2427	2448	1.0	21.1	-209.1	1204.6	-161.6	-40.1	-.9
15TH	198.50	1.5	55.0	2427	2448	.6	22.5	-211.5	1152.9	-146.3	-37.4	-1.2
16TH	211.50	-.2	56.1	2427	2448	-.1	22.9	-213.0	1097.9	-131.6	-34.6	-1.3
17TH	224.50	-2.0	57.2	2427	2448	-.8	23.4	-212.8	1041.8	-117.7	-31.8	-1.4
18TH	237.50	-3.8	58.3	2427	2448	-1.5	23.8	-210.8	984.6	-104.6	-29.1	-1.4
19TH	250.50	-5.5	59.3	2427	2448	-2.3	24.2	-207.0	926.3	-92.1	-26.4	-1.5
20TH	263.50	-7.3	60.4	2427	2448	-3.0	24.7	-201.5	867.0	-80.5	-23.7	-1.5
21ST	276.50	-9.0	61.4	2427	2448	-3.7	25.1	-194.2	806.6	-69.6	-21.1	-1.4
22ND	289.50	-10.8	62.5	2427	2448	-4.5	25.5	-185.2	745.2	-59.5	-18.7	-1.4
23RD	302.50	-12.5	63.5	2427	2448	-5.1	25.9	-174.4	682.7	-50.2	-16.3	-1.3
24TH	315.50	-12.4	63.2	2427	2448	-5.1	25.8	-161.9	619.2	-41.8	-14.2	-1.2
25TH	328.50	-12.4	63.0	2427	2448	-5.1	25.7	-149.5	556.0	-34.1	-12.1	-1.2
26TH	341.50	-12.4	62.7	2427	2448	-5.1	25.6	-137.0	493.0	-27.3	-10.3	-1.3
27TH	354.50	-12.4	62.5	2427	2448	-5.1	25.5	-124.6	430.3	-21.3	-8.6	-1.5
28TH	367.50	-12.4	62.2	2427	2448	-5.1	25.4	-112.2	367.9	-16.1	-7.0	-1.8
29TH	380.50	-10.0	62.4	2427	2448	-4.1	25.5	-99.8	305.6	-11.8	-5.6	-2.2
30TH	393.50	-5.0	68.2	2473	2637	-2.0	25.9	-89.7	243.2	-8.2	-4.4	-2.7
31ST	407.50	-15.0	56.3	3173	3202	-4.7	17.6	-84.7	175.0	-5.3	-3.2	-3.2
32ND	424.50	-15.6	46.7	3173	3018	-4.9	15.5	-69.7	118.7	-2.8	-1.9	-3.0
33RD	441.50	-22.1	34.9	2297	2308	-9.6	15.1	-54.1	72.0	-1.1	-.8	-2.5
34TH	454.50	-27.4	22.2	2297	1181	-11.9	18.8	-32.0	37.1	-.4	-.3	-1.6
35TH	467.50	-4.6	14.9	433	704	-10.6	21.1	-4.6	14.9	-.1	-.0	.1

TABLE 7. SHEAR AND MOMENT DIAGRAMS : BASS BROTHERS OFFICE BUILDING - PHASE I, FT. WORTH
WIND DIRECTION 160 CONFIGURATION A REFERENCE PRESSURE 26.0 PSF GUST FACTOR 1.32

FLOOR	HEIGHT FT	X-FORCE KIPS	Y-FORCE KIPS	X-AREA SQ FT	Y-AREA SQ FT	X-PRESS PSF	Y-PRESS PSF	X-SHEAR KIPS	Y-SHEAR KIPS	X-MOMENT	Y-MOMENT	Z-MOMENT
										1000-FT-KIPS		
GRND	0.00	-10.7	31.1	2333	3000	-4.6	10.4	401.5	1362.0	-348.0	66.3	5.8
2ND	20.00	21.0	35.8	3938	3956	5.3	9.1	412.2	1330.9	-321.0	58.2	6.3
3RD	42.50	15.1	29.2	2145	2329	7.1	12.5	391.2	1295.1	-291.5	49.2	4.5
4TH	55.50	21.2	31.7	2145	2232	9.9	14.2	376.1	1265.9	-274.8	44.2	3.5
5TH	68.50	31.9	26.8	2427	2123	13.1	12.6	354.9	1234.2	-258.6	39.4	2.4
6TH	81.50	24.9	24.6	2427	2123	10.3	11.6	323.0	1207.4	-242.7	35.0	2.0
7TH	94.50	31.0	25.5	2427	2448	12.8	10.4	298.1	1182.8	-227.2	31.0	1.5
8TH	107.50	15.9	27.9	2427	2448	6.5	11.4	267.1	1157.3	-212.0	27.3	.6
9TH	120.50	17.2	30.7	2427	2448	7.1	12.5	251.2	1129.4	-197.1	23.9	.1
10TH	133.50	18.4	33.5	2427	2448	7.6	13.7	234.1	1098.6	-182.6	20.8	-.4
11TH	146.50	18.2	35.8	2427	2448	7.5	14.6	215.6	1065.2	-168.6	17.9	-1.0
12TH	159.50	18.1	37.9	2427	2448	7.4	15.5	197.5	1029.3	-155.0	15.2	-1.5
13TH	172.50	18.0	39.9	2427	2448	7.4	16.3	179.4	991.5	-141.8	12.7	-1.9
14TH	185.50	17.9	41.9	2427	2448	7.4	17.1	161.4	951.6	-129.2	10.5	-2.2
15TH	198.50	17.8	44.0	2427	2448	7.3	18.0	143.6	909.6	-117.1	8.5	-2.4
16TH	211.50	16.5	44.4	2427	2448	6.8	18.1	125.8	865.7	-105.6	6.8	-2.6
17TH	224.50	15.2	44.8	2427	2448	6.3	18.3	109.3	821.2	-94.6	5.2	-2.7
18TH	237.50	13.9	45.1	2427	2448	5.7	18.4	94.1	776.4	-84.2	3.9	-2.7
19TH	250.50	12.6	45.5	2427	2448	5.2	18.6	80.2	731.3	-74.4	2.8	-2.8
20TH	263.50	11.3	45.9	2427	2448	4.7	18.7	67.6	685.8	-65.2	1.8	-2.8
21ST	276.50	10.0	46.2	2427	2448	4.1	18.9	56.3	640.0	-56.6	1.0	-2.7
22ND	289.50	8.7	46.6	2427	2448	3.6	19.0	46.3	593.8	-48.6	.4	-2.7
23RD	302.50	7.5	46.9	2427	2448	3.1	19.2	37.6	547.2	-41.1	-.2	-2.5
24TH	315.50	7.1	47.4	2427	2448	2.9	19.4	30.0	500.3	-34.3	-.6	-2.4
25TH	328.50	6.7	48.0	2427	2448	2.8	19.6	22.9	452.9	-28.1	-1.0	-2.3
26TH	341.50	6.3	48.6	2427	2448	2.6	19.8	16.2	404.9	-22.6	-1.2	-2.3
27TH	354.50	5.9	49.1	2427	2448	2.4	20.1	9.9	356.3	-17.6	-1.4	-2.3
28TH	367.50	5.4	49.7	2427	2448	2.2	20.3	4.0	307.2	-13.3	-1.5	-2.3
29TH	380.50	7.0	51.4	2427	2448	2.9	21.0	-1.4	257.5	-9.6	-1.5	-2.5
30TH	393.50	9.9	59.1	2473	2637	4.0	22.4	-8.5	206.1	-6.6	-1.4	-2.6
31ST	407.50	6.1	50.2	3173	3202	1.9	15.7	-18.4	146.9	-4.1	-1.2	-2.6
32ND	424.50	1.9	42.0	3173	3018	.6	13.9	-24.5	96.8	-2.1	-.9	-2.3
33RD	441.50	-8.3	30.8	2297	2308	-3.6	13.3	-26.4	54.7	-.8	-.5	-1.7
34TH	454.50	-14.6	15.0	2297	1181	-6.4	12.7	-18.1	24.0	-.3	-.2	-.8
35TH	467.50	-3.5	9.0	433	704	-8.0	12.7	-3.5	9.0	-.1	-.0	.1

TABLE 7. SHEAR AND MOMENT DIAGRAMS : BASS BROTHERS OFFICE BUILDING - PHASE I, FT. WORTH
WIND DIRECTION 170 CONFIGURATION A REFERENCE PRESSURE 26.0 PSF GUST FACTOR 1.32

FLOOR	HEIGHT FT	X-FORCE KIPS	Y-FORCE KIPS	X-AREA SQ FT	Y-AREA SQ FT	X-PRESS PSF	Y-PRESS PSF	X-SHEAR KIPS	Y-SHEAR KIPS	X-MOMENT 1000-FT-KIPS	Y-MOMENT 1000-FT-KIPS	Z-MOMENT 1000-FT-KIPS
GRND	0.00	11.3	22.1	2333	3000	4.8	7.4	800.6	1406.8	-363.1	157.3	3.9
2ND	20.00	50.6	30.0	3938	3956	12.8	7.6	789.3	1384.7	-335.2	141.4	3.8
3RD	42.50	29.1	28.6	2145	2329	13.6	12.3	738.8	1354.7	-304.3	124.2	1.7
4TH	55.50	35.1	33.7	2145	2232	16.4	15.1	709.7	1326.1	-286.9	114.8	.8
5TH	68.50	45.5	29.6	2427	2123	18.7	13.9	674.5	1292.5	-269.9	105.8	-.3
6TH	81.50	35.7	31.4	2427	2123	14.7	14.8	629.1	1262.9	-253.3	97.3	-.9
7TH	94.50	39.9	32.5	2427	2448	16.4	13.3	593.4	1231.5	-237.1	89.4	-1.2
8TH	107.50	27.4	35.3	2427	2448	11.3	14.4	553.5	1199.0	-221.3	81.9	-1.6
9TH	120.50	27.7	36.9	2427	2448	11.4	15.1	526.1	1163.7	-205.9	74.9	-1.9
10TH	133.50	28.1	38.6	2427	2448	11.6	15.8	498.4	1126.8	-191.0	68.2	-2.3
11TH	146.50	27.7	39.7	2427	2448	11.4	16.2	470.3	1088.2	-176.6	61.9	-2.6
12TH	159.50	27.4	40.3	2427	2448	11.3	16.5	442.6	1048.5	-162.7	56.0	-2.9
13TH	172.50	26.9	40.9	2427	2448	11.1	16.7	415.2	1008.2	-149.4	50.4	-3.2
14TH	185.50	26.4	41.5	2427	2448	10.9	16.9	388.3	967.3	-136.5	45.2	-3.5
15TH	198.50	25.9	42.0	2427	2448	10.7	17.2	362.0	925.9	-124.2	40.3	-3.8
16TH	211.50	24.8	42.4	2427	2448	10.2	17.3	336.1	883.8	-112.5	35.8	-4.1
17TH	224.50	23.8	42.7	2427	2448	9.8	17.4	311.2	841.4	-101.3	31.6	-4.3
18TH	237.50	22.8	43.0	2427	2448	9.4	17.6	287.4	798.7	-90.6	27.7	-4.5
19TH	250.50	21.7	43.3	2427	2448	9.0	17.7	264.7	755.7	-80.5	24.1	-4.7
20TH	263.50	20.7	43.6	2427	2448	8.5	17.8	242.9	712.3	-70.9	20.8	-4.8
21ST	276.50	19.7	43.9	2427	2448	8.1	17.9	222.3	668.7	-62.0	17.8	-4.9
22ND	289.50	18.6	44.2	2427	2448	7.7	18.1	202.6	624.8	-53.6	15.0	-5.0
23RD	302.50	17.7	44.5	2427	2448	7.3	18.2	184.0	580.6	-45.7	12.5	-5.0
24TH	315.50	17.5	45.9	2427	2448	7.2	18.7	166.3	536.1	-38.5	10.2	-5.0
25TH	328.50	17.3	47.3	2427	2448	7.1	19.3	148.8	490.2	-31.8	8.2	-4.9
26TH	341.50	17.1	48.6	2427	2448	7.0	19.9	131.5	443.0	-25.7	6.4	-4.8
27TH	354.50	16.9	50.0	2427	2448	7.0	20.4	114.4	394.3	-20.3	4.8	-4.6
28TH	367.50	16.7	51.4	2427	2448	6.9	21.0	97.5	344.3	-15.5	3.4	-4.4
29TH	380.50	18.6	53.1	2427	2448	7.7	21.7	80.8	292.9	-11.3	2.2	-4.1
30TH	393.50	21.3	59.6	2473	2637	8.6	22.6	62.2	239.8	-7.9	1.3	-3.8
31ST	407.50	23.1	59.4	3173	3202	7.3	18.6	40.9	180.2	-4.9	.6	-3.3
32ND	424.50	18.3	55.6	3173	3018	5.8	18.4	17.7	120.8	-2.4	.1	-2.5
33RD	441.50	4.0	43.2	2297	2308	1.7	18.7	-.6	65.2	-.8	-.1	-1.6
34TH	454.50	-3.4	14.6	2297	1181	-1.5	12.3	-4.6	22.0	-.2	-.0	-.5
35TH	467.50	-1.1	7.4	433	704	-2.6	10.6	-1.1	7.4	-.0	-.0	.1

TABLE 7. SHEAR AND MOMENT DIAGRAMS : BASS BROTHERS OFFICE BUILDING - PHASE I, FT. WORTH
WIND DIRECTION 180 CONFIGURATION A REFERENCE PRESSURE 26.0 PSF GUST FACTOR 1.32

FLOOR	HEIGHT FT	X-FORCE KIPS	Y-FORCE KIPS	X-AREA SQ FT	Y-AREA SQ FT	X-PRESS PSF	Y-PRESS PSF	X-SHEAR KIPS	Y-SHEAR KIPS	X-MOMENT	Y-MOMENT 1000-FT-KIPS	Z-MOMENT
GRND	0.00	15.4	30.9	2333	3000	6.6	10.3	1322.1	1874.8	-466.3	289.0	-4.9
2ND	20.00	67.0	46.0	3938	3956	17.0	11.6	1306.8	1843.9	-429.2	262.7	-4.3
3RD	42.50	35.9	39.4	2145	2329	16.8	16.9	1239.7	1797.9	-388.2	234.1	-6.1
4TH	55.50	43.0	45.9	2145	2232	20.1	20.6	1203.8	1758.6	-365.1	218.2	-6.9
5TH	68.50	54.7	42.1	2427	2123	22.5	19.8	1160.8	1712.6	-342.5	202.8	-8.0
6TH	81.50	48.5	44.8	2427	2123	20.0	21.1	1106.1	1670.5	-320.5	188.1	-8.6
7TH	94.50	52.7	49.5	2427	2448	21.7	20.2	1057.6	1625.6	-299.1	174.0	-9.0
8TH	107.50	41.2	54.2	2427	2448	17.0	22.1	1004.9	1576.2	-278.3	160.6	-9.4
9TH	120.50	41.0	56.4	2427	2448	16.9	23.0	963.7	1522.0	-258.1	147.8	-9.7
10TH	133.50	40.7	58.6	2427	2448	16.8	23.9	922.7	1465.6	-238.7	135.6	-9.8
11TH	146.50	42.5	59.9	2427	2448	17.5	24.5	882.0	1407.1	-220.1	123.8	-9.6
12TH	159.50	43.4	59.3	2427	2448	17.9	24.2	839.5	1347.1	-202.2	112.6	-9.5
13TH	172.50	43.8	58.7	2427	2448	18.1	24.0	796.1	1287.8	-185.0	102.0	-9.4
14TH	185.50	44.2	58.1	2427	2448	18.2	23.7	752.3	1229.0	-168.7	91.9	-9.4
15TH	198.50	44.6	57.5	2427	2448	18.4	23.5	708.1	1170.9	-153.1	82.5	-9.4
16TH	211.50	43.8	57.5	2427	2448	18.0	23.5	663.5	1113.4	-138.2	73.5	-9.6
17TH	224.50	42.8	57.4	2427	2448	17.7	23.4	619.7	1055.9	-124.1	65.2	-9.6
18TH	237.50	41.9	57.3	2427	2448	17.3	23.4	576.9	998.5	-110.8	57.4	-9.7
19TH	250.50	41.0	57.2	2427	2448	16.9	23.3	534.9	941.2	-98.2	50.2	-9.6
20TH	263.50	40.1	57.1	2427	2448	16.5	23.3	494.0	884.0	-86.3	43.5	-9.6
21ST	276.50	39.1	56.9	2427	2448	16.1	23.3	453.9	827.0	-75.2	37.3	-9.5
22ND	289.50	38.2	56.8	2427	2448	15.7	23.2	414.8	770.0	-64.8	31.7	-9.3
23RD	302.50	37.4	56.7	2427	2448	15.4	23.2	376.6	713.2	-55.1	26.6	-9.1
24TH	315.50	36.5	58.4	2427	2448	15.0	23.9	339.2	656.5	-46.2	21.9	-8.9
25TH	328.50	35.5	60.1	2427	2448	14.6	24.6	302.7	598.0	-38.1	17.7	-8.5
26TH	341.50	34.5	61.9	2427	2448	14.2	25.3	267.3	537.9	-30.7	14.0	-8.0
27TH	354.50	33.5	63.6	2427	2448	13.8	26.0	232.8	476.0	-24.1	10.8	-7.4
28TH	367.50	32.4	65.3	2427	2448	13.4	26.7	199.3	412.4	-18.3	8.0	-6.6
29TH	380.50	34.3	66.2	2427	2448	14.1	27.0	166.9	347.1	-13.4	5.6	-5.7
30TH	393.50	36.8	71.0	2473	2637	14.9	26.9	132.6	280.9	-9.3	3.6	-4.9
31ST	407.50	42.7	66.5	3173	3202	13.5	20.8	95.8	210.0	-5.9	2.0	-3.8
32ND	424.50	34.2	64.9	3173	3018	10.8	21.5	53.1	143.5	-2.9	.8	-2.7
33RD	441.50	14.8	51.7	2297	2308	6.4	22.4	18.9	78.6	-1.0	.2	-1.4
34TH	454.50	5.3	16.8	2297	1181	2.3	14.2	4.1	26.9	-.3	.0	.0
35TH	467.50	-1.2	10.1	433	704	-2.8	14.3	-1.2	10.1	-.1	-.0	.1

TABLE 7. SHEAR AND MOMENT DIAGRAMS : BASS BROTHERS OFFICE BUILDING - PHASE I, FT. WORTH

WIND DIRECTION 190 CONFIGURATION A REFERENCE PRESSURE 26.0 PSF GUST FACTOR 1.32

FLOOR	HEIGHT FT	X-FORCE KIPS	Y-FORCE KIPS	X-AREA SQ FT	Y-AREA SQ FT	X-PRESS PSF	Y-PRESS PSF	X-SHEAR KIPS	Y-SHEAR KIPS	X-MOMENT 1000-FT-KIPS	Y-MOMENT 1000-FT-KIPS	Z-MOMENT 1000-FT-KIPS
GRND	0.00	7.1	38.4	2333	3000	3.0	12.8	1018.8	1802.8	-429.6	225.8	7.6
2ND	20.00	53.1	60.3	3938	3956	13.5	15.2	1011.8	1764.4	-394.0	205.5	7.9
3RD	42.50	28.2	43.7	2145	2329	13.1	18.8	958.7	1704.1	-354.9	183.3	6.2
4TH	55.50	34.6	48.0	2145	2232	16.1	21.5	930.5	1660.4	-333.1	171.0	5.5
5TH	68.50	44.7	42.8	2427	2123	18.4	20.2	895.8	1612.4	-311.8	159.2	4.4
6TH	81.50	37.8	43.7	2427	2123	15.6	20.6	851.1	1569.6	-291.1	147.8	3.8
7TH	94.50	41.7	47.1	2427	2448	17.2	19.2	813.3	1525.9	-271.0	137.0	3.4
8TH	107.50	29.6	51.7	2427	2448	12.2	21.1	771.6	1478.8	-251.5	126.7	2.8
9TH	120.50	29.7	54.5	2427	2448	12.2	22.3	742.0	1427.1	-232.6	116.8	2.5
10TH	133.50	29.8	57.3	2427	2448	12.3	23.4	712.3	1372.6	-214.4	107.4	2.3
11TH	146.50	31.5	59.3	2427	2448	13.0	24.2	682.5	1315.3	-196.9	98.3	2.3
12TH	159.50	32.6	59.5	2427	2448	13.4	24.3	651.0	1256.0	-180.2	89.7	2.2
13TH	172.50	33.2	59.7	2427	2448	13.7	24.4	618.4	1196.4	-164.2	81.4	2.1
14TH	185.50	33.8	59.9	2427	2448	13.9	24.5	585.2	1136.7	-149.1	73.6	1.9
15TH	198.50	34.5	60.1	2427	2448	14.2	24.6	551.4	1076.8	-134.7	66.2	1.6
16TH	211.50	33.6	59.5	2427	2448	13.8	24.3	516.9	1016.7	-121.1	59.2	1.2
17TH	224.50	32.6	58.8	2427	2448	13.4	24.0	483.3	957.1	-108.3	52.7	.9
18TH	237.50	31.7	58.0	2427	2448	13.1	23.7	450.7	898.3	-96.2	46.7	.5
19TH	250.50	30.7	57.2	2427	2448	12.7	23.4	419.0	840.3	-84.9	41.0	.2
20TH	263.50	29.8	56.5	2427	2448	12.3	23.1	388.2	783.1	-74.3	35.8	-.2
21ST	276.50	28.8	55.7	2427	2448	11.9	22.8	358.5	726.6	-64.5	30.9	-.5
22ND	289.50	27.9	55.0	2427	2448	11.5	22.4	329.7	670.9	-55.4	26.5	-.9
23RD	302.50	27.0	54.2	2427	2448	11.1	22.1	301.8	615.9	-47.1	22.3	-1.2
24TH	315.50	26.9	53.9	2427	2448	11.1	22.0	274.8	561.8	-39.4	18.6	-1.6
25TH	328.50	26.7	53.7	2427	2448	11.0	22.0	248.0	507.8	-32.5	15.2	-1.8
26TH	341.50	26.5	53.6	2427	2448	10.9	21.9	221.3	454.1	-26.2	12.2	-2.0
27TH	354.50	26.3	53.4	2427	2448	10.8	21.8	194.8	400.5	-20.7	9.4	-2.1
28TH	367.50	26.1	53.2	2427	2448	10.8	21.7	168.5	347.2	-15.8	7.1	-2.1
29TH	380.50	27.7	53.5	2427	2448	11.4	21.8	142.3	294.0	-11.6	5.1	-2.0
30TH	393.50	29.9	58.8	2473	2637	12.1	22.3	114.6	240.5	-8.2	3.4	-1.8
31ST	407.50	34.3	56.2	3173	3202	10.8	17.6	84.7	181.7	-5.2	2.0	-1.4
32ND	424.50	28.6	54.9	3173	3018	9.0	18.2	50.4	125.5	-2.6	.9	-1.0
33RD	441.50	14.3	44.0	2297	2308	6.2	19.1	21.8	70.6	-.9	.2	-.5
34TH	454.50	7.7	16.6	2297	1181	3.4	14.0	7.5	26.5	-.3	.0	.1
35TH	467.50	-.2	10.0	433	704	-.4	14.2	-.2	10.0	-.1	-.0	.1

TABLE 7. SHEAR AND MOMENT DIAGRAMS : BASS BROTHERS OFFICE BUILDING - PHASE I, FT. WORTH
WIND DIRECTION 200 CONFIGURATION A REFERENCE PRESSURE 26.0 PSF GUST FACTOR 1.32

FLOOR	HEIGHT FT	X-FORCE KIPS	Y-FORCE KIPS	X-AREA SQ FT	Y-AREA SQ FT	X-PRESS PSF	Y-PRESS PSF	X-SHEAR KIPS	Y-SHEAR KIPS	X-MOMENT	Y-MOMENT 1000-FT-KIPS	Z-MOMENT
GRND	0.00	21.3	32.7	2333	3000	9.1	10.9	1332.7	1476.6	-342.3	313.9	24.4
2ND	20.00	66.8	54.6	3938	3956	17.0	13.8	1311.4	1443.9	-313.1	287.4	24.1
3RD	42.50	34.4	38.7	2145	2329	16.0	16.6	1244.5	1389.3	-281.2	258.7	22.4
4TH	55.50	40.9	42.6	2145	2232	19.1	19.1	1210.2	1350.6	-263.4	242.7	21.5
5TH	68.50	51.7	36.3	2427	2123	21.3	17.1	1169.3	1308.0	-246.1	227.2	20.4
6TH	81.50	38.6	38.2	2427	2123	15.9	18.0	1117.6	1271.7	-229.4	212.4	19.9
7TH	94.50	41.7	41.4	2427	2448	17.2	16.9	1079.0	1233.5	-213.1	198.1	19.6
8TH	107.50	32.2	44.7	2427	2448	13.3	18.3	1037.3	1192.1	-197.3	184.3	18.9
9TH	120.50	33.3	46.3	2427	2448	13.7	18.9	1005.1	1147.4	-182.1	171.1	18.3
10TH	133.50	34.4	47.9	2427	2448	14.2	19.6	971.7	1101.0	-167.5	158.2	17.6
11TH	146.50	35.6	49.1	2427	2448	14.7	20.1	937.3	1053.1	-153.5	145.8	17.0
12TH	159.50	37.3	49.9	2427	2448	15.4	20.4	901.6	1004.0	-140.1	133.8	16.5
13TH	172.50	38.8	50.6	2427	2448	16.0	20.7	864.4	954.1	-127.4	122.4	15.8
14TH	185.50	40.3	51.3	2427	2448	16.6	21.0	825.6	903.5	-115.3	111.4	15.2
15TH	198.50	41.9	52.0	2427	2448	17.3	21.3	785.3	852.2	-103.9	100.9	14.5
16TH	211.50	41.5	51.2	2427	2448	17.1	20.9	743.4	800.2	-93.2	91.0	13.7
17TH	224.50	40.9	50.1	2427	2448	16.9	20.5	702.0	749.0	-83.1	81.6	13.0
18TH	237.50	40.4	49.1	2427	2448	16.6	20.1	661.0	698.8	-73.7	72.7	12.2
19TH	250.50	39.8	48.1	2427	2448	16.4	19.6	620.7	649.8	-64.9	64.4	11.4
20TH	263.50	39.3	47.0	2427	2448	16.2	19.2	580.9	601.7	-56.8	56.6	10.6
21ST	276.50	38.7	46.0	2427	2448	16.0	18.8	541.6	554.7	-49.3	49.3	9.8
22ND	289.50	38.2	44.9	2427	2448	15.7	18.3	502.9	508.7	-42.4	42.5	9.0
23RD	302.50	37.7	43.8	2427	2448	15.5	17.9	464.7	463.8	-36.0	36.2	8.1
24TH	315.50	38.2	41.9	2427	2448	15.7	17.1	427.0	420.0	-30.3	30.4	7.3
25TH	328.50	38.6	40.0	2427	2448	15.9	16.3	388.9	378.1	-25.1	25.1	6.4
26TH	341.50	39.1	38.1	2427	2448	16.1	15.6	350.2	338.1	-20.4	20.3	5.6
27TH	354.50	39.5	36.3	2427	2448	16.3	14.8	311.2	300.0	-16.3	16.0	4.7
28TH	367.50	40.0	34.4	2427	2448	16.5	14.0	271.6	263.7	-12.6	12.2	3.9
29TH	380.50	41.5	36.7	2427	2448	17.1	15.0	231.6	229.4	-9.4	8.9	3.1
30TH	393.50	43.3	48.9	2473	2637	17.5	18.6	190.1	192.7	-6.7	6.2	2.5
31ST	407.50	53.6	41.7	3173	3202	16.9	13.0	146.8	143.8	-4.3	3.8	2.7
32ND	424.50	45.5	41.8	3173	3018	14.3	13.8	93.2	102.1	-2.2	1.8	1.9
33RD	441.50	26.7	34.3	2297	2308	11.6	14.9	47.7	60.3	-.9	.6	1.0
34TH	454.50	18.9	15.7	2297	1181	8.2	13.3	20.9	26.0	-.3	.2	.5
35TH	467.50	2.1	10.2	433	704	4.8	14.6	2.1	10.2	-.1	.0	.0

TABLE 7. SHEAR AND MOMENT DIAGRAMS : BASS BROTHERS OFFICE BUILDING - PHASE I, FT. WORTH
WIND DIRECTION 210 CONFIGURATION A REFERENCE PRESSURE 26.0 PSF GUST FACTOR 1.32

FLOOR	HEIGHT FT	X-FORCE KIPS	Y-FORCE KIPS	X-AREA SQ FT	Y-AREA SQ FT	X-PRESS PSF	Y-PRESS PSF	X-SHEAR KIPS	Y-SHEAR KIPS	X-MOMENT 1000-FT-KIPS	Y-MOMENT 1000-FT-KIPS	Z-MOMENT 1000-FT-KIPS
GRND	0.00	22.3	35.1	2333	3000	9.6	11.7	1690.2	1239.5	-255.1	420.7	43.5
2ND	20.00	73.4	56.5	3938	3956	18.6	14.3	1667.8	1204.3	-230.7	387.1	43.5
3RD	42.50	37.6	35.1	2145	2329	17.5	15.1	1594.5	1147.8	-204.2	350.4	42.2
4TH	55.50	46.7	41.1	2145	2232	21.8	18.4	1556.9	1112.7	-189.5	329.9	41.5
5TH	68.50	62.2	35.6	2427	2123	25.6	16.8	1510.2	1071.6	-175.3	310.0	40.4
6TH	81.50	43.9	38.9	2427	2123	18.1	18.3	1448.0	1036.0	-161.6	290.8	40.2
7TH	94.50	46.2	42.8	2427	2448	19.0	17.5	1404.1	997.1	-148.4	272.2	40.2
8TH	107.50	37.8	45.0	2427	2448	15.6	18.4	1357.9	954.3	-135.7	254.3	39.7
9TH	120.50	39.0	44.7	2427	2448	16.1	18.2	1320.2	909.3	-123.6	236.9	38.9
10TH	133.50	40.3	44.4	2427	2448	16.6	18.1	1281.1	864.7	-112.1	220.0	37.9
11TH	146.50	41.2	44.2	2427	2448	17.0	18.1	1240.8	820.3	-101.1	203.6	36.9
12TH	159.50	42.6	45.3	2427	2448	17.6	18.5	1199.6	776.0	-90.8	187.7	35.7
13TH	172.50	44.1	46.3	2427	2448	18.2	18.9	1157.0	730.8	-81.0	172.4	34.6
14TH	185.50	45.5	47.3	2427	2448	18.8	19.3	1112.9	684.5	-71.8	157.6	33.4
15TH	198.50	47.0	48.3	2427	2448	19.4	19.7	1067.4	637.2	-63.2	143.5	32.3
16TH	211.50	47.9	47.3	2427	2448	19.7	19.3	1020.4	588.9	-55.2	129.9	31.2
17TH	224.50	48.8	46.1	2427	2448	20.1	18.8	972.5	541.6	-47.9	116.9	30.0
18TH	237.50	49.7	45.0	2427	2448	20.5	18.4	923.7	495.5	-41.1	104.6	28.9
19TH	250.50	50.6	43.9	2427	2448	20.8	17.9	874.0	450.5	-35.0	92.9	27.7
20TH	263.50	51.5	42.7	2427	2448	21.2	17.4	823.4	406.7	-29.4	81.9	26.4
21ST	276.50	52.4	41.6	2427	2448	21.6	17.0	771.9	364.0	-24.4	71.5	25.2
22ND	289.50	53.3	40.4	2427	2448	21.9	16.5	719.6	322.4	-19.9	61.8	23.9
23RD	302.50	54.2	39.2	2427	2448	22.3	16.0	666.3	282.0	-16.0	52.8	22.6
24TH	315.50	54.6	36.3	2427	2448	22.5	14.8	612.1	242.8	-12.6	44.5	21.3
25TH	328.50	54.9	33.5	2427	2448	22.6	13.7	557.5	206.5	-9.7	36.9	20.0
26TH	341.50	55.2	30.7	2427	2448	22.7	12.5	502.6	173.0	-7.2	30.0	18.6
27TH	354.50	55.5	27.8	2427	2448	22.9	11.4	447.4	142.3	-5.2	23.9	17.2
28TH	367.50	55.8	25.0	2427	2448	23.0	10.2	391.9	114.5	-3.5	18.4	15.7
29TH	380.50	57.0	28.1	2427	2448	23.5	11.5	336.1	89.5	-2.2	13.7	14.2
30TH	393.50	58.8	43.4	2473	2637	23.8	16.5	279.1	61.4	-1.2	9.7	13.0
31ST	407.50	74.8	6.2	3173	3202	23.6	1.9	220.4	18.0	-.6	6.2	13.1
32ND	424.50	62.6	2.5	3173	3018	19.7	.8	145.5	11.8	-.4	3.1	9.3
33RD	441.50	42.3	2.2	2297	2308	18.4	.9	83.0	9.3	-.2	1.1	5.1
34TH	454.50	36.6	4.3	2297	1181	16.0	3.6	40.7	7.1	-.1	.3	1.6
35TH	467.50	4.0	2.8	433	704	9.3	4.0	4.0	2.8	-.0	.0	.2

TABLE 7. SHEAR AND MOMENT DIAGRAMS : BASS BROTHERS OFFICE BUILDING - PHASE I, FT. WORTH
WIND DIRECTION 220 CONFIGURATION A REFERENCE PRESSURE 26.0 PSF GUST FACTOR 1.32

FLOOR	HEIGHT FT	X-FORCE KIPS	Y-FORCE KIPS	X-AREA SQ FT	Y-AREA SQ FT	X-PRESS PSF	Y-PRESS PSF	X-SHEAR KIPS	Y-SHEAR KIPS	X-MOMENT	Y-MOMENT	Z-MOMENT
										1000-FT-KIPS		
GRND	0.00	35.2	22.0	2333	3000	15.1	7.3	1959.4	798.0	-138.2	504.0	41.9
2ND	20.00	66.8	35.5	3938	3956	17.0	9.0	1924.2	776.1	-122.4	465.1	41.7
3RD	42.50	34.2	21.4	2145	2329	16.0	9.2	1857.4	740.5	-105.4	422.6	41.1
4TH	55.50	46.9	32.1	2145	2232	21.9	14.4	1823.2	719.2	-95.9	398.7	40.4
5TH	68.50	66.9	31.9	2427	2123	27.6	15.0	1776.3	687.0	-86.7	375.3	39.6
6TH	81.50	48.0	33.9	2427	2123	19.8	16.0	1709.3	655.1	-78.0	352.6	40.2
7TH	94.50	50.8	35.6	2427	2448	20.9	14.5	1661.3	621.2	-69.7	330.7	40.8
8TH	107.50	44.3	35.7	2427	2448	18.3	14.6	1610.6	585.6	-61.9	309.4	40.5
9TH	120.50	45.3	34.0	2427	2448	18.7	13.9	1566.2	549.9	-54.5	288.8	39.9
10TH	133.50	46.2	32.3	2427	2448	19.1	13.2	1521.0	515.9	-47.6	268.7	39.0
11TH	146.50	47.8	31.2	2427	2448	19.7	12.7	1474.7	483.5	-41.1	249.2	37.9
12TH	159.50	48.9	32.9	2427	2448	20.2	13.4	1427.0	452.3	-35.0	230.4	36.6
13TH	172.50	49.9	34.5	2427	2448	20.6	14.1	1378.0	419.5	-29.3	212.1	35.4
14TH	185.50	51.0	36.2	2427	2448	21.0	14.8	1328.1	385.0	-24.1	194.6	34.3
15TH	198.50	52.0	37.8	2427	2448	21.4	15.4	1277.1	348.8	-19.3	177.6	33.3
16TH	211.50	53.4	36.5	2427	2448	22.0	14.9	1225.2	311.0	-15.0	161.4	32.4
17TH	224.50	54.9	35.1	2427	2448	22.6	14.3	1171.7	274.4	-11.2	145.8	31.4
18TH	237.50	56.4	33.7	2427	2448	23.2	13.8	1116.8	239.3	-7.9	130.9	30.4
19TH	250.50	57.8	32.3	2427	2448	23.8	13.2	1060.4	205.7	-5.0	116.7	29.4
20TH	263.50	59.3	30.8	2427	2448	24.4	12.6	1002.6	173.4	-2.5	103.3	28.4
21ST	276.50	60.8	29.4	2427	2448	25.0	12.0	943.3	142.6	-.5	90.7	27.3
22ND	289.50	62.2	28.0	2427	2448	25.6	11.4	882.5	113.2	1.2	78.8	26.2
23RD	302.50	63.7	26.5	2427	2448	26.3	10.8	820.3	85.2	2.5	67.8	25.1
24TH	315.50	64.3	23.8	2427	2448	26.5	9.7	756.5	58.7	3.4	57.5	23.9
25TH	328.50	64.8	21.2	2427	2448	26.7	8.7	692.2	34.9	4.0	48.1	22.7
26TH	341.50	65.2	18.6	2427	2448	26.9	7.6	627.5	13.6	4.3	39.5	21.4
27TH	354.50	65.7	16.0	2427	2448	27.1	6.5	562.3	-5.0	4.4	31.8	20.1
28TH	367.50	66.1	13.4	2427	2448	27.3	5.5	496.6	-20.9	4.2	24.9	18.7
29TH	380.50	66.5	16.2	2427	2448	27.4	6.6	430.5	-34.3	3.9	18.9	17.2
30TH	393.50	67.6	29.4	2473	2637	27.3	11.1	364.0	-50.5	3.3	13.7	16.1
31ST	407.50	87.4	-22.9	3173	3202	27.6	-7.2	296.4	-79.9	2.4	9.1	16.5
32ND	424.50	77.1	-24.7	3173	3018	24.3	-8.2	209.0	-57.0	1.2	4.8	11.6
33RD	441.50	61.1	-17.8	2297	2308	26.6	-7.7	131.9	-32.3	.5	1.9	6.5
34TH	454.50	62.2	-8.4	2297	1181	27.1	-7.1	70.8	-14.4	.2	.6	2.1
35TH	467.50	8.6	-6.0	433	704	19.9	-8.5	8.6	-6.0	.0	.1	.2

TABLE 7. SHEAR AND MOMENT DIAGRAMS : BASS BROTHERS OFFICE BUILDING - PHASE I, FT. WORTH
WIND DIRECTION 230 CONFIGURATION A REFERENCE PRESSURE 26.0 PSF GUST FACTOR 1.32

FLOOR	HEIGHT FT	X-FORCE KIPS	Y-FORCE KIPS	X-AREA SQ FT	Y-AREA SQ FT	X-PRESS PSF	Y-PRESS PSF	X-SHEAR KIPS	Y-SHEAR KIPS	X-MOMENT	Y-MOMENT	Z-MOMENT
										1000-FT-KIPS		
GRND	0.00	46.8	12.7	2333	3000	20.1	4.2	2091.3	330.4	-41.2	529.0	28.2
2ND	20.00	68.0	18.4	3938	3956	17.3	4.7	2044.5	317.8	-34.7	487.7	28.1
3RD	42.50	33.1	10.5	2145	2329	15.4	4.5	1976.5	299.3	-27.8	442.4	27.3
4TH	55.50	44.9	24.2	2145	2232	20.9	10.8	1943.4	288.9	-24.0	416.9	26.5
5TH	68.50	64.2	25.1	2427	2123	26.5	11.8	1898.6	264.7	-20.4	392.0	25.8
6TH	81.50	48.7	24.5	2427	2123	20.1	11.6	1834.3	239.6	-17.1	367.7	26.9
7TH	94.50	52.4	20.4	2427	2448	21.6	8.3	1785.6	215.1	-14.1	344.2	28.1
8TH	107.50	50.7	17.7	2427	2448	20.9	7.2	1733.2	194.7	-11.5	321.3	28.6
9TH	120.50	53.4	14.0	2427	2448	22.0	5.7	1682.5	176.9	-9.1	299.1	28.4
10TH	133.50	56.1	10.3	2427	2448	23.1	4.2	1629.1	162.9	-6.8	277.6	27.6
11TH	146.50	58.1	7.6	2427	2448	24.0	3.1	1572.9	152.6	-4.8	256.8	26.3
12TH	159.50	59.0	10.1	2427	2448	24.3	4.1	1514.8	145.0	-2.9	236.7	24.7
13TH	172.50	59.7	12.5	2427	2448	24.6	5.1	1455.8	134.9	-1.0	217.4	23.2
14TH	185.50	60.4	14.9	2427	2448	24.9	6.1	1396.1	122.4	.6	198.8	21.9
15TH	198.50	61.2	17.3	2427	2448	25.2	7.1	1335.7	107.5	2.1	181.1	20.8
16TH	211.50	61.8	16.8	2427	2448	25.5	6.9	1274.5	90.1	3.4	164.1	19.9
17TH	224.50	62.4	16.1	2427	2448	25.7	6.6	1212.7	73.3	4.5	148.0	19.1
18TH	237.50	62.9	15.4	2427	2448	25.9	6.3	1150.3	57.2	5.3	132.6	18.2
19TH	250.50	63.4	14.7	2427	2448	26.1	6.0	1087.4	41.8	6.0	118.0	17.4
20TH	263.50	64.0	14.0	2427	2448	26.4	5.7	1023.9	27.1	6.4	104.3	16.5
21ST	276.50	64.5	13.3	2427	2448	26.6	5.4	960.0	13.1	6.7	91.4	15.8
22ND	289.50	65.1	12.6	2427	2448	26.8	5.1	895.4	-.2	6.8	79.4	15.0
23RD	302.50	65.6	11.7	2427	2448	27.0	4.8	830.4	-12.7	6.7	68.2	14.2
24TH	315.50	66.0	9.3	2427	2448	27.2	3.8	764.8	-24.5	6.4	57.8	13.5
25TH	328.50	66.2	7.0	2427	2448	27.3	2.9	698.8	-33.8	6.1	48.3	12.7
26TH	341.50	66.5	4.6	2427	2448	27.4	1.9	632.6	-40.8	5.6	39.6	11.9
27TH	354.50	66.8	2.3	2427	2448	27.5	.9	566.1	-45.4	5.0	31.8	11.0
28TH	367.50	67.0	-.1	2427	2448	27.6	-.0	499.3	-47.7	4.4	24.9	10.0
29TH	380.50	67.1	3.6	2427	2448	27.7	1.5	432.3	-47.6	3.8	18.8	9.0
30TH	393.50	68.1	17.6	2473	2637	27.5	6.7	365.2	-51.2	3.1	13.7	8.4
31ST	407.50	87.7	-16.4	3173	3202	27.6	-5.1	297.1	-68.7	2.3	9.0	9.2
32ND	424.50	78.6	-19.2	3173	3018	24.8	-6.4	209.4	-52.3	1.3	4.7	6.7
33RD	441.50	62.0	-15.4	2297	2308	27.0	-6.7	130.8	-33.1	.5	1.8	4.0
34TH	454.50	62.4	-9.8	2297	1181	27.2	-8.3	68.8	-17.7	.2	.5	1.7
35TH	467.50	6.3	-7.9	433	704	14.6	-11.2	6.3	-7.9	.1	.0	.3

TABLE 7. SHEAR AND MOMENT DIAGRAMS : BASS BROTHERS OFFICE BUILDING - PHASE I, FT. WORTH
WIND DIRECTION 240 CONFIGURATION A REFERENCE PRESSURE 26.0 PSF GUST FACTOR 1.32

FLOOR	HEIGHT FT	X-FORCE KIPS	Y-FORCE KIPS	X-AREA SQ FT	Y-AREA SQ FT	X-PRESS PSF	Y-PRESS PSF	X-SHEAR KIPS	Y-SHEAR KIPS	X-MOMENT 1000-FT-KIPS	Y-MOMENT 1000-FT-KIPS	Z-MOMENT 1000-FT-KIPS
GRND	0.00	46.0	-1.6	2333	3000	19.7	-.5	2107.9	83.0	-17.2	540.9	6.0
2ND	20.00	65.3	-11.2	3938	3956	16.6	-2.8	2061.9	84.6	-15.5	499.2	5.6
3RD	42.50	33.7	-3.0	2145	2329	15.7	-1.3	1996.6	95.8	-13.5	453.6	4.1
4TH	55.50	43.4	13.5	2145	2232	20.2	6.1	1962.9	98.8	-12.2	427.8	3.3
5TH	68.50	60.3	15.7	2427	2123	24.8	7.4	1919.6	85.3	-11.0	402.6	2.6
6TH	81.50	47.2	11.1	2427	2123	19.5	5.2	1859.3	69.6	-10.0	378.0	3.9
7TH	94.50	49.7	.5	2427	2448	20.5	.2	1812.1	58.6	-9.2	354.2	5.3
8TH	107.50	49.8	-2.1	2427	2448	20.5	-.9	1762.4	58.1	-8.4	330.9	6.2
9TH	120.50	52.7	-4.4	2427	2448	21.7	-1.8	1712.6	60.2	-7.7	308.3	6.5
10TH	133.50	55.6	-6.7	2427	2448	22.9	-2.7	1659.9	64.6	-6.9	286.4	6.2
11TH	146.50	58.0	-7.9	2427	2448	23.9	-3.2	1604.3	71.3	-6.0	265.2	5.6
12TH	159.50	58.9	-4.1	2427	2448	24.3	-1.7	1546.3	79.2	-5.0	244.7	4.6
13TH	172.50	59.7	-.3	2427	2448	24.6	-.1	1487.4	83.3	-3.9	225.0	3.8
14TH	185.50	60.5	3.4	2427	2448	24.9	1.4	1427.7	83.6	-2.9	206.1	3.3
15TH	198.50	61.3	7.2	2427	2448	25.3	2.9	1367.2	80.2	-1.8	187.9	3.0
16TH	211.50	62.0	7.8	2427	2448	25.5	3.2	1306.0	73.1	-.8	170.5	2.9
17TH	224.50	62.5	8.2	2427	2448	25.8	3.3	1244.0	65.2	.1	153.9	2.9
18TH	237.50	63.1	8.5	2427	2448	26.0	3.5	1181.5	57.1	.9	138.2	2.9
19TH	250.50	63.6	8.9	2427	2448	26.2	3.6	1118.4	48.5	1.6	123.2	2.9
20TH	263.50	64.2	9.3	2427	2448	26.5	3.8	1054.8	39.6	2.2	109.1	2.9
21ST	276.50	64.8	9.6	2427	2448	26.7	3.9	990.6	30.3	2.6	95.8	2.9
22ND	289.50	65.3	10.0	2427	2448	26.9	4.1	925.8	20.7	2.9	83.4	3.0
23RD	302.50	65.9	10.2	2427	2448	27.2	4.2	860.5	10.7	3.2	71.7	3.0
24TH	315.50	66.5	8.2	2427	2448	27.4	3.3	794.6	.5	3.2	61.0	3.1
25TH	328.50	67.0	6.1	2427	2448	27.6	2.5	728.1	-7.7	3.2	51.1	3.1
26TH	341.50	67.5	4.1	2427	2448	27.8	1.7	661.2	-13.8	3.0	42.1	3.0
27TH	354.50	68.0	2.1	2427	2448	28.0	.9	593.7	-18.0	2.8	33.9	2.8
28TH	367.50	68.5	.1	2427	2448	28.2	.0	525.7	-20.1	2.6	26.6	2.5
29TH	380.50	69.1	4.3	2427	2448	28.5	1.8	457.2	-20.1	2.3	20.2	2.1
30TH	393.50	70.7	19.4	2473	2637	28.6	7.4	388.1	-24.4	2.0	14.7	2.0
31ST	407.50	90.7	-8.8	3173	3202	28.6	-2.8	317.4	-43.9	1.6	9.8	3.2
32ND	424.50	84.0	-12.9	3173	3018	26.5	-4.3	226.8	-35.1	.9	5.2	2.2
33RD	441.50	66.2	-9.5	2297	2308	28.8	-4.1	142.8	-22.1	.4	2.0	1.3
34TH	454.50	68.3	-5.7	2297	1181	29.7	-4.8	76.6	-12.6	.2	.6	.5
35TH	467.50	8.4	-6.9	433	704	19.3	-9.8	8.4	-6.9	.0	.1	.2

TABLE 7. SHEAR AND MOMENT DIAGRAMS : BASS BROTHERS OFFICE BUILDING - PHASE I, FT. WORTH

WIND DIRECTION 250 CONFIGURATION A REFERENCE PRESSURE 26.0 PSF GUST FACTOR 1.32

FLOOR	HEIGHT FT	X-FORCE KIPS	Y-FORCE KIPS	X-AREA SQ FT	Y-AREA SQ FT	X-PRESS PSF	Y-PRESS PSF	X-SHEAR KIPS	Y-SHEAR KIPS	X-MOMENT	Y-MOMENT 1000-FT-KIPS	Z-MOMENT
GRND	0.00	43.7	-22.0	2333	3000	18.7	-7.3	2126.2	-518.1	124.0	547.7	-8.6
2ND	20.00	62.0	-48.5	3938	3956	15.7	-12.3	2082.5	-496.1	113.9	505.6	-9.1
3RD	42.50	34.6	-23.8	2145	2329	16.1	-10.2	2020.5	-447.5	103.3	459.5	-11.2
4TH	55.50	44.2	-4.9	2145	2232	20.6	-2.2	1985.9	-423.7	97.6	433.4	-12.5
5TH	68.50	61.2	.5	2427	2123	25.2	.2	1941.7	-418.8	92.1	407.9	-13.4
6TH	81.50	45.5	-3.9	2427	2123	18.7	-1.9	1880.5	-419.3	86.7	383.0	-12.3
7TH	94.50	47.7	-13.8	2427	2448	19.6	-5.6	1835.0	-415.3	81.3	358.9	-11.0
8TH	107.50	50.0	-16.8	2427	2448	20.6	-6.9	1787.3	-401.5	76.0	335.4	-10.1
9TH	120.50	52.6	-19.1	2427	2448	21.7	-7.8	1737.3	-384.8	70.9	312.4	-9.7
10TH	133.50	55.1	-21.5	2427	2448	22.7	-8.8	1684.7	-365.6	66.0	290.2	-9.4
11TH	146.50	57.5	-22.6	2427	2448	23.7	-9.2	1629.6	-344.2	61.4	268.7	-9.5
12TH	159.50	58.9	-19.6	2427	2448	24.3	-8.0	1572.1	-321.6	57.0	247.8	-9.7
13TH	172.50	60.0	-16.6	2427	2448	24.7	-6.8	1513.3	-301.9	53.0	227.8	-9.6
14TH	185.50	61.2	-13.6	2427	2448	25.2	-5.6	1453.2	-285.3	49.2	208.5	-9.4
15TH	198.50	62.4	-10.6	2427	2448	25.7	-4.3	1392.0	-271.7	45.5	190.0	-8.9
16TH	211.50	63.2	-9.7	2427	2448	26.0	-4.0	1329.7	-261.1	42.1	172.3	-8.1
17TH	224.50	63.9	-8.9	2427	2448	26.3	-3.6	1266.4	-251.4	38.8	155.4	-7.4
18TH	237.50	64.6	-8.1	2427	2448	26.6	-3.3	1202.5	-242.4	35.5	139.4	-6.6
19TH	250.50	65.3	-7.3	2427	2448	26.9	-3.0	1137.9	-234.4	32.4	124.2	-5.9
20TH	263.50	66.0	-6.4	2427	2448	27.2	-2.6	1072.6	-227.1	29.4	109.8	-5.1
21ST	276.50	66.7	-5.6	2427	2448	27.5	-2.3	1006.5	-220.7	26.5	96.3	-4.3
22ND	289.50	67.5	-4.8	2427	2448	27.8	-1.9	939.8	-215.1	23.7	83.7	-3.4
23RD	302.50	68.2	-4.1	2427	2448	28.1	-1.7	872.3	-210.3	20.9	71.9	-2.6
24TH	315.50	68.7	-7.1	2427	2448	28.3	-2.9	804.2	-206.2	18.2	61.0	-1.7
25TH	328.50	69.1	-10.2	2427	2448	28.5	-4.1	735.5	-199.1	15.6	51.0	-1.0
26TH	341.50	69.6	-13.2	2427	2448	28.7	-5.4	666.4	-188.9	13.1	41.9	-.5
27TH	354.50	70.0	-16.2	2427	2448	28.8	-6.6	596.8	-175.7	10.7	33.6	-.1
28TH	367.50	70.4	-19.2	2427	2448	29.0	-7.8	526.8	-159.6	8.5	26.3	.1
29TH	380.50	70.8	-17.6	2427	2448	29.2	-7.2	456.4	-140.4	6.6	20.0	.2
30TH	393.50	72.6	-9.9	2473	2637	29.4	-3.7	385.5	-122.7	4.9	14.5	.3
31ST	407.50	90.7	-37.3	3173	3202	28.6	-11.7	312.9	-112.8	3.2	9.6	1.4
32ND	424.50	84.4	-35.2	3173	3018	26.6	-11.7	222.2	-75.5	1.6	5.0	1.0
33RD	441.50	64.0	-21.1	2297	2308	27.9	-9.2	137.9	-40.3	.6	2.0	.8
34TH	454.50	64.6	-10.3	2297	1181	28.1	-8.7	73.9	-19.1	.2	.6	.3
35TH	467.50	9.3	-8.8	433	704	21.6	-12.6	9.3	-8.8	.1	.1	.1

TABLE 7. SHEAR AND MOMENT DIAGRAMS : BASS BROTHERS OFFICE BUILDING - PHASE I, FT. WORTH
WIND DIRECTION 260 CONFIGURATION A REFERENCE PRESSURE 26.0 PSF GUST FACTOR 1.32

FLOOR	HEIGHT FT	X-FORCE KIPS	Y-FORCE KIPS	X-AREA SQ FT	Y-AREA SQ FT	X-PRESS PSF	Y-PRESS PSF	X-SHEAR KIPS	Y-SHEAR KIPS	X-MOMENT 1000-FT-KIPS	Y-MOMENT 1000-FT-KIPS	Z-MOMENT 1000-FT-KIPS
GRND	0.00	33.8	-42.1	2333	3000	14.5	-14.0	2047.3	-1282.2	329.7	538.3	-.9
2ND	20.00	57.3	-75.2	3938	3956	14.6	-19.0	2013.6	-1240.1	304.5	497.7	-1.6
3RD	42.50	35.8	-40.1	2145	2329	16.7	-17.2	1956.2	-1164.9	277.4	453.1	-4.2
4TH	55.50	43.3	-22.3	2145	2232	20.2	-10.0	1920.4	-1124.8	262.6	427.9	-5.6
5TH	68.50	57.7	-17.7	2427	2123	23.8	-8.3	1877.1	-1102.5	248.1	403.2	-6.8
6TH	81.50	41.7	-22.6	2427	2123	17.2	-10.6	1819.4	-1084.8	233.9	379.1	-6.1
7TH	94.50	43.4	-30.1	2427	2448	17.9	-12.3	1777.7	-1062.2	219.9	355.8	-5.1
8TH	107.50	45.2	-32.1	2427	2448	18.6	-13.1	1734.3	-1032.1	206.3	332.9	-4.5
9TH	120.50	47.0	-33.6	2427	2448	19.4	-13.7	1689.0	-1000.0	193.1	310.7	-4.2
10TH	133.50	48.7	-35.1	2427	2448	20.1	-14.3	1642.0	-966.4	180.3	289.0	-4.1
11TH	146.50	51.6	-35.7	2427	2448	21.2	-14.6	1593.3	-931.3	168.0	268.0	-4.0
12TH	159.50	52.8	-33.3	2427	2448	21.8	-13.6	1541.7	-895.6	156.1	247.6	-4.0
13TH	172.50	53.7	-30.9	2427	2448	22.1	-12.6	1488.9	-862.3	144.7	227.9	-3.9
14TH	185.50	54.6	-28.4	2427	2448	22.5	-11.6	1435.2	-831.5	133.7	208.9	-3.7
15TH	198.50	55.5	-26.0	2427	2448	22.9	-10.6	1380.5	-803.0	123.0	190.6	-3.2
16TH	211.50	57.4	-26.6	2427	2448	23.6	-10.9	1325.0	-777.0	112.8	173.0	-2.5
17TH	224.50	59.2	-27.2	2427	2448	24.4	-11.1	1267.7	-750.4	102.8	156.2	-1.8
18TH	237.50	61.1	-27.9	2427	2448	25.2	-11.4	1208.4	-723.2	93.3	140.1	-1.1
19TH	250.50	62.9	-28.5	2427	2448	25.9	-11.7	1147.4	-695.3	84.0	124.8	-.4
20TH	263.50	64.8	-29.2	2427	2448	26.7	-11.9	1084.4	-666.8	75.2	110.3	.3
21ST	276.50	66.6	-29.8	2427	2448	27.4	-12.2	1019.7	-637.6	66.7	96.6	1.1
22ND	289.50	68.4	-30.5	2427	2448	28.2	-12.4	953.1	-607.8	58.6	83.8	1.8
23RD	302.50	70.3	-31.3	2427	2448	29.0	-12.8	884.6	-577.3	50.9	71.8	2.5
24TH	315.50	70.9	-35.0	2427	2448	29.2	-14.3	814.4	-546.0	43.6	60.8	3.3
25TH	328.50	71.4	-38.7	2427	2448	29.4	-15.8	743.5	-511.0	36.7	50.7	3.8
26TH	341.50	71.8	-42.4	2427	2448	29.6	-17.3	672.1	-472.3	30.3	41.5	4.2
27TH	354.50	72.3	-46.1	2427	2448	29.8	-18.8	600.3	-429.9	24.5	33.2	4.4
28TH	367.50	72.8	-49.8	2427	2448	30.0	-20.3	528.0	-383.9	19.2	25.8	4.4
29TH	380.50	73.5	-49.2	2427	2448	30.3	-20.1	455.2	-334.1	14.5	19.5	4.2
30TH	393.50	75.7	-45.5	2473	2637	30.6	-17.3	381.7	-284.9	10.5	14.0	4.1
31ST	407.50	92.1	-80.2	3173	3202	29.0	-25.0	305.9	-239.4	6.8	9.2	4.7
32ND	424.50	83.4	-72.2	3173	3018	26.3	-23.9	213.9	-159.2	3.4	4.8	3.5
33RD	441.50	62.1	-45.0	2297	2308	27.0	-19.5	130.4	-87.1	1.3	1.9	2.4
34TH	454.50	59.0	-23.9	2297	1181	25.7	-20.2	68.3	-42.1	.5	.6	1.0
35TH	467.50	9.3	-18.2	433	704	21.6	-25.8	9.3	-18.2	.1	.1	.3

TABLE 7. SHEAR AND MOMENT DIAGRAMS : BASS BROTHERS OFFICE BUILDING - PHASE I, FT. WORTH
WIND DIRECTION 270 CONFIGURATION A REFERENCE PRESSURE 26.0 PSF GUST FACTOR 1.32

FLOOR	HEIGHT FT	X-FORCE KIPS	Y-FORCE KIPS	X-AREA SQ FT	Y-AREA SQ FT	X-PRESS PSF	Y-PRESS PSF	X-SHEAR KIPS	Y-SHEAR KIPS	X-MOMENT	Y-MOMENT	Z-MOMENT
										1000-FT-KIPS		
GRND	0.00	22.1	-44.6	2333	3000	9.5	-14.9	1651.7	-1414.7	368.0	441.4	10.8
2ND	20.00	42.8	-72.0	3938	3956	10.9	-18.2	1629.7	-1370.1	340.1	408.6	10.1
3RD	42.50	30.8	-40.3	2145	2329	14.4	-17.3	1586.9	-1298.1	310.1	372.4	8.0
4TH	55.50	35.7	-25.2	2145	2232	16.6	-11.3	1556.1	-1257.8	293.5	351.9	6.8
5TH	68.50	46.3	-22.1	2427	2123	19.1	-10.4	1520.4	-1232.6	277.3	331.9	5.5
6TH	81.50	34.1	-26.7	2427	2123	14.1	-12.6	1474.1	-1210.5	261.4	312.5	5.8
7TH	94.50	37.4	-33.6	2427	2448	15.4	-13.7	1440.0	-1183.8	245.9	293.5	6.3
8TH	107.50	33.3	-34.3	2427	2448	13.7	-14.0	1402.6	-1150.2	230.7	275.1	6.4
9TH	120.50	35.4	-34.3	2427	2448	14.6	-14.0	1369.3	-1115.9	216.0	257.0	6.4
10TH	133.50	37.6	-34.3	2427	2448	15.5	-14.0	1333.9	-1081.6	201.7	239.5	6.4
11TH	146.50	40.1	-34.2	2427	2448	16.5	-14.0	1296.2	-1047.3	187.9	222.4	6.3
12TH	159.50	40.9	-33.2	2427	2448	16.8	-13.5	1256.1	-1013.1	174.5	205.8	6.0
13TH	172.50	41.2	-32.1	2427	2448	17.0	-13.1	1215.2	-980.0	161.5	189.7	5.7
14TH	185.50	41.6	-31.0	2427	2448	17.1	-12.7	1174.0	-947.9	149.0	174.2	5.5
15TH	198.50	41.9	-30.0	2427	2448	17.3	-12.2	1132.4	-916.8	136.9	159.2	5.4
16TH	211.50	43.8	-31.2	2427	2448	18.1	-12.7	1090.4	-886.9	125.1	144.8	5.4
17TH	224.50	45.7	-32.3	2427	2448	18.8	-13.2	1046.6	-855.7	113.8	130.9	5.3
18TH	237.50	47.6	-33.5	2427	2448	19.6	-13.7	1000.9	-823.3	102.9	117.6	5.3
19TH	250.50	49.6	-34.7	2427	2448	20.4	-14.2	953.3	-789.8	92.4	104.9	5.3
20TH	263.50	51.5	-35.9	2427	2448	21.2	-14.7	903.7	-755.1	82.4	92.8	5.2
21ST	276.50	53.4	-37.1	2427	2448	22.0	-15.2	852.2	-719.2	72.8	81.4	5.2
22ND	289.50	55.3	-38.3	2427	2448	22.8	-15.6	798.8	-682.1	63.7	70.6	5.2
23RD	302.50	57.3	-39.6	2427	2448	23.6	-16.2	743.4	-643.8	55.1	60.6	5.2
24TH	315.50	58.2	-42.9	2427	2448	24.0	-17.5	686.2	-604.1	46.9	51.3	5.3
25TH	328.50	59.1	-46.2	2427	2448	24.4	-18.9	628.0	-561.2	39.4	42.8	5.2
26TH	341.50	60.0	-49.4	2427	2448	24.7	-20.2	568.8	-515.1	32.4	35.0	5.1
27TH	354.50	60.9	-52.7	2427	2448	25.1	-21.5	508.8	-465.7	26.0	28.0	4.9
28TH	367.50	61.8	-55.9	2427	2448	25.5	-22.8	447.8	-413.0	20.3	21.8	4.6
29TH	380.50	63.0	-55.5	2427	2448	26.0	-22.7	386.0	-357.1	15.3	16.4	4.3
30TH	393.50	66.2	-53.3	2473	2637	26.7	-20.2	323.0	-301.6	11.0	11.8	4.0
31ST	407.50	77.9	-82.6	3173	3202	24.6	-25.8	256.8	-248.4	7.2	7.7	4.3
32ND	424.50	70.3	-74.4	3173	3018	22.2	-24.7	178.9	-165.8	3.6	4.0	3.2
33RD	441.50	51.8	-46.3	2297	2308	22.5	-20.1	108.6	-91.4	1.4	1.5	2.2
34TH	454.50	48.9	-24.5	2297	1181	21.3	-20.7	56.8	-45.1	.6	.5	.9
35TH	467.50	7.9	-20.6	433	704	18.3	-29.2	7.9	-20.6	.1	.1	.4

TABLE 7. SHEAR AND MOMENT DIAGRAMS : BASS BROTHERS OFFICE BUILDING - PHASE I, FT. WORTH
WIND DIRECTION 280 CONFIGURATION A REFERENCE PRESSURE 26.0 PSF GUST FACTOR 1.32

FLOOR	HEIGHT FT	X-FORCE KIPS	Y-FORCE KIPS	X-AREA SQ FT	Y-AREA SQ FT	X-PRESS PSF	Y-PRESS PSF	X-SHEAR KIPS	Y-SHEAR KIPS	X-MOMENT 1000-FT-KIPS	Y-MOMENT 1000-FT-KIPS	Z-MOMENT 1000-FT-KIPS
GRND	0.00	14.2	-63.1	2333	3000	6.1	-21.0	1521.6	-1607.4	397.2	386.5	15.2
2ND	20.00	40.9	-87.4	3938	3956	10.4	-22.1	1507.4	-1544.3	365.6	356.2	14.2
3RD	42.50	30.0	-46.6	2145	2329	14.0	-20.0	1466.5	-1457.0	331.9	322.8	11.8
4TH	55.50	35.0	-30.5	2145	2232	16.3	-13.6	1436.5	-1410.4	313.2	303.9	10.5
5TH	68.50	46.7	-28.8	2427	2123	19.2	-13.5	1401.5	-1379.9	295.1	285.5	8.9
6TH	81.50	37.2	-33.1	2427	2123	15.3	-15.6	1354.8	-1351.1	277.4	267.5	8.9
7TH	94.50	41.5	-39.0	2427	2448	17.1	-15.9	1317.6	-1318.0	260.0	250.2	9.1
8TH	107.50	32.6	-39.9	2427	2448	13.4	-16.3	1276.1	-1279.0	243.1	233.3	8.8
9TH	120.50	36.3	-40.0	2427	2448	15.0	-16.4	1243.5	-1239.1	226.8	216.9	8.8
10TH	133.50	40.1	-40.2	2427	2448	16.5	-16.4	1207.2	-1199.1	210.9	201.0	8.7
11TH	146.50	44.1	-40.3	2427	2448	18.2	-16.5	1167.1	-1158.9	195.6	185.6	8.5
12TH	159.50	45.3	-39.9	2427	2448	18.7	-16.3	1123.0	-1118.6	180.8	170.7	8.0
13TH	172.50	46.0	-39.5	2427	2448	19.0	-16.1	1077.7	-1078.8	166.5	156.4	7.6
14TH	185.50	46.7	-39.0	2427	2448	19.3	-15.9	1031.7	-1039.3	152.7	142.7	7.3
15TH	198.50	47.4	-38.6	2427	2448	19.6	-15.8	984.9	-1000.2	139.5	129.6	7.0
16TH	211.50	47.9	-39.9	2427	2448	19.7	-16.3	937.5	-961.6	126.7	117.1	6.7
17TH	224.50	48.2	-41.1	2427	2448	19.9	-16.8	889.6	-921.8	114.5	105.2	6.5
18TH	237.50	48.6	-42.3	2427	2448	20.0	-17.3	841.4	-880.7	102.8	93.9	6.2
19TH	250.50	49.0	-43.6	2427	2448	20.2	-17.8	792.7	-838.3	91.6	83.3	6.0
20TH	263.50	49.4	-44.8	2427	2448	20.3	-18.3	743.7	-794.8	81.0	73.3	5.7
21ST	276.50	49.8	-46.0	2427	2448	20.5	-18.8	694.4	-750.0	70.9	64.0	5.5
22ND	289.50	50.1	-47.3	2427	2448	20.7	-19.3	644.6	-704.0	61.5	55.3	5.3
23RD	302.50	50.6	-48.6	2427	2448	20.8	-19.9	594.5	-656.7	52.6	47.2	5.0
24TH	315.50	50.3	-50.8	2427	2448	20.7	-20.8	543.9	-608.1	44.4	39.8	4.8
25TH	328.50	49.9	-53.0	2427	2448	20.6	-21.6	493.6	-557.2	36.8	33.1	4.5
26TH	341.50	49.5	-55.2	2427	2448	20.4	-22.5	443.7	-504.2	29.9	27.0	4.2
27TH	354.50	49.1	-57.3	2427	2448	20.2	-23.4	394.2	-449.1	23.7	21.6	4.0
28TH	367.50	48.7	-59.5	2427	2448	20.1	-24.3	345.1	-391.8	18.3	16.7	3.6
29TH	380.50	48.4	-58.4	2427	2448	19.9	-23.9	296.4	-332.3	13.6	12.6	3.3
30TH	393.50	51.6	-56.6	2473	2637	20.9	-21.5	248.0	-273.9	9.6	9.0	3.1
31ST	407.50	58.6	-73.4	3173	3202	18.5	-22.9	196.4	-217.3	6.2	5.9	3.0
32ND	424.50	54.2	-65.4	3173	3018	17.1	-21.7	137.8	-143.9	3.1	3.1	2.6
33RD	441.50	39.4	-40.1	2297	2308	17.2	-17.4	83.6	-78.5	1.2	1.2	1.8
34TH	454.50	37.4	-21.4	2297	1181	16.3	-18.1	44.1	-38.4	.5	.4	.7
35TH	467.50	6.7	-17.1	433	704	15.5	-24.2	6.7	-17.1	.1	.0	.3

TABLE 7. SHEAR AND MOMENT DIAGRAMS : BASS BROTHERS OFFICE BUILDING - PHASE I, FT. WORTH
WIND DIRECTION 290 CONFIGURATION A REFERENCE PRESSURE 26.0 PSF GUST FACTOR 1.32

FLOOR	HEIGHT FT	X-FORCE KIPS	Y-FORCE KIPS	X-AREA SQ FT	Y-AREA SQ FT	X-PRESS PSF	Y-PRESS PSF	X-SHEAR KIPS	Y-SHEAR KIPS	X-MOMENT 1000-FT-KIPS	Y-MOMENT 1000-FT-KIPS	Z-MOMENT 1000-FT-KIPS
GRND	0.00	7.9	-60.4	2333	3000	3.4	-20.1	1198.6	-1694.3	428.2	306.1	27.8
2ND	20.00	32.0	-77.8	3938	3956	8.1	-19.7	1190.8	-1633.9	395.0	282.2	26.8
3RD	42.50	23.0	-41.6	2145	2329	10.7	-17.9	1158.8	-1556.1	359.1	255.8	24.7
4TH	55.50	27.0	-29.3	2145	2232	12.6	-13.1	1135.8	-1514.5	339.1	240.9	23.5
5TH	68.50	37.0	-30.2	2427	2123	15.3	-14.2	1108.8	-1485.2	319.6	226.3	21.9
6TH	81.50	28.6	-33.9	2427	2123	11.8	-16.0	1071.8	-1454.9	300.5	212.1	21.5
7TH	94.50	34.2	-38.2	2427	2448	14.1	-15.6	1043.2	-1421.0	281.8	198.3	21.2
8TH	107.50	22.8	-38.9	2427	2448	9.4	-15.9	1009.0	-1382.7	263.6	185.0	20.6
9TH	120.50	26.6	-39.1	2427	2448	11.0	-16.0	986.2	-1343.8	245.9	172.0	20.3
10TH	133.50	30.4	-39.3	2427	2448	12.5	-16.0	959.6	-1304.7	228.7	159.4	19.9
11TH	146.50	34.5	-39.7	2427	2448	14.2	-16.2	929.2	-1265.5	211.9	147.1	19.4
12TH	159.50	35.8	-40.3	2427	2448	14.8	-16.5	894.6	-1225.8	195.8	135.3	18.7
13TH	172.50	36.5	-41.0	2427	2448	15.1	-16.7	858.8	-1185.5	180.1	123.9	17.9
14TH	185.50	37.3	-41.6	2427	2448	15.4	-17.0	822.3	-1144.5	164.9	112.9	17.2
15TH	198.50	38.0	-42.3	2427	2448	15.7	-17.3	785.0	-1102.9	150.3	102.5	16.5
16TH	211.50	38.4	-44.2	2427	2448	15.8	-18.0	747.0	-1060.7	136.3	92.5	15.7
17TH	224.50	38.7	-46.1	2427	2448	16.0	-18.8	708.6	-1016.5	122.8	83.1	15.0
18TH	237.50	39.0	-47.9	2427	2448	16.1	-19.6	669.9	-970.4	109.8	74.1	14.3
19TH	250.50	39.4	-49.8	2427	2448	16.2	-20.3	630.9	-922.5	97.5	65.7	13.5
20TH	263.50	39.7	-51.7	2427	2448	16.3	-21.1	591.5	-872.6	85.9	57.7	12.8
21ST	276.50	40.0	-53.6	2427	2448	16.5	-21.9	551.8	-820.9	74.9	50.3	12.0
22ND	289.50	40.3	-55.5	2427	2448	16.6	-22.6	511.9	-767.4	64.5	43.4	11.2
23RD	302.50	40.6	-57.4	2427	2448	16.7	-23.5	471.6	-711.9	54.9	37.0	10.4
24TH	315.50	40.4	-59.1	2427	2448	16.7	-24.2	430.9	-654.5	46.0	31.1	9.6
25TH	328.50	40.2	-60.8	2427	2448	16.6	-24.8	390.5	-595.4	37.9	25.8	8.8
26TH	341.50	39.9	-62.5	2427	2448	16.4	-25.5	350.3	-534.5	30.6	20.9	8.0
27TH	354.50	39.6	-64.2	2427	2448	16.3	-26.2	310.4	-472.1	24.0	16.7	7.2
28TH	367.50	39.4	-65.8	2427	2448	16.2	-26.9	270.8	-407.9	18.3	12.9	6.4
29TH	380.50	39.0	-64.1	2427	2448	16.1	-26.2	231.4	-342.0	13.4	9.6	5.6
30TH	393.50	42.1	-61.5	2473	2637	17.0	-23.3	192.4	-278.0	9.4	6.9	4.9
31ST	407.50	46.3	-76.9	3173	3202	14.6	-24.0	150.3	-216.5	5.9	4.5	4.4
32ND	424.50	42.4	-66.4	3173	3018	13.3	-22.0	104.1	-139.6	2.9	2.3	3.5
33RD	441.50	29.6	-38.8	2297	2308	12.9	-16.8	61.7	-73.2	1.1	.9	2.5
34TH	454.50	27.2	-20.1	2297	1181	11.8	-17.0	32.1	-34.4	.4	.3	1.0
35TH	467.50	4.9	-14.3	433	704	11.4	-20.3	4.9	-14.3	.1	.0	.3

TABLE 7. SHEAR AND MOMENT DIAGRAMS : BASS BROTHERS OFFICE BUILDING - PHASE I, FT. WORTH
WIND DIRECTION 300 CONFIGURATION A REFERENCE PRESSURE 26.0 PSF GUST FACTOR 1.32

FLOOR	HEIGHT FT	X-FORCE KIPS	Y-FORCE KIPS	X-AREA SQ FT	Y-AREA SQ FT	X-PRESS PSF	Y-PRESS PSF	X-SHEAR KIPS	Y-SHEAR KIPS	X-MOMENT	Y-MOMENT	Z-MOMENT
										1000-FT-KIPS		
GRND	0.00	5.7	-52.5	2333	3000	2.4	-17.5	711.3	-1626.5	420.4	157.4	34.9
2ND	20.00	29.4	-64.3	3938	3956	7.5	-16.3	705.5	-1574.0	388.4	143.2	34.0
3RD	42.50	20.8	-35.9	2145	2329	9.7	-15.4	676.1	-1509.7	353.7	127.6	32.4
4TH	55.50	23.7	-27.3	2145	2232	11.0	-12.2	655.3	-1473.8	334.3	119.0	31.4
5TH	68.50	32.8	-29.4	2427	2123	13.5	-13.8	631.6	-1446.5	315.3	110.6	29.9
6TH	81.50	23.9	-31.3	2427	2123	9.9	-14.7	598.9	-1417.1	296.7	102.6	29.2
7TH	94.50	31.4	-33.3	2427	2448	13.0	-13.6	575.0	-1385.9	278.5	95.0	28.7
8TH	107.50	17.6	-33.9	2427	2448	7.2	-13.8	543.5	-1352.6	260.7	87.7	27.8
9TH	120.50	19.7	-34.3	2427	2448	8.1	-14.0	526.0	-1318.8	243.3	80.8	27.2
10TH	133.50	21.8	-34.8	2427	2448	9.0	-14.2	506.3	-1284.4	226.4	74.1	26.5
11TH	146.50	24.2	-35.6	2427	2448	10.0	-14.6	484.5	-1249.6	209.9	67.6	25.9
12TH	159.50	24.6	-37.3	2427	2448	10.1	-15.2	460.3	-1214.0	193.9	61.5	25.1
13TH	172.50	24.5	-39.0	2427	2448	10.1	-15.9	435.7	-1176.7	178.4	55.7	24.3
14TH	185.50	24.4	-40.7	2427	2448	10.1	-16.6	411.2	-1137.7	163.3	50.2	23.4
15TH	198.50	24.3	-42.4	2427	2448	10.0	-17.3	386.8	-1097.0	148.8	45.0	22.5
16TH	211.50	23.8	-44.3	2427	2448	9.8	-18.1	362.5	-1054.6	134.8	40.1	21.5
17TH	224.50	23.3	-46.2	2427	2448	9.6	-18.9	338.6	-1010.3	121.4	35.5	20.6
18TH	237.50	22.8	-48.0	2427	2448	9.4	-19.6	315.3	-964.1	108.5	31.3	19.6
19TH	250.50	22.3	-49.9	2427	2448	9.2	-20.4	292.4	-916.1	96.3	27.3	18.7
20TH	263.50	21.8	-51.8	2427	2448	9.0	-21.2	270.1	-866.2	84.7	23.7	17.8
21ST	276.50	21.3	-53.7	2427	2448	8.8	-21.9	248.3	-814.4	73.8	20.3	16.8
22ND	289.50	20.8	-55.5	2427	2448	8.6	-22.7	226.9	-760.7	63.6	17.2	15.9
23RD	302.50	20.4	-57.5	2427	2448	8.4	-23.5	206.1	-705.2	54.0	14.4	14.9
24TH	315.50	20.1	-59.2	2427	2448	8.3	-24.2	185.7	-647.7	45.3	11.9	14.0
25TH	328.50	19.8	-60.8	2427	2448	8.2	-24.8	165.6	-588.5	37.2	9.6	13.0
26TH	341.50	19.5	-62.4	2427	2448	8.0	-25.5	145.8	-527.7	30.0	7.6	12.0
27TH	354.50	19.2	-64.0	2427	2448	7.9	-26.2	126.3	-465.3	23.5	5.8	10.9
28TH	367.50	18.9	-65.7	2427	2448	7.8	-26.8	107.2	-401.2	17.9	4.3	9.8
29TH	380.50	18.5	-63.7	2427	2448	7.6	-26.0	88.3	-335.5	13.1	3.0	8.7
30TH	393.50	19.6	-60.7	2473	2637	7.9	-23.0	69.8	-271.8	9.1	2.0	7.7
31ST	407.50	20.7	-75.8	3173	3202	6.5	-23.7	50.2	-211.1	5.8	1.1	6.8
32ND	424.50	18.0	-64.7	3173	3018	5.7	-21.5	29.4	-135.3	2.8	.5	5.6
33RD	441.50	8.6	-37.0	2297	2308	3.7	-16.0	11.5	-70.6	1.1	.1	4.0
34TH	454.50	3.2	-20.6	2297	1181	1.4	-17.4	2.9	-33.6	.4	.0	2.0
35TH	467.50	-.4	-13.1	433	704	-.8	-18.6	-.4	-13.1	.1	-.0	.4

TABLE 7. SHEAR AND MOMENT DIAGRAMS : BASS BROTHERS OFFICE BUILDING - PHASE I, FT. WORTH
WIND DIRECTION 310 CONFIGURATION A REFERENCE PRESSURE 26.0 PSF GUST FACTOR 1.32

FLOOR	HEIGHT FT	X-FORCE KIPS	Y-FORCE KIPS	X-AREA SQ FT	Y-AREA SQ FT	X-PRESS PSF	Y-PRESS PSF	X-SHEAR KIPS	Y-SHEAR KIPS	X-MOMENT	Y-MOMENT 1000-FT-KIPS	Z-MOMENT
GRND	0.00	1.1	-53.2	2333	3000	.5	-17.7	283.2	-1798.6	456.3	38.1	34.2
2ND	20.00	23.9	-65.7	3938	3956	6.1	-16.6	282.1	-1745.3	420.9	32.5	33.0
3RD	42.50	14.2	-37.1	2145	2329	6.6	-15.9	258.2	-1679.6	382.4	26.4	31.7
4TH	55.50	16.6	-31.7	2145	2232	7.7	-14.2	243.9	-1642.5	360.8	23.1	31.0
5TH	68.50	27.0	-36.7	2427	2123	11.1	-17.3	227.4	-1610.8	339.6	20.1	29.4
6TH	81.50	16.2	-38.5	2427	2123	6.7	-18.1	200.4	-1574.0	318.9	17.3	28.5
7TH	94.50	21.6	-43.2	2427	2448	8.9	-17.6	184.2	-1535.5	298.7	14.8	27.7
8TH	107.50	1.3	-43.2	2427	2448	.5	-17.6	162.6	-1492.4	279.0	12.5	26.8
9TH	120.50	5.0	-42.7	2427	2448	2.1	-17.4	161.3	-1449.2	259.9	10.4	26.4
10TH	133.50	8.7	-42.2	2427	2448	3.6	-17.2	156.3	-1406.5	241.3	8.4	25.9
11TH	146.50	11.6	-42.4	2427	2448	4.8	-17.3	147.5	-1364.3	223.3	6.4	25.4
12TH	159.50	12.6	-44.4	2427	2448	5.2	-18.1	135.9	-1321.9	205.9	4.6	24.9
13TH	172.50	13.2	-46.4	2427	2448	5.5	-18.9	123.3	-1277.5	189.0	2.9	24.2
14TH	185.50	13.9	-48.3	2427	2448	5.7	-19.7	110.1	-1231.2	172.7	1.4	23.4
15TH	198.50	14.5	-50.3	2427	2448	6.0	-20.6	96.2	-1182.9	157.0	.0	22.6
16TH	211.50	13.8	-51.9	2427	2448	5.7	-21.2	81.8	-1132.5	141.9	-1.1	21.7
17TH	224.50	13.1	-53.5	2427	2448	5.4	-21.8	67.9	-1080.6	127.5	-2.1	20.8
18TH	237.50	12.3	-55.0	2427	2448	5.1	-22.5	54.9	-1027.1	113.8	-2.9	19.9
19TH	250.50	11.6	-56.5	2427	2448	4.8	-23.1	42.5	-972.1	100.9	-3.5	19.1
20TH	263.50	10.8	-58.1	2427	2448	4.5	-23.7	30.9	-915.6	88.6	-4.0	18.3
21ST	276.50	10.1	-59.6	2427	2448	4.2	-24.4	20.1	-857.5	77.1	-4.4	17.6
22ND	289.50	9.4	-61.2	2427	2448	3.9	-25.0	10.0	-797.9	66.3	-4.5	16.9
23RD	302.50	8.6	-62.8	2427	2448	3.6	-25.6	.6	-736.7	56.3	-4.6	16.2
24TH	315.50	7.6	-63.5	2427	2448	3.1	-25.9	-8.0	-674.0	47.2	-4.6	15.5
25TH	328.50	6.4	-64.2	2427	2448	2.7	-26.2	-15.6	-610.4	38.8	-4.4	14.8
26TH	341.50	5.3	-65.0	2427	2448	2.2	-26.5	-22.0	-546.2	31.3	-4.2	14.0
27TH	354.50	4.2	-65.7	2427	2448	1.7	-26.8	-27.4	-481.3	24.6	-3.8	13.0
28TH	367.50	3.1	-66.4	2427	2448	1.3	-27.1	-31.5	-415.6	18.8	-3.5	12.0
29TH	380.50	2.7	-64.0	2427	2448	1.1	-26.1	-34.6	-349.2	13.8	-3.0	10.8
30TH	393.50	2.4	-61.2	2473	2637	1.0	-23.2	-37.3	-285.2	9.7	-2.6	9.6
31ST	407.50	1.2	-79.3	3173	3202	.4	-24.8	-39.7	-224.0	6.1	-2.0	8.5
32ND	424.50	-3.4	-69.0	3173	3018	-1.1	-22.9	-40.8	-144.7	3.0	-1.3	7.1
33RD	441.50	-11.0	-40.9	2297	2308	-4.8	-17.7	-37.5	-75.8	1.1	-.7	5.2
34TH	454.50	-19.2	-22.3	2297	1181	-8.4	-18.8	-26.5	-34.8	.4	-.3	2.9
35TH	467.50	-7.2	-12.6	433	704	-16.7	-17.9	-7.2	-12.6	.1	-.0	.5

TABLE 7. SHEAR AND MOMENT DIAGRAMS : BASS BROTHERS OFFICE BUILDING - PHASE I, FT. WORTH
WIND DIRECTION 320 CONFIGURATION A REFERENCE PRESSURE 26.0 PSF GUST FACTOR 1.32

FLOOR	HEIGHT FT	X-FORCE KIPS	Y-FORCE KIPS	X-AREA SQ FT	Y-AREA SQ FT	X-PRESS PSF	Y-PRESS PSF	X-SHEAR KIPS	Y-SHEAR KIPS	X-MOMENT 1000-FT-KIPS	Y-MOMENT 1000-FT-KIPS	Z-MOMENT 1000-FT-KIPS
GRND	0.00	-12.8	-52.1	2333	3000	-5.5	-17.4	-108.4	-1898.0	475.9	-52.9	20.2
2ND	20.00	.4	-68.8	3938	3956	.1	-17.4	-95.6	-1845.9	438.5	-50.9	18.9
3RD	42.50	-.8	-41.6	2145	2329	-.4	-17.9	-96.0	-1777.1	397.7	-48.7	17.5
4TH	55.50	5.3	-36.8	2145	2232	2.5	-16.5	-95.2	-1735.4	374.9	-47.5	16.8
5TH	68.50	21.9	-39.8	2427	2123	9.0	-18.8	-100.5	-1698.6	352.6	-46.2	15.5
6TH	81.50	3.9	-40.6	2427	2123	1.6	-19.1	-122.5	-1658.8	330.7	-44.8	15.0
7TH	94.50	8.4	-47.6	2427	2448	3.5	-19.4	-126.4	-1618.2	309.4	-43.1	14.6
8TH	107.50	-12.6	-47.5	2427	2448	-5.2	-19.4	-134.9	-1570.6	288.7	-41.4	14.0
9TH	120.50	-8.8	-47.0	2427	2448	-3.6	-19.2	-122.3	-1523.1	268.6	-39.8	13.9
10TH	133.50	-5.1	-46.6	2427	2448	-2.1	-19.0	-113.5	-1476.1	249.1	-38.2	13.9
11TH	146.50	-2.8	-46.8	2427	2448	-1.2	-19.1	-108.4	-1429.5	230.2	-36.8	13.9
12TH	159.50	-1.1	-49.0	2427	2448	-.5	-20.0	-105.6	-1382.6	211.9	-35.4	14.0
13TH	172.50	.5	-51.1	2427	2448	.2	-20.9	-104.5	-1333.7	194.3	-34.0	13.9
14TH	185.50	2.1	-53.2	2427	2448	.9	-21.7	-104.9	-1282.5	177.3	-32.7	13.8
15TH	198.50	3.7	-55.4	2427	2448	1.5	-22.6	-107.0	-1229.3	160.9	-31.3	13.7
16TH	211.50	3.6	-56.8	2427	2448	1.5	-23.2	-110.7	-1173.9	145.3	-29.9	13.5
17TH	224.50	3.5	-58.1	2427	2448	1.4	-23.8	-114.3	-1117.1	130.4	-28.4	13.3
18TH	237.50	3.3	-59.5	2427	2448	1.4	-24.3	-117.8	-1059.0	116.3	-26.9	13.0
19TH	250.50	3.2	-60.8	2427	2448	1.3	-24.8	-121.1	-999.5	102.9	-25.4	12.8
20TH	263.50	3.1	-62.2	2427	2448	1.3	-25.4	-124.3	-938.7	90.3	-23.8	12.6
21ST	276.50	2.9	-63.5	2427	2448	1.2	-25.9	-127.4	-876.5	78.5	-22.1	12.5
22ND	289.50	2.8	-64.9	2427	2448	1.2	-26.5	-130.3	-813.0	67.5	-20.5	12.3
23RD	302.50	2.7	-66.2	2427	2448	1.1	-27.1	-133.1	-748.1	57.4	-18.7	12.1
24TH	315.50	1.3	-66.0	2427	2448	.5	-26.9	-135.8	-681.9	48.1	-17.0	11.9
25TH	328.50	-.1	-65.6	2427	2448	-.1	-26.8	-137.1	-615.9	39.7	-15.2	11.7
26TH	341.50	-1.6	-65.3	2427	2448	-.7	-26.7	-137.0	-550.3	32.1	-13.4	11.3
27TH	354.50	-3.1	-65.0	2427	2448	-1.3	-26.5	-135.4	-485.0	25.3	-11.7	10.8
28TH	367.50	-4.5	-64.7	2427	2448	-1.9	-26.4	-132.3	-420.0	19.5	-9.9	10.1
29TH	380.50	-5.5	-61.8	2427	2448	-2.3	-25.2	-127.8	-355.3	14.4	-8.2	9.4
30TH	393.50	-6.7	-59.2	2473	2637	-2.7	-22.5	-122.2	-293.6	10.2	-6.6	8.6
31ST	407.50	-10.8	-79.0	3173	3202	-3.4	-24.7	-115.5	-234.4	6.5	-5.0	8.0
32ND	424.50	-19.5	-72.4	3173	3018	-6.2	-24.0	-104.7	-155.4	3.2	-3.1	7.0
33RD	441.50	-28.9	-46.7	2297	2308	-12.6	-20.2	-85.2	-82.9	1.2	-1.5	5.7
34TH	454.50	-42.2	-24.1	2297	1181	-18.4	-20.4	-56.3	-36.2	.4	-.5	3.4
35TH	467.50	-14.1	-12.2	433	704	-32.5	-17.3	-14.1	-12.2	.1	-.1	.6

TABLE 7. SHEAR AND MOMENT DIAGRAMS : BASS BROTHERS OFFICE BUILDING - PHASE I, FT. WORTH
WIND DIRECTION 330 CONFIGURATION A REFERENCE PRESSURE 26.0 PSF GUST FACTOR 1.32

FLOOR	HEIGHT FT	X-FORCE KIPS	Y-FORCE KIPS	X-AREA SQ FT	Y-AREA SQ FT	X-PRESS PSF	Y-PRESS PSF	X-SHEAR KIPS	Y-SHEAR KIPS	X-MOMENT 1000-FT-KIPS	Y-MOMENT 1000-FT-KIPS	Z-MOMENT 1000-FT-KIPS
GRND	0.00	-23.6	-56.0	2333	3000	-10.1	-18.7	-425.2	-2189.4	537.8	-111.0	4.5
2ND	20.00	-26.2	-83.9	3938	3956	-6.7	-21.2	-401.6	-2133.4	494.6	-102.7	3.3
3RD	42.50	-13.6	-52.9	2145	2329	-6.3	-22.7	-375.4	-2049.6	447.5	-93.9	1.3
4TH	55.50	-6.9	-49.3	2145	2232	-3.2	-22.1	-361.8	-1996.6	421.2	-89.2	.4
5TH	68.50	9.4	-49.9	2427	2123	3.9	-23.5	-354.9	-1947.3	395.6	-84.5	-.7
6TH	81.50	-11.7	-50.6	2427	2123	-4.8	-23.8	-364.2	-1897.4	370.6	-79.8	-1.1
7TH	94.50	-6.5	-58.5	2427	2448	-2.7	-23.9	-352.5	-1846.8	346.2	-75.2	-1.4
8TH	107.50	-19.8	-58.6	2427	2448	-8.2	-23.9	-346.0	-1788.4	322.6	-70.6	-1.7
9TH	120.50	-17.9	-58.6	2427	2448	-7.4	-23.9	-326.2	-1729.8	299.7	-66.3	-1.6
10TH	133.50	-15.9	-58.7	2427	2448	-6.6	-24.0	-308.3	-1671.2	277.6	-62.1	-1.4
11TH	146.50	-15.5	-59.1	2427	2448	-6.4	-24.1	-292.4	-1612.5	256.3	-58.2	-1.0
12TH	159.50	-13.8	-60.5	2427	2448	-5.7	-24.7	-276.9	-1553.4	235.7	-54.5	-.5
13TH	172.50	-12.0	-61.8	2427	2448	-4.9	-25.3	-263.1	-1493.0	215.9	-51.0	.0
14TH	185.50	-10.2	-63.2	2427	2448	-4.2	-25.8	-251.2	-1431.2	196.9	-47.7	.6
15TH	198.50	-8.3	-64.6	2427	2448	-3.4	-26.4	-241.0	-1368.0	178.7	-44.5	1.1
16TH	211.50	-7.8	-65.5	2427	2448	-3.2	-26.8	-232.7	-1303.4	161.3	-41.4	1.7
17TH	224.50	-7.3	-66.3	2427	2448	-3.0	-27.1	-224.9	-1237.9	144.8	-38.4	2.2
18TH	237.50	-6.8	-67.1	2427	2448	-2.8	-27.4	-217.6	-1171.6	129.2	-35.5	2.8
19TH	250.50	-6.3	-68.0	2427	2448	-2.6	-27.8	-210.9	-1104.4	114.4	-32.8	3.3
20TH	263.50	-5.8	-68.8	2427	2448	-2.4	-28.1	-204.6	-1036.5	100.5	-30.1	3.8
21ST	276.50	-5.3	-69.6	2427	2448	-2.2	-28.4	-198.8	-967.7	87.4	-27.4	4.3
22ND	289.50	-4.8	-70.5	2427	2448	-2.0	-28.8	-193.6	-898.0	75.3	-24.9	4.8
23RD	302.50	-4.3	-71.3	2427	2448	-1.8	-29.1	-188.8	-827.6	64.1	-22.4	5.2
24TH	315.50	-5.2	-71.3	2427	2448	-2.2	-29.1	-184.5	-756.3	53.8	-20.0	5.7
25TH	328.50	-6.3	-71.3	2427	2448	-2.6	-29.1	-179.3	-684.9	44.4	-17.6	6.0
26TH	341.50	-7.4	-71.3	2427	2448	-3.1	-29.1	-173.0	-613.6	36.0	-15.3	6.3
27TH	354.50	-8.5	-71.3	2427	2448	-3.5	-29.1	-165.5	-542.3	28.5	-13.1	6.4
28TH	367.50	-9.6	-71.3	2427	2448	-4.0	-29.1	-157.0	-471.0	21.9	-11.0	6.5
29TH	380.50	-9.6	-69.4	2427	2448	-3.9	-28.3	-147.4	-399.8	16.2	-9.0	6.4
30TH	393.50	-10.7	-69.5	2473	2637	-4.3	-26.4	-137.8	-330.4	11.5	-7.2	6.3
31ST	407.50	-13.9	-87.1	3173	3202	-4.4	-27.2	-127.2	-260.9	7.3	-5.3	6.3
32ND	424.50	-21.8	-78.8	3173	3018	-6.9	-26.1	-113.2	-173.8	3.6	-3.3	6.2
33RD	441.50	-31.6	-53.0	2297	2308	-13.8	-23.0	-91.5	-95.0	1.4	-1.5	5.5
34TH	454.50	-46.4	-27.5	2297	1181	-20.2	-23.3	-59.8	-42.0	.5	-.6	3.5
35TH	467.50	-13.5	-14.5	433	704	-31.1	-20.6	-13.5	-14.5	.1	-.1	.6

TABLE 7. SHEAR AND MOMENT DIAGRAMS : BASS BROTHERS OFFICE BUILDING - PHASE I, FT. WORTH
WIND DIRECTION 340 CONFIGURATION A REFERENCE PRESSURE 26.0 PSF GUST FACTOR 1.32

FLOOR	HEIGHT FT	X-FORCE KIPS	Y-FORCE KIPS	X-AREA SQ FT	Y-AREA SQ FT	X-PRESS PSF	Y-PRESS PSF	X-SHEAR KIPS	Y-SHEAR KIPS	X-MOMENT	Y-MOMENT 1000-FT-KIPS	Z-MOMENT
GRND	0.00	-42.5	-69.6	2333	3000	-18.2	-23.2	-1007.2	-2494.6	603.7	-239.5	6.7
2ND	20.00	-55.1	-100.9	3938	3956	-14.0	-25.5	-964.7	-2425.0	554.5	-219.8	5.5
3RD	42.50	-27.9	-64.2	2145	2329	-13.0	-27.6	-909.6	-2324.1	501.1	-198.7	2.8
4TH	55.50	-22.2	-61.1	2145	2232	-10.4	-27.4	-881.7	-2259.9	471.3	-187.1	1.6
5TH	68.50	-11.8	-59.7	2427	2123	-4.9	-28.1	-859.5	-2198.8	442.3	-175.8	.3
6TH	81.50	-27.9	-60.4	2427	2123	-11.5	-28.4	-847.7	-2139.1	414.1	-164.7	-.7
7TH	94.50	-22.0	-69.1	2427	2448	-9.0	-28.2	-819.8	-2078.7	386.7	-153.8	-1.4
8TH	107.50	-30.9	-68.8	2427	2448	-12.7	-28.1	-797.8	-2009.6	360.1	-143.3	-2.1
9TH	120.50	-31.3	-68.6	2427	2448	-12.9	-28.0	-766.9	-1940.8	334.4	-133.1	-2.4
10TH	133.50	-31.6	-68.4	2427	2448	-13.0	-27.9	-735.7	-1872.2	309.7	-123.4	-2.5
11TH	146.50	-32.8	-68.5	2427	2448	-13.5	-28.0	-704.0	-1803.9	285.8	-114.0	-2.4
12TH	159.50	-32.5	-69.6	2427	2448	-13.4	-28.4	-671.3	-1735.4	262.8	-105.1	-2.2
13TH	172.50	-32.1	-70.6	2427	2448	-13.2	-28.8	-638.8	-1665.8	240.6	-96.6	-1.9
14TH	185.50	-31.7	-71.7	2427	2448	-13.0	-29.3	-606.7	-1595.2	219.4	-88.5	-1.6
15TH	198.50	-31.3	-72.7	2427	2448	-12.9	-29.7	-575.1	-1523.5	199.2	-80.8	-1.2
16TH	211.50	-30.3	-73.5	2427	2448	-12.5	-30.0	-543.8	-1450.8	179.8	-73.5	-.9
17TH	224.50	-29.3	-74.2	2427	2448	-12.1	-30.3	-513.5	-1377.3	161.5	-66.6	-.4
18TH	237.50	-28.3	-74.8	2427	2448	-11.7	-30.6	-484.2	-1303.1	144.0	-60.1	.1
19TH	250.50	-27.3	-75.5	2427	2448	-11.3	-30.8	-455.9	-1228.3	127.6	-54.0	.6
20TH	263.50	-26.3	-76.2	2427	2448	-10.8	-31.1	-428.6	-1152.8	112.1	-48.3	1.2
21ST	276.50	-25.3	-76.8	2427	2448	-10.4	-31.4	-402.3	-1076.6	97.6	-42.9	1.8
22ND	289.50	-24.3	-77.5	2427	2448	-10.0	-31.7	-376.9	-999.8	84.1	-37.8	2.6
23RD	302.50	-23.3	-78.2	2427	2448	-9.6	-32.0	-352.6	-922.2	71.6	-33.1	3.3
24TH	315.50	-23.5	-78.6	2427	2448	-9.7	-32.1	-329.3	-844.0	60.1	-28.6	4.1
25TH	328.50	-23.8	-78.9	2427	2448	-9.8	-32.2	-305.8	-765.4	49.7	-24.5	4.8
26TH	341.50	-24.2	-79.2	2427	2448	-10.0	-32.3	-281.9	-686.6	40.2	-20.7	5.4
27TH	354.50	-24.5	-79.5	2427	2448	-10.1	-32.5	-257.8	-607.4	31.8	-17.2	5.8
28TH	367.50	-24.9	-79.8	2427	2448	-10.2	-32.6	-233.3	-527.9	24.5	-14.0	6.1
29TH	380.50	-23.1	-78.1	2427	2448	-9.5	-31.9	-208.4	-448.1	18.1	-11.1	6.3
30TH	393.50	-25.3	-79.0	2473	2637	-10.2	-30.0	-185.3	-369.9	12.8	-8.6	6.2
31ST	407.50	-28.1	-97.7	3173	3202	-8.9	-30.5	-159.9	-291.0	8.2	-6.2	6.4
32ND	424.50	-30.4	-86.9	3173	3018	-9.6	-28.8	-131.8	-193.3	4.1	-3.7	6.4
33RD	441.50	-36.3	-59.9	2297	2308	-15.8	-26.0	-101.4	-106.4	1.5	-1.7	5.5
34TH	454.50	-50.9	-30.2	2297	1181	-22.1	-25.5	-65.2	-46.5	.5	-.6	3.6
35TH	467.50	-14.3	-16.4	433	704	-33.0	-23.2	-14.3	-16.4	.1	-.1	.6

TABLE 7. SHEAR AND MOMENT DIAGRAMS : BASS BROTHERS OFFICE BUILDING - PHASE I, FT. WORTH
WIND DIRECTION 350 CONFIGURATION A REFERENCE PRESSURE 26.0 PSF GUST FACTOR 1.32

FLOOR	HEIGHT FT	X-FORCE KIPS	Y-FORCE KIPS	X-AREA SQ FT	Y-AREA SQ FT	X-PRESS PSF	Y-PRESS PSF	X-SHEAR KIPS	Y-SHEAR KIPS	X-MOMENT	Y-MOMENT 1000-FT-KIPS	Z-MOMENT
GRND	0.00	-62.5	-74.1	2333	3000	-26.8	-24.7	-1649.7	-2678.9	651.0	-394.6	23.9
2ND	20.00	-78.9	-110.1	3938	3956	-20.0	-27.8	-1587.2	-2604.8	598.1	-362.2	22.8
3RD	42.50	-38.3	-70.1	2145	2329	-17.9	-30.1	-1508.4	-2494.7	540.8	-327.4	19.5
4TH	55.50	-34.4	-66.8	2145	2232	-16.0	-29.9	-1470.0	-2424.6	508.8	-308.0	18.0
5TH	68.50	-30.1	-63.1	2427	2123	-12.4	-29.7	-1435.6	-2357.8	477.7	-289.2	16.5
6TH	81.50	-43.3	-64.0	2427	2123	-17.8	-30.1	-1405.5	-2294.8	447.5	-270.7	15.1
7TH	94.50	-35.3	-74.8	2427	2448	-14.5	-30.6	-1362.3	-2230.7	418.0	-252.7	13.9
8TH	107.50	-45.1	-74.2	2427	2448	-18.6	-30.3	-1327.0	-2155.9	389.5	-235.2	12.6
9TH	120.50	-46.4	-73.5	2427	2448	-19.1	-30.0	-1281.9	-2081.7	362.0	-218.3	11.7
10TH	133.50	-47.6	-72.8	2427	2448	-19.6	-29.7	-1235.5	-2008.2	335.4	-201.9	11.1
11TH	146.50	-49.9	-72.5	2427	2448	-20.6	-29.6	-1187.8	-1935.4	309.8	-186.2	10.7
12TH	159.50	-50.4	-73.7	2427	2448	-20.8	-30.1	-1138.0	-1862.9	285.1	-171.0	10.6
13TH	172.50	-50.8	-74.8	2427	2448	-20.9	-30.6	-1087.6	-1789.2	261.3	-156.6	10.5
14TH	185.50	-51.2	-76.0	2427	2448	-21.1	-31.0	-1036.8	-1714.4	238.6	-142.8	10.4
15TH	198.50	-51.6	-77.1	2427	2448	-21.2	-31.5	-985.6	-1638.4	216.8	-129.6	10.4
16TH	211.50	-51.3	-77.9	2427	2448	-21.1	-31.8	-934.1	-1561.3	196.0	-117.1	10.4
17TH	224.50	-50.9	-78.6	2427	2448	-21.0	-32.1	-882.8	-1483.4	176.2	-105.3	10.5
18TH	237.50	-50.6	-79.4	2427	2448	-20.9	-32.4	-831.9	-1404.8	157.4	-94.2	10.6
19TH	250.50	-50.3	-80.1	2427	2448	-20.7	-32.7	-781.3	-1325.4	139.7	-83.7	10.7
20TH	263.50	-50.0	-80.9	2427	2448	-20.6	-33.0	-731.0	-1245.3	123.0	-73.9	10.8
21ST	276.50	-49.6	-81.6	2427	2448	-20.5	-33.3	-681.0	-1164.4	107.3	-64.7	10.9
22ND	289.50	-49.3	-82.3	2427	2448	-20.3	-33.6	-631.4	-1082.8	92.7	-56.2	11.1
23RD	302.50	-48.9	-83.1	2427	2448	-20.1	-34.0	-582.1	-1000.5	79.1	-48.3	11.3
24TH	315.50	-48.2	-83.4	2427	2448	-19.9	-34.1	-533.2	-917.3	66.7	-41.0	11.5
25TH	328.50	-47.7	-83.7	2427	2448	-19.7	-34.2	-485.0	-833.9	55.3	-34.4	11.5
26TH	341.50	-47.2	-83.9	2427	2448	-19.4	-34.3	-437.3	-750.2	45.0	-28.4	11.4
27TH	354.50	-46.7	-84.2	2427	2448	-19.2	-34.4	-390.1	-666.3	35.8	-23.0	11.1
28TH	367.50	-46.1	-84.4	2427	2448	-19.0	-34.5	-343.5	-582.1	27.7	-18.3	10.7
29TH	380.50	-43.0	-82.9	2427	2448	-17.7	-33.9	-297.3	-497.7	20.7	-14.1	10.2
30TH	393.50	-45.9	-84.6	2473	2637	-18.6	-32.1	-254.4	-414.8	14.7	-10.5	9.3
31ST	407.50	-50.3	-105.6	3173	3202	-15.9	-33.0	-208.4	-330.2	9.5	-7.3	8.6
32ND	424.50	-45.1	-97.8	3173	3018	-14.2	-32.4	-158.1	-224.6	4.8	-4.2	7.5
33RD	441.50	-42.0	-71.1	2297	2308	-18.3	-30.8	-113.0	-126.9	1.8	-1.9	5.8
34TH	454.50	-56.3	-35.7	2297	1181	-24.5	-30.3	-71.1	-55.8	.6	-.7	3.8
35TH	467.50	-14.8	-20.1	433	704	-34.1	-28.5	-14.8	-20.1	.1	-.1	.7

TABLE 7. SHEAR AND MOMENT DIAGRAMS : BASS BROTHERS OFFICE BUILDING - PHASE II, FT. WORTH

WIND DIRECTION 0 CONFIGURATION C REFERENCE PRESSURE 26.0 PSF GUST FACTOR 1.32

FLOOR	HEIGHT FT	X-FORCE KIPS	Y-FORCE KIPS	X-AREA SQ FT	Y-AREA SQ FT	X-PRESS PSF	Y-PRESS PSF	X-SHEAR KIPS	Y-SHEAR KIPS	X-MOMENT 1000-FT-KIPS	Y-MOMENT 1000-FT-KIPS	Z-MOMENT 1000-FT-KIPS
GRND	0.00	-53.0	25.0	3240	3060	-16.4	8.2	-1935.3	635.1	-171.4	-495.3	-22.0
2ND	18.00	-45.2	15.3	2700	3050	-16.7	5.0	-1882.3	610.1	-160.2	-460.9	-20.9
3RD	33.00	-43.4	18.9	3600	4067	-12.0	4.6	-1837.1	594.8	-151.2	-433.0	-20.3
4TH	53.00	-38.2	23.1	2340	2448	-16.3	9.4	-1793.8	575.9	-139.5	-396.7	-20.0
5TH	66.00	-35.6	22.0	2340	2448	-15.2	9.0	-1755.5	552.8	-132.1	-373.7	-19.3
6TH	79.00	-33.0	20.8	2340	2448	-14.1	8.5	-1719.9	530.8	-125.1	-351.1	-18.3
7TH	92.00	-45.1	19.3	2427	2448	-18.6	7.9	-1687.0	510.0	-118.3	-328.9	-17.1
8TH	105.00	-47.7	15.5	2427	2448	-19.7	6.3	-1641.9	490.7	-111.8	-307.3	-16.4
9TH	118.00	-50.3	11.6	2427	2448	-20.7	4.7	-1594.2	475.3	-105.5	-286.3	-15.8
10TH	131.00	-52.9	7.7	2427	2448	-21.8	3.2	-1543.9	463.7	-99.4	-265.9	-15.3
11TH	144.00	-55.5	3.9	2427	2448	-22.9	1.6	-1491.0	455.9	-93.5	-246.1	-14.8
12TH	157.00	-58.1	.1	2427	2448	-23.9	.0	-1435.5	452.0	-87.6	-227.1	-14.5
13TH	170.00	-60.0	3.0	2427	2448	-24.7	1.2	-1377.5	451.9	-81.7	-208.8	-14.2
14TH	183.00	-62.0	6.2	2427	2448	-25.5	2.6	-1317.5	448.9	-75.8	-191.3	-13.8
15TH	196.00	-62.9	9.5	2427	2448	-25.9	3.9	-1255.5	442.6	-70.0	-174.6	-13.4
16TH	209.00	-61.8	12.5	2427	2448	-25.5	5.1	-1192.6	433.2	-64.3	-158.7	-13.0
17TH	222.00	-60.7	15.5	2427	2448	-25.0	6.4	-1130.7	420.7	-58.8	-143.6	-12.5
18TH	235.00	-59.6	18.6	2427	2448	-24.6	7.6	-1070.0	405.1	-53.4	-129.3	-12.0
19TH	248.00	-58.7	20.9	2427	2448	-24.2	8.6	-1010.4	386.5	-48.3	-115.7	-11.5
20TH	261.00	-58.5	20.9	2427	2448	-24.1	8.5	-951.7	365.6	-43.4	-103.0	-10.9
21ST	274.00	-58.3	20.8	2427	2448	-24.0	8.5	-893.2	344.7	-38.8	-91.0	-10.3
22ND	287.00	-58.1	20.8	2427	2448	-23.9	8.5	-834.9	323.9	-34.4	-79.8	-9.6
23RD	300.00	-57.9	20.7	2427	2448	-23.8	8.5	-776.9	303.1	-30.3	-69.3	-8.9
24TH	313.00	-57.6	20.7	2427	2448	-23.8	8.4	-719.0	282.3	-26.5	-59.6	-8.3
25TH	326.00	-57.4	20.6	2427	2448	-23.7	8.4	-661.3	261.7	-23.0	-50.6	-7.6
26TH	339.00	-57.2	20.6	2427	2448	-23.6	8.4	-603.9	241.0	-19.7	-42.4	-6.8
27TH	352.00	-57.2	20.2	2427	2448	-23.6	8.2	-546.7	220.4	-16.7	-34.9	-6.1
28TH	365.00	-57.5	19.3	2427	2448	-23.7	7.9	-489.5	200.2	-14.0	-28.2	-5.4
29TH	378.00	-57.8	18.4	2427	2448	-23.8	7.5	-432.0	181.0	-11.5	-22.2	-4.8
30TH	391.00	-58.0	17.5	2427	2448	-23.9	7.1	-374.2	162.6	-9.3	-16.9	-4.3
31ST	404.00	-58.3	16.6	2427	2448	-24.0	6.8	-316.2	145.1	-7.3	-12.4	-4.0
32ND	417.00	-58.6	19.1	2427	2448	-24.1	7.8	-257.9	128.6	-5.5	-8.7	-3.8
33RD	430.00	-59.9	19.0	2613	2287	-22.9	8.3	-199.3	109.4	-4.0	-5.7	-3.7
34TH	444.00	-63.7	29.3	3173	2777	-20.1	10.6	-139.4	90.4	-2.6	-3.4	-3.0
35TH	461.00	-35.6	27.6	2975	3202	-12.0	8.6	-75.7	61.1	-1.3	-1.5	-1.9
36TH	478.00	-23.1	18.3	2275	2340	-10.2	7.0	-40.1	33.5	-.5	-.6	-.9
37TH	491.00	-11.3	14.6	1170	2340	-9.7	6.2	-17.0	17.2	-.1	-.2	-.5
38TH	504.00	-5.6	2.6	693	433	-8.1	5.9	-5.6	2.6	-.0	-.0	-.1

TABLE 7. SHEAR AND MOMENT DIAGRAMS : BASS BROTHERS OFFICE BUILDING - PHASE II, FT. WORTH
WIND DIRECTION 10 CONFIGURATION C REFERENCE PRESSURE 26.0 PSF GUST FACTOR 1.32

FLOOR	HEIGHT FT	X-FORCE KIPS	Y-FORCE KIPS	X-AREA SQ FT	Y-AREA SQ FT	X-PRESS PSF	Y-PRESS PSF	X-SHEAR KIPS	Y-SHEAR KIPS	X-MOMENT 1000-FT-KIPS	Y-MOMENT 1000-FT-KIPS	Z-MOMENT 1000-FT-KIPS
GRND	0.00	-59.3	33.4	3240	3060	-18.3	10.9	-1910.3	1194.8	-301.8	-478.9	-11.8
2ND	18.00	-49.9	30.3	2700	3050	-18.5	9.9	-1851.0	1161.4	-280.6	-445.0	-10.6
3RD	33.00	-47.3	38.5	3600	4067	-13.1	9.5	-1801.1	1131.2	-263.4	-417.6	-10.2
4TH	53.00	-38.0	37.3	2340	2448	-16.2	15.2	-1753.8	1092.6	-241.1	-382.1	-9.9
5TH	66.00	-37.2	35.8	2340	2448	-15.9	14.6	-1715.8	1055.3	-227.2	-359.5	-9.3
6TH	79.00	-36.4	34.4	2340	2448	-15.6	14.0	-1678.5	1019.5	-213.7	-337.5	-8.6
7TH	92.00	-47.0	33.0	2427	2448	-19.4	13.5	-1642.1	985.2	-200.7	-315.9	-7.8
8TH	105.00	-49.1	32.2	2427	2448	-20.3	13.2	-1595.1	952.2	-188.1	-294.8	-7.4
9TH	118.00	-51.3	31.5	2427	2448	-21.1	12.9	-1545.9	920.0	-175.9	-274.4	-7.1
10TH	131.00	-53.4	30.7	2427	2448	-22.0	12.6	-1494.7	888.5	-164.1	-254.7	-6.7
11TH	144.00	-55.5	30.0	2427	2448	-22.9	12.2	-1441.2	857.8	-152.8	-235.6	-6.3
12TH	157.00	-57.7	29.2	2427	2448	-23.8	11.9	-1385.7	827.8	-141.8	-217.2	-6.0
13TH	170.00	-59.6	29.6	2427	2448	-24.6	12.1	-1328.0	798.5	-131.3	-199.6	-5.6
14TH	183.00	-61.6	30.3	2427	2448	-25.4	12.4	-1268.4	769.0	-121.1	-182.7	-5.2
15TH	196.00	-62.6	31.1	2427	2448	-25.8	12.7	-1206.8	738.6	-111.3	-166.6	-4.8
16TH	209.00	-61.4	31.4	2427	2448	-25.3	12.8	-1144.2	707.5	-101.9	-151.3	-4.4
17TH	222.00	-60.1	31.6	2427	2448	-24.8	12.9	-1082.8	676.1	-92.9	-136.8	-4.1
18TH	235.00	-58.9	31.8	2427	2448	-24.3	13.0	-1022.7	644.6	-84.3	-123.2	-3.8
19TH	248.00	-57.9	32.0	2427	2448	-23.9	13.1	-963.7	612.8	-76.1	-110.2	-3.5
20TH	261.00	-57.4	32.0	2427	2448	-23.6	13.1	-905.9	580.8	-68.4	-98.1	-3.3
21ST	274.00	-56.9	32.1	2427	2448	-23.4	13.1	-848.5	548.8	-61.0	-86.7	-3.1
22ND	287.00	-56.3	32.2	2427	2448	-23.2	13.2	-791.6	516.6	-54.1	-76.0	-3.0
23RD	300.00	-55.8	32.3	2427	2448	-23.0	13.2	-735.3	484.4	-47.6	-66.1	-2.8
24TH	313.00	-55.3	32.4	2427	2448	-22.8	13.2	-679.5	452.2	-41.5	-56.9	-2.6
25TH	326.00	-54.8	32.5	2427	2448	-22.6	13.3	-624.2	419.8	-35.8	-48.4	-2.5
26TH	339.00	-54.3	32.5	2427	2448	-22.4	13.3	-569.4	387.3	-30.6	-40.7	-2.4
27TH	352.00	-53.9	32.5	2427	2448	-22.2	13.3	-515.2	354.8	-25.8	-33.6	-2.3
28TH	365.00	-53.8	32.3	2427	2448	-22.2	13.2	-461.3	322.3	-21.4	-27.3	-2.2
29TH	378.00	-53.6	32.2	2427	2448	-22.1	13.1	-407.5	289.9	-17.4	-21.6	-2.1
30TH	391.00	-53.5	32.0	2427	2448	-22.1	13.1	-353.8	257.8	-13.8	-16.7	-2.0
31ST	404.00	-53.4	31.8	2427	2448	-22.0	13.0	-300.3	225.8	-10.7	-12.4	-1.9
32ND	417.00	-53.3	33.5	2427	2448	-22.0	13.7	-246.9	194.0	-8.0	-8.9	-1.9
33RD	430.00	-54.8	31.0	2613	2287	-21.0	13.5	-193.7	160.5	-5.7	-6.0	-1.9
34TH	444.00	-58.3	41.2	3173	2777	-18.4	14.8	-138.9	129.5	-3.6	-3.7	-1.1
35TH	461.00	-32.9	41.6	2975	3202	-11.1	13.0	-80.6	88.3	-1.8	-1.8	-.1
36TH	478.00	-24.8	24.3	2275	2340	-10.9	10.4	-47.6	46.7	-.6	-.7	-.0
37TH	491.00	-13.5	19.7	1170	2340	-11.5	8.4	-22.8	22.3	-.2	-.3	-.1
38TH	504.00	-9.3	2.7	693	433	-13.5	6.2	-9.3	2.7	-.0	-.1	-.1

TABLE 7. SHEAR AND MOMENT DIAGRAMS : BASS BROTHERS OFFICE BUILDING - PHASE II, FT. WORTH
WIND DIRECTION 20 CONFIGURATION C REFERENCE PRESSURE 26.0 PSF GUST FACTOR 1.32

FLOOR	HEIGHT FT	X-FORCE KIPS	Y-FORCE KIPS	X-AREA SQ FT	Y-AREA SQ FT	X-PRESS PSF	Y-PRESS PSF	X-SHEAR KIPS	Y-SHEAR KIPS	X-MOMENT 1000-FT-KIPS	Y-MOMENT 1000-FT-KIPS	Z-MOMENT 1000-FT-KIPS
GRND	0.00	-58.1	40.4	3240	3060	-17.9	13.2	-1780.5	1552.1	-403.4	-443.4	6.8
2ND	18.00	-50.7	37.4	2700	3050	-18.8	12.2	-1722.4	1511.7	-375.8	-411.9	8.0
3RD	33.00	-49.1	45.9	3600	4067	-13.6	11.3	-1671.7	1474.4	-353.4	-386.5	8.2
4TH	53.00	-34.4	43.3	2340	2448	-14.7	17.7	-1622.6	1428.5	-324.4	-353.5	8.2
5TH	66.00	-34.6	41.7	2340	2448	-14.8	17.0	-1588.2	1385.2	-306.1	-332.6	8.4
6TH	79.00	-34.7	40.1	2340	2448	-14.8	16.4	-1553.6	1343.5	-288.3	-312.2	8.7
7TH	92.00	-45.7	38.8	2427	2448	-18.8	15.8	-1518.9	1303.4	-271.1	-292.2	9.3
8TH	105.00	-47.4	38.7	2427	2448	-19.5	15.8	-1473.2	1264.6	-254.4	-272.8	9.3
9TH	118.00	-49.1	38.7	2427	2448	-20.2	15.8	-1425.8	1225.9	-238.2	-254.0	9.4
10TH	131.00	-50.8	38.7	2427	2448	-20.9	15.8	-1376.7	1187.2	-222.6	-235.7	9.4
11TH	144.00	-52.5	38.7	2427	2448	-21.6	15.8	-1325.9	1148.5	-207.4	-218.2	9.4
12TH	157.00	-54.2	38.7	2427	2448	-22.3	15.8	-1273.4	1109.8	-192.7	-201.3	9.4
13TH	170.00	-54.9	39.1	2427	2448	-22.6	16.0	-1219.3	1071.1	-178.5	-185.1	9.4
14TH	183.00	-55.6	39.7	2427	2448	-22.9	16.2	-1164.4	1032.0	-164.9	-169.6	9.3
15TH	196.00	-55.8	40.2	2427	2448	-23.0	16.4	-1108.8	992.3	-151.7	-154.8	9.2
16TH	209.00	-55.0	40.6	2427	2448	-22.7	16.6	-1053.0	952.1	-139.1	-140.8	8.9
17TH	222.00	-54.3	41.0	2427	2448	-22.4	16.8	-997.9	911.5	-126.9	-127.4	8.6
18TH	235.00	-53.5	41.4	2427	2448	-22.0	16.9	-943.6	870.5	-115.4	-114.8	8.3
19TH	248.00	-52.8	41.7	2427	2448	-21.8	17.0	-890.1	829.0	-104.3	-102.9	7.9
20TH	261.00	-52.5	41.6	2427	2448	-21.6	17.0	-837.3	787.3	-93.8	-91.7	7.5
21ST	274.00	-52.2	41.4	2427	2448	-21.5	16.9	-784.8	745.8	-83.8	-81.1	7.1
22ND	287.00	-51.9	41.3	2427	2448	-21.4	16.9	-732.5	704.3	-74.4	-71.2	6.6
23RD	300.00	-51.7	41.1	2427	2448	-21.3	16.8	-680.6	663.1	-65.5	-62.1	6.1
24TH	313.00	-51.4	41.0	2427	2448	-21.2	16.7	-628.9	622.0	-57.2	-53.6	5.6
25TH	326.00	-51.1	40.8	2427	2448	-21.0	16.7	-577.6	581.0	-49.4	-45.7	5.1
26TH	339.00	-50.8	40.6	2427	2448	-20.9	16.6	-526.5	540.2	-42.1	-38.5	4.6
27TH	352.00	-50.2	41.7	2427	2448	-20.7	17.0	-475.7	499.6	-35.3	-32.0	4.0
28TH	365.00	-49.3	44.7	2427	2448	-20.3	18.3	-425.5	457.9	-29.1	-26.2	3.5
29TH	378.00	-48.3	47.7	2427	2448	-19.9	19.5	-376.2	413.1	-23.4	-20.9	3.0
30TH	391.00	-47.4	50.7	2427	2448	-19.5	20.7	-327.9	365.4	-18.4	-16.4	2.5
31ST	404.00	-46.5	53.7	2427	2448	-19.1	21.9	-280.5	314.7	-13.9	-12.4	2.1
32ND	417.00	-45.5	53.7	2427	2448	-18.8	21.9	-234.0	261.0	-10.2	-9.1	1.7
33RD	430.00	-49.0	45.4	2613	2287	-18.7	19.8	-188.5	207.3	-7.2	-6.3	1.3
34TH	444.00	-54.3	49.7	3173	2777	-17.1	17.9	-139.6	162.0	-4.6	-4.0	1.7
35TH	461.00	-29.3	52.7	2975	3202	-9.9	16.4	-85.2	112.3	-2.2	-2.1	2.1
36TH	478.00	-26.3	31.9	2275	2340	-11.6	13.6	-55.9	59.6	-.8	-.9	.8
37TH	491.00	-16.5	24.8	1170	2340	-14.1	10.6	-29.6	27.7	-.2	-.4	.1
38TH	504.00	-13.1	2.8	693	433	-18.9	6.6	-13.1	2.8	-.0	-.1	-.2

TABLE 7. SHEAR AND MOMENT DIAGRAMS ; BASS BROTHERS OFFICE BUILDING - PHASE II, FT. WORTH
WIND DIRECTION 30 CONFIGURATION C REFERENCE PRESSURE 26.0 PSF GUST FACTOR 1.32

FLOOR	HEIGHT FT	X-FORCE KIPS	Y-FORCE KIPS	X-AREA SQ FT	Y-AREA SQ FT	X-PRESS PSF	Y-PRESS PSF	X-SHEAR KIPS	Y-SHEAR KIPS	X-MOMENT 1000-FT-KIPS	Y-MOMENT 1000-FT-KIPS	Z-MOMENT 1000-FT-KIPS
GRND	0.00	-51.9	45.9	3240	3060	-16.0	15.0	-1418.8	1803.3	-466.6	-336.9	26.7
2ND	18.00	-47.4	44.5	2700	3050	-17.5	14.6	-1366.9	1757.5	-434.6	-311.9	27.6
3RD	33.00	-48.7	54.3	3600	4067	-13.5	13.4	-1319.5	1712.9	-408.6	-291.7	27.5
4TH	53.00	-31.2	48.7	2340	2448	-13.3	19.9	-1270.8	1658.6	-374.9	-265.8	27.3
5TH	66.00	-30.0	48.2	2340	2448	-12.8	19.7	-1239.6	1609.9	-353.6	-249.5	27.3
6TH	79.00	-28.8	47.6	2340	2448	-12.3	19.4	-1209.6	1561.7	-333.0	-233.6	27.3
7TH	92.00	-40.4	47.0	2427	2448	-16.7	19.2	-1180.9	1514.1	-313.0	-218.0	27.3
8TH	105.00	-41.2	46.8	2427	2448	-17.0	19.1	-1140.5	1467.1	-293.6	-202.9	26.7
9TH	118.00	-41.9	46.5	2427	2448	-17.3	19.0	-1099.3	1420.3	-274.9	-188.4	26.1
10TH	131.00	-42.7	46.2	2427	2448	-17.6	18.9	-1057.3	1373.8	-256.7	-174.4	25.5
11TH	144.00	-43.5	45.9	2427	2448	-17.9	18.8	-1014.6	1327.6	-239.1	-160.9	25.0
12TH	157.00	-44.2	45.7	2427	2448	-18.2	18.7	-971.1	1281.7	-222.2	-148.0	24.5
13TH	170.00	-43.7	46.0	2427	2448	-18.0	18.8	-926.9	1236.0	-205.8	-135.7	24.0
14TH	183.00	-43.2	46.6	2427	2448	-17.8	19.0	-883.2	1190.0	-190.0	-123.9	23.4
15TH	196.00	-42.9	47.4	2427	2448	-17.7	19.4	-839.9	1143.4	-174.9	-112.7	22.5
16TH	209.00	-43.1	47.7	2427	2448	-17.8	19.5	-797.0	1096.0	-160.3	-102.1	21.5
17TH	222.00	-43.2	48.0	2427	2448	-17.8	19.6	-753.9	1048.3	-146.4	-92.0	20.5
18TH	235.00	-43.4	48.3	2427	2448	-17.9	19.7	-710.7	1000.3	-133.1	-82.5	19.5
19TH	248.00	-43.4	48.5	2427	2448	-17.9	19.8	-667.3	952.0	-120.4	-73.5	18.6
20TH	261.00	-42.8	48.3	2427	2448	-17.6	19.7	-623.9	903.5	-108.3	-65.1	17.7
21ST	274.00	-42.2	48.1	2427	2448	-17.4	19.6	-581.1	855.2	-96.9	-57.3	16.8
22ND	287.00	-41.7	47.9	2427	2448	-17.2	19.5	-538.9	807.1	-86.1	-50.0	15.8
23RD	300.00	-41.1	47.6	2427	2448	-16.9	19.5	-497.2	759.3	-75.9	-43.3	14.9
24TH	313.00	-40.5	47.4	2427	2448	-16.7	19.4	-456.1	711.6	-66.3	-37.1	13.9
25TH	326.00	-40.0	47.2	2427	2448	-16.5	19.3	-415.5	664.2	-57.4	-31.4	13.0
26TH	339.00	-39.4	47.0	2427	2448	-16.2	19.2	-375.6	617.0	-49.1	-26.3	12.0
27TH	352.00	-38.6	47.8	2427	2448	-15.9	19.5	-336.2	570.0	-41.4	-21.6	11.0
28TH	365.00	-37.3	50.2	2427	2448	-15.4	20.5	-297.6	522.2	-34.3	-17.5	10.1
29TH	378.00	-36.1	52.5	2427	2448	-14.9	21.4	-260.3	472.0	-27.8	-13.9	9.1
30TH	391.00	-34.8	54.9	2427	2448	-14.4	22.4	-224.3	419.5	-22.0	-10.7	8.1
31ST	404.00	-33.6	57.2	2427	2448	-13.8	23.4	-189.4	364.7	-16.9	-8.0	7.1
32ND	417.00	-32.3	57.4	2427	2448	-13.3	23.4	-155.8	307.4	-12.5	-5.8	6.2
33RD	430.00	-35.8	50.4	2613	2287	-13.7	22.0	-123.5	250.0	-8.9	-4.0	5.1
34TH	444.00	-39.1	58.0	3173	2777	-12.3	20.9	-87.7	199.6	-5.8	-2.5	5.0
35TH	461.00	-12.8	65.2	2975	3202	-4.3	20.4	-48.6	141.6	-2.9	-1.3	4.8
36TH	478.00	-15.4	41.1	2275	2340	-6.8	17.6	-35.8	76.4	-1.0	-.6	2.2
37TH	491.00	-10.5	31.7	1170	2340	-9.0	13.5	-20.4	35.3	-.3	-.3	.8
38TH	504.00	-9.9	3.7	693	433	-14.3	8.4	-9.9	3.7	-.0	-.1	-.1

TABLE 7. SHEAR AND MOMENT DIAGRAMS : BASS BROTHERS OFFICE BUILDING - PHASE II, FT. WORTH
WIND DIRECTION 40 CONFIGURATION C REFERENCE PRESSURE 26.0 PSF GUST FACTOR 1.32

FLOOR	HEIGHT FT	X-FORCE KIPS	Y-FORCE KIPS	X-AREA SQ FT	Y-AREA SQ FT	X-PRESS PSF	Y-PRESS PSF	X-SHEAR KIPS	Y-SHEAR KIPS	X-MOMENT 1000-FT-KIPS	Y-MOMENT 1000-FT-KIPS	Z-MOMENT 1000-FT-KIPS
GRND	0.00	-29.0	43.7	3240	3060	-9.0	14.3	-757.5	1997.1	-528.2	-154.7	39.9
2ND	18.00	-28.1	42.7	2700	3050	-10.4	14.0	-728.5	1953.3	-492.6	-141.3	40.3
3RD	33.00	-30.8	51.8	3600	4067	-8.6	12.7	-700.4	1910.7	-463.6	-130.6	39.6
4TH	53.00	-22.4	49.0	2340	2448	-9.6	20.0	-669.6	1858.9	-426.0	-116.9	38.2
5TH	66.00	-21.6	50.6	2340	2448	-9.2	20.7	-647.2	1810.0	-402.1	-108.4	37.8
6TH	79.00	-20.9	52.2	2340	2448	-8.9	21.3	-625.6	1759.4	-378.9	-100.1	37.4
7TH	92.00	-29.0	53.6	2427	2448	-11.9	21.9	-604.7	1707.2	-356.4	-92.1	37.0
8TH	105.00	-28.6	53.0	2427	2448	-11.8	21.6	-575.7	1653.6	-334.5	-84.4	36.3
9TH	118.00	-28.1	52.4	2427	2448	-11.6	21.4	-547.1	1600.7	-313.4	-77.1	35.5
10TH	131.00	-27.7	51.8	2427	2448	-11.4	21.2	-519.0	1548.3	-292.9	-70.2	34.7
11TH	144.00	-27.3	51.2	2427	2448	-11.2	20.9	-491.3	1496.5	-273.1	-63.6	33.9
12TH	157.00	-26.9	50.6	2427	2448	-11.1	20.7	-464.0	1445.3	-254.0	-57.4	33.2
13TH	170.00	-26.2	51.1	2427	2448	-10.8	20.9	-437.1	1394.7	-235.5	-51.6	32.4
14TH	183.00	-25.5	51.2	2427	2448	-10.5	20.9	-410.9	1343.6	-217.7	-46.0	31.3
15TH	196.00	-24.9	51.3	2427	2448	-10.3	21.0	-385.4	1292.4	-200.6	-40.9	30.1
16TH	209.00	-24.6	51.7	2427	2448	-10.1	21.1	-360.5	1241.1	-184.1	-36.0	28.7
17TH	222.00	-24.2	52.1	2427	2448	-10.0	21.3	-336.0	1189.4	-168.3	-31.5	27.4
18TH	235.00	-23.9	52.5	2427	2448	-9.8	21.5	-311.8	1137.2	-153.2	-27.3	26.1
19TH	248.00	-23.6	53.0	2427	2448	-9.7	21.6	-287.9	1084.7	-138.8	-23.4	24.9
20TH	261.00	-23.4	53.4	2427	2448	-9.6	21.8	-264.3	1031.7	-125.0	-19.8	23.8
21ST	274.00	-23.2	53.9	2427	2448	-9.5	22.0	-241.0	978.3	-111.9	-16.5	22.7
22ND	287.00	-22.9	54.3	2427	2448	-9.5	22.2	-217.8	924.4	-99.6	-13.5	21.5
23RD	300.00	-22.7	54.8	2427	2448	-9.4	22.4	-194.9	870.1	-87.9	-10.8	20.4
24TH	313.00	-22.5	55.3	2427	2448	-9.3	22.6	-172.1	815.3	-77.0	-8.5	19.3
25TH	326.00	-22.3	55.7	2427	2448	-9.2	22.8	-149.6	760.1	-66.7	-6.4	18.1
26TH	339.00	-22.1	56.2	2427	2448	-9.1	22.9	-127.3	704.3	-57.2	-4.6	17.0
27TH	352.00	-21.3	56.7	2427	2448	-8.8	23.2	-105.1	648.2	-48.4	-3.1	15.8
28TH	365.00	-19.6	57.4	2427	2448	-8.1	23.5	-83.8	591.4	-40.3	-1.8	14.7
29TH	378.00	-17.9	58.1	2427	2448	-7.4	23.7	-64.2	534.0	-33.0	-.9	13.5
30TH	391.00	-16.2	58.8	2427	2448	-6.7	24.0	-46.3	475.9	-26.5	-.1	12.2
31ST	404.00	-14.4	59.5	2427	2448	-5.9	24.3	-30.2	417.1	-20.7	.3	10.9
32ND	417.00	-12.7	59.1	2427	2448	-5.2	24.1	-15.7	357.6	-15.6	.6	9.5
33RD	430.00	-13.6	53.2	2613	2287	-5.2	23.3	-3.0	298.5	-11.4	.8	8.0
34TH	444.00	-11.4	63.0	3173	2777	-3.6	22.7	10.6	245.3	-7.6	.7	7.5
35TH	461.00	12.0	75.5	2975	3202	4.0	23.6	22.0	182.3	-3.9	.4	7.0
36TH	478.00	3.9	52.8	2275	2340	1.7	22.6	10.0	106.7	-1.5	.2	3.4
37TH	491.00	4.3	48.2	1170	2340	3.7	20.6	6.1	53.9	-.4	.1	1.6
38TH	504.00	1.8	5.7	693	433	2.6	13.2	1.8	5.7	-.0	.0	-.0

TABLE 7. SHEAR AND MOMENT DIAGRAMS ; BASS BROTHERS OFFICE BUILDING - PHASE II, FT. WORTH
WIND DIRECTION 50 CONFIGURATION C REFERENCE PRESSURE 26.0 PSF GUST FACTOR 1.32

FLOOR	HEIGHT FT	X-FORCE KIPS	Y-FORCE KIPS	X-AREA SQ FT	Y-AREA SQ FT	X-PRESS PSF	Y-PRESS PSF	X-SHEAR KIPS	Y-SHEAR KIPS	X-MOMENT 1000-FT-KIPS	Y-MOMENT 1000-FT-KIPS	Z-MOMENT 1000-FT-KIPS
GRND	0.00	-.7	38.1	3240	3060	-.2	12.5	-59.4	1891.4	-504.9	12.0	27.0
2ND	18.00	-1.8	38.4	2700	3050	-.7	12.6	-58.7	1853.3	-471.2	13.0	27.0
3RD	33.00	2.1	51.6	3600	4067	.6	12.7	-56.9	1814.9	-443.7	13.9	26.0
4TH	53.00	-6.7	44.7	2340	2448	-2.9	18.3	-59.0	1763.3	-407.9	15.1	24.0
5TH	66.00	-7.5	45.9	2340	2448	-3.2	18.7	-52.3	1718.6	-385.3	15.8	23.5
6TH	79.00	-8.4	47.0	2340	2448	-3.6	19.2	-44.8	1672.7	-363.2	16.4	22.9
7TH	92.00	-10.0	48.0	2427	2448	-4.1	19.6	-36.4	1625.6	-341.8	16.9	22.4
8TH	105.00	-10.1	48.0	2427	2448	-4.2	19.6	-26.4	1577.6	-321.0	17.3	21.7
9TH	118.00	-10.3	48.0	2427	2448	-4.2	19.6	-16.3	1529.6	-300.8	17.6	21.1
10TH	131.00	-10.5	48.0	2427	2448	-4.3	19.6	-6.0	1481.5	-281.2	17.8	20.6
11TH	144.00	-10.6	48.0	2427	2448	-4.4	19.6	4.5	1433.5	-262.3	17.8	20.1
12TH	157.00	-10.8	48.1	2427	2448	-4.4	19.6	15.1	1385.5	-243.9	17.7	19.6
13TH	170.00	-8.3	48.6	2427	2448	-3.4	19.9	25.9	1337.4	-226.2	17.4	19.2
14TH	183.00	-5.9	48.9	2427	2448	-2.4	20.0	34.2	1288.8	-209.2	17.0	18.5
15TH	196.00	-4.2	49.2	2427	2448	-1.7	20.1	40.1	1239.9	-192.7	16.5	17.7
16TH	209.00	-4.3	49.7	2427	2448	-1.8	20.3	44.3	1190.7	-176.9	16.0	16.7
17TH	222.00	-4.4	50.1	2427	2448	-1.8	20.5	48.6	1141.1	-161.8	15.4	15.8
18TH	235.00	-4.4	50.5	2427	2448	-1.8	20.6	53.0	1091.0	-147.3	14.7	15.1
19TH	248.00	-4.4	51.0	2427	2448	-1.8	20.8	57.4	1040.4	-133.4	14.0	14.5
20TH	261.00	-3.8	51.4	2427	2448	-1.6	21.0	61.8	989.5	-120.2	13.2	14.0
21ST	274.00	-3.2	51.8	2427	2448	-1.3	21.2	65.5	938.1	-107.7	12.4	13.4
22ND	287.00	-2.5	52.2	2427	2448	-1.0	21.3	68.7	886.3	-95.8	11.5	12.9
23RD	300.00	-1.9	52.6	2427	2448	-.8	21.5	71.2	834.1	-84.7	10.6	12.3
24TH	313.00	-1.3	53.0	2427	2448	-.5	21.7	73.2	781.5	-74.2	9.7	11.8
25TH	326.00	-.7	53.5	2427	2448	-.3	21.8	74.5	728.4	-64.3	8.7	11.2
26TH	339.00	-.1	53.9	2427	2448	-.0	22.0	75.2	675.0	-55.2	7.7	10.6
27TH	352.00	.9	54.3	2427	2448	.4	22.2	75.4	621.1	-46.8	6.7	10.0
28TH	365.00	2.7	54.6	2427	2448	1.1	22.3	74.4	566.8	-39.1	5.8	9.4
29TH	378.00	4.5	54.9	2427	2448	1.8	22.4	71.7	512.2	-32.1	4.8	8.6
30TH	391.00	6.2	55.3	2427	2448	2.6	22.6	67.2	457.3	-25.8	3.9	7.8
31ST	404.00	8.0	55.6	2427	2448	3.3	22.7	61.0	402.0	-20.2	3.1	6.8
32ND	417.00	9.7	55.4	2427	2448	4.0	22.6	53.1	346.4	-15.3	2.3	5.8
33RD	430.00	8.4	51.1	2613	2287	3.2	22.3	43.3	291.0	-11.2	1.7	4.6
34TH	444.00	8.3	61.9	3173	2777	2.6	22.3	34.9	239.9	-7.5	1.2	4.3
35TH	461.00	11.3	71.2	2975	3202	3.8	22.2	26.7	178.0	-3.9	.6	4.1
36TH	478.00	5.3	51.8	2275	2340	2.3	22.1	15.4	106.7	-1.5	.3	2.0
37TH	491.00	5.6	49.6	1170	2340	4.8	21.2	10.1	55.0	-.4	.1	1.0
38TH	504.00	4.5	5.4	693	433	6.5	12.5	4.5	5.4	-.0	.0	.0

TABLE 7. SHEAR AND MOMENT DIAGRAMS : BASS BROTHERS OFFICE BUILDING - PHASE II, FT. WORTH
WIND DIRECTION 60 CONFIGURATION C REFERENCE PRESSURE 26.0 PSF GUST FACTOR 1.32

FLOOR	HEIGHT FT	X-FORCE KIPS	Y-FORCE KIPS	X-AREA SQ FT	Y-AREA SQ FT	X-PRESS PSF	Y-PRESS PSF	X-SHEAR KIPS	Y-SHEAR KIPS	X-MOMENT 1000-FT-KIPS	Y-MOMENT 1000-FT-KIPS	Z-MOMENT 1000-FT-KIPS
GRND	0.00	7.6	40.4	3240	3060	2.4	13.2	135.3	1968.2	-532.0	41.0	3.3
2ND	18.00	9.6	38.9	2700	3050	3.6	12.8	127.7	1927.8	-497.0	38.6	3.3
3RD	33.00	15.5	51.1	3600	4067	4.3	12.6	118.1	1888.9	-468.4	36.7	2.4
4TH	53.00	1.7	45.7	2340	2448	.7	18.7	102.5	1837.7	-431.1	34.5	1.2
5TH	66.00	.3	47.2	2340	2448	.1	19.3	100.9	1792.0	-407.5	33.2	1.1
6TH	79.00	-1.0	48.7	2340	2448	-.4	19.9	100.6	1744.9	-384.5	31.9	.9
7TH	92.00	.5	50.0	2427	2448	.2	20.4	101.6	1696.1	-362.1	30.6	.7
8TH	105.00	-.3	49.8	2427	2448	-.1	20.3	101.1	1646.1	-340.4	29.3	.6
9TH	118.00	-1.1	49.5	2427	2448	-.5	20.2	101.4	1596.4	-319.3	28.0	.6
10TH	131.00	-1.9	49.3	2427	2448	-.8	20.1	102.5	1546.8	-298.9	26.6	.7
11TH	144.00	-2.7	49.0	2427	2448	-1.1	20.0	104.5	1497.5	-279.1	25.3	.9
12TH	157.00	-3.5	48.8	2427	2448	-1.4	19.9	107.2	1448.5	-260.0	23.9	1.2
13TH	170.00	-.1	49.2	2427	2448	-.1	20.1	110.7	1399.7	-241.5	22.5	1.6
14TH	183.00	3.2	49.5	2427	2448	1.3	20.2	110.9	1350.5	-223.6	21.1	1.8
15TH	196.00	5.3	49.6	2427	2448	2.2	20.2	107.6	1300.9	-206.3	19.6	1.6
16TH	209.00	4.5	50.0	2427	2448	1.9	20.4	102.4	1251.4	-189.8	18.3	1.4
17TH	222.00	3.8	50.5	2427	2448	1.6	20.6	97.9	1201.3	-173.8	17.0	1.2
18TH	235.00	3.0	51.1	2427	2448	1.3	20.9	94.1	1150.8	-158.5	15.7	1.1
19TH	248.00	2.4	51.5	2427	2448	1.0	21.0	91.1	1099.7	-143.9	14.5	1.1
20TH	261.00	2.4	51.9	2427	2448	1.0	21.2	88.6	1048.2	-129.9	13.3	1.1
21ST	274.00	2.3	52.2	2427	2448	.9	21.3	86.3	996.3	-116.6	12.2	1.2
22ND	287.00	2.2	52.6	2427	2448	.9	21.5	84.0	944.1	-104.0	11.1	1.3
23RD	300.00	2.1	52.9	2427	2448	.9	21.6	81.8	891.5	-92.1	10.0	1.3
24TH	313.00	2.0	53.3	2427	2448	.8	21.8	79.7	838.6	-80.9	9.0	1.4
25TH	326.00	1.9	53.7	2427	2448	.8	21.9	77.7	785.3	-70.3	8.0	1.5
26TH	339.00	1.8	54.0	2427	2448	.8	22.1	75.8	731.6	-60.4	7.0	1.6
27TH	352.00	2.4	55.1	2427	2448	1.0	22.5	73.9	677.6	-51.3	6.0	1.6
28TH	365.00	3.9	57.4	2427	2448	1.6	23.4	71.5	622.5	-42.8	5.0	1.7
29TH	378.00	5.4	59.6	2427	2448	2.2	24.3	67.7	565.1	-35.1	4.1	1.6
30TH	391.00	6.8	61.9	2427	2448	2.8	25.3	62.3	505.5	-28.2	3.3	1.5
31ST	404.00	8.3	64.1	2427	2448	3.4	26.2	55.5	443.7	-22.0	2.5	1.2
32ND	417.00	9.8	63.8	2427	2448	4.0	26.0	47.2	379.6	-16.6	1.9	.9
33RD	430.00	8.3	57.7	2613	2287	3.2	25.2	37.4	315.8	-12.1	1.3	.4
34TH	444.00	8.4	66.7	3173	2777	2.6	24.0	29.1	258.1	-8.1	.8	.6
35TH	461.00	11.8	74.3	2975	3202	4.0	23.2	20.7	191.4	-4.3	.4	1.1
36TH	478.00	4.1	55.4	2275	2340	1.8	23.7	8.9	117.1	-1.7	.2	.3
37TH	491.00	1.6	54.9	1170	2340	1.4	23.5	4.9	61.8	-.5	.1	.2
38TH	504.00	3.2	6.8	693	433	4.7	15.8	3.2	6.8	-.0	.0	-.0

TABLE 7. SHEAR AND MOMENT DIAGRAMS : BASS BROTHERS OFFICE BUILDING - PHASE II, FT. WORTH
WIND DIRECTION 70 CONFIGURATION C REFERENCE PRESSURE 26.0 PSF GUST FACTOR 1.32

FLOOR	HEIGHT FT	X-FORCE KIPS	Y-FORCE KIPS	X-AREA SQ FT	Y-AREA SQ FT	X-PRESS PSF	Y-PRESS PSF	X-SHEAR KIPS	Y-SHEAR KIPS	X-MOMENT	Y-MOMENT	Z-MOMENT
										1000-FT-KIPS		
GRND	0.00	25.8	48.7	3240	3060	8.0	15.9	665.3	2078.0	-571.1	162.8	-8.8
2ND	18.00	23.0	43.9	2700	3050	8.5	14.4	639.4	2029.3	-534.2	151.1	-8.9
3RD	33.00	31.4	55.5	3600	4067	8.7	13.6	616.4	1985.4	-504.1	141.7	-9.7
4TH	53.00	14.6	46.4	2340	2448	6.2	19.0	585.1	1929.9	-464.9	129.6	-10.7
5TH	66.00	13.8	47.0	2340	2448	5.9	19.2	570.5	1883.5	-440.1	122.1	-10.8
6TH	79.00	13.0	47.6	2340	2448	5.6	19.5	556.7	1836.5	-415.9	114.8	-10.9
7TH	92.00	16.4	48.2	2427	2448	6.8	19.7	543.7	1788.8	-392.4	107.7	-11.1
8TH	105.00	16.3	48.5	2427	2448	6.7	19.8	527.3	1740.6	-369.4	100.7	-11.0
9TH	118.00	16.1	48.7	2427	2448	6.6	19.9	511.0	1692.2	-347.1	93.9	-10.9
10TH	131.00	15.9	48.9	2427	2448	6.6	20.0	494.9	1643.5	-325.4	87.4	-10.7
11TH	144.00	15.8	49.2	2427	2448	6.5	20.1	478.9	1594.5	-304.4	81.1	-10.3
12TH	157.00	15.7	49.4	2427	2448	6.5	20.2	463.2	1545.3	-284.0	75.0	-9.8
13TH	170.00	19.6	49.5	2427	2448	8.1	20.2	447.5	1495.9	-264.2	69.0	-9.2
14TH	183.00	23.6	49.3	2427	2448	9.7	20.1	427.9	1446.4	-245.1	63.3	-8.9
15TH	196.00	25.5	49.5	2427	2448	10.5	20.2	404.3	1397.1	-226.6	57.9	-8.8
16TH	209.00	23.1	49.7	2427	2448	9.5	20.3	378.9	1347.7	-208.8	52.8	-9.0
17TH	222.00	20.7	50.0	2427	2448	8.5	20.4	355.8	1297.9	-191.6	48.1	-8.9
18TH	235.00	18.3	50.3	2427	2448	7.5	20.5	335.1	1247.9	-175.0	43.6	-8.8
19TH	248.00	16.4	50.7	2427	2448	6.8	20.7	316.8	1197.6	-159.1	39.3	-8.6
20TH	261.00	16.2	51.7	2427	2448	6.7	21.1	300.4	1146.9	-143.9	35.3	-8.2
21ST	274.00	16.0	52.7	2427	2448	6.6	21.5	284.2	1095.1	-129.3	31.5	-7.8
22ND	287.00	15.7	53.7	2427	2448	6.5	21.9	268.3	1042.4	-115.4	27.9	-7.3
23RD	300.00	15.5	54.7	2427	2448	6.4	22.3	252.5	988.7	-102.2	24.6	-6.8
24TH	313.00	15.3	55.7	2427	2448	6.3	22.7	237.0	934.0	-89.7	21.4	-6.2
25TH	326.00	15.1	56.7	2427	2448	6.2	23.2	221.7	878.3	-78.0	18.4	-5.6
26TH	339.00	14.9	57.7	2427	2448	6.1	23.6	206.6	821.6	-66.9	15.6	-4.9
27TH	352.00	15.3	60.1	2427	2448	6.3	24.5	191.7	763.9	-56.6	13.0	-4.1
28TH	365.00	16.6	64.7	2427	2448	6.8	26.4	176.5	703.8	-47.1	10.6	-3.4
29TH	378.00	18.0	69.2	2427	2448	7.4	28.3	159.8	639.2	-38.3	8.4	-2.8
30TH	391.00	19.3	73.8	2427	2448	8.0	30.1	141.9	569.9	-30.5	6.5	-2.3
31ST	404.00	20.6	78.4	2427	2448	8.5	32.0	122.6	496.1	-23.5	4.8	-1.9
32ND	417.00	22.0	77.3	2427	2448	9.1	31.6	101.9	417.8	-17.6	3.3	-1.7
33RD	430.00	22.6	68.7	2613	2287	8.7	30.0	80.0	340.5	-12.7	2.1	-1.7
34TH	444.00	26.2	74.0	3173	2777	8.3	26.7	57.3	271.9	-8.4	1.2	-1.0
35TH	461.00	23.2	78.4	2975	3202	7.8	24.5	31.1	197.9	-4.4	.4	-.3
36TH	478.00	8.1	57.3	2275	2340	3.6	24.5	8.0	119.5	-1.7	.1	-.5
37TH	491.00	-1.8	53.9	1170	2340	-1.6	23.0	-.2	62.2	-.5	.0	-.2
38TH	504.00	1.7	8.2	693	433	2.4	19.0	1.7	8.2	-.1	.0	-.1

TABLE 7. SHEAR AND MOMENT DIAGRAMS : BASS BROTHERS OFFICE BUILDING - PHASE II, FT. WORTH

WIND DIRECTION 80 CONFIGURATION C REFERENCE PRESSURE 26.0 PSF GUST FACTOR 1.32

FLOOR	HEIGHT FT	X-FORCE KIPS	Y-FORCE KIPS	X-AREA SQ FT	Y-AREA SQ FT	X-PRESS PSF	Y-PRESS PSF	X-SHEAR KIPS	Y-SHEAR KIPS	X-MOMENT 1000-FT-KIPS	Y-MOMENT 1000-FT-KIPS	Z-MOMENT 1000-FT-KIPS
GRND	0.00	33.2	55.0	3240	3060	10.2	18.0	1315.2	2162.8	-598.3	351.0	-2.1
2ND	18.00	31.1	47.7	2700	3050	11.5	15.6	1282.1	2107.8	-559.8	327.6	-2.3
3RD	33.00	41.0	57.9	3600	4067	11.4	14.2	1251.0	2060.1	-528.6	308.6	-3.0
4TH	53.00	21.7	48.2	2340	2448	9.3	19.7	1210.0	2002.2	-488.0	284.0	-4.1
5TH	66.00	23.2	49.8	2340	2448	9.9	20.3	1188.2	1954.0	-462.2	268.4	-4.2
6TH	79.00	24.7	51.4	2340	2448	10.6	21.0	1165.0	1904.2	-437.2	253.1	-4.3
7TH	92.00	30.1	52.7	2427	2448	12.4	21.5	1140.2	1852.9	-412.7	238.1	-4.3
8TH	105.00	30.8	51.7	2427	2448	12.7	21.1	1110.2	1800.2	-389.0	223.5	-4.1
9TH	118.00	31.4	50.8	2427	2448	13.0	20.7	1079.4	1748.4	-365.9	209.3	-3.8
10TH	131.00	32.1	49.8	2427	2448	13.2	20.3	1048.0	1697.7	-343.5	195.5	-3.4
11TH	144.00	32.8	48.8	2427	2448	13.5	19.9	1015.9	1647.9	-321.8	182.0	-3.1
12TH	157.00	33.5	47.9	2427	2448	13.8	19.5	983.1	1599.1	-300.7	169.1	-2.6
13TH	170.00	36.8	47.7	2427	2448	15.2	19.5	949.6	1551.2	-280.2	156.5	-2.2
14TH	183.00	40.2	47.4	2427	2448	16.6	19.4	912.8	1503.6	-260.3	144.4	-2.0
15TH	196.00	41.8	47.4	2427	2448	17.2	19.4	872.6	1456.2	-241.1	132.8	-2.2
16TH	209.00	39.8	47.7	2427	2448	16.4	19.5	830.8	1408.8	-222.5	121.7	-2.5
17TH	222.00	37.8	48.0	2427	2448	15.6	19.6	791.0	1361.0	-204.5	111.2	-2.8
18TH	235.00	35.8	48.3	2427	2448	14.7	19.7	753.3	1313.0	-187.1	101.1	-3.1
19TH	248.00	34.2	48.9	2427	2448	14.1	20.0	717.5	1264.7	-170.3	91.6	-3.3
20TH	261.00	34.5	50.2	2427	2448	14.2	20.5	683.2	1215.8	-154.2	82.5	-3.4
21ST	274.00	34.7	51.6	2427	2448	14.3	21.1	648.8	1165.6	-138.7	73.8	-3.5
22ND	287.00	34.9	52.9	2427	2448	14.4	21.6	614.1	1114.0	-123.9	65.6	-3.5
23RD	300.00	35.1	54.3	2427	2448	14.5	22.2	579.3	1061.1	-109.8	57.8	-3.4
24TH	313.00	35.3	55.6	2427	2448	14.5	22.7	544.2	1006.8	-96.3	50.5	-3.2
25TH	326.00	35.5	56.9	2427	2448	14.6	23.3	508.9	951.2	-83.6	43.7	-3.0
26TH	339.00	35.7	58.3	2427	2448	14.7	23.8	473.4	894.3	-71.6	37.3	-2.6
27TH	352.00	36.4	62.3	2427	2448	15.0	25.5	437.7	836.0	-60.4	31.4	-2.2
28TH	365.00	37.9	70.4	2427	2448	15.6	28.8	401.3	773.7	-49.9	25.9	-1.8
29TH	378.00	39.4	78.6	2427	2448	16.2	32.1	363.4	703.3	-40.3	21.0	-1.4
30TH	391.00	40.8	86.7	2427	2448	16.8	35.4	324.1	624.7	-31.7	16.5	-1.0
31ST	404.00	42.3	94.8	2427	2448	17.4	38.7	283.2	538.0	-24.1	12.5	-.7
32ND	417.00	43.8	92.3	2427	2448	18.0	37.7	240.9	443.1	-17.7	9.1	-.4
33RD	430.00	45.7	79.3	2613	2287	17.5	34.7	197.1	350.9	-12.6	6.3	-.3
34TH	444.00	54.6	77.3	3173	2777	17.2	27.9	151.4	271.6	-8.2	3.8	.3
35TH	461.00	54.7	78.2	2975	3202	18.4	24.4	96.8	194.2	-4.3	1.7	.7
36TH	478.00	28.4	56.8	2275	2340	12.5	24.3	42.1	116.0	-1.6	.6	.2
37TH	491.00	5.7	50.6	1170	2340	4.8	21.6	13.7	59.2	-.5	.2	-.0
38TH	504.00	8.0	8.6	693	433	11.5	19.9	8.0	8.6	-.1	.1	.0

TABLE 7. SHEAR AND MOMENT DIAGRAMS : BASS BROTHERS OFFICE BUILDING - PHASE II, FT. WORTH
WIND DIRECTION 90 CONFIGURATION C REFERENCE PRESSURE 26.0 PSF GUST FACTOR 1.32

FLOOR	HEIGHT FT	X-FORCE KIPS	Y-FORCE KIPS	X-AREA SQ FT	Y-AREA SQ FT	X-PRESS PSF	Y-PRESS PSF	X-SHEAR KIPS	Y-SHEAR KIPS	X-MOMENT 1000-FT-KIPS	Y-MOMENT 1000-FT-KIPS	Z-MOMENT 1000-FT-KIPS
GRND	0.00	36.3	61.6	3240	3060	-11.2	20.1	1415.5	2223.8	-599.8	365.9	1.5
2ND	18.00	33.4	56.2	2700	3050	12.4	18.4	1379.2	2162.1	-560.3	340.7	1.1
3RD	33.00	41.1	67.6	3600	4067	11.4	16.6	1345.8	2106.0	-528.3	320.3	.7
4TH	53.00	22.0	51.0	2340	2448	9.4	20.8	1304.8	2038.4	-486.8	293.8	-.3
5TH	66.00	25.1	52.6	2340	2448	10.7	21.5	1282.7	1987.4	-460.7	276.9	-.5
6TH	79.00	28.2	54.3	2340	2448	12.1	22.2	1257.6	1934.8	-435.2	260.4	-.7
7TH	92.00	35.3	55.6	2427	2448	14.5	22.7	1229.3	1880.5	-410.4	244.3	-.8
8TH	105.00	36.7	55.1	2427	2448	15.1	22.5	1194.1	1824.9	-386.3	228.5	-.7
9TH	118.00	38.2	54.5	2427	2448	15.7	22.3	1157.4	1769.8	-362.9	213.2	-.6
10TH	131.00	39.6	54.0	2427	2448	16.3	22.0	1119.2	1715.3	-340.3	198.4	-.4
11TH	144.00	41.1	53.4	2427	2448	16.9	21.8	1079.6	1661.3	-318.3	184.1	-.2
12TH	157.00	42.5	52.8	2427	2448	17.5	21.6	1038.6	1607.9	-297.1	170.4	-.0
13TH	170.00	45.0	52.0	2427	2448	18.5	21.2	996.0	1555.1	-276.5	157.1	.3
14TH	183.00	47.5	51.2	2427	2448	19.6	20.9	951.1	1503.1	-256.6	144.5	.2
15TH	196.00	48.2	50.7	2427	2448	19.9	20.7	903.6	1451.9	-237.4	132.4	-.1
16TH	209.00	45.2	50.4	2427	2448	18.6	20.6	855.4	1401.2	-218.9	121.0	-.6
17TH	222.00	42.2	50.1	2427	2448	17.4	20.5	810.2	1350.8	-201.0	110.2	-1.0
18TH	235.00	39.2	49.8	2427	2448	16.1	20.3	768.0	1300.7	-183.8	99.9	-1.5
19TH	248.00	36.9	49.8	2427	2448	15.2	20.3	728.8	1250.9	-167.2	90.2	-1.9
20TH	261.00	37.0	50.6	2427	2448	15.3	20.7	691.9	1201.1	-151.2	81.0	-2.3
21ST	274.00	37.2	51.4	2427	2448	15.3	21.0	654.9	1150.6	-135.9	72.2	-2.7
22ND	287.00	37.3	52.2	2427	2448	15.4	21.3	617.7	1099.2	-121.3	63.9	-2.9
23RD	300.00	37.5	53.0	2427	2448	15.5	21.7	580.4	1047.0	-107.4	56.1	-3.1
24TH	313.00	37.7	53.8	2427	2448	15.5	22.0	542.9	994.0	-94.1	48.8	-3.2
25TH	326.00	37.8	54.6	2427	2448	15.6	22.3	505.3	940.2	-81.5	42.0	-3.2
26TH	339.00	38.0	55.4	2427	2448	15.6	22.6	467.5	885.5	-69.7	35.7	-3.1
27TH	352.00	38.4	60.0	2427	2448	15.8	24.5	429.5	830.1	-58.5	29.9	-2.9
28TH	365.00	39.3	70.4	2427	2448	16.2	28.7	391.1	770.0	-48.1	24.5	-2.7
29TH	378.00	40.1	80.7	2427	2448	16.5	33.0	351.8	699.7	-38.6	19.7	-2.4
30TH	391.00	41.0	91.0	2427	2448	16.9	37.2	311.7	619.0	-30.0	15.4	-2.0
31ST	404.00	41.9	101.3	2427	2448	17.2	41.4	270.7	528.0	-22.5	11.6	-1.6
32ND	417.00	42.7	97.2	2427	2448	17.6	39.7	228.8	426.6	-16.3	8.4	-1.1
33RD	430.00	45.1	82.6	2613	2287	17.3	36.1	186.1	329.4	-11.4	5.7	-.7
34TH	444.00	54.2	74.0	3173	2777	17.1	26.6	141.0	246.8	-7.4	3.4	-.2
35TH	461.00	51.9	70.1	2975	3202	17.5	21.9	86.8	172.9	-3.8	1.4	.2
36TH	478.00	27.2	49.6	2275	2340	12.0	21.2	34.9	102.7	-1.5	.4	-.2
37TH	491.00	1.6	44.7	1170	2340	1.3	19.1	7.6	53.1	-.5	.1	-.4
38TH	504.00	6.1	8.5	693	433	8.8	19.6	6.1	8.5	-.1	.0	.0

TABLE 7. SHEAR AND MOMENT DIAGRAMS : BASS BROTHERS OFFICE BUILDING - PHASE II, FT. WORTH
WIND DIRECTION 100 CONFIGURATION C REFERENCE PRESSURE 26.0 PSF GUST FACTOR 1.32

FLOOR	HEIGHT FT	X-FORCE KIPS	Y-FORCE KIPS	X-AREA SQ FT	Y-AREA SQ FT	X-PRESS PSF	Y-PRESS PSF	X-SHEAR KIPS	Y-SHEAR KIPS	X-MOMENT 1000-FT-KIPS	Y-MOMENT 1000-FT-KIPS	Z-MOMENT 1000-FT-KIPS
GRND	0.00	43.1	63.5	3240	3060	13.3	20.8	1651.9	2106.3	-566.5	417.8	16.7
2ND	18.00	41.4	53.9	2700	3050	15.3	17.7	1608.8	2042.7	-529.2	388.5	16.3
3RD	33.00	52.3	62.0	3600	4067	14.5	15.2	1567.4	1988.9	-498.9	364.7	15.9
4TH	53.00	30.1	48.8	2340	2448	12.9	19.9	1515.1	1926.9	-459.8	333.8	14.8
5TH	66.00	32.8	50.9	2340	2448	14.0	20.8	1484.9	1878.1	-435.0	314.3	14.4
6TH	79.00	35.4	53.0	2340	2448	15.1	21.7	1452.2	1827.2	-411.0	295.2	14.0
7TH	92.00	41.4	54.8	2427	2448	17.0	22.4	1416.8	1774.2	-387.5	276.6	13.5
8TH	105.00	42.6	53.4	2427	2448	17.6	21.8	1375.4	1719.4	-364.8	258.4	13.2
9TH	118.00	43.8	52.0	2427	2448	18.1	21.2	1332.8	1666.0	-342.8	240.8	12.9
10TH	131.00	45.1	50.6	2427	2448	18.6	20.7	1289.0	1614.0	-321.5	223.8	12.6
11TH	144.00	46.3	49.2	2427	2448	19.1	20.1	1243.9	1563.4	-300.9	207.3	12.4
12TH	157.00	47.6	47.8	2427	2448	19.6	19.5	1197.6	1514.2	-280.9	191.5	12.2
13TH	170.00	50.6	47.2	2427	2448	20.8	19.3	1150.0	1466.4	-261.5	176.2	12.0
14TH	183.00	53.5	46.6	2427	2448	22.1	19.1	1099.4	1419.2	-242.7	161.6	11.6
15TH	196.00	54.9	46.5	2427	2448	22.6	19.0	1045.8	1372.6	-224.6	147.6	10.8
16TH	209.00	52.7	46.6	2427	2448	21.7	19.0	991.0	1326.0	-207.0	134.4	9.9
17TH	222.00	50.6	46.7	2427	2448	20.8	19.1	938.2	1279.4	-190.1	121.9	9.0
18TH	235.00	48.4	46.8	2427	2448	20.0	19.1	887.7	1232.7	-173.8	110.0	8.0
19TH	248.00	46.7	47.0	2427	2448	19.3	19.2	839.2	1186.0	-158.1	98.8	6.9
20TH	261.00	46.7	47.6	2427	2448	19.3	19.4	792.5	1139.0	-142.9	88.2	5.9
21ST	274.00	46.7	48.2	2427	2448	19.3	19.7	745.8	1091.4	-128.4	78.2	5.0
22ND	287.00	46.7	48.8	2427	2448	19.3	19.9	699.1	1043.2	-114.6	68.8	4.1
23RD	300.00	46.7	49.4	2427	2448	19.2	20.2	652.3	994.4	-101.3	60.0	3.3
24TH	313.00	46.7	50.0	2427	2448	19.2	20.4	605.6	945.0	-88.7	51.8	2.6
25TH	326.00	46.7	50.6	2427	2448	19.2	20.6	558.9	895.1	-76.8	44.2	2.0
26TH	339.00	46.7	51.2	2427	2448	19.2	20.9	512.2	844.5	-65.4	37.3	1.4
27TH	352.00	46.7	56.1	2427	2448	19.2	22.9	465.6	793.4	-54.8	30.9	1.0
28TH	365.00	46.6	67.7	2427	2448	19.2	27.7	418.9	737.3	-44.9	25.2	.6
29TH	378.00	46.6	79.4	2427	2448	19.2	32.4	372.3	669.5	-35.7	20.0	.4
30TH	391.00	46.5	91.0	2427	2448	19.2	37.2	325.7	590.2	-27.5	15.5	.3
31ST	404.00	46.5	102.6	2427	2448	19.1	41.9	279.2	499.2	-20.4	11.6	.4
32ND	417.00	46.4	97.3	2427	2448	19.1	39.7	232.8	396.6	-14.6	8.2	.6
33RD	430.00	48.5	81.7	2613	2287	18.6	35.7	186.4	299.3	-10.1	5.5	.7
34TH	444.00	56.1	67.7	3173	2777	17.7	24.4	137.9	217.6	-6.5	3.2	.7
35TH	461.00	48.2	60.2	2975	3202	16.2	18.8	81.8	149.9	-3.4	1.4	.4
36TH	478.00	25.9	42.0	2275	2340	11.4	18.0	33.6	89.7	-1.3	.4	-.1
37TH	491.00	2.2	39.1	1170	2340	1.8	16.7	7.7	47.7	-.4	.1	-.4
38TH	504.00	5.6	8.6	693	433	8.1	19.8	5.6	8.6	-.1	.0	.0

TABLE 7. SHEAR AND MOMENT DIAGRAMS : BASS BROTHERS OFFICE BUILDING - PHASE II, FT. WORTH
WIND DIRECTION 110 CONFIGURATION C REFERENCE PRESSURE 26.0 PSF GUST FACTOR 1.32

FLOOR	HEIGHT FT	X-FORCE KIPS	Y-FORCE KIPS	X-AREA SQ FT	Y-AREA SQ FT	X-PRESS PSF	Y-PRESS PSF	X-SHEAR KIPS	Y-SHEAR KIPS	X-MOMENT	Y-MOMENT 1000-FT-KIPS	Z-MOMENT
GRND	0.00	42.5	57.0	3240	3060	13.1	18.6	1800.9	1713.5	-463.6	455.7	30.2
2ND	18.00	42.4	47.8	2700	3050	15.7	15.7	1758.4	1656.5	-433.2	423.7	29.8
3RD	33.00	56.6	54.6	3600	4067	15.7	13.4	1716.0	1608.7	-408.7	397.6	29.5
4TH	53.00	36.3	38.0	2340	2448	15.5	15.5	1659.4	1554.1	-377.1	363.8	28.2
5TH	66.00	39.1	40.4	2340	2448	16.7	16.5	1623.1	1516.1	-357.2	342.5	27.5
6TH	79.00	41.8	42.8	2340	2448	17.9	17.5	1584.1	1475.7	-337.7	321.7	26.7
7TH	92.00	46.1	44.8	2427	2448	19.0	18.3	1542.2	1432.9	-318.8	301.3	26.0
8TH	105.00	47.3	43.3	2427	2448	19.5	17.7	1496.2	1388.1	-300.5	281.6	25.3
9TH	118.00	48.6	41.7	2427	2448	20.0	17.0	1448.8	1344.9	-282.7	262.4	24.7
10TH	131.00	49.9	40.2	2427	2448	20.5	16.4	1400.2	1303.1	-265.5	243.9	24.1
11TH	144.00	51.1	38.7	2427	2448	21.1	15.8	1350.4	1262.9	-248.8	226.0	23.5
12TH	157.00	52.4	37.2	2427	2448	21.6	15.2	1299.2	1224.2	-232.6	208.8	22.9
13TH	170.00	54.2	36.5	2427	2448	22.3	14.9	1246.8	1187.0	-217.0	192.3	22.4
14TH	183.00	55.9	35.9	2427	2448	23.0	14.6	1192.6	1150.5	-201.8	176.4	21.6
15TH	196.00	56.8	35.5	2427	2448	23.4	14.5	1136.7	1114.7	-187.0	161.3	20.5
16TH	209.00	55.6	35.5	2427	2448	22.9	14.5	1080.0	1079.1	-172.8	146.9	19.3
17TH	222.00	54.5	35.4	2427	2448	22.5	14.5	1024.3	1043.7	-159.0	133.2	18.1
18TH	235.00	53.4	35.4	2427	2448	22.0	14.5	969.8	1008.2	-145.7	120.2	16.8
19TH	248.00	52.4	35.5	2427	2448	21.6	14.5	916.5	972.8	-132.8	108.0	15.4
20TH	261.00	52.0	35.9	2427	2448	21.4	14.7	864.1	937.4	-120.4	96.4	14.0
21ST	274.00	51.6	36.4	2427	2448	21.3	14.9	812.1	901.4	-108.4	85.5	12.7
22ND	287.00	51.2	36.8	2427	2448	21.1	15.0	760.5	865.1	-96.9	75.3	11.4
23RD	300.00	50.8	37.3	2427	2448	20.9	15.2	709.3	828.3	-85.9	65.7	10.2
24TH	313.00	50.4	37.7	2427	2448	20.8	15.4	658.5	791.0	-75.4	56.8	9.0
25TH	326.00	50.0	38.2	2427	2448	20.6	15.6	608.1	753.3	-65.4	48.6	7.9
26TH	339.00	49.6	38.6	2427	2448	20.5	15.8	558.1	715.1	-55.8	41.0	6.9
27TH	352.00	49.5	43.7	2427	2448	20.4	17.8	508.4	676.5	-46.8	34.1	5.9
28TH	365.00	49.8	55.7	2427	2448	20.5	22.7	458.9	632.9	-38.3	27.8	5.1
29TH	378.00	50.1	67.7	2427	2448	20.6	27.7	409.1	577.2	-30.4	22.2	4.4
30TH	391.00	50.3	79.7	2427	2448	20.7	32.6	359.1	509.5	-23.3	17.2	3.8
31ST	404.00	50.6	91.8	2427	2448	20.9	37.5	308.7	429.7	-17.2	12.8	3.4
32ND	417.00	50.9	87.0	2427	2448	21.0	35.5	258.1	338.0	-12.2	9.1	3.2
33RD	430.00	54.1	71.7	2613	2287	20.7	31.3	207.2	251.0	-8.4	6.1	2.9
34TH	444.00	63.2	56.1	3173	2777	19.9	20.2	153.2	179.3	-5.4	3.6	2.4
35TH	461.00	52.3	48.1	2975	3202	17.6	15.0	90.0	123.2	-2.8	1.5	1.5
36TH	478.00	27.3	33.7	2275	2340	12.0	14.4	37.6	75.1	-1.1	.4	.7
37TH	491.00	5.7	33.2	1170	2340	4.9	14.2	10.3	41.4	-.4	.1	-.0
38TH	504.00	4.6	8.2	693	433	6.6	19.0	4.6	8.2	-.1	.0	.0

TABLE 7. SHEAR AND MOMENT DIAGRAMS : BASS BROTHERS OFFICE BUILDING - PHASE II, FT. WORTH
WIND DIRECTION 120 CONFIGURATION C REFERENCE PRESSURE 26.0 PSF GUST FACTOR 1.32

FLOOR	HEIGHT FT	X-FORCE KIPS	Y-FORCE KIPS	X-AREA SQ FT	Y-AREA SQ FT	X-PRESS PSF	Y-PRESS PSF	X-SHEAR KIPS	Y-SHEAR KIPS	X-MOMENT	Y-MOMENT	Z-MOMENT
										1000-FT-KIPS		
GRND	0.00	38.1	43.8	3240	3060	11.8	14.3	1848.6	1005.3	-257.5	481.2	38.6
2ND	18.00	38.4	33.5	2700	3050	14.2	11.0	1810.5	961.5	-239.8	448.3	38.5
3RD	33.00	49.1	37.2	3600	4067	13.6	9.1	1772.2	928.0	-225.6	421.4	38.2
4TH	53.00	33.6	26.6	2340	2448	14.4	10.9	1723.0	890.9	-207.4	386.5	37.1
5TH	66.00	36.9	28.6	2340	2448	15.8	11.7	1689.4	864.3	-196.0	364.3	36.2
6TH	79.00	40.1	30.7	2340	2448	17.2	12.5	1652.5	835.7	-185.0	342.6	35.4
7TH	92.00	43.6	32.2	2427	2448	18.0	13.2	1612.4	805.0	-174.3	321.4	34.5
8TH	105.00	45.7	30.0	2427	2448	18.8	12.2	1568.8	772.8	-164.0	300.7	33.7
9TH	118.00	47.9	27.8	2427	2448	19.7	11.3	1523.1	742.8	-154.2	280.6	32.8
10TH	131.00	50.1	25.5	2427	2448	20.6	10.4	1475.1	715.0	-144.7	261.1	32.0
11TH	144.00	52.3	23.3	2427	2448	21.5	9.5	1425.0	689.5	-135.6	242.2	31.3
12TH	157.00	54.5	21.1	2427	2448	22.4	8.6	1372.7	666.2	-126.8	224.1	30.5
13TH	170.00	55.7	20.5	2427	2448	23.0	8.4	1318.3	645.2	-118.3	206.6	29.9
14TH	183.00	57.0	19.9	2427	2448	23.5	8.1	1262.6	624.7	-110.0	189.8	29.0
15TH	196.00	57.6	19.4	2427	2448	23.7	7.9	1205.6	604.8	-102.0	173.7	28.0
16TH	209.00	56.8	19.2	2427	2448	23.4	7.9	1148.0	585.4	-94.3	158.5	26.8
17TH	222.00	55.9	19.1	2427	2448	23.1	7.8	1091.3	566.2	-86.8	143.9	25.5
18TH	235.00	55.1	19.0	2427	2448	22.7	7.8	1035.3	547.0	-79.5	130.1	24.0
19TH	248.00	54.4	18.9	2427	2448	22.4	7.7	980.2	528.1	-72.6	117.0	22.4
20TH	261.00	54.2	19.2	2427	2448	22.3	7.8	925.8	509.1	-65.8	104.6	20.6
21ST	274.00	54.0	19.5	2427	2448	22.3	8.0	871.5	489.9	-59.3	92.9	19.0
22ND	287.00	53.8	19.7	2427	2448	22.2	8.1	817.5	470.4	-53.1	81.9	17.4
23RD	300.00	53.6	20.0	2427	2448	22.1	8.2	763.7	450.7	-47.1	71.6	15.9
24TH	313.00	53.4	20.3	2427	2448	22.0	8.3	710.2	430.7	-41.4	62.1	14.6
25TH	326.00	53.1	20.6	2427	2448	21.9	8.4	656.8	410.4	-35.9	53.2	13.3
26TH	339.00	52.9	20.8	2427	2448	21.8	8.5	603.7	389.8	-30.7	45.0	12.1
27TH	352.00	52.9	23.4	2427	2448	21.8	9.6	550.7	369.0	-25.8	37.5	11.0
28TH	365.00	53.1	29.5	2427	2448	21.9	12.1	497.9	345.6	-21.1	30.7	10.0
29TH	378.00	53.3	35.6	2427	2448	22.0	14.5	444.8	316.1	-16.8	24.5	9.0
30TH	391.00	53.5	41.7	2427	2448	22.1	17.0	391.5	280.4	-12.9	19.1	8.1
31ST	404.00	53.7	47.8	2427	2448	22.1	19.5	337.9	238.7	-9.6	14.4	7.2
32ND	417.00	54.0	46.5	2427	2448	22.2	19.0	284.2	190.9	-6.8	10.3	6.4
33RD	430.00	57.9	40.6	2613	2287	22.2	17.8	230.2	144.3	-4.6	7.0	5.5
34TH	444.00	68.6	36.3	3173	2777	21.6	13.1	172.3	103.7	-2.9	4.2	4.6
35TH	461.00	58.1	30.9	2975	3202	19.5	9.7	103.7	67.4	-1.4	1.8	3.4
36TH	478.00	31.4	18.3	2275	2340	13.8	7.8	45.7	36.5	-.5	.5	2.2
37TH	491.00	9.8	14.3	1170	2340	8.3	6.1	14.2	18.2	-.2	.2	.9
38TH	504.00	4.5	3.9	693	433	6.5	9.0	4.5	3.9	-.0	.0	.1

TABLE 7. SHEAR AND MOMENT DIAGRAMS ; BASS BROTHERS OFFICE BUILDING - PHASE II, FT. WORTH
WIND DIRECTION 130 CONFIGURATION C REFERENCE PRESSURE 26.0 PSF GUST FACTOR 1.32

FLOOR	HEIGHT FT	X-FORCE KIPS	Y-FORCE KIPS	X-AREA SQ FT	Y-AREA SQ FT	X-PRESS PSF	Y-PRESS PSF	X-SHEAR KIPS	Y-SHEAR KIPS	X-MOMENT 1000-FT-KIPS	Y-MOMENT 1000-FT-KIPS	Z-MOMENT 1000-FT-KIPS
GRND	0.00	32.5	40.4	3240	3060	10.0	13.2	1763.5	367.9	-66.8	485.5	30.1
2ND	18.00	29.9	27.0	2700	3050	11.1	8.8	1731.0	327.5	-60.6	454.0	30.3
3RD	33.00	34.3	23.6	3600	4067	9.5	5.8	1701.1	300.5	-55.9	428.3	30.3
4TH	53.00	28.4	12.6	2340	2448	12.1	5.1	1666.7	277.0	-50.1	394.6	29.7
5TH	66.00	31.1	15.7	2340	2448	13.3	6.4	1638.4	264.4	-46.6	373.1	28.9
6TH	79.00	33.8	18.9	2340	2448	14.4	7.7	1607.3	248.7	-43.2	352.0	28.1
7TH	92.00	38.8	21.3	2427	2448	16.0	8.7	1573.5	229.8	-40.1	331.3	27.2
8TH	105.00	40.4	18.9	2427	2448	16.6	7.7	1534.7	208.5	-37.3	311.1	26.3
9TH	118.00	41.9	16.4	2427	2448	17.3	6.7	1494.3	189.6	-34.7	291.5	25.5
10TH	131.00	43.5	14.0	2427	2448	17.9	5.7	1452.4	173.1	-32.3	272.3	24.7
11TH	144.00	45.1	11.5	2427	2448	18.6	4.7	1408.9	159.2	-30.2	253.7	24.1
12TH	157.00	46.7	9.1	2427	2448	19.2	3.7	1363.7	147.6	-28.2	235.7	23.5
13TH	170.00	47.0	8.2	2427	2448	19.4	3.3	1317.1	138.6	-26.3	218.3	23.0
14TH	183.00	47.3	7.2	2427	2448	19.5	2.9	1270.1	130.4	-24.6	201.4	22.3
15TH	196.00	47.7	5.7	2427	2448	19.7	2.3	1222.8	123.2	-22.9	185.2	21.6
16TH	209.00	48.3	4.4	2427	2448	19.9	1.8	1175.1	117.5	-21.4	169.7	20.8
17TH	222.00	48.9	3.2	2427	2448	20.1	1.3	1126.8	113.0	-19.9	154.7	19.8
18TH	235.00	49.5	1.9	2427	2448	20.4	.8	1077.9	109.9	-18.4	140.4	18.7
19TH	248.00	50.1	1.0	2427	2448	20.7	.4	1028.4	108.0	-17.0	126.7	17.4
20TH	261.00	51.0	1.4	2427	2448	21.0	.6	978.3	107.0	-15.6	113.6	16.0
21ST	274.00	51.9	1.9	2427	2448	21.4	.8	927.3	105.5	-14.2	101.2	14.8
22ND	287.00	52.8	2.4	2427	2448	21.8	1.0	875.3	103.6	-12.9	89.5	13.7
23RD	300.00	53.7	2.8	2427	2448	22.1	1.1	822.5	101.3	-11.5	78.5	12.7
24TH	313.00	54.6	3.3	2427	2448	22.5	1.3	768.8	98.5	-10.2	68.1	11.9
25TH	326.00	55.5	3.7	2427	2448	22.9	1.5	714.2	95.2	-9.0	58.5	11.2
26TH	339.00	56.4	4.2	2427	2448	23.2	1.7	658.7	91.5	-7.8	49.6	10.6
27TH	352.00	57.1	4.7	2427	2448	23.5	1.9	602.2	87.3	-6.6	41.4	10.1
28TH	365.00	57.5	5.3	2427	2448	23.7	2.2	545.1	82.6	-5.5	33.9	9.7
29TH	378.00	57.9	5.9	2427	2448	23.9	2.4	487.6	77.3	-4.5	27.2	9.2
30TH	391.00	58.3	6.5	2427	2448	24.0	2.7	429.7	71.4	-3.5	21.3	8.6
31ST	404.00	58.7	7.1	2427	2448	24.2	2.9	371.4	64.9	-2.6	16.0	7.9
32ND	417.00	59.1	9.2	2427	2448	24.3	3.7	312.8	57.8	-1.8	11.6	7.1
33RD	430.00	62.4	12.6	2613	2287	23.9	5.5	253.7	48.6	-1.1	7.9	6.2
34TH	444.00	72.9	19.3	3173	2777	23.0	7.0	191.3	36.0	-.5	4.8	5.3
35TH	461.00	63.1	15.9	2975	3202	21.2	5.0	118.4	16.7	-.1	2.2	4.2
36TH	478.00	35.8	4.8	2275	2340	15.7	2.1	55.4	.8	.1	.7	3.1
37TH	491.00	13.9	-2.3	1170	2340	11.9	-1.0	19.6	-4.0	.0	.2	1.6
38TH	504.00	5.7	-1.7	693	433	8.2	-4.0	5.7	-1.7	.0	.0	.1

TABLE 7. SHEAR AND MOMENT DIAGRAMS : BASS BROTHERS OFFICE BUILDING - PHASE II, FT. WORTH
WIND DIRECTION 140 CONFIGURATION C REFERENCE PRESSURE 26.0 PSF GUST FACTOR 1.32

FLOOR	HEIGHT FT	X-FORCE KIPS	Y-FORCE KIPS	X-AREA SQ FT	Y-AREA SQ FT	X-PRESS PSF	Y-PRESS PSF	X-SHEAR KIPS	Y-SHEAR KIPS	X-MOMENT 1000-FT-KIPS	Y-MOMENT 1000-FT-KIPS	Z-MOMENT 1000-FT-KIPS
GRND	0.00	27.9	30.7	3240	3060	8.6	10.0	1855.7	152.0	-22.3	519.1	14.8
2ND	18.00	27.1	18.8	2700	3050	10.0	6.2	1827.9	121.3	-19.8	485.9	15.2
3RD	33.00	30.9	12.3	3600	4067	8.6	3.0	1800.8	102.4	-18.1	458.7	15.0
4TH	53.00	28.6	4.5	2340	2448	12.2	1.8	1769.9	90.1	-16.2	423.0	14.6
5TH	66.00	30.4	7.2	2340	2448	13.0	2.9	1741.4	85.6	-15.0	400.2	14.2
6TH	79.00	32.3	9.9	2340	2448	13.8	4.0	1710.9	78.5	-14.0	377.7	13.7
7TH	92.00	40.2	12.0	2427	2448	16.6	4.9	1678.7	68.6	-13.0	355.7	13.2
8TH	105.00	41.7	9.4	2427	2448	17.2	3.9	1638.5	56.6	-12.2	334.1	12.9
9TH	118.00	43.3	6.9	2427	2448	17.8	2.8	1596.7	47.1	-11.5	313.1	12.6
10TH	131.00	44.9	4.3	2427	2448	18.5	1.8	1553.4	40.3	-11.0	292.6	12.5
11TH	144.00	46.4	1.7	2427	2448	19.1	.7	1508.6	36.0	-10.5	272.7	12.4
12TH	157.00	48.0	-.8	2427	2448	19.8	-.3	1462.1	34.3	-10.0	253.4	12.4
13TH	170.00	48.8	-.7	2427	2448	20.1	-.3	1414.1	35.1	-9.6	234.7	12.5
14TH	183.00	49.6	-.7	2427	2448	20.5	-.3	1365.3	35.8	-9.1	216.6	12.5
15TH	196.00	50.6	-1.6	2427	2448	20.8	-.7	1315.7	36.5	-8.6	199.2	12.3
16TH	209.00	51.6	-2.2	2427	2448	21.3	-.9	1265.1	38.1	-8.1	182.4	12.0
17TH	222.00	52.7	-2.8	2427	2448	21.7	-1.2	1213.5	40.3	-7.6	166.3	11.6
18TH	235.00	53.8	-3.4	2427	2448	22.2	-1.4	1160.7	43.2	-7.1	150.9	10.9
19TH	248.00	54.9	-3.7	2427	2448	22.6	-1.5	1106.9	46.6	-6.5	136.2	10.1
20TH	261.00	55.7	-2.9	2427	2448	23.0	-1.2	1052.0	50.3	-5.9	122.1	9.2
21ST	274.00	56.6	-2.2	2427	2448	23.3	-.9	996.3	53.2	-5.2	108.8	8.4
22ND	287.00	57.4	-1.4	2427	2448	23.7	-.6	939.7	55.4	-4.5	96.2	7.7
23RD	300.00	58.3	-.6	2427	2448	24.0	-.3	882.2	56.8	-3.8	84.4	7.1
24TH	313.00	59.2	.2	2427	2448	24.4	.1	823.9	57.4	-3.0	73.3	6.6
25TH	326.00	60.0	.9	2427	2448	24.7	.4	764.8	57.3	-2.3	63.0	6.3
26TH	339.00	60.9	1.7	2427	2448	25.1	.7	704.8	56.3	-1.5	53.4	6.0
27TH	352.00	61.4	3.2	2427	2448	25.3	1.3	643.9	54.6	-.8	44.6	5.8
28TH	365.00	61.4	5.8	2427	2448	25.3	2.4	582.5	51.4	-.1	36.7	5.7
29TH	378.00	61.4	8.5	2427	2448	25.3	3.5	521.1	45.6	.5	29.5	5.5
30TH	391.00	61.4	11.1	2427	2448	25.3	4.5	459.7	37.1	1.0	23.1	5.3
31ST	404.00	61.4	13.7	2427	2448	25.3	5.6	398.3	26.0	1.4	17.5	5.0
32ND	417.00	61.4	14.3	2427	2448	25.3	5.9	336.9	12.3	1.7	12.8	4.7
33RD	430.00	65.3	14.1	2613	2287	25.0	6.2	275.5	-2.1	1.8	8.8	4.3
34TH	444.00	77.3	13.6	3173	2777	24.3	4.9	210.2	-16.2	1.6	5.4	3.8
35TH	461.00	68.6	5.6	2375	3202	23.1	1.8	133.0	-29.8	1.2	2.5	3.3
36TH	478.00	41.7	-7.8	2275	2349	18.3	-3.3	64.3	-35.4	.7	.8	2.8
37TH	491.00	16.3	-20.5	1179	2340	13.9	-8.7	22.6	-27.6	.3	.2	1.7
38TH	504.00	6.3	-7.2	693	433	9.1	-16.5	6.3	-7.2	.0	.0	.2

TABLE 7. SHEAR AND MOMENT DIAGRAMS : BASS BROTHERS OFFICE BUILDING - PHASE II, FT. WORTH
WIND DIRECTION 150 CONFIGURATION C REFERENCE PRESSURE 26.0 PSF GUST FACTOR 1.32

FLOOR	HEIGHT FT	X-FORCE KIPS	Y-FORCE KIPS	X-AREA SQ FT	Y-AREA SQ FT	X-PRESS PSF	Y-PRESS PSF	X-SHEAR KIPS	Y-SHEAR KIPS	X-MOMENT 1000-FT-KIPS	Y-MOMENT 1000-FT-KIPS	Z-MOMENT 1000-FT-KIPS
GRND	0.00	25.3	21.6	3240	3060	7.8	7.1	1904.9	109.3	-37.6	543.8	-.1
2ND	18.00	23.9	12.4	2700	3050	8.8	4.1	1879.6	87.7	-35.8	509.7	.2
3RD	33.00	25.6	3.5	3600	4067	7.1	.9	1855.8	75.3	-34.6	481.7	-.0
4TH	53.00	25.7	-3.9	2340	2448	11.0	-1.6	1830.2	71.8	-33.1	444.9	-.4
5TH	66.00	27.3	-1.9	2340	2448	11.7	-.8	1804.5	75.7	-32.2	421.2	-.8
6TH	79.00	28.9	.1	2340	2448	12.4	.1	1777.2	77.6	-31.2	398.0	-1.1
7TH	92.00	37.4	1.7	2427	2448	15.4	.7	1748.2	77.5	-30.2	375.0	-1.4
8TH	105.00	39.8	.1	2427	2448	16.4	.0	1710.8	75.8	-29.2	352.6	-1.3
9TH	118.00	42.2	-1.6	2427	2448	17.4	-.6	1671.0	75.7	-28.2	330.6	-1.2
10TH	131.00	44.6	-3.3	2427	2448	18.4	-1.3	1628.8	77.3	-27.2	309.1	-.9
11TH	144.00	47.0	-4.9	2427	2448	19.4	-2.0	1584.2	80.5	-26.2	288.2	-.6
12TH	157.00	49.4	-6.5	2427	2448	20.4	-2.7	1537.2	85.4	-25.1	268.0	-.1
13TH	170.00	50.8	-5.1	2427	2448	20.9	-2.1	1487.8	92.0	-23.9	248.3	.5
14TH	183.00	52.2	-3.9	2427	2448	21.5	-1.6	1437.0	97.1	-22.7	229.3	.9
15TH	196.00	53.5	-3.7	2427	2448	22.0	-1.5	1384.8	101.0	-21.4	210.9	1.1
16TH	209.00	54.3	-3.4	2427	2448	22.4	-1.4	1331.3	104.7	-20.1	193.3	1.3
17TH	222.00	55.2	-3.1	2427	2448	22.7	-1.3	1277.0	108.1	-18.7	176.3	1.2
18TH	235.00	56.0	-2.7	2427	2448	23.1	-1.1	1221.9	111.2	-17.3	160.1	.9
19TH	248.00	56.9	-2.3	2427	2448	23.4	-.9	1165.9	113.9	-15.8	144.6	.4
20TH	261.00	57.8	-1.3	2427	2448	23.8	-.5	1109.0	116.2	-14.3	129.8	-.2
21ST	274.00	58.8	-.4	2427	2448	24.2	-.1	1051.2	117.5	-12.8	115.7	-.7
22ND	287.00	59.7	.6	2427	2448	24.6	.2	992.4	117.8	-11.3	102.5	-1.0
23RD	300.00	60.7	1.5	2427	2448	25.0	.6	932.6	117.3	-9.7	89.9	-1.2
24TH	313.00	61.6	2.5	2427	2448	25.4	1.0	872.0	115.7	-8.2	78.2	-1.4
25TH	326.00	62.6	3.4	2427	2448	25.8	1.4	810.3	113.2	-6.7	67.3	-1.3
26TH	339.00	63.5	4.4	2427	2448	26.2	1.8	747.8	109.8	-5.3	57.2	-1.2
27TH	352.00	64.2	6.4	2427	2448	26.4	2.6	684.2	105.4	-3.9	47.8	-.9
28TH	365.00	64.3	10.2	2427	2448	26.5	4.1	620.0	98.9	-2.6	39.4	-.6
29TH	378.00	64.5	13.9	2427	2448	26.6	5.7	555.7	88.8	-1.3	31.7	-.2
30TH	391.00	64.6	17.6	2427	2448	26.6	7.2	491.3	74.9	-.3	24.9	.2
31ST	404.00	64.8	21.3	2427	2448	26.7	8.7	426.6	57.3	.6	19.0	.6
32ND	417.00	64.9	21.4	2427	2448	26.8	8.8	361.8	36.0	1.2	13.8	1.0
33RD	430.00	70.1	20.5	2613	2287	26.8	9.0	296.9	14.6	1.5	9.5	1.3
34TH	444.00	83.7	19.3	3173	2777	26.4	7.0	226.8	-6.0	1.6	5.9	1.6
35TH	461.00	70.9	13.6	2975	3202	23.8	4.2	143.1	-25.3	1.3	2.7	1.9
36TH	478.00	46.2	-6.4	2275	2340	20.3	-2.8	72.2	-38.9	.8	.9	2.4
37TH	491.00	18.6	-24.8	1179	2340	15.9	-10.6	26.0	-32.4	.3	.3	1.8
38TH	504.00	7.4	-7.6	693	433	10.7	-17.6	7.4	-7.6	.0	.0	.2

TABLE 7. SHEAR AND MOMENT DIAGRAMS : BASS BROTHERS OFFICE BUILDING - PHASE II, FT. WORTH
WIND DIRECTION 160 CONFIGURATION C REFERENCE PRESSURE 26.0 PSF GUST FACTOR 1.32

FLOOR	HEIGHT FT	X-FORCE KIPS	Y-FORCE KIPS	X-AREA SQ FT	Y-AREA SQ FT	X-PRESS PSF	Y-PRESS PSF	X-SHEAR KIPS	Y-SHEAR KIPS	X-MOMENT	Y-MOMENT	Z-MOMENT
										1000-FT-KIPS		
GRND	0.00	27.1	2.2	3240	3060	8.4	.7	1971.3	-341.9	77.7	562.7	-13.0
2ND	18.00	22.4	-5.1	2700	3050	8.3	-1.7	1944.1	-344.1	71.5	527.4	-12.7
3RD	33.00	29.6	-13.3	3600	4067	8.2	-3.3	1921.7	-339.0	66.4	498.4	-12.9
4TH	53.00	28.7	-11.5	2340	2448	12.3	-4.7	1892.1	-325.7	59.8	460.3	-13.2
5TH	66.00	30.1	-9.9	2340	2448	12.9	-4.1	1863.4	-314.2	55.6	435.9	-13.4
6TH	79.00	31.5	-8.3	2340	2448	13.4	-3.4	1833.4	-304.2	51.6	411.9	-13.5
7TH	92.00	38.0	-7.2	2427	2448	15.6	-2.9	1801.9	-295.9	47.7	388.2	-13.5
8TH	105.00	40.7	-9.7	2427	2448	16.8	-4.0	1763.9	-288.7	43.9	365.0	-13.3
9TH	118.00	43.4	-12.3	2427	2448	17.9	-5.0	1723.3	-279.0	40.2	342.4	-12.9
10TH	131.00	46.1	-14.8	2427	2448	19.0	-6.0	1679.9	-266.7	36.6	320.3	-12.5
11TH	144.00	48.8	-17.3	2427	2448	20.1	-7.1	1633.9	-251.9	33.3	298.7	-11.9
12TH	157.00	51.5	-19.8	2427	2448	21.2	-8.1	1585.1	-234.6	30.1	277.8	-11.2
13TH	170.00	52.9	-18.0	2427	2448	21.8	-7.3	1533.6	-214.8	27.2	257.5	-10.5
14TH	183.00	54.4	-16.4	2427	2448	22.4	-6.7	1480.7	-196.8	24.5	237.9	-9.8
15TH	196.00	55.6	-15.9	2427	2448	22.9	-6.5	1426.3	-180.5	22.1	219.0	-9.3
16TH	209.00	56.1	-15.1	2427	2448	23.1	-6.2	1370.8	-164.6	19.8	200.9	-8.8
17TH	222.00	56.6	-14.3	2427	2448	23.3	-5.8	1314.7	-149.5	17.8	183.4	-8.3
18TH	235.00	57.2	-13.4	2427	2448	23.6	-5.5	1258.0	-135.3	15.9	166.7	-8.0
19TH	248.00	57.8	-12.6	2427	2448	23.8	-5.2	1200.8	-121.8	14.2	150.7	-7.8
20TH	261.00	58.6	-11.8	2427	2448	24.2	-4.8	1143.1	-109.2	12.7	135.5	-7.6
21ST	274.00	59.5	-11.0	2427	2448	24.5	-4.5	1084.4	-97.4	11.4	121.0	-7.3
22ND	287.00	60.3	-10.2	2427	2448	24.8	-4.2	1025.0	-86.4	10.2	107.3	-7.0
23RD	300.00	61.1	-9.4	2427	2448	25.2	-3.8	964.7	-76.2	9.1	94.3	-6.6
24TH	313.00	62.0	-8.5	2427	2448	25.5	-3.5	903.5	-66.8	8.2	82.2	-6.1
25TH	326.00	62.8	-7.7	2427	2448	25.9	-3.2	841.8	-58.3	7.4	70.8	-5.5
26TH	339.00	63.6	-6.9	2427	2448	26.2	-2.8	778.8	-50.6	6.7	60.3	-4.8
27TH	352.00	64.4	-5.4	2427	2448	26.6	-2.2	715.1	-43.7	6.1	50.6	-4.1
28TH	365.00	65.2	-3.0	2427	2448	26.9	-1.2	650.7	-38.2	5.6	41.7	-3.3
29TH	378.00	66.0	-.5	2427	2448	27.2	-.2	585.4	-35.2	5.1	33.7	-2.5
30TH	391.00	66.8	1.9	2427	2448	27.5	.8	519.4	-34.7	4.6	26.5	-1.7
31ST	404.00	67.6	4.4	2427	2448	27.9	1.8	452.6	-36.7	4.2	20.2	-1.0
32ND	417.00	68.4	4.4	2427	2448	28.2	1.8	385.0	-41.1	3.7	14.7	-.3
33RD	430.00	74.5	2.2	2613	2287	28.5	1.0	316.7	-45.5	3.1	10.2	.4
34TH	444.00	89.9	-.7	3173	2777	28.3	-.3	242.1	-47.7	2.4	6.3	1.1
35TH	461.00	75.2	-1.0	2975	3292	25.3	-.3	152.3	-47.9	1.6	2.9	1.9
36TH	478.00	49.3	-11.5	2275	2340	21.6	-4.9	77.1	-46.1	.8	1.0	2.4
37TH	491.00	19.4	-27.5	1170	2340	16.6	-11.7	27.9	-34.5	.3	.3	1.9
38TH	504.00	8.5	-7.1	693	433	12.2	-16.3	8.5	-7.1	.0	.1	.2

TABLE 7. SHEAR AND MOMENT DIAGRAMS : BASS BROTHERS OFFICE BUILDING - PHASE II, FT WORTH
WIND DIRECTION 170 CONFIGURATION C REFERENCE PRESSURE 26.0 PSF GUST FACTOR 1.32

FLOOR	HEIGHT FT	X-FORCE KIPS	Y-FORCE KIPS	X-AREA SQ FT	Y-AREA SQ FT	X-PRESS PSF	Y-PRESS PSF	X-SHEAR KIPS	Y-SHEAR KIPS	X-MOMENT 1000-FT-KIPS	Y-MOMENT 1000-FT-KIPS	Z-MOMENT 1000-FT-KIPS
GRND	0.00	15.5	-4.7	3240	3060	4.8	-1.5	1486.8	-596.4	154.0	438.4	-1.9
2ND	18.00	10.7	-10.1	2700	3050	4.0	-3.3	1471.3	-591.7	143.3	411.8	-1.7
3RD	33.00	17.3	-16.1	3600	4067	4.8	-4.0	1460.6	-581.6	134.5	389.8	-1.9
4TH	53.00	21.4	-12.5	2340	2448	9.1	-5.1	1443.3	-565.5	123.0	360.8	-2.2
5TH	66.00	21.4	-11.4	2340	2448	9.2	-4.7	1421.9	-553.0	115.8	342.2	-2.4
6TH	79.00	21.5	-10.3	2340	2448	9.2	-4.2	1400.5	-541.6	108.6	323.8	-2.5
7TH	92.00	27.6	-9.7	2427	2448	11.4	-4.0	1379.0	-531.3	101.7	305.7	-2.7
8TH	105.00	29.8	-12.9	2427	2448	12.3	-5.3	1351.4	-521.6	94.8	288.0	-2.6
9TH	118.00	32.1	-16.1	2427	2448	13.2	-6.6	1321.5	-508.7	88.1	270.6	-2.5
10TH	131.00	34.4	-19.2	2427	2448	14.2	-7.9	1289.4	-492.7	81.6	253.7	-2.2
11TH	144.00	36.6	-22.4	2427	2448	15.1	-9.2	1255.1	-473.5	75.3	237.1	-1.9
12TH	157.00	38.9	-25.5	2427	2448	16.0	-10.4	1218.4	-451.1	69.3	221.0	-1.6
13TH	170.00	39.4	-23.9	2427	2448	16.2	-9.8	1179.5	-425.5	63.6	205.4	-1.1
14TH	183.00	39.9	-22.4	2427	2448	16.4	-9.1	1140.2	-401.6	58.3	190.4	-.8
15TH	196.00	40.3	-21.4	2427	2448	16.6	-8.8	1100.3	-379.2	53.2	175.8	-.5
16TH	209.00	40.3	-20.7	2427	2448	16.6	-8.4	1060.0	-357.8	48.4	161.8	-.4
17TH	222.00	40.4	-19.9	2427	2448	16.7	-8.1	1019.7	-337.1	43.9	148.2	-.3
18TH	235.00	40.5	-19.2	2427	2448	16.7	-7.8	979.3	-317.2	39.6	135.3	-.3
19TH	248.00	40.9	-18.5	2427	2448	16.8	-7.6	938.8	-298.1	35.6	122.8	-.5
20TH	261.00	41.8	-18.5	2427	2448	17.2	-7.6	898.0	-279.5	31.9	110.8	-.7
21ST	274.00	42.8	-18.5	2427	2448	17.6	-7.5	856.2	-261.0	28.3	99.4	-.8
22ND	287.00	43.8	-18.4	2427	2448	18.1	-7.5	813.4	-242.5	25.1	88.6	-.8
23RD	300.00	44.9	-18.4	2427	2448	18.5	-7.5	769.6	-224.1	22.0	78.3	-.8
24TH	313.00	45.9	-18.4	2427	2448	18.9	-7.5	724.7	-205.7	19.2	68.6	-.7
25TH	326.00	46.9	-18.3	2427	2448	19.3	-7.5	678.8	-187.4	16.7	59.5	-.5
26TH	339.00	48.0	-18.3	2427	2448	19.8	-7.5	631.9	-169.1	14.4	50.9	-.2
27TH	352.00	49.0	-17.2	2427	2448	20.2	-7.0	583.9	-150.8	12.3	43.0	.2
28TH	365.00	50.1	-14.7	2427	2448	20.7	-6.0	534.9	-133.5	10.4	35.8	.6
29TH	378.00	51.2	-12.2	2427	2448	21.1	-5.0	484.8	-118.8	8.8	29.1	.9
30TH	391.00	52.3	-9.7	2427	2448	21.6	-3.9	433.6	-106.6	7.3	23.2	1.3
31ST	404.00	53.4	-7.1	2427	2448	22.0	-2.9	381.2	-97.0	6.0	17.9	1.6
32ND	417.00	54.5	-7.1	2427	2448	22.5	-2.9	327.8	-89.9	4.8	13.3	1.9
33RD	430.00	59.3	-10.6	2613	2287	22.7	-4.6	273.3	-82.7	3.7	9.4	2.1
34TH	444.00	72.0	-16.3	3173	2777	22.7	-5.9	214.0	-72.1	2.6	6.0	2.3
35TH	461.00	64.7	-14.9	2975	3202	21.8	-4.6	142.0	-55.8	1.5	2.9	2.6
36TH	478.00	45.9	-13.5	2275	2340	20.2	-5.8	77.3	-41.0	.7	1.1	2.4
37TH	491.00	19.8	-22.5	1170	2340	17.0	-9.6	31.4	-27.5	.2	.4	1.7
38TH	504.00	11.6	-5.0	693	433	16.7	-11.6	11.6	-5.0	.0	.1	.2

TABLE 7. SHEAR AND MOMENT DIAGRAMS : BASS BROTHERS OFFICE BUILDING - PHASE II, FT. WORTH
WIND DIRECTION 180 CONFIGURATION C REFERENCE PRESSURE 26.0 PSF GUST FACTOR 1.32

FLOOR	HEIGHT FT	X-FORCE KIPS	Y-FORCE KIPS	X-AREA SQ FT	Y-AREA SQ FT	X-PRESS PSF	Y-PRESS PSF	X-SHEAR KIPS	Y-SHEAR KIPS	X-MOMENT 1000-FT-KIPS	Y-MOMENT 1000-FT-KIPS	Z-MOMENT 1000-FT-KIPS
GRND	0.00	1.6	-14.9	3240	3060	.5	-4.9	1076.7	-752.1	193.3	344.0	-.5
2ND	18.00	.9	-20.3	2700	3050	.3	-6.7	1075.1	-737.2	179.9	324.6	-.5
3RD	33.00	4.2	-26.3	3600	4067	1.2	-6.5	1074.2	-716.8	169.0	308.5	-.7
4TH	53.00	10.6	-17.8	2340	2448	4.5	-7.3	1070.0	-690.5	154.9	287.0	-.9
5TH	66.00	10.7	-17.5	2340	2448	4.6	-7.1	1059.3	-672.7	146.1	273.2	-.9
6TH	79.00	10.8	-17.1	2340	2448	4.6	-7.0	1048.6	-655.2	137.4	259.5	-1.0
7TH	92.00	15.7	-16.9	2427	2448	6.5	-6.9	1037.8	-638.1	129.0	245.9	-1.1
8TH	105.00	17.3	-18.2	2427	2448	7.1	-7.4	1022.1	-621.2	120.8	232.5	-1.0
9TH	118.00	18.9	-19.5	2427	2448	7.8	-8.0	1004.8	-602.9	112.9	219.4	-.8
10TH	131.00	20.5	-20.8	2427	2448	8.5	-8.5	985.9	-583.5	105.2	206.4	-.5
11TH	144.00	22.1	-22.0	2427	2448	9.1	-9.0	965.3	-562.7	97.7	193.7	-.2
12TH	157.00	23.7	-23.3	2427	2448	9.8	-9.5	943.2	-540.7	90.6	181.3	.3
13TH	170.00	25.4	-22.3	2427	2448	10.5	-9.1	919.5	-517.4	83.7	169.2	.8
14TH	183.00	27.1	-21.5	2427	2448	11.2	-8.8	894.0	-495.1	77.1	157.4	1.2
15TH	196.00	28.3	-21.4	2427	2448	11.7	-8.7	866.9	-473.5	70.8	146.0	1.4
16TH	209.00	28.5	-21.1	2427	2448	11.8	-8.6	838.6	-452.2	64.8	134.9	1.7
17TH	222.00	28.7	-20.8	2427	2448	11.8	-8.5	810.1	-431.1	59.0	124.2	1.8
18TH	235.00	28.9	-20.5	2427	2448	11.9	-8.4	781.3	-410.3	53.6	113.8	1.9
19TH	248.00	29.3	-20.4	2427	2448	12.1	-8.3	752.4	-389.8	48.4	103.9	2.0
20TH	261.00	30.1	-20.6	2427	2448	12.4	-8.4	723.1	-369.4	43.4	94.3	2.0
21ST	274.00	31.0	-20.9	2427	2448	12.8	-8.5	693.0	-348.8	38.8	85.1	2.0
22ND	287.00	31.9	-21.2	2427	2448	13.1	-8.6	661.9	-327.9	34.4	76.3	2.1
23RD	300.00	32.8	-21.4	2427	2448	13.5	-8.8	630.1	-306.7	30.2	67.9	2.1
24TH	313.00	33.6	-21.7	2427	2448	13.9	-8.9	597.3	-285.3	26.4	59.9	2.2
25TH	326.00	34.5	-22.0	2427	2448	14.2	-9.0	563.7	-263.6	22.8	52.4	2.3
26TH	339.00	35.4	-22.2	2427	2448	14.6	-9.1	529.1	-241.6	19.5	45.3	2.3
27TH	352.00	36.5	-21.8	2427	2448	15.1	-8.9	493.8	-219.3	16.6	38.6	2.4
28TH	365.00	38.1	-20.4	2427	2448	15.7	-8.3	457.2	-197.5	13.8	32.4	2.5
29TH	378.00	39.6	-18.9	2427	2448	16.3	-7.7	419.2	-177.1	11.4	26.7	2.6
30TH	391.00	41.2	-17.5	2427	2448	17.0	-7.1	379.5	-158.2	9.2	21.5	2.7
31ST	404.00	42.8	-16.1	2427	2448	17.6	-6.6	338.3	-140.7	7.3	16.9	2.7
32ND	417.00	44.3	-16.5	2427	2448	18.3	-6.8	295.5	-124.6	5.6	12.7	2.7
33RD	430.00	49.1	-20.5	2613	2287	18.8	-9.0	251.2	-108.1	4.0	9.2	2.7
34TH	444.00	61.3	-27.5	3173	2777	19.3	-9.9	202.1	-87.6	2.7	6.0	2.8
35TH	461.00	58.4	-22.9	2975	3202	19.6	-7.1	140.8	-60.1	1.4	3.1	2.8
36TH	478.00	45.8	-14.0	2275	2340	20.1	-6.0	82.4	-37.3	.6	1.2	2.3
37TH	491.00	21.4	-19.4	1170	2340	18.3	-8.3	36.6	-23.3	.2	.4	1.6
38TH	504.00	15.2	-3.9	693	433	22.0	-9.0	15.2	-3.9	.0	.1	.3

TABLE 7. SHEAR AND MOMENT DIAGRAMS : BASS BROTHERS OFFICE BUILDING - PHASE II, FT. WORTH
WIND DIRECTION 190 CONFIGURATION C REFERENCE PRESSURE 26.0 PSF GUST FACTOR 1.32

FLOOR	HEIGHT FT	X-FORCE KIPS	Y-FORCE KIPS	X-AREA SQ FT	Y-AREA SQ FT	X-PRESS PSF	Y-PRESS PSF	X-SHEAR KIPS	Y-SHEAR KIPS	X-MOMENT 1000-FT-KIPS	Y-MOMENT 1000-FT-KIPS	Z-MOMENT 1000-FT-KIPS
GRND	0.00	3.5	-26.1	3240	3060	1.1	-8.5	1041.2	-1154.0	302.5	324.6	12.3
2ND	18.00	1.7	-29.9	2700	3050	.6	-9.8	1037.7	-1127.9	282.0	305.9	12.3
3RD	33.00	8.9	-33.2	3600	4067	2.5	-8.2	1036.0	-1098.0	265.3	290.3	12.0
4TH	53.00	15.1	-21.1	2340	2448	6.5	-8.6	1027.1	-1064.9	243.6	269.7	11.4
5TH	66.00	14.6	-22.1	2340	2448	6.2	-9.0	1012.0	-1043.8	229.9	256.4	11.2
6TH	79.00	14.0	-23.1	2340	2448	6.0	-9.4	997.4	-1021.7	216.5	243.4	11.0
7TH	92.00	17.7	-24.2	2427	2448	7.3	-9.9	983.4	-998.6	203.4	230.5	10.9
8TH	105.00	19.0	-26.3	2427	2448	7.8	-10.8	965.7	-974.4	190.5	217.8	10.9
9TH	118.00	20.2	-28.5	2427	2448	8.3	-11.6	946.8	-948.1	178.1	205.4	11.0
10TH	131.00	21.5	-30.6	2427	2448	8.9	-12.5	926.5	-919.6	165.9	193.2	11.0
11TH	144.00	22.8	-32.8	2427	2448	9.4	-13.4	905.0	-889.0	154.2	181.3	11.1
12TH	157.00	24.1	-34.9	2427	2448	9.9	-14.2	882.2	-856.2	142.8	169.7	11.1
13TH	170.00	25.7	-33.8	2427	2448	10.6	-13.8	858.2	-821.3	131.9	158.4	11.1
14TH	183.00	27.3	-32.9	2427	2448	11.2	-13.4	832.5	-787.5	121.5	147.4	11.0
15TH	196.00	28.2	-32.8	2427	2448	11.6	-13.4	805.2	-754.6	111.4	136.7	10.9
16TH	209.00	27.8	-32.3	2427	2448	11.5	-13.2	777.0	-721.8	101.8	126.4	10.7
17TH	222.00	27.4	-31.8	2427	2448	11.3	-13.0	749.1	-689.5	92.7	116.5	10.5
18TH	235.00	27.0	-31.2	2427	2448	11.1	-12.8	721.7	-657.7	83.9	107.0	10.2
19TH	248.00	26.8	-31.0	2427	2448	11.0	-12.7	694.7	-626.5	75.6	97.8	9.8
20TH	261.00	27.4	-31.9	2427	2448	11.3	-13.0	667.9	-595.5	67.6	88.9	9.4
21ST	274.00	27.9	-32.8	2427	2448	11.5	-13.4	640.5	-563.6	60.1	80.4	9.0
22ND	287.00	28.5	-33.7	2427	2448	11.7	-13.8	612.6	-530.7	53.0	72.3	8.6
23RD	300.00	29.0	-34.6	2427	2448	11.9	-14.1	584.2	-497.0	46.3	64.5	8.1
24TH	313.00	29.5	-35.5	2427	2448	12.2	-14.5	555.2	-462.4	40.0	57.1	7.7
25TH	326.00	30.1	-36.4	2427	2448	12.4	-14.9	525.6	-426.8	34.3	50.0	7.2
26TH	339.00	30.6	-37.4	2427	2448	12.6	-15.3	495.5	-390.4	29.0	43.4	6.7
27TH	352.00	31.8	-37.4	2427	2448	13.1	-15.3	464.9	-353.0	24.1	37.2	6.2
28TH	365.00	33.9	-36.0	2427	2448	14.0	-14.7	433.1	-315.7	19.8	31.3	5.7
29TH	378.00	36.0	-34.7	2427	2448	14.8	-14.2	399.2	-279.7	15.9	25.9	5.2
30TH	391.00	38.0	-33.3	2427	2448	15.7	-13.6	363.3	-245.0	12.5	21.0	4.8
31ST	404.00	40.1	-32.0	2427	2448	16.5	-13.1	325.2	-211.7	9.5	16.5	4.5
32ND	417.00	42.2	-32.3	2427	2448	17.4	-13.2	285.1	-179.7	7.0	12.5	4.2
33RD	430.00	46.8	-35.9	2613	2287	17.9	-15.7	242.9	-147.4	4.9	9.1	3.9
34TH	444.00	58.2	-43.8	3173	2777	18.3	-15.8	196.1	-111.5	3.0	6.0	3.7
35TH	461.00	53.9	-29.1	2975	3202	18.1	-9.1	137.9	-67.7	1.5	3.2	3.6
36TH	478.00	44.6	-14.8	2275	2340	19.6	-6.3	84.0	-38.6	.6	1.3	2.6
37TH	491.00	21.7	-19.4	1170	2340	18.6	-8.3	39.5	-23.8	.2	.5	1.6
38TH	504.00	17.7	-4.4	693	433	25.5	-10.2	17.7	-4.4	.0	.1	.3

TABLE 7. SHEAR AND MOMENT DIAGRAMS : BASS BROTHERS OFFICE BUILDING - PHASE II, FT. WORTH
WIND DIRECTION 200 CONFIGURATION C REFERENCE PRESSURE 26.0 PSF GUST FACTOR 1.32

FLOOR	HEIGHT FT	X-FORCE KIPS	Y-FORCE KIPS	X-AREA SQ FT	Y-AREA SQ FT	X-PRESS PSF	Y-PRESS PSF	X-SHEAR KIPS	Y-SHEAR KIPS	X-MOMENT 1000-FT-KIPS	Y-MOMENT 1000-FT-KIPS	Z-MOMENT 1000-FT-KIPS
GRND	0.00	16.9	-34.5	3240	3060	5.2	-11.3	1182.0	-1377.4	365.2	357.8	27.0
2ND	18.00	8.5	-37.8	2700	3050	3.2	-12.4	1165.0	-1342.9	340.8	336.7	27.3
3RD	33.00	17.1	-39.0	3600	4067	4.7	-9.6	1156.5	-1305.1	320.9	319.3	26.9
4TH	53.00	21.8	-22.0	2340	2448	9.3	-9.0	1139.4	-1266.1	295.2	296.3	26.3
5TH	66.00	21.2	-23.1	2340	2448	9.1	-9.4	1117.6	-1244.1	278.9	281.7	26.0
6TH	79.00	20.6	-24.2	2340	2448	8.8	-9.9	1096.3	-1221.0	262.8	267.3	25.7
7TH	92.00	20.4	-25.5	2427	2448	8.4	-10.4	1075.7	-1196.8	247.1	253.2	25.3
8TH	105.00	21.6	-28.3	2427	2448	8.9	-11.6	1055.3	-1171.3	231.7	239.3	25.0
9TH	118.00	22.7	-31.1	2427	2448	9.4	-12.7	1033.7	-1143.0	216.7	225.7	24.7
10TH	131.00	23.8	-33.9	2427	2448	9.8	-13.8	1011.0	-1111.9	202.0	212.4	24.4
11TH	144.00	25.0	-36.7	2427	2448	10.3	-15.0	987.2	-1078.1	187.8	199.4	24.0
12TH	157.00	26.1	-39.4	2427	2448	10.8	-16.1	962.2	-1041.4	174.0	186.8	23.6
13TH	170.00	27.5	-38.9	2427	2448	11.3	-15.9	936.1	-1001.9	160.7	174.4	23.1
14TH	183.00	28.8	-38.5	2427	2448	11.9	-15.7	908.7	-963.0	148.0	162.4	22.6
15TH	196.00	29.6	-38.5	2427	2448	12.2	-15.7	879.8	-924.6	135.7	150.8	22.0
16TH	209.00	29.2	-38.2	2427	2448	12.1	-15.6	850.2	-886.1	123.9	139.6	21.3
17TH	222.00	28.9	-37.8	2427	2448	11.9	-15.4	821.0	-847.9	112.7	128.7	20.6
18TH	235.00	28.5	-37.5	2427	2448	11.7	-15.3	792.1	-810.1	101.9	118.2	19.9
19TH	248.00	28.3	-37.6	2427	2448	11.7	-15.3	763.6	-772.6	91.6	108.1	19.2
20TH	261.00	29.1	-39.2	2427	2448	12.0	-16.0	735.3	-735.1	81.8	98.4	18.5
21ST	274.00	29.8	-40.8	2427	2448	12.3	-16.7	706.2	-695.9	72.5	89.0	17.7
22ND	287.00	30.6	-42.4	2427	2448	12.6	-17.3	676.4	-655.1	63.7	80.0	16.8
23RD	300.00	31.3	-44.0	2427	2448	12.9	-18.0	645.8	-612.7	55.5	71.4	15.9
24TH	313.00	32.1	-45.7	2427	2448	13.2	-18.6	614.5	-568.7	47.8	63.2	15.0
25TH	326.00	32.8	-47.3	2427	2448	13.5	-19.3	582.4	-523.0	40.7	55.4	14.0
26TH	339.00	33.5	-48.9	2427	2448	13.8	-20.0	549.6	-475.8	34.2	48.1	12.9
27TH	352.00	35.0	-48.9	2427	2448	14.4	-20.0	516.1	-426.9	28.3	41.2	11.8
28TH	365.00	37.5	-46.5	2427	2448	15.5	-19.0	481.1	-378.0	23.1	34.7	10.7
29TH	378.00	40.0	-44.1	2427	2448	16.5	-18.0	443.5	-331.5	18.5	28.7	9.6
30TH	391.00	42.6	-41.7	2427	2448	17.5	-17.0	403.5	-287.4	14.5	23.2	8.7
31ST	404.00	45.1	-39.3	2427	2448	18.6	-16.0	361.0	-245.7	11.0	18.2	7.7
32ND	417.00	47.6	-38.3	2427	2448	19.6	-15.7	315.9	-206.4	8.1	13.8	6.9
33RD	430.00	53.1	-42.1	2613	2287	20.3	-18.4	268.3	-168.1	5.6	10.0	6.1
34TH	444.00	65.7	-49.0	3173	2777	20.7	-17.6	215.2	-126.0	3.6	6.6	5.5
35TH	461.00	56.8	-30.1	2975	3202	19.1	-9.4	149.5	-77.1	1.9	3.5	4.8
36TH	478.00	47.5	-15.7	2275	2340	20.9	-6.7	92.7	-46.9	.8	1.5	3.2
37TH	491.00	24.7	-24.3	1170	2340	21.1	-10.4	45.2	-31.2	.3	.6	1.9
38TH	504.00	20.5	-6.9	693	433	29.6	-16.0	20.5	-6.9	.0	.1	.4

TABLE 7. SHEAR AND MOMENT DIAGRAMS : BASS BROTHERS OFFICE BUILDING - PHASE II, FT. WORTH
WIND DIRECTION 210 CONFIGURATION C REFERENCE PRESSURE 26.0 PSF GUST FACTOR 1.32

FLOOR	HEIGHT FT	X-FORCE KIPS	Y-FORCE KIPS	X-AREA SQ FT	Y-AREA SQ FT	X-PRESS PSF	Y-PRESS PSF	X-SHEAR KIPS	Y-SHEAR KIPS	X-MOMENT	Y-MOMENT	Z-MOMENT
										1000-FT-KIPS		
GRND	0.00	5.6	-24.6	3240	3060	1.7	-8.0	836.2	-1156.3	304.1	262.4	15.8
2ND	18.00	.7	-28.7	2700	3050	.3	-9.4	830.6	-1131.7	283.5	247.4	15.8
3RD	33.00	5.8	-33.7	3600	4067	1.6	-8.3	829.8	-1103.0	266.8	234.9	15.5
4TH	53.00	13.7	-20.7	2340	2448	5.9	-8.4	824.1	-1069.2	245.0	218.4	14.8
5TH	66.00	13.3	-22.2	2340	2448	5.7	-9.1	810.3	-1048.6	231.3	207.8	14.5
6TH	79.00	12.9	-23.8	2340	2448	5.5	-9.7	797.0	-1026.3	217.8	197.3	14.4
7TH	92.00	14.8	-25.4	2427	2448	6.1	-10.4	784.1	-1002.6	204.6	187.0	14.3
8TH	105.00	15.2	-27.2	2427	2448	6.3	-11.1	769.3	-977.2	191.7	176.9	14.4
9TH	118.00	15.6	-29.0	2427	2448	6.4	-11.9	754.0	-950.0	179.2	167.0	14.4
10TH	131.00	16.0	-30.8	2427	2448	6.6	-12.6	738.4	-921.0	167.0	157.3	14.5
11TH	144.00	16.4	-32.7	2427	2448	6.8	-13.3	722.4	-890.1	155.3	147.8	14.5
12TH	157.00	16.8	-34.5	2427	2448	6.9	-14.1	706.0	-857.5	143.9	138.6	14.5
13TH	170.00	18.8	-33.5	2427	2448	7.7	-13.7	689.2	-823.0	133.0	129.5	14.5
14TH	183.00	20.8	-32.6	2427	2448	8.6	-13.3	670.4	-789.5	122.5	120.7	14.5
15TH	196.00	22.1	-32.3	2427	2448	9.1	-13.2	649.7	-756.9	112.5	112.1	14.3
16TH	209.00	21.9	-31.7	2427	2448	9.0	-13.0	627.6	-724.6	102.8	103.8	14.2
17TH	222.00	21.7	-31.1	2427	2448	8.9	-12.7	605.7	-692.8	93.6	95.8	14.0
18TH	235.00	21.5	-30.5	2427	2448	8.9	-12.5	584.0	-661.7	84.8	88.0	13.8
19TH	248.00	21.4	-30.2	2427	2448	8.8	-12.4	562.5	-631.2	76.4	80.6	13.5
20TH	261.00	21.7	-31.3	2427	2448	8.9	-12.8	541.0	-601.0	68.4	73.4	13.3
21ST	274.00	21.9	-32.3	2427	2448	9.0	-13.2	519.4	-569.7	60.8	66.5	12.9
22ND	287.00	22.1	-33.4	2427	2448	9.1	-13.6	497.4	-537.4	53.6	59.9	12.5
23RD	300.00	22.4	-34.4	2427	2448	9.2	-14.1	475.3	-504.0	46.8	53.6	12.0
24TH	313.00	22.6	-35.5	2427	2448	9.3	-14.5	452.9	-469.6	40.5	47.5	11.5
25TH	326.00	22.9	-36.5	2427	2448	9.4	-14.9	430.3	-434.1	34.6	41.8	10.9
26TH	339.00	23.1	-37.5	2427	2448	9.5	-15.3	407.4	-397.6	29.2	36.4	10.2
27TH	352.00	24.2	-37.8	2427	2448	10.0	-15.4	384.3	-360.1	24.3	31.2	9.5
28TH	365.00	26.6	-36.8	2427	2448	11.0	-15.0	360.1	-322.3	19.8	26.4	8.8
29TH	378.00	29.0	-35.8	2427	2448	11.9	-14.6	333.5	-285.5	15.9	21.9	8.1
30TH	391.00	31.4	-34.8	2427	2448	12.9	-14.2	304.5	-249.7	12.4	17.7	7.4
31ST	404.00	33.7	-33.9	2427	2448	13.9	-13.8	273.2	-214.9	9.4	14.0	6.8
32ND	417.00	36.1	-34.2	2427	2448	14.9	-14.0	239.4	-181.0	6.8	10.6	6.2
33RD	430.00	40.0	-37.7	2613	2287	15.3	-16.5	203.3	-146.8	4.7	7.7	5.6
34TH	444.00	49.0	-45.3	3173	2777	15.4	-16.3	163.3	-109.1	2.9	5.2	5.1
35TH	461.00	40.5	-28.0	2975	3202	13.6	-8.8	114.3	-63.8	1.4	2.8	4.5
36TH	478.00	35.4	-13.0	2275	2340	15.6	-5.5	73.9	-35.8	.6	1.2	2.9
37TH	491.00	20.2	-18.3	1170	2340	17.2	-7.8	38.5	-22.8	.2	.5	1.6
38TH	504.00	18.3	-4.5	693	433	26.5	-10.4	18.3	-4.5	.0	.1	.3

TABLE 7. SHEAR AND MOMENT DIAGRAMS : BASS BROTHERS OFFICE BUILDING - PHASE II, FT. WORTH
WIND DIRECTION 220 CONFIGURATION C REFERENCE PRESSURE 26.0 PSF GUST FACTOR 1.32

FLOOR	HEIGHT FT	X-FORCE KIPS	Y-FORCE KIPS	X-AREA SQ FT	Y-AREA SQ FT	X-PRESS PSF	Y-PRESS PSF	X-SHEAR KIPS	Y-SHEAR KIPS	X-MOMENT	Y-MOMENT	Z-MOMENT
										1000-FT-KIPS		
GRND	0.00	-5.1	-25.1	3240	3060	-1.6	-8.2	347.7	-1273.9	349.2	123.7	9.6
2ND	18.00	-9.6	-29.9	2700	3050	-3.6	-9.8	352.8	-1248.8	326.5	117.4	9.6
3RD	33.00	-6.8	-32.4	3600	4067	-1.9	-8.0	362.4	-1218.9	308.0	112.0	9.2
4TH	53.00	3.5	-19.2	2340	2448	1.5	-7.8	369.2	-1186.5	283.9	104.7	8.5
5TH	66.00	2.7	-20.9	2340	2448	1.2	-8.5	365.8	-1167.3	268.6	99.9	8.2
6TH	79.00	2.0	-22.7	2340	2448	.8	-9.3	363.1	-1146.4	253.6	95.2	8.1
7TH	92.00	3.6	-24.4	2427	2448	1.5	-10.0	361.1	-1123.7	238.9	90.5	8.0
8TH	105.00	4.4	-26.6	2427	2448	1.8	-10.9	357.5	-1099.3	224.4	85.8	8.1
9TH	118.00	5.3	-28.7	2427	2448	2.2	-11.7	353.1	-1072.7	210.3	81.2	8.2
10TH	131.00	6.1	-30.8	2427	2448	2.5	-12.6	347.8	-1044.0	196.5	76.6	8.4
11TH	144.00	7.0	-33.0	2427	2448	2.9	-13.5	341.7	-1013.2	183.2	72.1	8.6
12TH	157.00	7.8	-35.1	2427	2448	3.2	-14.3	334.7	-980.2	170.2	67.7	8.8
13TH	170.00	9.3	-34.5	2427	2448	3.8	-14.1	326.9	-945.1	157.7	63.4	9.0
14TH	183.00	10.8	-33.9	2427	2448	4.5	-13.9	317.5	-910.7	145.6	59.2	9.2
15TH	196.00	11.7	-33.9	2427	2448	4.8	-13.9	306.7	-876.7	134.0	55.2	9.4
16TH	209.00	11.2	-33.4	2427	2448	4.6	-13.6	295.0	-842.8	122.8	51.3	9.5
17TH	222.00	10.8	-32.8	2427	2448	4.4	-13.4	283.8	-809.4	112.1	47.5	9.7
18TH	235.00	10.3	-32.2	2427	2448	4.2	-13.2	273.0	-776.6	101.8	43.9	9.9
19TH	248.00	9.8	-32.1	2427	2448	4.1	-13.1	262.7	-744.3	91.9	40.4	10.0
20TH	261.00	9.4	-33.7	2427	2448	3.9	-13.7	252.9	-712.2	82.4	37.1	10.2
21ST	274.00	8.9	-35.2	2427	2448	3.7	-14.4	243.5	-678.6	73.4	33.8	10.3
22ND	287.00	8.5	-36.7	2427	2448	3.5	-15.0	234.5	-643.4	64.8	30.7	10.3
23RD	300.00	8.0	-38.2	2427	2448	3.3	-15.6	226.0	-606.7	56.7	27.7	10.1
24TH	313.00	7.6	-39.8	2427	2448	3.1	-16.2	218.0	-568.4	49.0	24.8	9.9
25TH	326.00	7.2	-41.3	2427	2448	2.9	-16.9	210.4	-528.7	41.9	22.1	9.6
26TH	339.00	6.7	-42.8	2427	2448	2.8	-17.5	203.2	-487.4	35.3	19.4	9.3
27TH	352.00	7.5	-43.9	2427	2448	3.1	-17.9	196.5	-444.6	29.2	16.8	8.8
28TH	365.00	10.2	-44.3	2427	2448	4.2	-18.1	189.0	-400.7	23.7	14.3	8.3
29TH	378.00	12.9	-44.7	2427	2448	5.3	-18.3	178.8	-356.4	18.8	11.9	7.8
30TH	391.00	15.6	-45.1	2427	2448	6.4	-18.4	165.8	-311.7	14.5	9.6	7.3
31ST	404.00	18.4	-45.5	2427	2448	7.6	-18.6	150.2	-266.6	10.7	7.6	6.8
32ND	417.00	21.1	-46.9	2427	2448	8.7	-19.1	131.8	-221.1	7.5	5.8	6.4
33RD	430.00	24.4	-49.3	2613	2287	9.3	-21.5	110.8	-174.2	5.0	4.2	6.0
34TH	444.00	29.9	-58.7	3173	2777	9.4	-21.1	86.4	-124.9	2.9	2.8	5.4
35TH	461.00	16.2	-36.2	2975	3202	5.4	-11.3	56.5	-66.3	1.3	1.6	4.7
36TH	478.00	14.6	-13.8	2275	2340	6.4	-5.9	40.3	-30.1	.4	.8	2.8
37TH	491.00	13.4	-14.1	1170	2340	11.5	-6.0	25.7	-16.3	.1	.3	1.3
38TH	504.00	12.3	-2.1	693	433	17.7	-4.9	12.3	-2.1	.0	.1	.2

TABLE 7. SHEAR AND MOMENT DIAGRAMS : BASS BROTHERS OFFICE BUILDING - PHASE II, FT. WORTH
WIND DIRECTION 230 CONFIGURATION C REFERENCE PRESSURE 26.0 PSF GUST FACTOR 1.32

FLOOR	HEIGHT FT	X-FORCE KIPS	Y-FORCE KIPS	X-AREA SQ FT	Y-AREA SQ FT	X-PRESS PSF	Y-PRESS PSF	X-SHEAR KIPS	Y-SHEAR KIPS	X-MOMENT	Y-MOMENT	Z-MOMENT
										1000-FT-KIPS		
GRND	0.00	-8.6	-28.1	3240	3060	-2.7	-9.2	115.3	-1439.8	392.1	52.1	2.7
2ND	18.00	-12.4	-33.3	2700	3050	-4.6	-10.9	124.0	-1411.7	366.4	50.0	2.7
3RD	33.00	-9.2	-35.5	3600	4067	-2.6	-8.7	136.4	-1378.4	345.5	48.0	2.3
4TH	53.00	-1.4	-21.4	2340	2448	-.6	-8.7	145.6	-1342.9	318.3	45.2	1.5
5TH	66.00	-2.3	-23.1	2340	2448	-1.0	-9.4	147.0	-1321.5	301.0	43.3	1.2
6TH	79.00	-3.2	-24.7	2340	2448	-1.4	-10.1	149.3	-1298.4	283.9	41.4	1.0
7TH	92.00	-1.1	-26.5	2427	2448	-.5	-10.8	152.5	-1273.7	267.2	39.4	.8
8TH	105.00	-1.0	-29.1	2427	2448	-.4	-11.9	153.6	-1247.3	250.8	37.4	1.0
9TH	118.00	-.9	-31.7	2427	2448	-.4	-12.9	154.6	-1218.2	234.8	35.4	1.1
10TH	131.00	-.7	-34.3	2427	2448	-.3	-14.0	155.5	-1186.6	219.2	33.4	1.3
11TH	144.00	-.6	-36.9	2427	2448	-.2	-15.1	156.2	-1152.3	204.0	31.4	1.5
12TH	157.00	-.4	-39.4	2427	2448	-.2	-16.1	156.7	-1115.4	189.2	29.3	1.7
13TH	170.00	1.8	-38.5	2427	2448	.7	-15.7	157.2	-1076.0	175.0	27.3	2.0
14TH	183.00	3.9	-37.7	2427	2448	1.6	-15.4	155.4	-1037.5	161.3	25.3	2.2
15TH	196.00	5.6	-37.6	2427	2448	2.3	-15.3	151.5	-999.8	148.0	23.3	2.5
16TH	209.00	6.0	-36.9	2427	2448	2.5	-15.1	145.9	-962.2	135.3	21.3	2.7
17TH	222.00	6.4	-36.2	2427	2448	2.7	-14.8	139.9	-925.3	123.0	19.5	3.0
18TH	235.00	6.9	-35.5	2427	2448	2.8	-14.5	133.5	-889.1	111.2	17.7	3.2
19TH	248.00	7.1	-35.6	2427	2448	2.9	-14.5	126.6	-853.6	99.9	16.0	3.5
20TH	261.00	6.7	-38.2	2427	2448	2.8	-15.6	119.5	-818.1	89.0	14.4	3.7
21ST	274.00	6.3	-40.9	2427	2448	2.6	-16.7	112.8	-779.8	78.6	12.9	3.9
22ND	287.00	5.8	-43.6	2427	2448	2.4	-17.8	106.5	-738.9	68.7	11.5	4.0
23RD	300.00	5.4	-46.2	2427	2448	2.2	-18.9	100.7	-695.3	59.4	10.1	4.1
24TH	313.00	5.0	-48.9	2427	2448	2.1	-20.0	95.2	-649.1	50.7	8.9	4.1
25TH	326.00	4.6	-51.6	2427	2448	1.9	-21.1	90.3	-600.2	42.6	7.7	4.0
26TH	339.00	4.1	-54.2	2427	2448	1.7	-22.2	85.7	-548.6	35.1	6.5	3.9
27TH	352.00	4.5	-55.9	2427	2448	1.9	-22.8	81.6	-494.4	28.3	5.4	3.7
28TH	365.00	6.1	-55.9	2427	2448	2.5	-22.8	77.1	-438.5	22.3	4.4	3.5
29TH	378.00	7.7	-55.9	2427	2448	3.2	-22.8	70.9	-382.6	16.9	3.4	3.4
30TH	391.00	9.3	-55.9	2427	2448	3.8	-22.8	63.2	-326.7	12.3	2.6	3.3
31ST	404.00	10.9	-56.0	2427	2448	4.5	-22.9	53.9	-270.8	8.4	1.8	3.3
32ND	417.00	12.5	-56.8	2427	2448	5.2	-23.2	42.9	-214.8	5.3	1.2	3.3
33RD	430.00	13.3	-58.0	2613	2287	5.1	-25.4	30.4	-158.0	2.8	.7	3.3
34TH	444.00	13.9	-67.6	3173	2777	4.4	-24.3	17.1	-99.9	1.0	.4	3.2
35TH	461.00	.1	-39.2	2975	3202	.0	-12.2	3.1	-32.3	-.1	.2	3.1
36TH	478.00	-3.8	-6.2	2275	2340	-1.7	-2.6	3.1	6.8	-.3	.1	1.7
37TH	491.00	4.5	6.4	1170	2340	3.8	2.8	6.9	13.0	-.2	.1	.8
38TH	504.00	2.4	6.6	693	433	3.5	15.2	2.4	6.6	-.0	.0	-.0

TABLE 7. SHEAR AND MOMENT DIAGRAMS : BASS BROTHERS OFFICE BUILDING - PHASE II, FT. WORTH
WIND DIRECTION 240 CONFIGURATION C REFERENCE PRESSURE 26 0 PSF GUST FACTOR 1.32

FLOOR	HEIGHT FT	X-FORCE KIPS	Y-FORCE KIPS	X-AREA SQ FT	Y-AREA SQ FT	X-PRESS PSF	Y-PRESS PSF	X-SHEAR KIPS	Y-SHEAR KIPS	X-MOMENT 1000-FT-KIPS	Y-MOMENT 1000-FT-KIPS	Z-MOMENT 1000-FT-KIPS
GRND	0.00	-13.2	-32.2	3240	3060	-4.1	-10.5	190.5	-1537.1	411.8	80.8	-11.8
2ND	18.00	-15.0	-35.1	2700	3050	-5.5	-11.5	203.6	-1504.9	384.5	77.3	-11.9
3RD	33.00	-12.9	-38.8	3600	4067	-3.6	-9.5	218.6	-1469.8	362.1	74.1	-12.3
4TH	53.00	-4.5	-22.7	2340	2448	-1.9	-9.3	231.5	-1430.9	333.1	69.6	-13.0
5TH	66.00	-5.9	-24.5	2340	2448	-2.5	-10.0	236.0	-1408.2	314.7	66.6	-13.1
6TH	79.00	-7.3	-26.2	2340	2448	-3.1	-10.7	241.9	-1383.7	296.5	63.5	-13.1
7TH	92.00	-5.0	-28.2	2427	2448	-2.1	-11.5	249.1	-1357.4	278.7	60.3	-13.1
8TH	105.00	-2.8	-31.3	2427	2448	-1.1	-12.8	254.2	-1329.3	261.3	57.0	-12.7
9TH	118.00	-.5	-34.5	2427	2448	-.2	-14.1	256.9	-1298.0	244.2	53.7	-12.2
10TH	131.00	1.7	-37.7	2427	2448	.7	-15.4	257.5	-1263.5	227.5	50.4	-11.7
11TH	144.00	4.0	-40.8	2427	2448	1.6	-16.7	255.7	-1225.8	211.3	47.0	-11.1
12TH	157.00	6.2	-43.9	2427	2448	2.6	-17.9	251.8	-1185.0	195.7	43.7	-10.5
13TH	170.00	7.0	-43.1	2427	2448	2.9	-17.6	245.6	-1141.1	180.6	40.5	-9.7
14TH	183.00	7.9	-42.4	2427	2448	3.3	-17.3	238.5	-1097.9	166.0	37.3	-9.0
15TH	196.00	8.6	-42.2	2427	2448	3.5	-17.2	230.6	-1055.5	152.0	34.3	-8.3
16TH	209.00	8.9	-41.6	2427	2448	3.7	-17.0	222.1	-1013.3	138.6	31.4	-7.5
17TH	222.00	9.2	-41.0	2427	2448	3.8	-16.8	213.2	-971.7	125.7	28.5	-6.8
18TH	235.00	9.5	-40.4	2427	2448	3.9	-16.5	204.0	-930.7	113.3	25.8	-6.1
19TH	248.00	9.7	-40.5	2427	2448	4.0	-16.5	194.5	-890.2	101.5	23.2	-5.3
20TH	261.00	9.8	-42.9	2427	2448	4.0	-17.5	184.8	-849.8	90.1	20.8	-4.6
21ST	274.00	9.8	-45.3	2427	2448	4.0	-18.5	175.0	-806.9	79.4	18.4	-4.0
22ND	287.00	9.8	-47.8	2427	2448	4.1	-19.5	165.2	-761.5	69.2	16.2	-3.5
23RD	300.00	9.9	-50.2	2427	2448	4.1	-20.5	155.4	-713.8	59.6	14.1	-3.0
24TH	313.00	9.9	-52.6	2427	2448	4.1	-21.5	145.5	-663.6	50.6	12.2	-2.7
25TH	326.00	9.9	-55.0	2427	2448	4.1	-22.5	135.6	-611.0	42.4	10.3	-2.4
26TH	339.00	10.0	-57.5	2427	2448	4.1	-23.5	125.6	-556.0	34.8	8.6	-2.2
27TH	352.00	10.3	-58.6	2427	2448	4.3	-23.9	115.7	-498.5	27.9	7.1	-2.1
28TH	365.00	11.2	-57.7	2427	2448	4.6	-23.6	105.3	-439.9	21.8	5.6	-2.0
29TH	378.00	12.0	-56.9	2427	2448	4.9	-23.2	94.2	-382.2	16.5	4.3	-1.8
30TH	391.00	12.8	-56.0	2427	2448	5.3	-22.9	82.2	-325.4	11.9	3.2	-1.5
31ST	404.00	13.6	-55.2	2427	2448	5.6	-22.5	69.4	-269.3	8.0	2.2	-1.0
32ND	417.00	14.5	-56.7	2427	2448	6.0	-23.2	55.7	-214.2	4.9	1.4	-.5
33RD	430.00	16.9	-59.3	2613	2287	6.5	-25.9	41.3	-157.5	2.4	.8	.1
34TH	444.00	20.4	-71.9	3173	2777	6.4	-25.9	24.4	-98.2	.7	.3	.5
35TH	461.00	4.9	-42.4	2975	3202	1.7	-13.2	4.0	-26.3	-.4	.1	.8
36TH	478.00	-3.6	-5.1	2275	2340	-1.6	-2.2	-1.0	16.1	-.5	.0	.3
37TH	491.00	1.6	12.9	1170	2340	1.3	.5.5	2.6	21.2	-.2	.0	.1
38TH	504.00	1.0	8.3	693	433	1.5	19.1	1.0	8.3	-.1	.0	-.1

TABLE 7. SHEAR AND MOMENT DIAGRAMS : BASS BROTHERS OFFICE BUILDING - PHASE II, FT. WORTH
WIND DIRECTION 250 CONFIGURATION C REFERENCE PRESSURE 26.0 PSF GUST FACTOR 1.32

FLOOR	HEIGHT FT	X-FORCE KIPS	Y-FORCE KIPS	X-AREA SQ FT	Y-AREA SQ FT	X-PRESS PSF	Y-PRESS PSF	X-SHEAR KIPS	Y-SHEAR KIPS	X-MOMENT	Y-MOMENT 1000-FT-KIPS	Z-MOMENT
GRND	0.00	-11.6	-31.6	3240	3060	-3.6	-10.3	447.9	-1636.7	436.9	156.5	-21.6
2ND	18.00	-13.2	-35.6	2700	3050	-4.9	-11.7	459.5	-1605.1	407.7	148.3	-21.7
3RD	33.00	-8.7	-39.6	3600	4067	-2.4	-9.7	472.6	-1569.5	383.9	141.3	-22.1
4TH	53.00	-1.0	-24.3	2340	2448	-.4	-9.9	481.3	-1529.8	352.9	131.8	-22.8
5TH	66.00	-1.8	-26.2	2340	2448	-.8	-10.7	482.3	-1505.5	333.2	125.5	-22.8
6TH	79.00	-2.7	-28.0	2340	2448	-1.2	-11.5	484.2	-1479.4	313.8	119.2	-22.7
7TH	92.00	-.5	-30.1	2427	2448	-.2	-12.3	486.8	-1451.3	294.7	112.9	-22.5
8TH	105.00	1.7	-33.9	2427	2448	.7	-13.9	487.4	-1421.2	276.0	106.6	-21.9
9TH	118.00	3.9	-37.7	2427	2448	1.6	-15.4	485.7	-1387.2	257.8	100.2	-21.3
10TH	131.00	6.2	-41.5	2427	2448	2.5	-16.9	481.7	-1349.5	240.0	94.0	-20.5
11TH	144.00	8.4	-45.3	2427	2448	3.5	-18.5	475.6	-1308.1	222.7	87.7	-19.6
12TH	157.00	10.7	-49.0	2427	2448	4.4	-20.0	467.1	-1262.8	206.0	81.6	-18.6
13TH	170.00	13.0	-47.8	2427	2448	5.3	-19.5	456.5	-1213.8	189.9	75.6	-17.6
14TH	183.00	15.3	-47.0	2427	2448	6.3	-19.2	443.5	-1166.0	174.5	69.8	-16.5
15TH	196.00	17.0	-47.0	2427	2448	7.0	-19.2	428.2	-1119.0	159.6	64.1	-15.5
16TH	209.00	17.2	-46.2	2427	2448	7.1	-18.9	411.2	-1072.1	145.4	58.6	-14.4
17TH	222.00	17.5	-45.4	2427	2448	7.2	-18.6	394.0	-1025.8	131.7	53.4	-13.4
18TH	235.00	17.8	-44.6	2427	2448	7.3	-18.2	376.5	-980.4	118.7	48.4	-12.4
19TH	248.00	18.1	-44.5	2427	2448	7.5	-18.2	358.6	-935.7	106.2	43.6	-11.4
20TH	261.00	18.2	-46.6	2427	2448	7.5	-19.0	340.5	-891.2	94.4	39.1	-10.5
21ST	274.00	18.3	-48.8	2427	2448	7.5	-19.9	322.3	-844.6	83.1	34.8	-9.6
22ND	287.00	18.4	-50.9	2427	2448	7.6	-20.8	304.0	-795.8	72.4	30.7	-8.8
23RD	300.00	18.5	-53.0	2427	2448	7.6	-21.7	285.6	-744.9	62.4	26.9	-8.1
24TH	313.00	18.7	-55.2	2427	2448	7.7	-22.5	267.0	-691.9	53.1	23.3	-7.5
25TH	326.00	18.8	-57.3	2427	2448	7.7	-23.4	248.4	-636.7	44.4	19.9	-6.9
26TH	339.00	18.9	-59.4	2427	2448	7.8	-24.3	229.6	-579.4	36.5	16.8	-6.5
27TH	352.00	19.2	-60.5	2427	2448	7.9	-24.7	210.7	-520.0	29.4	13.9	-6.1
28TH	365.00	20.0	-59.8	2427	2448	8.2	-24.4	191.4	-459.5	23.0	11.3	-5.6
29TH	378.00	20.7	-59.2	2427	2448	8.5	-24.2	171.5	-399.7	17.4	9.0	-5.1
30TH	391.00	21.4	-58.5	2427	2448	8.8	-23.9	150.8	-340.5	12.6	6.9	-4.4
31ST	404.00	22.1	-57.9	2427	2448	9.1	-23.6	129.4	-281.9	8.6	5.1	-3.7
32ND	417.00	22.8	-59.2	2427	2448	9.4	-24.2	107.3	-224.0	5.3	3.5	-2.7
33RD	430.00	25.8	-60.1	2613	2287	9.9	-26.3	84.5	-164.8	2.7	2.3	-1.7
34TH	444.00	31.4	-72.0	3173	2777	9.9	-25.9	58.7	-104.7	.9	1.3	-1.1
35TH	461.00	16.8	-46.1	2975	3202	5.6	-14.4	27.3	-32.7	-.3	.5	-.3
36TH	478.00	3.6	-7.1	2275	2340	1.6	-3.0	10.5	13.4	-.5	.2	-.3
37TH	491.00	2.1	11.0	1170	2340	1.8	4.7	6.9	20.5	-.3	.1	-.3
38TH	504.00	4.8	9.5	693	433	6.9	22.0	4.8	9.5	-.1	.0	-.0

TABLE 7. SHEAR AND MOMENT DIAGRAMS : BASS BROTHERS OFFICE BUILDING - PHASE II, FT. WORTH
WIND DIRECTION 260 CONFIGURATION C REFERENCE PRESSURE 26.0 PSF GUST FACTOR 1.32

FLOOR	HEIGHT FT	X-FORCE KIPS	Y-FORCE KIPS	X-AREA SQ FT	Y-AREA SQ FT	X-PRESS PSF	Y-PRESS PSF	X-SHEAR KIPS	Y-SHEAR KIPS	X-MOMENT 1000-FT-KIPS	Y-MOMENT 1000-FT-KIPS	Z-MOMENT 1000-FT-KIPS
GRND	0.00	-13.4	-31.3	3240	3060	-4.1	-10.2	435.3	-1704.5	470.5	146.9	-20.9
2ND	18.00	-12.3	-33.6	2700	3050	-4.6	-11.0	448.6	-1673.3	440.1	139.0	-21.0
3RD	33.00	-7.4	-36.1	3600	4067	-2.0	-8.9	460.9	-1639.6	415.3	132.1	-21.3
4TH	53.00	-.9	-23.5	2340	2448	-.4	-9.6	468.3	-1603.6	382.8	122.8	-21.8
5TH	66.00	-1.2	-26.0	2340	2448	-.5	-10.6	469.2	-1580.1	362.1	116.7	-21.7
6TH	79.00	-1.5	-28.6	2340	2448	-.7	-11.7	470.4	-1554.0	341.8	110.6	-21.7
7TH	92.00	1.4	-31.2	2427	2448	.6	-12.7	471.9	-1525.5	321.8	104.5	-21.5
8TH	105.00	3.6	-34.2	2427	2448	1.5	-14.0	470.5	-1494.3	302.1	98.4	-21.2
9TH	118.00	5.7	-37.3	2427	2448	2.4	-15.2	467.0	-1460.1	282.9	92.3	-20.7
10TH	131.00	7.9	-40.3	2427	2448	3.3	-16.5	461.2	-1422.8	264.2	86.3	-20.3
11TH	144.00	10.1	-43.4	2427	2448	4.2	-17.7	453.3	-1382.5	246.0	80.3	-19.8
12TH	157.00	12.3	-46.4	2427	2448	5.1	-18.9	443.2	-1339.1	228.3	74.5	-19.2
13TH	170.00	14.0	-46.3	2427	2448	5.8	-18.9	430.9	-1292.7	211.2	68.8	-18.7
14TH	183.00	15.7	-46.5	2427	2448	6.5	-19.0	416.9	-1246.4	194.7	63.3	-18.0
15TH	196.00	16.8	-47.1	2427	2448	6.9	-19.2	401.2	-1199.9	178.8	58.0	-17.3
16TH	209.00	16.5	-47.2	2427	2448	6.8	-19.3	384.4	-1152.8	163.5	52.9	-16.5
17TH	222.00	16.2	-47.3	2427	2448	6.7	-19.3	368.0	-1105.6	148.8	48.0	-15.7
18TH	235.00	15.9	-47.3	2427	2448	6.5	-19.3	351.8	-1058.4	134.7	43.3	-14.9
19TH	248.00	15.8	-47.7	2427	2448	6.5	-19.5	335.9	-1011.1	121.3	38.8	-14.1
20TH	261.00	16.5	-49.3	2427	2448	6.8	-20.1	320.2	-963.4	108.4	34.6	-13.2
21ST	274.00	17.3	-50.9	2427	2448	7.1	-20.8	303.6	-914.1	96.2	30.5	-12.4
22ND	287.00	18.0	-52.4	2427	2448	7.4	-21.4	286.4	-863.2	84.7	26.7	-11.6
23RD	300.00	18.7	-54.0	2427	2448	7.7	-22.1	268.4	-810.8	73.8	23.1	-10.9
24TH	313.00	19.5	-55.6	2427	2448	8.0	-22.7	249.7	-756.8	63.6	19.7	-10.3
25TH	326.00	20.2	-57.1	2427	2448	8.3	-23.3	230.2	-701.2	54.1	16.6	-9.6
26TH	339.00	21.0	-58.7	2427	2448	8.6	-24.0	210.0	-644.1	45.4	13.7	-9.0
27TH	352.00	21.3	-59.8	2427	2448	8.8	-24.4	189.0	-585.4	37.4	11.1	-8.5
28TH	365.00	21.0	-60.0	2427	2448	8.7	-24.5	167.7	-525.6	30.2	8.8	-7.9
29TH	378.00	20.8	-60.2	2427	2448	8.6	-24.6	146.7	-465.6	23.7	6.8	-7.3
30TH	391.00	20.5	-60.5	2427	2448	8.5	-24.7	125.9	-405.4	18.1	5.0	-6.5
31ST	404.00	20.3	-60.7	2427	2448	8.3	-24.8	105.4	-344.9	13.2	3.5	-5.6
32ND	417.00	20.0	-62.2	2427	2448	8.2	-25.4	85.2	-284.2	9.1	2.3	-4.5
33RD	430.00	23.9	-63.9	2613	2287	9.1	-27.9	65.2	-222.0	5.8	1.3	-3.4
34TH	444.00	30.3	-76.4	3173	2777	9.6	-27.5	41.3	-158.1	3.1	.5	-2.6
35TH	461.00	12.8	-55.6	2975	3202	4.3	-17.4	11.0	-81.6	1.1	.1	-1.5
36TH	478.00	-1.6	-20.0	2275	2340	-.7	-8.6	-1.9	-26.1	.2	.0	-1.0
37TH	491.00	-2.3	-10.2	1170	2340	-2.0	-4.4	-.2	-6.0	-.0	.0	-.6
38TH	504.00	2.1	4.2	693	433	3.0	9.6	2.1	4.2	-.0	.0	-.0

TABLE 7. SHEAR AND MOMENT DIAGRAMS : BASS BROTHERS OFFICE BUILDING - PHASE II, FT. WORTH
WIND DIRECTION 270 CONFIGURATION C REFERENCE PRESSURE 26.0 PSF GUST FACTOR 1.32

FLOOR	HEIGHT FT	X-FORCE KIPS	Y-FORCE KIPS	X-AREA SQ FT	Y-AREA SQ FT	X-PRESS PSF	Y-PRESS PSF	X-SHEAR KIPS	Y-SHEAR KIPS	X-MOMENT 1000-FT-KIPS	Y-MOMENT 1000-FT-KIPS	Z-MOMENT 1000-FT-KIPS
GRND	0.00	-11.4	-22.5	3240	3060	-3.5	-7.4	191.1	-1452.2	400.9	72.5	-2.4
2ND	18.00	-10.5	-26.8	2700	3050	-3.9	-8.8	202.6	-1429.6	375.0	69.0	-2.5
3RD	33.00	-11.5	-34.7	3600	4067	-3.2	-8.5	213.0	-1402.8	353.7	65.8	-2.7
4TH	53.00	-3.9	-23.6	2340	2448	-1.7	-9.6	224.6	-1368.1	326.0	61.5	-3.0
5TH	66.00	-3.5	-25.8	2340	2448	-1.5	-10.5	228.5	-1344.6	308.4	58.5	-2.9
6TH	79.00	-3.1	-28.0	2340	2448	-1.3	-11.4	232.0	-1318.8	291.1	55.5	-2.9
7TH	92.00	-1.0	-30.2	2427	2448	-.4	-12.3	235.2	-1290.8	274.1	52.5	-2.8
8TH	105.00	-.1	-32.2	2427	2448	-.0	-13.1	236.2	-1260.6	257.5	49.4	-2.5
9TH	118.00	.9	-34.2	2427	2448	.4	-14.0	236.3	-1228.4	241.4	46.4	-2.4
10TH	131.00	1.8	-36.2	2427	2448	.8	-14.8	235.4	-1194.2	225.6	43.3	-2.2
11TH	144.00	2.8	-38.2	2427	2448	1.1	-15.6	233.6	-1158.0	210.3	40.2	-2.1
12TH	157.00	3.7	-40.1	2427	2448	1.5	-16.4	230.8	-1119.8	195.5	37.2	-2.0
13TH	170.00	5.0	-39.5	2427	2448	2.0	-16.1	227.1	-1079.7	181.2	34.2	-2.0
14TH	183.00	6.2	-39.1	2427	2448	2.6	-16.0	222.1	-1040.2	167.5	31.3	-1.9
15TH	196.00	7.2	-39.2	2427	2448	3.0	-16.0	215.9	-1001.1	154.2	28.5	-1.9
16TH	209.00	7.7	-38.9	2427	2448	3.2	-15.9	208.7	-961.8	141.4	25.7	-1.7
17TH	222.00	8.3	-38.6	2427	2448	3.4	-15.8	201.0	-922.9	129.2	23.1	-1.6
18TH	235.00	8.8	-38.3	2427	2448	3.6	-15.6	192.7	-884.3	117.4	20.5	-1.5
19TH	248.00	9.3	-38.3	2427	2448	3.8	-15.6	183.9	-846.0	106.2	18.1	-1.4
20TH	261.00	9.9	-39.6	2427	2448	4.1	-16.2	174.6	-807.7	95.4	15.7	-1.2
21ST	274.00	10.6	-41.0	2427	2448	4.4	-16.7	164.7	-768.1	85.2	13.5	-1.1
22ND	287.00	11.2	-42.3	2427	2448	4.6	-17.3	154.1	-727.1	75.5	11.4	-1.0
23RD	300.00	11.8	-43.7	2427	2448	4.9	-17.8	142.9	-684.8	66.3	9.5	-1.0
24TH	313.00	12.4	-45.0	2427	2448	5.1	-18.4	131.1	-641.1	57.7	7.7	-1.0
25TH	326.00	13.0	-46.3	2427	2448	5.4	-18.9	118.8	-596.1	49.6	6.1	-1.0
26TH	339.00	13.6	-47.7	2427	2448	5.6	-19.5	105.8	-549.8	42.2	4.6	-1.1
27TH	352.00	13.9	-48.2	2427	2448	5.7	-19.7	92.2	-502.1	35.3	3.4	-1.1
28TH	365.00	13.8	-47.5	2427	2448	5.7	-19.4	78.2	-453.9	29.1	2.3	-1.2
29TH	378.00	13.7	-46.8	2427	2448	5.6	-19.1	64.4	-406.4	23.5	1.3	-1.3
30TH	391.00	13.6	-46.2	2427	2448	5.6	-18.9	50.7	-359.6	18.6	.6	-1.3
31ST	404.00	13.5	-45.5	2427	2448	5.5	-18.6	37.1	-313.4	14.2	.0	-1.3
32ND	417.00	13.3	-46.2	2427	2448	5.5	-18.9	23.7	-268.0	10.4	-.4	-1.2
33RD	430.00	13.7	-50.3	2613	2287	5.2	-22.0	10.3	-221.8	7.2	-.6	-1.2
34TH	444.00	13.8	-62.0	3173	2777	4.4	-22.3	-3.4	-171.5	4.5	-.7	-1.2
35TH	461.00	-.7	-55.0	2975	3202	-.2	-17.2	-17.2	-109.5	2.1	-.5	-1.2
36TH	478.00	-9.8	-29.1	2275	2340	-4.3	-12.5	-16.5	-54.5	.7	-.2	-1.3
37TH	491.00	-6.5	-25.1	1170	2340	-5.5	-10.7	-8.7	-25.4	.2	-.0	-1.0
38TH	504.00	-.2	-.3	693	433	-.3	-.8	-.2	-.3	.0	-.0	-.0

TABLE 7. SHEAR AND MOMENT DIAGRAMS : BASS BROTHERS OFFICE BUILDING - PHASE II, FT. WORTH
WIND DIRECTION 280 CONFIGURATION C REFERENCE PRESSURE 26.0 PSF GUST FACTOR 1.32

FLOOR	HEIGHT FT	X-FORCE KIPS	Y-FORCE KIPS	X-AREA SQ FT	Y-AREA SQ FT	X-PRESS PSF	Y-PRESS PSF	X-SHEAR KIPS	Y-SHEAR KIPS	X-MOMENT 1000-FT-KIPS	Y-MOMENT 1000-FT-KIPS	Z-MOMENT 1000-FT-KIPS
GRND	0.00	-2.5	-11.6	3240	3060	-.8	-3.8	56.4	-594.2	124.5	13.9	-1.8
2ND	18.00	-5.7	-16.5	2700	3050	-2.1	-5.4	58.9	-582.6	113.9	12.9	-1.8
3RD	33.00	-9.7	-24.3	3600	4067	-2.7	-6.0	64.6	-566.1	105.3	11.9	-1.7
4TH	53.00	-3.7	-18.7	2340	2448	-1.6	-7.6	74.4	-541.8	94.2	10.5	-1.6
5TH	66.00	-3.6	-21.5	2340	2448	-1.5	-8.8	78.1	-523.1	87.3	9.6	-1.4
6TH	79.00	-3.6	-24.2	2340	2448	-1.5	-9.9	81.7	-501.6	80.6	8.5	-1.3
7TH	92.00	1.1	-26.7	2427	2448	.4	-10.9	85.3	-477.4	74.2	7.4	-1.1
8TH	105.00	1.7	-26.6	2427	2448	.7	-10.9	84.2	-450.7	68.2	6.3	-.7
9TH	118.00	2.4	-26.6	2427	2448	1.0	-10.9	82.5	-424.1	62.5	5.2	-.3
10TH	131.00	3.0	-26.5	2427	2448	1.2	-10.8	80.1	-397.5	57.2	4.2	.0
11TH	144.00	3.7	-26.5	2427	2448	1.5	-10.8	77.1	-370.9	52.2	3.2	.4
12TH	157.00	4.3	-26.4	2427	2448	1.8	-10.8	73.4	-344.4	47.5	2.2	.6
13TH	170.00	5.6	-24.4	2427	2448	2.3	-10.0	69.1	-318.0	43.2	1.3	.9
14TH	183.00	6.9	-22.5	2427	2448	2.8	-9.2	63.5	-293.6	39.2	.4	1.0
15TH	196.00	7.5	-21.0	2427	2448	3.1	-8.6	56.6	-271.0	35.6	-.4	1.1
16TH	209.00	7.0	-19.2	2427	2448	2.9	-7.8	49.1	-250.0	32.2	-1.1	1.2
17TH	222.00	6.4	-17.4	2427	2448	2.6	-7.1	42.1	-230.9	29.1	-1.7	1.2
18TH	235.00	5.9	-15.5	2427	2448	2.4	-6.3	35.7	-213.5	26.2	-2.2	1.1
19TH	248.00	5.4	-14.0	2427	2448	2.2	-5.7	29.9	-198.0	23.5	-2.6	.9
20TH	261.00	5.3	-13.5	2427	2448	2.2	-5.5	24.5	-184.0	21.0	-2.9	.7
21ST	274.00	5.2	-13.0	2427	2448	2.2	-5.3	19.1	-170.5	18.7	-3.2	.5
22ND	287.00	5.1	-12.5	2427	2448	2.1	-5.1	13.9	-157.4	16.6	-3.4	.3
23RD	300.00	5.1	-12.0	2427	2448	2.1	-4.9	8.8	-144.9	14.6	-3.6	.2
24TH	313.00	5.0	-11.5	2427	2448	2.0	-4.7	3.7	-132.9	12.8	-3.7	-.0
25TH	326.00	4.9	-11.1	2427	2448	2.0	-4.5	-1.3	-121.4	11.2	-3.7	-.2
26TH	339.00	4.8	-10.6	2427	2448	2.0	-4.3	-6.1	-110.3	9.7	-3.6	-.3
27TH	352.00	4.6	-9.9	2427	2448	1.9	-4.0	-10.9	-99.7	8.3	-3.5	-.4
28TH	365.00	4.1	-8.9	2427	2448	1.7	-3.6	-15.5	-89.9	7.1	-3.4	-.6
29TH	378.00	3.6	-7.9	2427	2448	1.5	-3.2	-19.6	-81.0	5.9	-3.1	-.7
30TH	391.00	3.1	-7.0	2427	2448	1.3	-2.8	-23.2	-73.0	4.9	-2.9	-.8
31ST	404.00	2.7	-6.0	2427	2448	1.1	-2.4	-26.3	-66.1	4.0	-2.5	-.8
32ND	417.00	2.2	-5.7	2427	2448	.9	-2.3	-29.0	-60.1	3.2	-2.2	-.9
33RD	430.00	1.5	-5.8	2613	2287	.6	-2.5	-31.2	-54.4	2.5	-1.8	-.9
34TH	444.00	-.9	-8.0	3173	2777	-.3	-2.9	-32.7	-48.5	1.8	-1.3	-1.0
35TH	461.00	-10.1	-12.6	2975	3202	-3.4	-3.9	-31.8	-40.5	1.0	-.8	-1.1
36TH	478.00	-10.7	-11.8	2275	2340	-4.7	-5.0	-21.7	-27.9	.4	-.3	-1.0
37TH	491.00	-7.8	-14.4	1170	2340	-6.6	-6.2	-11.0	-16.2	.1	-.1	-.8
38TH	504.00	-3.3	-1.7	693	433	-4.7	-4.0	-3.3	-1.7	.0	-.0	-.0

TABLE 7. SHEAR AND MOMENT DIAGRAMS : BASS BROTHERS OFFICE BUILDING - PHASE II, FT. WORTH
WIND DIRECTION 290 CONFIGURATION C REFERENCE PRESSURE 26.0 PSF GUST FACTOR 1.32

FLOOR	HEIGHT FT	X-FORCE KIPS	Y-FORCE KIPS	X-AREA SQ FT	Y-AREA SQ FT	X-PRESS PSF	Y-PRESS PSF	X-SHEAR KIPS	Y-SHEAR KIPS	X-MOMENT 1000-FT-KIPS	Y-MOMENT 1000-FT-KIPS	Z-MOMENT 1000-FT-KIPS
GRND	0.00	-6.1	-10.0	3240	3060	-1.9	-3.3	-28.7	-433.9	75.5	8.4	-6.3
2ND	18.00	-7.2	-15.5	2700	3050	-2.7	-5.1	-22.6	-423.9	67.8	8.9	-6.3
3RD	33.00	-10.5	-25.0	3600	4067	-2.9	-6.1	-15.3	-408.5	61.6	9.2	-6.2
4TH	53.00	-11.9	-20.3	2340	2448	-5.1	-8.3	-4.9	-383.5	53.7	9.4	-6.0
5TH	66.00	-12.1	-22.1	2340	2448	-5.2	-9.0	7.1	-363.2	48.8	9.3	-5.8
6TH	79.00	-12.2	-23.9	2340	2448	-5.2	-9.8	19.1	-341.1	44.2	9.2	-5.6
7TH	92.00	-7.5	-25.4	2427	2448	-3.1	-10.4	31.3	-317.2	39.9	8.8	-5.3
8TH	105.00	-7.0	-24.6	2427	2448	-2.9	-10.0	38.8	-291.8	36.0	8.4	-4.8
9TH	118.00	-6.4	-23.7	2427	2448	-2.6	-9.7	45.8	-267.2	32.4	7.8	-4.2
10TH	131.00	-5.8	-22.9	2427	2448	-2.4	-9.4	52.2	-243.5	29.0	7.2	-3.7
11TH	144.00	-5.2	-22.1	2427	2448	-2.1	-9.0	57.9	-220.6	26.0	6.5	-3.1
12TH	157.00	-4.6	-21.2	2427	2448	-1.9	-8.7	63.1	-198.5	23.3	5.7	-2.6
13TH	170.00	-2.0	-19.3	2427	2448	-.8	-7.9	67.7	-177.3	20.9	4.9	-2.0
14TH	183.00	.6	-17.4	2427	2448	.3	-7.1	69.6	-158.0	18.7	4.0	-1.6
15TH	196.00	2.8	-16.0	2427	2448	1.2	-6.5	69.0	-140.5	16.7	3.1	-1.2
16TH	209.00	4.0	-14.2	2427	2448	1.6	-5.8	66.2	-124.5	15.0	2.2	-1.0
17TH	222.00	5.2	-12.4	2427	2448	2.1	-5.1	62.2	-110.2	13.5	1.3	-.8
18TH	235.00	6.4	-10.6	2427	2448	2.6	-4.3	57.0	-97.8	12.1	.6	-.9
19TH	248.00	7.3	-9.0	2427	2448	3.0	-3.7	50.5	-87.2	10.9	-.1	-1.0
20TH	261.00	7.0	-8.2	2427	2448	2.9	-3.4	43.2	-78.1	9.9	-.7	-1.3
21ST	274.00	6.7	-7.4	2427	2448	2.8	-3.0	36.2	-69.9	8.9	-1.3	-1.6
22ND	287.00	6.4	-6.6	2427	2448	2.7	-2.7	29.5	-62.5	8.0	-1.7	-1.8
23RD	300.00	6.2	-5.7	2427	2448	2.5	-2.3	23.1	-56.0	7.3	-2.0	-1.9
24TH	313.00	5.9	-4.9	2427	2448	2.4	-2.0	16.9	-50.2	6.6	-2.3	-2.0
25TH	326.00	5.6	-4.1	2427	2448	2.3	-1.7	11.0	-45.3	6.0	-2.5	-2.1
26TH	339.00	5.3	-3.3	2427	2448	2.2	-1.3	5.4	-41.2	5.4	-2.6	-2.1
27TH	352.00	5.0	-2.4	2427	2448	2.1	-1.0	.1	-38.0	4.9	-2.6	-2.1
28TH	365.00	4.6	-1.3	2427	2448	1.9	-.6	-4.9	-35.6	4.4	-2.6	-2.0
29TH	378.00	4.3	-.3	2427	2448	1.8	-.1	-9.5	-34.2	3.9	-2.5	-1.9
30TH	391.00	3.9	.7	2427	2448	1.6	.3	-13.7	-33.9	3.5	-2.3	-1.8
31ST	404.00	3.5	1.7	2427	2448	1.5	.7	-17.6	-34.6	3.1	-2.1	-1.7
32ND	417.00	3.2	1.1	2427	2448	1.3	.5	-21.1	-36.3	2.6	-1.9	-1.6
33RD	430.00	2.6	.3	2613	2287	1.0	.1	-24.3	-37.4	2.1	-1.6	-1.5
34TH	444.00	.8	-2.8	3173	2777	.3	-1.0	-26.9	-37.7	1.6	-1.2	-1.4
35TH	461.00	-7.0	-7.5	2975	3202	-2.4	-2.3	-27.8	-34.9	1.0	-.8	-1.3
36TH	478.00	-8.9	-10.0	2275	2340	-3.9	-4.3	-20.8	-27.4	.4	-.3	-.9
37TH	491.00	-7.7	-14.8	1170	2340	-6.6	-6.3	-11.9	-17.4	.1	-.1	-.7
38TH	504.00	-4.2	-2.6	693	433	-6.1	-6.1	-4.2	-2.6	.0	-.0	-.0

TABLE 7. SHEAR AND MOMENT DIAGRAMS : BASS BROTHERS OFFICE BUILDING - PHASE II, FT. WORTH
WIND DIRECTION 300 CONFIGURATION C REFERENCE PRESSURE 26.0 PSF GUST FACTOR 1.32

FLOOR	HEIGHT FT	X-FORCE KIPS	Y-FORCE KIPS	X-AREA SQ FT	Y-AREA SQ FT	X-PRESS PSF	Y-PRESS PSF	X-SHEAR KIPS	Y-SHEAR KIPS	X-MOMENT 1000-FT-KIPS	Y-MOMENT 1000-FT-KIPS	Z-MOMENT 1000-FT-KIPS
GRND	0.00	-11.8	-12.1	3240	3060	-3.6	-4.0	-347.7	-414.0	94.4	-68.3	-17.1
2ND	18.00	-8.2	-15.2	2700	3050	-3.0	-5.0	-335.9	-401.8	87.0	-62.2	-16.8
3RD	33.00	-4.1	-19.0	3600	4067	-1.1	-4.7	-327.6	-386.6	81.1	-57.2	-16.5
4TH	53.00	-20.0	-13.5	2340	2448	-8.6	-5.5	-323.5	-367.6	73.6	-50.7	-16.3
5TH	66.00	-20.0	-14.4	2340	2448	-8.6	-5.9	-303.5	-354.1	68.9	-46.6	-16.0
6TH	79.00	-20.0	-15.4	2340	2448	-8.6	-6.3	-283.5	-339.7	64.4	-42.8	-15.6
7TH	92.00	-21.0	-16.1	2427	2448	-8.7	-6.6	-263.4	-324.3	60.0	-39.2	-15.2
8TH	105.00	-20.3	-15.8	2427	2448	-8.4	-6.4	-242.4	-308.2	55.9	-35.9	-14.7
9TH	118.00	-19.7	-15.4	2427	2448	-8.1	-6.3	-222.1	-292.4	52.0	-32.9	-14.3
10TH	131.00	-19.0	-15.1	2427	2448	-7.8	-6.2	-202.4	-277.0	48.3	-30.2	-13.8
11TH	144.00	-18.3	-14.7	2427	2448	-7.5	-6.0	-183.4	-261.9	44.8	-27.7	-13.3
12TH	157.00	-17.6	-14.4	2427	2448	-7.2	-5.9	-165.2	-247.2	41.5	-25.4	-12.8
13TH	170.00	-16.1	-13.2	2427	2448	-6.6	-5.4	-147.6	-232.8	38.4	-23.4	-12.2
14TH	183.00	-14.6	-12.1	2427	2448	-6.0	-5.0	-131.5	-219.6	35.5	-21.5	-11.7
15TH	196.00	-12.7	-11.6	2427	2448	-5.2	-4.7	-117.0	-207.5	32.7	-19.9	-11.2
16TH	209.00	-10.1	-10.6	2427	2448	-4.2	-4.3	-104.2	-195.9	30.1	-18.5	-10.6
17TH	222.00	-7.5	-9.5	2427	2448	-3.1	-3.9	-94.1	-185.3	27.6	-17.2	-10.2
18TH	235.00	-4.9	-8.4	2427	2448	-2.0	-3.4	-86.6	-175.8	25.2	-16.0	-9.9
19TH	248.00	-2.8	-7.6	2427	2448	-1.2	-3.1	-81.7	-167.4	23.0	-14.9	-9.7
20TH	261.00	-2.5	-8.0	2427	2448	-1.0	-3.3	-78.9	-159.8	20.9	-13.9	-9.6
21ST	274.00	-2.2	-8.3	2427	2448	-.9	-3.4	-76.4	-151.8	18.8	-12.9	-9.4
22ND	287.00	-1.9	-8.7	2427	2448	-.8	-3.5	-74.2	-143.5	16.9	-11.9	-9.2
23RD	300.00	-1.5	-9.0	2427	2448	-.6	-3.7	-72.3	-134.8	15.1	-10.9	-8.9
24TH	313.00	-1.2	-9.3	2427	2448	-.5	-3.8	-70.8	-125.8	13.4	-10.0	-8.6
25TH	326.00	-.9	-9.7	2427	2448	-.4	-4.0	-69.5	-116.5	11.8	-9.1	-8.3
26TH	339.00	-.6	-10.0	2427	2448	-.2	-4.1	-68.6	-106.8	10.4	-8.2	-7.9
27TH	352.00	-.7	-9.6	2427	2448	-.3	-3.9	-68.0	-96.8	9.1	-7.3	-7.5
28TH	365.00	-1.3	-8.0	2427	2448	-.5	-3.2	-67.3	-87.2	7.9	-6.4	-7.0
29TH	378.00	-2.0	-6.3	2427	2448	-.8	-2.6	-66.0	-79.3	6.8	-5.6	-6.5
30TH	391.00	-2.6	-4.7	2427	2448	-1.1	-1.9	-64.0	-73.0	5.8	-4.7	-5.9
31ST	404.00	-3.3	-3.1	2427	2448	-1.4	-1.3	-61.4	-68.3	4.9	-3.9	-5.3
32ND	417.00	-4.0	-3.2	2427	2448	-1.6	-1.3	-58.1	-65.2	4.0	-3.1	-4.6
33RD	430.00	-5.7	-2.0	2613	2287	-2.2	-.9	-54.1	-61.9	3.2	-2.4	-3.9
34TH	444.00	-9.4	-5.6	3173	2777	-3.0	-2.0	-48.4	-59.9	2.3	-1.7	-3.5
35TH	461.00	-13.2	-16.1	2975	3202	-4.4	-5.0	-39.0	-54.3	1.4	-.9	-2.9
36TH	478.00	-12.1	-15.4	2275	2340	-5.3	-6.6	-25.8	-38.2	.6	-.4	-1.7
37TH	491.00	-10.0	-19.8	1170	2340	-8.5	-8.5	-13.8	-22.8	.2	-.1	-1.0
38TH	504.00	-3.8	-3.0	693	433	-5.4	-6.9	-3.8	-3.0	.0	-.0	-.0

TABLE 7. SHEAR AND MOMENT DIAGRAMS : BASS BROTHERS OFFICE BUILDING - PHASE II, FT. WORTH
WIND DIRECTION 310 CONFIGURATION C REFERENCE PRESSURE 26.0 PSF GUST FACTOR 1.32

FLOOR	HEIGHT FT	X-FORCE KIPS	Y-FORCE KIPS	X-AREA SQ FT	Y-AREA SQ FT	X-PRESS PSF	Y-PRESS PSF	X-SHEAR KIPS	Y-SHEAR KIPS	X-MOMENT 1000-FT-KIPS	Y-MOMENT 1000-FT-KIPS	Z-MOMENT 1000-FT-KIPS
GRND	0.00	-27.7	-12.6	3240	3060	-8.5	-4.1	-1174.3	-288.2	64.4	-319.2	-22.4
2ND	18.00	-21.6	-16.3	2700	3050	-8.0	-5.3	-1146.7	-275.7	59.3	-298.3	-21.5
3RD	33.00	-9.5	-12.3	3600	4067	-2.6	-3.0	-1125.1	-259.4	55.3	-281.3	-20.8
4TH	53.00	-24.4	-6.8	2340	2448	-10.4	-2.8	-1115.6	-247.1	50.2	-258.9	-20.5
5TH	66.00	-20.3	-7.4	2340	2448	-8.7	-3.0	-1091.2	-240.3	47.0	-244.5	-20.0
6TH	79.00	-16.2	-7.9	2340	2448	-6.9	-3.2	-1070.9	-232.9	44.0	-230.5	-19.3
7TH	92.00	-29.4	-8.4	2427	2448	-12.1	-3.4	-1054.8	-225.0	41.0	-216.6	-18.5
8TH	105.00	-30.9	-8.0	2427	2448	-12.7	-3.3	-1025.4	-216.6	38.1	-203.1	-18.4
9TH	118.00	-32.4	-7.7	2427	2448	-13.4	-3.1	-994.5	-208.6	35.4	-190.0	-18.2
10TH	131.00	-33.9	-7.3	2427	2448	-14.0	-3.0	-962.1	-200.9	32.7	-177.3	-17.9
11TH	144.00	-35.5	-6.9	2427	2448	-14.6	-2.8	-928.1	-193.6	30.1	-165.0	-17.5
12TH	157.00	-37.0	-6.6	2427	2448	-15.2	-2.7	-892.6	-186.7	27.7	-153.2	-17.1
13TH	170.00	-36.6	-7.0	2427	2448	-15.1	-2.9	-855.7	-180.2	25.3	-141.8	-16.5
14TH	183.00	-36.2	-7.6	2427	2448	-14.9	-3.1	-819.1	-173.1	23.0	-130.9	-16.0
15TH	196.00	-35.6	-8.5	2427	2448	-14.7	-3.5	-782.8	-165.5	20.8	-120.5	-15.4
16TH	209.00	-34.4	-9.0	2427	2448	-14.2	-3.7	-747.2	-157.0	18.7	-110.5	-14.8
17TH	222.00	-33.2	-9.4	2427	2448	-13.7	-3.9	-712.8	-148.0	16.7	-101.1	-14.3
18TH	235.00	-32.0	-9.9	2427	2448	-13.2	-4.0	-679.6	-138.6	14.8	-92.0	-13.9
19TH	248.00	-31.1	-10.3	2427	2448	-12.8	-4.2	-647.6	-128.7	13.1	-83.4	-13.6
20TH	261.00	-31.3	-10.4	2427	2448	-12.9	-4.2	-616.4	-118.4	11.5	-75.2	-13.4
21ST	274.00	-31.4	-10.5	2427	2448	-12.9	-4.3	-585.2	-108.0	10.0	-67.4	-13.1
22ND	287.00	-31.5	-10.6	2427	2448	-13.0	-4.3	-553.8	-97.6	8.7	-59.9	-12.7
23RD	300.00	-31.7	-10.7	2427	2448	-13.1	-4.4	-522.2	-87.0	7.5	-53.0	-12.3
24TH	313.00	-31.8	-10.8	2427	2448	-13.1	-4.4	-490.5	-76.3	6.4	-46.4	-11.8
25TH	326.00	-32.0	-10.9	2427	2448	-13.2	-4.5	-458.7	-65.5	5.5	-40.2	-11.2
26TH	339.00	-32.1	-11.0	2427	2448	-13.2	-4.5	-426.7	-54.6	4.7	-34.4	-10.6
27TH	352.00	-32.6	-9.9	2427	2448	-13.4	-4.0	-394.6	-43.5	4.1	-29.1	-9.9
28TH	365.00	-33.7	-6.9	2427	2448	-13.9	-2.8	-362.0	-33.6	3.6	-24.2	-9.2
29TH	378.00	-34.8	-3.9	2427	2448	-14.4	-1.6	-328.3	-26.8	3.2	-19.7	-8.5
30TH	391.00	-35.9	-.9	2427	2448	-14.8	-.4	-293.4	-22.9	2.9	-15.7	-7.7
31ST	404.00	-37.0	2.1	2427	2448	-15.3	.9	-257.5	-22.0	2.6	-12.1	-7.0
32ND	417.00	-38.1	3.4	2427	2448	-15.7	1.4	-220.5	-24.2	2.3	-9.0	-6.2
33RD	430.00	-40.8	5.8	2613	2287	-15.6	2.5	-182.3	-27.5	1.9	-6.4	-5.4
34TH	444.00	-47.9	4.8	3173	2777	-15.1	1.7	-141.5	-33.3	1.5	-4.1	-5.1
35TH	461.00	-38.8	-11.7	2975	3202	-13.0	-3.7	-93.6	-38.2	.9	-2.1	-4.8
36TH	478.00	-27.6	-12.3	2275	2340	-12.1	-5.3	-54.8	-26.4	.4	-.8	-2.8
37TH	491.00	-18.1	-14.1	1170	2340	-15.5	-6.0	-27.2	-14.1	.1	-.3	-1.6
38TH	504.00	-9.1	-.0	693	433	-13.1	-.1	-9.1	-.0	.0	-.1	-.1

TABLE 7. SHEAR AND MOMENT DIAGRAMS : BASS BROTHERS OFFICE BUILDING - PHASE II, FT. WORTH
WIND DIRECTION 320 CONFIGURATION C REFERENCE PRESSURE 26.0 PSF GUST FACTOR 1.32

FLOOR	HEIGHT FT	X-FORCE KIPS	Y-FORCE KIPS	X-AREA SQ FT	Y-AREA SQ FT	X-PRESS PSF	Y-PRESS PSF	X-SHEAR KIPS	Y-SHEAR KIPS	X-MOMENT 1000-FT-KIPS	Y-MOMENT 1000-FT-KIPS	Z-MOMENT 1000-FT-KIPS
GRND	0.00	-31.6	-13.4	3240	3060	-9.7	-4.4	-1563.3	-193.6	27.4	-438.3	-14.3
2ND	18.00	-25.5	-17.4	2700	3050	-9.4	-5.7	-1531.7	-180.2	24.0	-410.4	-13.1
3RD	33.00	-13.4	-15.4	3600	4067	-3.7	-3.8	-1506.2	-162.8	21.5	-387.6	-12.2
4TH	53.00	-26.8	-6.5	2340	2448	-11.4	-2.7	-1492.8	-147.4	18.4	-357.6	-12.0
5TH	66.00	-20.0	-6.6	2340	2448	-8.5	-2.7	-1466.0	-140.9	16.5	-338.4	-11.3
6TH	79.00	-13.2	-6.6	2340	2448	-5.7	-2.7	-1446.0	-134.3	14.7	-319.5	-10.3
7TH	92.00	-28.0	-6.7	2427	2448	-11.5	-2.7	-1432.7	-127.7	13.0	-300.8	-9.1
8TH	105.00	-31.5	-6.7	2427	2448	-13.0	-2.7	-1404.7	-121.0	11.4	-282.3	-8.7
9TH	118.00	-35.0	-6.7	2427	2448	-14.4	-2.7	-1373.2	-114.3	9.8	-264.3	-8.4
10TH	131.00	-38.5	-6.7	2427	2448	-15.9	-2.8	-1338.2	-107.6	8.4	-246.6	-8.0
11TH	144.00	-42.0	-6.8	2427	2448	-17.3	-2.8	-1299.8	-100.9	7.0	-229.5	-7.7
12TH	157.00	-45.4	-6.8	2427	2448	-18.7	-2.8	-1257.8	-94.1	5.8	-212.9	-7.5
13TH	170.00	-46.9	-7.1	2427	2448	-19.3	-2.9	-1212.4	-87.3	4.6	-196.8	-7.2
14TH	183.00	-48.3	-7.6	2427	2448	-19.9	-3.1	-1165.5	-80.2	3.5	-181.4	-7.0
15TH	196.00	-49.0	-8.4	2427	2448	-20.2	-3.4	-1117.2	-72.7	2.5	-166.5	-6.7
16TH	209.00	-48.0	-8.5	2427	2448	-19.8	-3.5	-1068.2	-64.3	1.6	-152.3	-6.4
17TH	222.00	-47.0	-8.6	2427	2448	-19.4	-3.5	-1020.2	-55.8	.8	-138.7	-6.2
18TH	235.00	-46.0	-8.7	2427	2448	-19.0	-3.6	-973.2	-47.2	.2	-125.8	-6.0
19TH	248.00	-45.4	-8.8	2427	2448	-18.7	-3.6	-927.2	-38.5	-.4	-113.4	-5.9
20TH	261.00	-46.1	-8.6	2427	2448	-19.0	-3.5	-881.8	-29.7	-.8	-101.7	-5.8
21ST	274.00	-46.9	-8.5	2427	2448	-19.3	-3.5	-835.6	-21.1	-1.2	-90.5	-5.7
22ND	287.00	-47.6	-8.3	2427	2448	-19.6	-3.4	-788.8	-12.6	-1.4	-80.0	-5.6
23RD	300.00	-48.4	-8.2	2427	2448	-19.9	-3.3	-741.1	-4.3	-1.5	-70.0	-5.5
24TH	313.00	-49.1	-8.0	2427	2448	-20.2	-3.3	-692.7	3.8	-1.5	-60.7	-5.3
25TH	326.00	-49.9	-7.9	2427	2448	-20.6	-3.2	-643.6	11.8	-1.4	-52.0	-5.2
26TH	339.00	-50.6	-7.7	2427	2448	-20.9	-3.1	-593.7	19.7	-1.2	-44.0	-5.0
27TH	352.00	-51.6	-5.9	2427	2448	-21.3	-2.4	-543.1	27.4	-.9	-36.6	-4.9
28TH	365.00	-53.0	-1.4	2427	2448	-21.8	-.6	-491.5	33.2	-.5	-29.8	-4.7
29TH	378.00	-54.3	3.0	2427	2448	-22.4	1.2	-438.5	34.6	-.0	-23.8	-4.6
30TH	391.00	-55.7	7.5	2427	2448	-22.9	3.0	-384.2	31.6	.4	-18.5	-4.4
31ST	404.00	-57.0	11.9	2427	2448	-23.5	4.9	-328.5	24.2	.8	-13.8	-4.3
32ND	417.00	-58.4	12.7	2427	2448	-24.0	5.2	-271.5	12.3	1.0	-9.9	-4.2
33RD	430.00	-58.0	14.1	2613	2287	-22.2	6.1	-213.2	-.4	1.1	-6.8	-4.2
34TH	444.00	-61.3	11.6	3173	2777	-19.3	4.2	-155.2	-14.5	1.0	-4.2	-4.5
35TH	461.00	-40.3	-6.8	2975	3202	-13.6	-2.1	-93.9	-26.1	.6	-2.1	-4.7
36TH	478.00	-26.7	-10.5	2275	2340	-11.7	-4.5	-53.6	-19.2	.2	-.8	-2.9
37TH	491.00	-17.6	-9.2	1170	2340	-15.0	-3.9	-26.9	-8.8	.1	-.3	-1.8
38TH	504.00	-9.3	.4	693	433	-13.5	.9	-9.3	.4	-.0	-.1	-.1

TABLE 7. SHEAR AND MOMENT DIAGRAMS : BASS BROTHERS OFFICE BUILDING - PHASE II, FT. WORTH
WIND DIRECTION 330 CONFIGURATION C REFERENCE PRESSURE 26.0 PSF GUST FACTOR 1.32

FLOOR	HEIGHT FT	X-FORCE KIPS	Y-FORCE KIPS	X-AREA SQ FT	Y-AREA SQ FT	X-PRESS PSF	Y-PRESS PSF	X-SHEAR KIPS	Y-SHEAR KIPS	X-MOMENT	Y-MOMENT 1000-FT-KIPS	Z-MOMENT
GRND	0.00	-41.8	-13.0	3240	3060	-12.9	-4.3	-1647.7	-452.0	115.4	-440.0	-24.5
2ND	18.00	-35.8	-14.7	2700	3050	-13.3	-4.8	-1605.9	-438.9	107.4	-410.7	-23.2
3RD	33.00	-26.9	-15.5	3600	4067	-7.5	-3.8	-1570.1	-424.2	100.9	-386.9	-22.1
4TH	53.00	-32.9	-6.6	2340	2448	-14.1	-2.7	-1543.3	-408.7	92.6	-355.8	-21.0
5TH	66.00	-26.8	-7.1	2340	2448	-11.5	-2.9	-1510.3	-402.1	87.3	-335.9	-19.8
6TH	79.00	-20.8	-7.5	2340	2448	-8.9	-3.1	-1483.5	-395.0	82.1	-316.5	-18.3
7TH	92.00	-36.0	-8.1	2427	2448	-14.8	-3.3	-1462.7	-387.4	77.1	-297.3	-16.7
8TH	105.00	-38.4	-9.2	2427	2448	-15.8	-3.8	-1426.7	-379.4	72.1	-278.5	-15.9
9TH	118.00	-40.8	-10.3	2427	2448	-16.8	-4.2	-1388.3	-370.2	67.2	-260.2	-15.2
10TH	131.00	-43.2	-11.4	2427	2448	-17.8	-4.7	-1347.5	-359.8	62.5	-242.4	-14.6
11TH	144.00	-45.6	-12.6	2427	2448	-18.8	-5.1	-1304.2	-348.4	57.8	-225.2	-14.0
12TH	157.00	-48.0	-13.7	2427	2448	-19.8	-5.6	-1258.6	-335.8	53.4	-208.5	-13.5
13TH	170.00	-49.1	-13.6	2427	2448	-20.2	-5.6	-1210.6	-322.2	49.1	-192.5	-13.0
14TH	183.00	-50.2	-13.6	2427	2448	-20.7	-5.6	-1161.5	-308.5	45.0	-177.1	-12.6
15TH	196.00	-50.7	-14.2	2427	2448	-20.9	-5.8	-1111.2	-294.9	41.1	-162.3	-12.2
16TH	209.00	-49.8	-14.2	2427	2448	-20.5	-5.8	-1060.6	-280.7	37.4	-148.2	-11.9
17TH	222.00	-48.9	-14.1	2427	2448	-20.2	-5.8	-1010.7	-266.6	33.8	-134.7	-11.6
18TH	235.00	-48.0	-14.0	2427	2448	-19.8	-5.7	-961.8	-252.5	30.4	-121.9	-11.4
19TH	248.00	-47.4	-14.0	2427	2448	-19.5	-5.7	-913.8	-238.5	27.2	-109.7	-11.3
20TH	261.00	-47.7	-14.3	2427	2448	-19.7	-5.8	-866.4	-224.4	24.2	-98.1	-11.2
21ST	274.00	-48.1	-14.6	2427	2448	-19.8	-6.0	-818.6	-210.1	21.4	-87.2	-11.1
22ND	287.00	-48.4	-14.9	2427	2448	-19.9	-6.1	-770.6	-195.5	18.8	-76.9	-10.9
23RD	300.00	-48.7	-15.1	2427	2448	-20.1	-6.2	-722.2	-180.7	16.3	-67.2	-10.6
24TH	313.00	-49.0	-15.4	2427	2448	-20.2	-6.3	-673.5	-165.6	14.1	-58.1	-10.3
25TH	326.00	-49.4	-15.7	2427	2448	-20.3	-6.4	-624.4	-150.2	12.0	-49.7	-10.0
26TH	339.00	-49.7	-15.9	2427	2448	-20.5	-6.5	-575.0	-134.5	10.2	-41.9	-9.6
27TH	352.00	-50.5	-15.5	2427	2448	-20.8	-6.3	-525.3	-118.5	8.5	-34.7	-9.1
28TH	365.00	-52.0	-14.0	2427	2448	-21.4	-5.7	-474.8	-103.0	7.1	-28.2	-8.5
29TH	378.00	-53.5	-12.5	2427	2448	-22.1	-5.1	-422.8	-89.1	5.8	-22.4	-8.0
30TH	391.00	-55.0	-10.9	2427	2448	-22.7	-4.5	-369.3	-76.6	4.8	-17.2	-7.6
31ST	404.00	-56.6	-9.4	2427	2448	-23.3	-3.8	-314.3	-65.7	3.8	-12.8	-7.1
32ND	417.00	-58.1	-8.1	2427	2448	-23.9	-3.3	-257.7	-56.3	3.0	-9.1	-6.6
33RD	430.00	-57.7	-2.1	2613	2287	-22.1	-.9	-199.6	-48.2	2.4	-6.1	-6.2
34TH	444.00	-59.9	-1.9	3173	2777	-18.9	-.7	-141.9	-46.0	1.7	-3.7	-6.1
35TH	461.00	-36.0	-17.2	2975	3202	-12.1	-5.4	-82.0	-44.1	.9	-1.8	-5.8
36TH	478.00	-23.1	-14.9	2275	2340	-10.1	-6.4	-46.0	-26.9	.3	-.7	-3.3
37TH	491.00	-14.7	-12.1	1170	2340	-12.6	-5.2	-22.9	-12.0	.1	-.3	-1.8
38TH	504.00	-8.2	.1	693	433	-11.9	.2	-8.2	.1	-.0	-.1	-.1

TABLE 7. SHEAR AND MOMENT DIAGRAMS : BASS BROTHERS OFFICE BUILDING - PHASE II, FT. WORTH
WIND DIRECTION 340 CONFIGURATION C REFERENCE PRESSURE 26.0 PSF GUST FACTOR 1.32

FLOOR	HEIGHT FT	X-FORCE KIPS	Y-FORCE KIPS	X-AREA SQ FT	Y-AREA SQ FT	X-PRESS PSF	Y-PRESS PSF	X-SHEAR KIPS	Y-SHEAR KIPS	X-MOMENT	Y-MOMENT	Z-MOMENT
										1000-FT-KIPS		
GRND	0.00	-45.9	-2.5	3240	3060	-14.2	-.8	-1720.4	-464.1	129.3	-452.0	-34.1
2ND	18.00	-37.9	-6.8	2700	3050	-14.0	-2.2	-1674.5	-461.6	120.9	-421.4	-32.8
3RD	33.00	-32.4	-10.8	3600	4067	-9.0	-2.7	-1636.6	-454.8	114.1	-396.6	-31.8
4TH	53.00	-36.9	-2.5	2340	2448	-15.8	-1.0	-1604.2	-444.0	105.1	-364.2	-30.7
5TH	66.00	-31.3	-3.0	2340	2448	-13.4	-1.2	-1567.3	-441.6	99.3	-343.6	-29.4
6TH	79.00	-25.8	-3.5	2340	2448	-11.0	-1.4	-1536.0	-438.6	93.6	-323.4	-27.9
7TH	92.00	-39.6	-4.3	2427	2448	-16.3	-1.8	-1510.3	-435.0	87.9	-303.6	-26.2
8TH	105.00	-41.6	-6.8	2427	2448	-17.1	-2.8	-1470.7	-430.7	82.3	-284.2	-25.3
9TH	118.00	-43.6	-9.2	2427	2448	-18.0	-3.8	-1429.1	-423.9	76.7	-265.4	-24.4
10TH	131.00	-45.6	-11.7	2427	2448	-18.8	-4.8	-1385.5	-414.7	71.3	-247.1	-23.6
11TH	144.00	-47.7	-14.2	2427	2448	-19.6	-5.8	-1339.8	-403.0	66.0	-229.4	-22.7
12TH	157.00	-49.7	-16.6	2427	2448	-20.5	-6.8	-1292.2	-388.8	60.8	-212.3	-22.0
13TH	170.00	-50.7	-16.1	2427	2448	-20.9	-6.6	-1242.5	-372.2	55.9	-195.8	-21.3
14TH	183.00	-51.7	-15.7	2427	2448	-21.3	-6.4	-1191.8	-356.1	51.2	-180.0	-20.6
15TH	196.00	-52.2	-15.6	2427	2448	-21.5	-6.4	-1140.2	-340.3	46.6	-164.8	-20.0
16TH	209.00	-51.7	-15.4	2427	2448	-21.3	-6.3	-1088.0	-324.8	42.3	-150.3	-19.4
17TH	222.00	-51.2	-15.2	2427	2448	-21.1	-6.2	-1036.3	-309.4	38.2	-136.5	-18.8
18TH	235.00	-50.7	-15.0	2427	2448	-20.9	-6.1	-985.1	-294.3	34.3	-123.4	-18.3
19TH	248.00	-50.3	-14.9	2427	2448	-20.7	-6.1	-934.5	-279.3	30.5	-110.9	-17.8
20TH	261.00	-50.5	-15.4	2427	2448	-20.8	-6.3	-884.1	-264.4	27.0	-99.1	-17.3
21ST	274.00	-50.6	-15.9	2427	2448	-20.9	-6.5	-833.7	-249.0	23.7	-87.9	-16.7
22ND	287.00	-50.7	-16.3	2427	2448	-20.9	-6.7	-783.1	-233.1	20.5	-77.4	-16.0
23RD	300.00	-50.9	-16.8	2427	2448	-21.0	-6.9	-732.3	-216.8	17.6	-67.5	-15.2
24TH	313.00	-51.0	-17.3	2427	2448	-21.0	-7.1	-681.5	-200.0	14.9	-58.4	-14.4
25TH	326.00	-51.2	-17.8	2427	2448	-21.1	-7.3	-630.4	-182.7	12.4	-49.8	-13.5
26TH	339.00	-51.3	-18.3	2427	2448	-21.2	-7.5	-579.2	-164.9	10.1	-42.0	-12.5
27TH	352.00	-51.8	-18.7	2427	2448	-21.4	-7.6	-527.9	-146.6	8.1	-34.8	-11.4
28TH	365.00	-52.9	-19.2	2427	2448	-21.8	-7.8	-476.1	-127.9	6.3	-28.2	-10.3
29TH	378.00	-54.0	-19.6	2427	2448	-22.2	-8.0	-423.2	-108.7	4.8	-22.4	-9.3
30TH	391.00	-55.0	-20.1	2427	2448	-22.7	-8.2	-369.2	-89.1	3.5	-17.2	-8.5
31ST	404.00	-56.1	-20.5	2427	2448	-23.1	-8.4	-314.1	-69.1	2.5	-12.8	-7.8
32ND	417.00	-57.2	-16.7	2427	2448	-23.6	-6.8	-258.0	-48.5	1.7	-9.1	-7.3
33RD	430.00	-57.5	-8.2	2613	2287	-22.0	-3.6	-200.9	-31.8	1.2	-6.1	-6.8
34TH	444.00	-60.7	-.6	3173	2777	-19.1	-.2	-143.4	-23.6	.8	-3.7	-6.4
35TH	461.00	-37.2	-10.5	2975	3202	-12.5	-3.3	-82.6	-23.0	.4	-1.8	-5.4
36TH	478.00	-23.4	-8.8	2275	2340	-10.3	-3.7	-45.4	-12.5	.1	-.7	-3.1
37TH	491.00	-14.4	-5.6	1170	2340	-12.3	-2.4	-22.0	-3.7	.0	-.2	-1.6
38TH	504.00	-7.7	1.8	693	433	-11.1	4.3	-7.7	1.8	-.0	-.0	-.1

TABLE 7. SHEAR AND MOMENT DIAGRAMS : BASS BROTHERS OFFICE BUILDING - PHASE II, FT. WORTH
WIND DIRECTION 350 CONFIGURATION C REFERENCE PRESSURE 26.0 PSF GUST FACTOR 1.32

FLOOR	HEIGHT FT	X-FORCE KIPS	Y-FORCE KIPS	X-AREA SQ FT	Y-AREA SQ FT	X-PRESS PSF	Y-PRESS PSF	X-SHEAR KIPS	Y-SHEAR KIPS	X-MOMENT 1000-FT-KIPS	Y-MOMENT 1000-FT-KIPS	Z-MOMENT 1000-FT-KIPS
GRND	0.00	-51.7	11.9	3240	3060	-16.0	3.9	-1894.3	133.9	-25.4	-488.2	-32.0
2ND	18.00	-43.5	7.6	2700	3050	-16.1	2.5	-1842.6	122.0	-23.1	-454.6	-30.7
3RD	33.00	-39.7	8.1	3600	4067	-11.0	2.0	-1799.1	114.4	-21.3	-427.3	-29.9
4TH	53.00	-40.7	11.6	2340	2448	-17.4	4.7	-1759.4	106.3	-19.1	-391.7	-29.1
5TH	66.00	-37.3	10.9	2340	2448	-15.9	4.4	-1718.7	94.7	-17.8	-369.1	-28.1
6TH	79.00	-33.8	10.2	2340	2448	-14.4	4.2	-1681.4	83.8	-16.6	-347.0	-26.9
7TH	92.00	-46.0	9.4	2427	2448	-19.0	3.8	-1647.6	73.6	-15.6	-325.3	-25.5
8TH	105.00	-47.8	7.6	2427	2448	-19.7	3.1	-1601.6	64.2	-14.7	-304.2	-24.7
9TH	118.00	-49.5	5.8	2427	2448	-20.4	2.4	-1553.9	56.6	-13.9	-283.7	-23.9
10TH	131.00	-51.3	4.0	2427	2448	-21.1	1.6	-1504.4	50.8	-13.2	-263.8	-23.1
11TH	144.00	-53.0	2.2	2427	2448	-21.8	.9	-1453.1	46.7	-12.6	-244.6	-22.4
12TH	157.00	-54.8	.4	2427	2448	-22.6	.2	-1400.1	44.5	-12.0	-226.1	-21.7
13TH	170.00	-55.2	.4	2427	2448	-22.8	.1	-1345.3	44.1	-11.4	-208.2	-21.0
14TH	183.00	-55.7	.3	2427	2448	-22.9	.1	-1290.1	43.7	-10.9	-191.1	-20.3
15TH	196.00	-56.1	-.0	2427	2448	-23.1	-.0	-1234.4	43.5	-10.3	-174.7	-19.6
16TH	209.00	-56.5	.1	2427	2448	-23.3	.0	-1178.3	43.5	-9.7	-159.0	-18.9
17TH	222.00	-57.0	.2	2427	2448	-23.5	.1	-1121.8	43.4	-9.2	-144.0	-18.3
18TH	235.00	-57.4	.4	2427	2448	-23.6	.2	-1064.8	43.2	-8.6	-129.8	-17.6
19TH	248.00	-57.7	.6	2427	2448	-23.8	.2	-1007.4	42.8	-8.0	-116.4	-17.0
20TH	261.00	-57.5	.8	2427	2448	-23.7	.3	-949.8	42.2	-7.5	-103.6	-16.4
21ST	274.00	-57.4	1.0	2427	2448	-23.7	.4	-892.2	41.4	-6.9	-91.7	-15.7
22ND	287.00	-57.3	1.2	2427	2448	-23.6	.5	-834.8	40.4	-6.4	-80.4	-14.9
23RD	300.00	-57.2	1.4	2427	2448	-23.6	.6	-777.6	39.2	-5.9	-70.0	-14.1
24TH	313.00	-57.0	1.7	2427	2448	-23.5	.7	-720.4	37.8	-5.4	-60.2	-13.2
25TH	326.00	-56.9	1.9	2427	2448	-23.4	.8	-663.4	36.1	-4.9	-51.2	-12.3
26TH	339.00	-56.8	2.1	2427	2448	-23.4	.9	-606.5	34.2	-4.5	-43.0	-11.2
27TH	352.00	-56.8	1.7	2427	2448	-23.4	.7	-549.7	32.2	-4.0	-35.5	-10.2
28TH	365.00	-57.1	.3	2427	2448	-23.5	.1	-492.9	30.5	-3.6	-28.7	-9.1
29TH	378.00	-57.4	-1.0	2427	2448	-23.7	-.4	-435.8	30.1	-3.2	-22.6	-8.2
30TH	391.00	-57.8	-2.3	2427	2448	-23.8	-1.0	-378.3	31.1	-2.8	-17.3	-7.4
31ST	404.00	-58.1	-3.7	2427	2448	-23.9	-1.5	-320.6	33.5	-2.4	-12.8	-6.7
32ND	417.00	-58.4	-.3	2427	2448	-24.1	-.1	-262.5	37.1	-1.9	-9.0	-6.2
33RD	430.00	-60.0	4.0	2613	2287	-23.0	1.7	-204.2	37.5	-1.5	-6.0	-5.8
34TH	444.00	-64.7	13.4	3173	2777	-20.4	4.8	-144.1	33.5	-1.0	-3.5	-5.0
35TH	461.00	-37.4	7.9	2975	3202	-12.6	2.5	-79.5	20.1	-.5	-1.6	-3.9
36TH	478.00	-22.9	4.0	2275	2340	-10.1	1.7	-42.1	12.2	-.2	-.6	-2.1
37TH	491.00	-12.8	4.9	1170	2340	-10.9	2.1	-19.2	8.2	-.1	-.2	-1.1
38TH	504.00	-6.4	3.3	693	433	-9.2	7.7	-6.4	3.3	-.0	-.0	-.1

TABLE 7. BASS BROTHERS OFFICE BUILDING - PHASE I, FT. WORTH

PROJECT 3715
SCALE = 400
GUST FACTOR = 1.32
NUMBER OF SIDES = 4

CONFIGURATION A
REF. PRESSURE = 26.0
STANDARD FLOOR HEIGHT = 13.00
NO. OF FLOORS = 35

SIDE	ANGLE	Z-AXIS
1	90.0	2.800
2	0.0	2.800
3	270.0	2.800
4	180.0	2.800

FLOOR #	LABEL	HEIGHT-FT
1	GRND	20.00
2	2ND	22.50
3	3RD	13.00
4	4TH	13.00
5	5TH	13.00
6	6TH	13.00
7	7TH	13.00
8	8TH	13.00
9	9TH	13.00
10	10TH	13.00
11	11TH	13.00
12	12TH	13.00
13	13TH	13.00
14	14TH	13.00
15	15TH	13.00
16	16TH	13.00
17	17TH	13.00
18	18TH	13.00
19	19TH	13.00
20	20TH	13.00
21	21ST	13.00
22	22ND	13.00
23	23RD	13.00
24	24TH	13.00
25	25TH	13.00
26	26TH	13.00
27	27TH	13.00
28	28TH	13.00
29	29TH	13.00
30	30TH	14.00
31	31ST	17.00
32	32ND	17.00
33	33RD	13.00
34	34TH	13.00
35	35TH	13.00

TABLE 7. BASS BROTHERS OFFICE BUILDING - PHASE II, FT. WORTH

PROJECT 6990 CONFIGURATION C
SCALE = 400 REF. PRESSURE = 26.0
GUST FACTOR = 1.32 STANDARD FLOOR HEIGHT = 13.00
NUMBER OF SIDES = 4 NO. OF FLOORS = 38

SIDE	ANGLE	Z-AXIS
1	0.0	2.800
2	90.0	3.300
3	180.0	2.800
4	270.0	2.800

FLOOR #	LABEL	HEIGHT-FT
1	GRND	18.00
2	2ND	15.00
3	3RD	20.00
4	4TH	13.00
5	5TH	13.00
6	6TH	13.00
7	7TH	13.00
8	8TH	13.00
9	9TH	13.00
10	10TH	13.00
11	11TH	13.00
12	12TH	13.00
13	13TH	13.00
14	14TH	13.00
15	15TH	13.00
16	16TH	13.00
17	17TH	13.00
18	18TH	13.00
19	19TH	13.00
20	20TH	13.00
21	21ST	13.00
22	22ND	13.00
23	23RD	13.00
24	24TH	13.00
25	25TH	13.00
26	26TH	13.00
27	27TH	13.00
28	28TH	13.00
29	29TH	13.00
30	30TH	13.00
31	31ST	13.00
32	32ND	13.00
33	33RD	14.00
34	34TH	17.00
35	35TH	17.00
36	36TH	13.00
37	37TH	13.00
38	38TH	13.00

APPENDIX A

PRESSURE DATA

Note: Pressure coefficients are defined in Section 4.3.

Pressure tap designation is explained in Figure 3.

APPENDIX A -- PRESSURE DATA: BASS BROTHERS BUILDING - PHASE I, DALLAS, TEXAS -- CONFIGURATION A

WD	TAP	CPMEAN	CPRMS	CPMAX	CPMIN
0	101	.175	.136	.624	-.214
0	102	-.105	.102	.345	-.402
0	103	.267	.150	.915	-.150
0	104	.145	.145	.679	-.226
0	105	.205	.211	.877	-.416
0	106	.154	.123	.655	-.274
0	107	.215	.136	.844	-.266
0	108	.124	.161	.682	-.579
0	109	.036	.130	.781	-.352
0	110	.387	.176	.951	-.418
0	111	.120	.113	.624	-.310
0	112	.151	.121	.514	-.237
0	113	.365	.171	.956	-.289
0	114	.347	.134	.789	-.008
0	115	.226	.123	.741	-.169
0	116	.411	.174	.961	-.433
0	117	.279	.145	.768	-.271
0	118	.299	.153	.794	-.184
0	119	.337	.161	.835	-.126
0	120	.325	.119	.719	.001
0	121	.198	.104	.576	-.056
0	122	-.032	.079	.288	-.252
0	123	-.172	.065	.171	-.347
0	124	.336	.181	.889	-.510
0	125	.224	.130	.783	-.134
0	126	.226	.138	.784	-.154
0	127	.269	.152	.815	-.109
0	128	.254	.111	.719	-.021
0	129	.050	.095	.427	-.325
0	130	-.053	.073	.308	-.260
0	131	-.225	.061	.112	-.428
0	133	.098	.083	.429	-.273
0	134	.093	.092	.423	-.276
0	135	.121	.116	.571	-.203
0	136	.126	.080	.495	-.147
0	137	.072	.069	.389	-.146
0	139	-.395	.074	-.119	-.631
0	140	.103	.096	.482	-.431
0	141	.063	.068	.378	-.236
0	142	.091	.072	.417	-.340
0	143	.139	.090	.506	-.261
0	144	.103	.070	.384	-.101
0	145	.064	.069	.341	-.126
0	146	-.061	.079	.378	-.252
0	147	-.401	.079	-.067	-.624
0	148	.100	.090	.506	-.159
0	149	.098	.080	.479	-.102
0	150	.050	.076	.372	-.295
0	151	-.002	.072	.264	-.263
0	152	.097	.066	.370	-.114

WD	TAP	CPMEAN	CPRMS	CPMAX	CPMIN
0	153	-.503	.111	-.179	-1.136
0	154	.022	.062	.270	-.177
0	155	-.330	.064	-.151	-.636
0	156	.074	.076	.463	-.131
0	157	.039	.067	.332	-.171
0	158	-.005	.084	.331	-.199
0	159	-.337	.087	.005	-.729
0	160	-.241	.077	.036	-.620
0	161	-.415	.067	-.213	-.935
0	162	.083	.098	.467	-.343
0	163	.060	.114	.577	-.592
0	164	-1.106	.341	-.440	-2.447
0	165	-.928	.196	-.427	-1.752
0	166	.072	.107	.479	-.358
0	167	.067	.083	.405	-.140
0	168	-.078	.082	.273	-.282
0	169	-.274	.078	.023	-.630
0	170	-.641	.141	.020	-1.078
0	171	-.662	.202	.406	-1.250
0	201	-.522	.090	-.090	-1.001
0	202	-.169	.094	.335	-.675
0	203	-.530	.097	-.265	-.973
0	204	-.257	.071	.018	-.571
0	205	-.116	.209	.642	-.756
0	206	.318	.143	.738	-.329
0	207	.256	.155	.693	-.342
0	208	-.577	.193	-.045	-1.331
0	209	.037	.099	.413	-.239
0	210	.171	.122	.583	-.189
0	211	.199	.127	.670	-.174
0	212	.134	.094	.441	-.147
0	213	.091	.092	.401	-.182
0	214	-.854	.190	-.265	-1.509
0	215	-.045	.088	.333	-.351
0	216	.252	.112	.738	-.060
0	217	.339	.127	.833	-.035
0	218	.281	.103	.650	.003
0	219	.275	.113	.713	-.036
0	220	.315	.166	.872	-.563
0	221	.301	.211	.984	-.536
0	222	-.780	.201	-.096	-1.682
0	223	-.165	.087	.253	-.448
0	224	.172	.102	.741	-.121
0	225	.235	.127	.791	-.131
0	225	.235	.127	.791	-.131
0	226	.227	.097	.697	-.009
0	227	.232	.093	.616	-.040
0	228	.263	.147	.792	-.529
0	229	.245	.185	.909	-.475
0	230	-.679	.170	-.223	-1.498

WD	TAP	CPMEAN	CPRMS	CPMAX	CPMIN
0	232	.111	.106	.529	-.263
0	233	-.196	.097	.242	-.615
0	234	-.044	.089	.366	-.376
0	235	.070	.079	.449	-.151
0	236	.186	.082	.506	-.003
0	237	.093	.098	.488	-.169
0	239	.212	.105	.615	-.205
0	240	.222	.132	.699	-.402
0	241	-.364	.091	-.057	-.872
0	242	-.446	.102	-.173	-.929
0	243	-.286	.088	.057	-.746
0	244	.031	.064	.375	-.110
0	245	.153	.081	.537	-.034
0	249	-.428	.087	-.075	-.798
0	250	.053	.083	.371	-.266
0	252	-.479	.090	-.198	-.847
0	253	-.501	.088	-.203	-.911
0	254	-.258	.065	-.039	-.538
0	255	.082	.072	.355	-.093
0	256	.012	.098	.408	-.345
0	257	-.096	.095	.222	-.511
0	258	-.013	.132	.480	-.523
0	259	-.177	.057	-.006	-.466
0	260	.101	.072	.401	-.116
0	261	-.272	.110	.240	-.653
0	262	-.405	.074	-.129	-.724
0	263	-.597	.154	.143	-1.212
0	264	-.239	.069	.034	-.567
0	265	-.114	.051	.109	-.264
0	266	.011	.085	.379	-.242
0	267	-.054	.081	.279	-.281
0	268	-.032	.076	.264	-.308
0	269	-.004	.096	.363	-.486
0	270	-.726	.091	-.486	-1.157
0	271	-.386	.079	-.087	-.662
0	272	.001	.087	.345	-.202
0	273	.037	.122	.454	-.625
0	280	-.018	.085	.295	-.377
0	301	-.678	.089	-.424	-1.189
0	302	-.502	.128	-.129	-1.104
0	303	-.468	.107	-.118	-1.007
0	304	-.459	.100	-.103	-.841
0	305	-.457	.112	-.113	-1.116
0	306	-.351	.106	.025	-.735
0	307	-.543	.138	-.140	-1.247
0	308	-.638	.086	-.374	-1.137
0	309	-.512	.076	-.282	-.895
0	310	-.509	.073	-.301	-.819
0	311	-.454	.066	-.277	-.778
0	312	-.610	.080	-.410	-.903

APPENDIX A -- PRESSURE DATA: BASS BROTHERS BUILDING - PHASE I, DALLAS, TEXAS -- CONFIGURATION A

WD	TAP	CPMEAN	CPRMS	CPMAX	CPMIN
0	313	-.451	.092	-.160	-1.064
0	314	-.601	.097	-.359	-1.219
0	315	-.625	.092	-.397	-1.129
0	316	-.667	.085	-.424	-1.018
0	317	-.471	.065	-.275	-.740
0	318	-.640	.077	-.276	-1.053
0	319	-.482	.068	-.291	-.824
0	320	-.487	.069	-.273	-.875
0	321	-.472	.065	-.299	-.779
0	322	-.486	.072	-.291	-.769
0	323	-.476	.071	-.261	-.833
0	324	-.496	.082	-.225	-1.045
0	325	-.507	.083	-.286	-.898
0	326	-.489	.064	-.301	-.835
0	327	-.601	.065	-.394	-.875
0	328	-.477	.064	-.297	-.754
0	329	-.494	.072	-.265	-.816
0	330	-.485	.070	-.272	-.790
0	331	-.522	.087	-.213	-.937
0	332	-.538	.084	-.299	-.969
0	333	-.507	.069	-.324	-.853
0	334	-.499	.066	-.317	-.758
0	335	-.503	.065	-.336	-.776
0	336	-.496	.067	-.318	-.772
0	337	-.484	.067	-.293	-.766
0	338	-.500	.078	-.204	-.962
0	339	-.497	.081	-.215	-1.008
0	340	-.581	.112	-.275	-1.222
0	341	-.592	.105	-.283	-1.210
0	342	-.556	.086	-.297	-.983
0	343	-.537	.082	-.303	-.872
0	344	-.571	.090	-.296	-.971
0	345	-.569	.090	-.331	-1.162
0	346	-.552	.085	-.311	-1.041
0	347	-.542	.084	-.282	-.875
0	348	-.541	.084	-.287	-.868
0	349	-.593	.124	-.099	-1.331
0	350	-.613	.122	-.276	-1.182
0	352	-.555	.090	-.277	-.922
0	353	-.592	.093	-.343	-1.051
0	354	-.587	.091	-.332	-1.082
0	355	-.578	.090	-.322	-1.051
0	359	-.524	.133	.106	-1.157
0	360	-.691	.118	-.124	-1.327
0	361	-.615	.100	-.321	-1.170
0	362	-.579	.095	-.245	-1.006
0	363	-.595	.095	-.287	-1.077
0	364	-.618	.093	-.336	-1.019
0	365	-.729	.103	-.447	-1.229
0	366	-.772	.106	-.508	-1.300

WD	TAP	CPMEAN	CPRMS	CPMAX	CPMIN
0	367	-.601	.100	-.356	-1.124
0	368	-.729	.090	-.426	-1.316
0	369	-.576	.089	-.294	-1.022
0	370	-.567	.078	-.306	-.885
0	371	-.606	.108	-.344	-1.248
0	372	-.576	.097	-.339	-1.121
0	373	-.700	.096	-.450	-1.224
0	374	-.594	.091	-.381	-1.021
0	375	-.555	.082	-.338	-.880
0	376	-.775	.183	-.195	-1.641
0	377	-.751	.174	-.112	-1.754
0	378	-.798	.123	-.397	-1.600
0	379	-.753	.099	-.438	-1.324
0	380	-.785	.113	-.464	-1.442
0	381	-.605	.099	-.331	-1.107
0	382	-.772	.110	-.525	-1.318
0	383	-.722	.121	-.239	-1.688
0	384	-.850	.143	-.446	-1.526
0	385	-.810	.121	-.507	-1.428
0	386	-.566	.171	-.054	-1.354
0	387	-.722	.116	-.457	-1.364
0	388	-.589	.119	-.264	-1.364
0	389	-.666	.172	-.198	-1.684
0	390	-.660	.098	-.415	-1.118
0	391	-.706	.102	-.454	-1.251
0	392	-.867	.133	-.533	-1.508
0	393	-1.063	.259	-.466	-2.029
0	401	-.489	.109	-.113	-.864
0	402	-.503	.093	-.193	-.829
0	403	-.590	.071	-.370	-.933
0	404	-.633	.072	-.336	-1.012
0	405	-.476	.076	-.232	-.966
0	406	-.631	.103	-.332	-1.165
0	407	-.517	.113	-.203	-1.340
0	408	-.615	.069	-.380	-.878
0	409	-.617	.068	-.400	-.884
0	410	-.668	.070	-.453	-.946
0	411	-.615	.061	-.435	-.916
0	412	-.687	.082	-.447	-1.153
0	413	-.728	.097	-.451	-1.204
0	414	-.500	.084	-.269	-1.003
0	415	-.721	.108	-.451	-1.419
0	416	-.493	.055	-.308	-.727
0	417	-.512	.059	-.309	-.759
0	418	-.520	.065	-.341	-.742
0	419	-.503	.071	-.322	-.816
0	420	-.515	.071	-.315	-.847
0	421	-.695	.084	-.441	-1.202
0	422	-.683	.088	-.438	-1.185
0	423	-.717	.100	-.421	-1.208

WD	TAP	CPMEAN	CPRMS	CPMAX	CPMIN
0	424	-.515	.061	-.336	-.715
0	425	-.514	.061	-.325	-.707
0	426	-.509	.060	-.324	-.705
0	427	-.508	.057	-.340	-.725
0	428	-.524	.060	-.348	-.966
0	429	-.675	.075	-.437	-.947
0	430	-.534	.068	-.338	-.811
0	431	-.550	.082	-.305	-1.042
0	432	-.559	.096	-.239	-1.063
0	433	-.573	.077	-.362	-.841
0	434	-.572	.077	-.348	-.863
0	435	-.572	.078	-.317	-.908
0	436	-.574	.079	-.326	-.947
0	437	-.589	.091	-.378	-1.284
0	438	-.594	.099	-.340	-1.195
0	439	-.730	.101	-.457	-1.319
0	440	-.602	.102	-.312	-1.105
0	441	-.612	.117	-.256	-1.181
0	442	-.775	.109	-.464	-1.379
0	443	-.600	.102	-.180	-1.096
0	444	-.608	.127	-.131	-1.428
0	445	-.609	.094	-.372	-1.004
0	446	-.604	.100	-.333	-1.045
0	447	-.604	.114	-.182	-1.128
0	449	-.669	.078	-.443	-1.043
0	450	-.572	.079	-.335	-.901
0	451	-.663	.080	-.415	-.984
0	452	-.738	.101	-.483	-1.451
0	453	-.770	.129	-.414	-1.375
0	454	-.579	.081	-.337	-.895
0	455	-.721	.084	-.525	-1.229
0	456	-.569	.079	-.328	-.926
0	457	-.586	.082	-.322	-.939
0	458	-.570	.079	-.353	-1.018
0	459	-.609	.103	-.210	-1.133
0	460	-.605	.120	-.273	-1.407
0	461	-.715	.105	-.367	-1.276
0	462	-.565	.084	-.325	-.954
0	463	-.557	.084	-.294	-.858
0	464	-.695	.079	-.490	-1.117
0	465	-.682	.085	-.413	-1.181
0	466	-.632	.124	-.351	-1.562
0	467	-.590	.124	-.313	-1.398
0	468	-.585	.102	-.331	-1.104
0	469	-.704	.100	-.346	-1.397
0	470	-.540	.123	-.117	-1.382
0	471	-.468	.167	.222	-1.377
0	472	-.779	.112	-.500	-1.451
0	473	-.774	.145	-.513	-2.600
0	474	-.797	.135	-.316	-1.451

APPENDIX A -- PRESSURE DATA: BASS BROTHERS BUILDING - PHASE I, DALLAS, TEXAS -- CONFIGURATION A

WD	TAP	CPMEAN	CPRMS	CPMAX	CPMIN
0	475	-.761	.127	-.388	-1.355
0	476	-.750	.119	-.424	-1.238
0	477	-.747	.135	-.384	-1.403
0	478	-.712	.115	-.307	-1.258
0	479	-.862	.142	-.483	-1.576
0	480	-.743	.127	-.408	-1.311
0	481	-.779	.114	-.344	-1.362
0	482	-.713	.101	-.155	-1.170
0	483	-.703	.101	-.440	-1 186
0	484	-.569	.142	-.061	-1.222
0	702	-.539	.076	-.346	-.912
0	703	-.581	.089	-.319	-1.022
0	704	-.733	.119	-.414	-1.424
0	801	-.548	.091	-.237	-.971
0	802	-.332	.128	.175	-.777
0	803	-.810	.166	-.362	-1.450
0	804	-.784	.181	-.300	-1.445
0	805	-1.217	.271	-.258	-2.126
0	806	-.424	.108	.001	-.758
0	807	-.152	.112	.219	-.642
0	808	-.472	.110	-.078	-1.066
0	809	-.556	.106	-.265	-1.206
0	810	-.359	.069	-.133	-.630
0	811	-.350	.113	.063	-.784
0	905	.002	.082	.334	-.355
0	906	-.931	.147	-.506	-1.578
0	907	.088	.082	.449	-.319
0	908	-.916	.231	-.426	-1.979
0	909	-.669	.077	-.462	-.982
0	910	-.795	.148	-.449	-1.524
0	911	-.747	.119	-.447	-1.250
0	912	-.605	.122	-.294	-1.186
0	913	-.703	.104	-.392	-1.256
0	915	-.707	.158	-.216	-1.521
10	101	.159	.139	.650	-.255
10	102	-.173	.084	.178	-.591
10	103	.192	.160	.676	-.759
10	104	.037	.133	.450	-.411
10	105	-.046	.153	.526	-.653
10	106	.182	.150	.777	-.301
10	107	.226	.142	.682	-.314
10	108	-.152	.211	.566	-.775
10	109	.001	.141	.521	-.534
10	110	.153	.257	.833	-.946
10	111	.030	.116	.461	-.481
10	112	.005	.105	.424	-.442
10	113	.112	.186	1.002	-.559
10	114	.311	.146	.759	-.455
10	115	.114	.105	.541	-.544
10	116	.143	.285	.871	-1.015

WD	TAP	CPMEAN	CPRMS	CPMAX	CPMIN
10	117	.104	.141	.564	-.836
10	118	.100	.140	.644	-.839
10	119	.077	.152	.683	-.603
10	120	.247	.130	.760	-.507
10	121	.103	.087	.456	-.318
10	122	-.129	.059	.142	-.445
10	123	-.254	.051	-.022	-.422
10	124	.021	.282	.683	-.935
10	125	.061	.129	.504	-.634
10	126	.051	.128	.566	-.652
10	127	.063	.134	.584	-.581
10	128	.162	.126	.630	-.529
10	129	-.015	.091	.344	-.375
10	130	-.133	.059	.134	-.458
10	131	-.288	.055	-.058	-.519
10	133	.003	.099	.427	-.665
10	134	-.012	.106	.480	-.549
10	135	-.008	.123	.688	-.547
10	136	.063	.102	.511	-.443
10	137	.014	.069	.285	-.282
10	139	-.454	.063	-.025	-.677
10	140	-.044	.142	.301	-.787
10	141	-.037	.101	.207	-.690
10	142	-.012	.100	.288	-.719
10	143	.029	.098	.445	-.442
10	144	.034	.084	.365	-.322
10	145	-.005	.071	.364	-.276
10	146	-.143	.068	.143	-.425
10	147	-.463	.066	-.042	-.677
10	148	.074	.102	.504	-.411
10	149	.062	.086	.443	-.240
10	150	-.043	.098	.282	-.706
10	151	-.079	.069	.220	-.336
10	152	.050	.067	.329	-.212
10	153	-.501	.098	-.282	-1.215
10	154	-.021	.074	.269	-.275
10	155	-.356	.068	-.147	-.639
10	156	.062	.097	.548	-.314
10	157	-.024	.078	.257	-.341
10	158	-.092	.076	.236	-.350
10	159	-.297	.097	.051	-.747
10	160	-.210	.095	.065	-.570
10	161	-.444	.075	-.190	-.858
10	162	.082	.099	.519	-.322
10	163	.038	.109	.507	-.330
10	164	-.778	.177	-.455	-2.177
10	165	-.736	.138	-.427	-1.611
10	166	-.026	.145	.469	-.679
10	167	-.006	.081	.325	-.332
10	168	-.147	.069	.166	-.407

WD	TAP	CPMEAN	CPRMS	CPMAX	CPMIN
10	169	-.306	.061	-.052	-.602
10	170	-.668	.097	-.259	-1.133
10	171	-.714	.118	-.055	-1.366
10	201	-.576	.100	-.106	-1.025
10	202	-.161	.143	.300	-.826
10	203	-.560	.104	-.215	-.965
10	204	-.268	.084	.061	-.576
10	205	-.168	.185	.400	-.797
10	206	.317	.147	.758	-.085
10	207	.322	.157	.792	-.143
10	208	-.480	.212	-.003	-1.327
10	209	.087	.116	.499	-.244
10	210	.202	.128	.659	-.183
10	211	.223	.128	.772	-.125
10	212	.191	.114	.621	-.136
10	213	.198	.115	.621	-.114
10	214	-.821	.249	-.131	-1.657
10	215	-.006	.107	.552	-.293
10	216	.280	.120	.722	-.013
10	217	.368	.138	.916	.011
10	218	.342	.126	.819	.032
10	219	.348	.127	.803	.036
10	220	.424	.147	.871	.049
10	221	.440	.158	.965	-.149
10	222	-.743	.254	-.031	-1.515
10	223	-.119	.107	.302	-.514
10	224	.224	.112	.681	-.066
10	225	.283	.133	.841	-.047
10	225	.283	.133	.841	-.047
10	226	.298	.110	.723	.035
10	227	.316	.112	.954	.038
10	228	.379	.131	1.016	.073
10	229	.380	.143	1.033	.002
10	230	-.611	.157	-.162	-1.317
10	232	.171	.103	.611	-.071
10	233	-.189	.100	.275	-.631
10	234	-.041	.094	.457	-.486
10	235	.081	.086	.440	-.186
10	236	.230	.091	.624	.036
10	237	.151	.097	.585	-.072
10	239	.254	.111	.660	-.029
10	240	.264	.106	.759	-.101
10	241	-.307	.098	.032	-.739
10	242	-.402	.119	.058	-.910
10	243	-.259	.085	.049	-.677
10	244	.067	.071	.378	-.124
10	245	.210	.083	.547	-.003
10	249	-.375	.094	.093	-.690
10	250	.064	.091	.489	-.266
10	252	-.449	.080	-.027	-.789

APPENDIX A -- PRESSURE DATA: BASS BROTHERS BUILDING - PHASE I, DALLAS, TEXAS -- CONFIGURATION A

WD	TAP	CPMEAN	CPRMS	CPMAX	CPMIN
10	253	-.477	.086	-.184	-.980
10	254	-.213	.073	.035	-.459
10	255	.120	.076	.552	-.048
10	256	.049	.095	.499	-.427
10	257	-.029	.089	.306	-.442
10	258	.079	.097	.516	-.301
10	259	-.154	.060	.046	-.491
10	260	.108	.071	.401	-.163
10	261	-.246	.117	.237	-.641
10	262	-.373	.078	-.079	-.689
10	263	-.549	.173	.028	-1.254
10	264	-.256	.085	.072	-.665
10	265	-.086	.052	.137	-.241
10	266	.086	.077	.479	-.119
10	267	.019	.070	.308	-.271
10	268	.024	.066	.333	-.232
10	269	.049	.075	.423	-.198
10	270	-.721	.086	-.435	-1.106
10	271	-.335	.094	.171	-.713
10	272	.045	.098	.583	-.196
10	273	.111	.096	.505	-.294
10	280	.005	.083	.401	-.264
10	301	-.708	.093	-.429	-1.178
10	302	-.546	.136	-.083	-1.427
10	303	-.516	.115	-.130	-1.006
10	304	-.505	.105	-.122	-.965
10	305	-.485	.118	-.033	-1.029
10	306	-.316	.131	.111	-.863
10	307	-.589	.141	-.198	-1.113
10	308	-.659	.089	-.393	-1.087
10	309	-.559	.083	-.354	-.939
10	310	-.560	.080	-.330	-.865
10	311	-.510	.071	-.332	-.825
10	312	-.628	.078	-.411	-.968
10	313	-.476	.099	-.184	-1.267
10	314	-.619	.097	-.354	-1.138
10	315	-.649	.093	-.420	-1.216
10	316	-.690	.094	-.439	-1.479
10	317	-.486	.067	-.217	-.742
10	318	-.677	.080	-.417	-1.083
10	319	-.517	.070	-.304	-.856
10	320	-.518	.070	-.301	-.899
10	321	-.502	.064	-.327	-.766
10	322	-.515	.069	-.326	-.804
10	323	-.502	.068	-.293	-1.003
10	324	-.528	.084	-.280	-.935
10	325	-.537	.078	-.299	-.951
10	326	-.519	.064	-.361	-.786
10	327	-.625	.070	-.388	-.974
10	328	-.499	.062	-.317	-.737
10	329	-.518	.066	-.325	-.791
10	330	-.503	.064	-.333	-.767
10	331	-.552	.091	-.249	-1.059
10	332	-.567	.087	-.309	-1.142
10	333	-.531	.068	-.347	-.985
10	334	-.549	.069	-.341	-.866
10	335	-.544	.069	-.348	-.810
10	336	-.540	.067	-.343	-.827
10	337	-.521	.065	-.333	-.797
10	338	-.536	.065	-.315	-.815
10	339	-.530	.066	-.273	-.827
10	340	-.598	.105	-.295	-1.277
10	341	-.595	.093	-.352	-1.090
10	342	-.572	.078	-.365	-1.059
10	343	-.554	.075	-.347	-.863
10	344	-.580	.076	-.370	-.968
10	345	-.572	.073	-.378	-.913
10	346	-.567	.071	-.368	-.892
10	347	-.555	.070	-.363	-.910
10	348	-.575	.072	-.361	-.863
10	349	-.625	.127	-.209	-1.425
10	350	-.634	.115	-.352	-1.435
10	352	-.602	.083	-.277	-.945
10	353	-.598	.077	-.383	-.932
10	354	-.596	.075	-.383	-1.021
10	355	-.585	.075	-.376	-.910
10	359	-.540	.109	.077	-1.041
10	360	-.691	.101	-.181	-1.165
10	361	-.607	.096	-.376	-1.220
10	362	-.562	.087	-.305	-1.065
10	363	-.584	.088	-.341	-1.091
10	364	-.609	.088	-.383	-1.112
10	365	-.734	.094	-.502	-1.334
10	366	-.789	.102	-.540	-1.410
10	367	-.620	.090	-.397	-1.126
10	368	-.758	.098	-.502	-1.300
10	369	-.602	.087	-.400	-1.089
10	370	-.599	.072	-.414	-.979
10	371	-.612	.096	-.388	-1.284
10	372	-.577	.086	-.363	-1.158
10	373	-.719	.093	-.494	-1.191
10	374	-.621	.092	-.404	-1.166
10	375	-.582	.076	-.363	-.965
10	376	-.733	.159	-.016	-1.525
10	377	-.736	.150	-.195	-1.596
10	378	-.783	.110	-.464	-1.445
10	379	-.740	.093	-.442	-1.257
10	380	-.784	.112	-.526	-1.331
10	381	-.612	.091	-.406	-1.216
10	382	-.765	.097	-.516	-1.257
10	383	-.685	.107	-.195	-1.268
10	384	-.851	.138	-.437	-1.585
10	385	-.807	.117	-.524	-1.422
10	386	-.580	.141	-.071	-1.524
10	387	-.726	.116	-.462	-1.327
10	388	-.596	.143	-.311	-1.905
10	389	-.682	.133	-.311	-1.475
10	390	-.704	.112	-.444	-1.202
10	391	-.751	.123	-.464	-1.343
10	392	-.888	.133	-.559	-1.597
10	393	-1.189	.246	-.541	-2.186
10	401	-.449	.088	-.108	-.790
10	402	-.466	.079	-.211	-.777
10	403	-.586	.072	-.369	-.863
10	404	-.617	.073	-.377	-.925
10	405	-.486	.081	-.260	-.948
10	406	-.606	.104	-.274	-1.259
10	407	-.540	.112	-.265	-1.341
10	408	-.613	.071	-.402	-.886
10	409	-.610	.069	-.405	-.871
10	410	-.657	.071	-.450	-.929
10	411	-.599	.062	-.438	-.869
10	412	-.664	.083	-.406	-1.121
10	413	-.700	.098	-.435	-1.369
10	414	-.499	.081	-.234	-.969
10	415	-.683	.099	-.390	-1.334
10	416	-.485	.052	-.299	-.665
10	417	-.500	.056	-.308	-.702
10	418	-.508	.060	-.332	-.748
10	419	-.489	.063	-.267	-.744
10	420	-.505	.069	-.283	-.838
10	421	-.685	.082	-.492	-1.111
10	422	-.674	.087	-.477	-1.087
10	423	-.694	.094	-.401	-1.369
10	424	-.503	.061	-.324	-.761
10	425	-.505	.061	-.327	-.751
10	426	-.496	.060	-.299	-.792
10	427	-.504	.057	-.338	-.704
10	428	-.514	.060	-.348	-.803
10	429	-.650	.071	-.452	-.948
10	430	-.515	.066	-.283	-.813
10	431	-.536	.076	-.267	-1.060
10	432	-.535	.085	-.273	-1.329
10	433	-.558	.069	-.397	-.829
10	434	-.552	.068	-.390	-.813
10	435	-.573	.071	-.395	-1.069
10	436	-.569	.071	-.392	-1.021
10	437	-.583	.075	-.401	-1.046
10	438	-.582	.080	-.388	-1.065
10	439	-.704	.089	-.471	-1.492

APPENDIX A -- PRESSURE DATA: BASS BROTHERS BUILDING - PHASE I, DALLAS, TEXAS -- CONFIGURATION A

WD	TAP	CPMEAN	CPRMS	CPMAX	CPMIN
10	440	-.592	.085	-.306	-1.051
10	441	-.585	.095	-.301	-1.298
10	442	-.753	.095	-.501	-1.405
10	443	-.579	.090	-.308	-1.099
10	444	-.586	.095	-.243	-1.264
10	445	-.590	.080	-.381	-1.105
10	446	-.578	.084	-.359	-1.034
10	447	-.564	.092	-.314	-1.062
10	449	-.658	.073	-.441	-.910
10	450	-.545	.069	-.372	-.880
10	451	-.662	.072	-.451	-.986
10	452	-.729	.086	-.507	-1.126
10	453	-.749	.107	-.295	-1.325
10	454	-.540	.071	-.350	-.885
10	455	-.711	.086	-.461	-1.123
10	456	-.551	.069	-.372	-.949
10	457	-.556	.069	-.386	-.892
10	458	-.552	.067	-.356	-.932
10	459	-.582	.080	-.320	-1.096
10	460	-.571	.098	-.259	-1.025
10	461	-.711	.105	-.431	-1.240
10	462	-.511	.072	-.317	-.839
10	463	-.512	.072	-.333	-.795
10	464	-.690	.082	-.451	-1.043
10	465	-.674	.076	-.490	-1.011
10	466	-.583	.104	-.346	-1.668
10	467	-.532	.100	-.312	-1.878
10	468	-.548	.085	-.311	-.964
10	469	-.687	.089	-.438	-1.055
10	470	-.555	.116	-.172	-1.149
10	471	-.508	.139	.018	-1.341
10	472	-.731	.100	-.472	-1.215
10	473	-.730	.116	-.442	-1.413
10	474	-.735	.106	-.460	-1.262
10	475	-.713	.093	-.474	-1.183
10	476	-.713	.102	-.420	-1.202
10	477	-.687	.104	-.300	-1.179
10	478	-.688	.105	-.217	-1.289
10	479	-.780	.105	-.517	-1.317
10	480	-.673	.096	-.398	-1.224
10	481	-.738	.100	-.457	-1.215
10	482	-.698	.097	-.366	-1.226
10	483	-.705	.091	-.486	-1.097
10	484	-.638	.133	-.243	-1.294
10	702	-.521	.066	-.335	-.837
10	703	-.563	.075	-.345	-.928
10	704	-.716	.106	-.466	-1.417
10	801	-.578	.100	-.322	-1.029
10	802	-.217	.114	.160	-.755
10	803	-.612	.139	-.209	-1.333

WD	TAP	CPMEAN	CPRMS	CPMAX	CPMIN
10	804	-.841	.208	-.222	-1.539
10	805	-1.208	.335	-.299	-2.347
10	806	-.308	.112	.015	-.668
10	807	-.268	.133	.246	-.675
10	808	-.488	.113	-.041	-.886
10	809	-.613	.108	-.296	-1.180
10	810	-.374	.082	-.098	-.703
10	811	-.370	.119	.104	-.799
10	905	-.100	.128	.262	-.868
10	906	-.915	.132	-.564	-1.634
10	907	-.006	.119	.413	-.507
10	908	-.767	.132	-.502	-1.746
10	909	-.670	.070	-.490	-.963
10	910	-.922	.187	-.543	-1.815
10	911	-.709	.092	-.462	-1.083
10	912	-.640	.134	-.250	-1.424
10	913	-.737	.118	-.426	-1.370
10	915	-.740	.122	-.172	-1.393
20	101	.154	.139	.726	-.552
20	102	-.240	.068	.013	-.722
20	103	.027	.190	.606	-.800
20	104	-.112	.132	.373	-.573
20	105	-.282	.201	.510	-1.096
20	106	.169	.181	.781	-.799
20	107	.271	.159	.842	-.384
20	108	-.444	.160	.177	-.828
20	109	-.220	.161	.323	-.681
20	110	-.337	.286	.551	-1.267
20	111	-.228	.226	.320	-1.356
20	112	-.269	.206	.098	-1.056
20	113	-.125	.231	1.012	-1.117
20	114	.184	.209	.798	-.665
20	115	.022	.107	.412	-.659
20	116	-.237	.244	.714	-1.320
20	117	-.184	.204	.381	-1.164
20	118	-.193	.213	.327	-1.057
20	119	-.188	.187	.453	-.984
20	120	.038	.238	.671	-.878
20	121	-.001	.147	.358	-.798
20	122	-.169	.076	.071	-.719
20	123	-.286	.062	-.049	-.650
20	124	-.294	.207	.666	-1.095
20	125	-.186	.166	.270	-.931
20	126	-.204	.178	.304	-1.126
20	127	-.190	.164	.461	-.798
20	128	-.037	.225	.575	-.758
20	129	-.155	.154	.225	-.877
20	130	-.183	.072	.149	-.589
20	131	-.310	.059	-.078	-.576
20	133	-.198	.165	.183	-1.180

WD	TAP	CPMEAN	CPRMS	CPMAX	CPMIN
20	134	-.223	.175	.177	-1.203
20	135	-.216	.160	.328	-1.081
20	136	-.091	.163	.414	-.953
20	137	-.072	.099	.218	-.558
20	139	-.471	.065	-.245	-.819
20	140	-.277	.199	.262	-1.183
20	141	-.239	.178	.219	-1.336
20	142	-.246	.191	.210	-1.604
20	143	-.167	.147	.243	-.947
20	144	-.077	.115	.319	-.583
20	145	-.090	.079	.196	-.426
20	146	-.212	.065	.051	-.545
20	147	-.488	.066	-.258	-.789
20	148	-.094	.136	.423	-.821
20	149	-.074	.097	.365	-.751
20	150	-.269	.178	.132	-1.497
20	151	-.191	.086	.086	-.771
20	152	-.019	.075	.299	-.362
20	153	-.471	.079	-.271	-.862
20	154	-.078	.085	.274	-.401
20	155	-.396	.073	-.164	-.865
20	156	-.089	.131	.436	-.651
20	157	-.173	.112	.172	-.605
20	158	-.213	.083	.081	-.583
20	159	-.268	.092	.038	-.670
20	160	-.189	.105	.256	-.621
20	161	-.473	.084	-.257	-.898
20	162	-.018	.146	.428	-1.260
20	163	-.075	.136	.489	-.852
20	164	-.628	.090	-.413	-1.291
20	165	-.607	.088	-.374	-1.187
20	166	-.316	.217	.286	-1.122
20	167	-.195	.130	.135	-.739
20	168	-.248	.069	-.009	-.535
20	169	-.363	.059	-.164	-.697
20	170	-.612	.089	-.271	-.996
20	171	-.668	.096	-.419	-1.094
20	201	-.545	.121	-.034	-1.086
20	202	-.205	.227	.450	-.958
20	203	-.546	.109	-.118	-1.046
20	204	-.206	.093	.183	-.542
20	205	-.089	.153	.393	-.660
20	206	.280	.159	.829	-.189
20	207	.294	.171	.876	-.163
20	208	-.303	.172	.148	-1.149
20	209	.145	.134	.731	-.237
20	210	.217	.143	.869	-.217
20	211	.237	.140	.840	-.147
20	212	.242	.128	.747	-.137
20	213	.290	.130	.791	-.050

APPENDIX A -- PRESSURE DATA: BASS BROTHERS BUILDING - PHASE I, DALLAS, TEXAS -- CONFIGURATION A

WD	TAP	CPMEAN	CPRMS	CPMAX	CPMIN
20	214	-.608	.246	.038	-1.524
20	215	.089	.133	.580	-.282
20	216	.318	.130	.811	-.020
20	217	.409	.138	.935	.015
20	218	.398	.131	.910	.049
20	219	.443	.142	.898	.073
20	220	.477	.154	.984	.049
20	221	.433	.157	1.029	-.001
20	222	-.539	.257	.190	-1.415
20	223	-.011	.137	.574	-.385
20	224	.261	.127	.837	-.066
20	225	.309	.137	.933	-.063
20	225	.309	.137	.933	-.063
20	226	.329	.126	.917	.026
20	227	.351	.123	.770	.022
20	228	.363	.134	.910	-.007
20	229	.298	.140	.969	-.120
20	230	-.476	.134	-.071	-1.232
20	232	.183	.118	.734	-.106
20	233	-.152	.112	.281	-.630
20	234	-.008	.109	.456	-.436
20	235	.093	.097	.507	-.209
20	236	.246	.099	.713	.020
20	237	.175	.112	.754	-.115
20	239	.217	.112	.749	-.131
20	240	.210	.117	.669	-.104
20	241	-.218	.110	.243	-.705
20	242	-.330	.128	.195	-.980
20	243	-.199	.110	.229	-.616
20	244	.092	.077	.503	-.146
20	245	.224	.087	.681	.025
20	249	-.270	.114	.255	-.789
20	250	.016	.111	.526	-.433
20	252	-.386	.075	-.083	-.742
20	253	-.432	.084	-.051	-.759
20	254	-.126	.072	.165	-.454
20	255	.152	.083	.489	-.062
20	256	.072	.105	.507	-.418
20	257	.040	.104	.438	-.484
20	258	.119	.099	.691	-.345
20	259	-.114	.058	.052	-.443
20	260	.104	.070	.386	-.261
20	261	-.214	.103	.242	-.577
20	262	-.317	.077	-.035	-.838
20	263	-.459	.183	.070	-1.243
20	264	-.294	.089	.003	-.642
20	265	-.061	.066	.188	-.252
20	266	.102	.077	.512	-.092
20	267	.039	.071	.360	-.277
20	268	.028	.064	.307	-.193
20	269	.051	.086	.588	-.398
20	270	-.692	.095	-.375	-1.153
20	271	-.228	.126	.399	-.654
20	272	.112	.111	.652	-.171
20	273	.141	.102	.864	-.219
20	280	.032	.103	.441	-.466
20	301	-.714	.098	-.441	-1.168
20	302	-.502	.111	-.167	-1.201
20	303	-.495	.100	-.128	-1.064
20	304	-.517	.104	-.142	-1.127
20	305	-.484	.116	-.086	-.986
20	306	-.227	.096	.085	-.892
20	307	-.394	.143	.064	-1.003
20	308	-.664	.094	-.387	-1.081
20	309	-.518	.086	-.281	-.923
20	310	-.545	.086	-.279	-.935
20	311	-.490	.069	-.267	-.806
20	312	-.621	.076	-.379	-.959
20	313	-.457	.093	-.127	-1.147
20	314	-.625	.096	-.299	-1.265
20	315	-.650	.089	-.394	-1.206
20	316	-.689	.087	-.437	-1.175
20	317	-.467	.061	-.223	-.719
20	318	-.653	.081	-.438	-1.131
20	319	-.501	.071	-.292	-.882
20	320	-.495	.070	-.290	-.882
20	321	-.484	.064	-.270	-.767
20	322	-.503	.070	-.269	-.764
20	323	-.496	.071	-.285	-.841
20	324	-.512	.096	-.196	-1.044
20	325	-.512	.087	-.241	-1.050
20	326	-.506	.066	-.299	-.825
20	327	-.608	.067	-.422	-.955
20	328	-.482	.062	-.300	-.739
20	329	-.502	.070	-.284	-.851
20	330	-.487	.067	-.278	-.922
20	331	-.540	.103	-.234	-1.258
20	332	-.550	.094	-.270	-1.325
20	333	-.515	.069	-.267	-.828
20	334	-.526	.071	-.276	-.807
20	335	-.516	.071	-.323	-.826
20	336	-.515	.069	-.309	-.956
20	337	-.497	.067	-.296	-.739
20	338	-.505	.066	-.294	-.727
20	339	-.494	.066	-.281	-.714
20	340	-.576	.106	-.347	-1.338
20	341	-.560	.087	-.365	-1.078
20	342	-.543	.070	-.358	-.819
20	343	-.526	.067	-.351	-.771
20	344	-.547	.074	-.354	-.889
20	345	-.536	.072	-.342	-.877
20	346	-.534	.070	-.351	-.846
20	347	-.521	.069	-.340	-.828
20	348	-.537	.068	-.345	-.809
20	349	-.595	.130	-.302	-1.689
20	350	-.595	.112	-.372	-1.509
20	352	-.546	.076	-.322	-1.094
20	353	-.536	.072	-.325	-.863
20	354	-.539	.071	-.331	-.869
20	355	-.525	.070	-.310	-.851
20	359	-.517	.092	-.138	-.902
20	360	-.670	.095	-.216	-1.128
20	361	-.571	.077	-.390	-.985
20	362	-.529	.074	-.319	-.878
20	363	-.548	.074	-.347	-.895
20	364	-.569	.072	-.361	-.902
20	365	-.726	.101	-.465	-1.445
20	366	-.789	.111	-.491	-1.807
20	367	-.578	.093	-.328	-1.058
20	368	-.729	.101	-.478	-1.406
20	369	-.560	.086	-.369	-.947
20	370	-.558	.071	-.377	-.860
20	371	-.561	.083	-.305	-.981
20	372	-.528	.079	-.309	-.904
20	373	-.690	.095	-.425	-1.346
20	374	-.571	.085	-.375	-.986
20	375	-.543	.071	-.367	-.885
20	376	-.678	.154	-.148	-1.547
20	377	-.696	.145	-.159	-1.553
20	378	-.747	.111	-.467	-1.381
20	379	-.704	.090	-.455	-1.214
20	380	-.713	.099	-.448	-1.524
20	381	-.570	.091	-.342	-1.061
20	382	-.732	.096	-.490	-1.150
20	383	-.632	.085	-.229	-1.204
20	384	-.804	.130	-.490	-1.721
20	385	-.764	.111	-.462	-1.291
20	386	-.585	.139	-.116	-1.684
20	387	-.711	.119	-.406	-1.500
20	388	-.631	.171	-.208	-1.596
20	389	-.647	.112	-.283	-1.170
20	390	-.701	.131	-.355	-1.247
20	391	-.768	.154	-.441	-1.434
20	392	-.844	.142	-.472	-1.461
20	393	-1.162	.246	-.502	-2.310
20	401	-.436	.072	-.210	-.751
20	402	-.458	.071	-.233	-.813
20	403	-.569	.077	-.322	-.948
20	404	-.585	.072	-.381	-.903
20	405	-.453	.081	-.143	-.938

APPENDIX A -- PRESSURE DATA: BASS BROTHERS BUILDING - PHASE I, DALLAS, TEXAS -- CONFIGURATION A

WD	TAP	CPMEAN	CPRMS	CPMAX	CPMIN
20	406	-.590	.100	-.326	-1.228
20	407	-.502	.094	-.204	-1.048
20	408	-.578	.074	-.335	-.849
20	409	-.572	.069	-.353	-.819
20	410	-.614	.070	-.392	-.854
20	411	-.562	.060	-.391	-.802
20	412	-.629	.080	-.420	-.984
20	413	-.655	.091	-.419	-1.108
20	414	-.460	.074	-.238	-.800
20	415	-.625	.085	-.335	-1.109
20	416	-.449	.054	-.285	-.711
20	417	-.459	.057	-.253	-.728
20	418	-.467	.060	-.270	-.774
20	419	-.455	.065	-.198	-.794
20	420	-.480	.064	-.237	-.759
20	421	-.650	.075	-.447	-1.026
20	422	-.642	.080	-.442	-1.015
20	423	-.654	.082	-.446	-1.137
20	424	-.471	.062	-.288	-.798
20	425	-.475	.060	-.261	-.716
20	426	-.462	.059	-.283	-.696
20	427	-.474	.054	-.310	-.661
20	428	-.479	.054	-.304	-.695
20	429	-.604	.066	-.401	-.854
20	430	-.477	.058	-.301	-.716
20	431	-.479	.064	-.162	-.841
20	432	-.476	.070	-.213	-.945
20	433	-.490	.061	-.288	-.788
20	434	-.478	.059	-.310	-.723
20	435	-.501	.061	-.338	-.752
20	436	-.493	.061	-.337	-.760
20	437	-.505	.063	-.354	-.826
20	438	-.497	.066	-.326	-.908
20	439	-.644	.077	-.446	-1.047
20	440	-.532	.072	-.326	-.866
20	441	-.531	.077	-.279	-.896
20	442	-.703	.082	-.476	-1.141
20	443	-.516	.075	-.283	-.872
20	444	-.532	.078	-.321	-.956
20	445	-.524	.067	-.343	-.800
20	446	-.513	.069	-.329	-.821
20	447	-.499	.074	-.300	-.943
20	449	-.625	.073	-.420	-.914
20	450	-.502	.066	-.342	-.750
20	451	-.603	.068	-.410	-1.065
20	452	-.683	.086	-.429	-1.220
20	453	-.692	.099	-.350	-1.160
20	454	-.496	.069	-.324	-.780
20	455	-.663	.073	-.454	-.978
20	456	-.493	.066	-.305	-.778
20	457	-.508	.067	-.319	-.772
20	458	-.493	.062	-.338	-.740
20	459	-.516	.074	-.317	-1.130
20	460	-.520	.089	-.296	-1.419
20	461	-.663	.086	-.388	-1.216
20	462	-.469	.070	-.289	-.784
20	463	-.467	.070	-.302	-.857
20	464	-.646	.068	-.449	-.969
20	465	-.616	.071	-.396	-.950
20	466	-.520	.079	-.296	-.891
20	467	-.476	.076	-.261	-.830
20	468	-.501	.075	-.288	-.834
20	469	-.618	.081	-.367	-1.078
20	470	-.509	.097	-.104	-1.013
20	471	-.463	.110	-.049	-1.189
20	472	-.664	.093	-.379	-1.349
20	473	-.683	.100	-.444	-1.557
20	474	-.653	.087	-.426	-1.195
20	475	-.629	.079	-.406	-.945
20	476	-.652	.091	-.384	-1.280
20	477	-.625	.083	-.137	-1.005
20	478	-.635	.086	-.260	-.991
20	479	-.680	.082	-.460	-1.050
20	480	-.587	.080	-.336	-.986
20	481	-.672	.088	-.443	-1.158
20	482	-.634	.088	-.410	-1.139
20	483	-.635	.094	-.351	-1.376
20	484	-.580	.112	-.224	-1.225
20	702	-.467	.064	-.305	-.752
20	703	-.507	.069	-.320	-.852
20	704	-.702	.105	-.452	-1.311
20	801	-.619	.118	-.252	-1.307
20	802	-.151	.132	.428	-.662
20	803	-.533	.122	-.221	-1.251
20	804	-.785	.185	-.214	-1.408
20	805	-.943	.385	-.266	-2.098
20	806	-.201	.099	.150	-.614
20	807	-.376	.118	.074	-.749
20	808	-.502	.105	-.130	-.985
20	809	-.588	.106	-.261	-1.099
20	810	-.407	.098	-.070	-.821
20	811	-.401	.118	.088	-.866
20	905	-.366	.203	.094	-1.540
20	906	-.857	.139	-.447	-1.560
20	907	-.186	.172	.305	-.867
20	908	-.649	.082	-.404	-.999
20	909	-.626	.065	-.459	-.899
20	910	-.970	.238	-.427	-1.897
20	911	-.649	.082	-.401	-1.034
20	912	-.616	.126	-.277	-1.115
20	913	-.677	.113	-.356	-1.128
20	915	-.702	.103	-.377	-1.403
30	101	.152	.138	.750	-.542
30	102	-.286	.072	-.021	-.735
30	103	-.329	.282	.293	-1.283
30	104	-.304	.119	.083	-.717
30	105	-.665	.242	.050	-1.684
30	106	.037	.244	.703	-.942
30	107	.251	.186	.814	-.589
30	108	-.539	.098	-.039	-.875
30	109	-.422	.096	.168	-.750
30	110	-.735	.269	.320	-2.246
30	111	-.648	.290	.183	-1.824
30	112	-.700	.274	-.055	-1.712
30	113	-.425	.286	.739	-1.254
30	114	-.017	.282	.711	-1.060
30	115	-.074	.135	.390	-.966
30	116	-.420	.155	.015	-1.562
30	117	-.429	.163	.132	-1.146
30	118	-.440	.174	.112	-1.314
30	119	-.519	.169	.145	-1.266
30	120	-.415	.263	.606	-1.348
30	121	-.293	.246	.407	-1.172
30	122	-.256	.153	.165	-.953
30	123	-.321	.113	.067	-.953
30	124	-.478	.150	.266	-1.484
30	125	-.422	.149	.110	-1.644
30	126	-.449	.157	.077	-1.489
30	127	-.436	.143	.180	-.975
30	128	-.409	.239	.495	-1.410
30	129	-.420	.229	.139	-1.453
30	130	-.315	.147	.099	-1.008
30	131	-.360	.106	-.073	-.950
30	133	-.485	.203	.011	-1.558
30	134	-.520	.217	-.016	-1.594
30	135	-.482	.193	.038	-1.353
30	136	-.313	.227	.324	-1.196
30	137	-.176	.149	.243	-.758
30	139	-.485	.073	-.231	-.921
30	140	-.627	.235	-.036	-1.802
30	141	-.582	.240	-.063	-2.135
30	142	-.559	.234	-.011	-2.013
30	143	-.420	.200	.317	-1.356
30	144	-.192	.162	.259	-.900
30	145	-.151	.098	.194	-.650
30	146	-.259	.062	.026	-.541
30	147	-.507	.067	-.247	-.877
30	148	-.355	.208	.238	-1.223
30	149	-.274	.142	.144	-.880
30	150	-.609	.233	-.052	-1.585

APPENDIX A -- PRESSURE DATA: BASS BROTHERS BUILDING - PHASE I, DALLAS, TEXAS -- CONFIGURATION A

WD	TAP	CPMEAN	CPRMS	CPMAX	CPMIN
30	151	-.322	.106	.120	-.827
30	152	-.075	.077	.264	-.452
30	153	-.442	.071	-.266	-.780
30	154	-.114	.086	.262	-.398
30	155	-.420	.081	-.208	-.844
30	156	-.304	.155	.217	-1.251
30	157	-.372	.131	-.008	-.950
30	158	-.340	.083	-.078	-.971
30	159	-.276	.090	.029	-.754
30	160	-.186	.095	.167	-.551
30	161	-.526	.097	-.272	-1.079
30	162	-.316	.223	.369	-1.275
30	163	-.333	.164	.363	-1.059
30	164	-.585	.085	-.375	-1.090
30	165	-.572	.085	-.368	-.971
30	166	-.625	.185	.094	-1.391
30	167	-.463	.177	-.044	-1.075
30	168	-.331	.057	-.101	-.559
30	169	-.401	.055	-.212	-.629
30	170	-.535	.082	-.259	-.901
30	171	-.601	.089	-.350	-.988
30	201	-.478	.109	-.034	-.973
30	202	-.391	.191	.567	-1.003
30	203	-.500	.113	.009	-.907
30	204	-.140	.085	.308	-.440
30	205	.030	.126	.442	-.416
30	206	.183	.149	.708	-.274
30	207	.186	.159	.836	-.264
30	208	-.180	.164	.332	-1.062
30	209	.225	.143	.817	-.232
30	210	.274	.143	.859	-.191
30	211	.297	.138	.782	-.138
30	212	.317	.141	.816	-.132
30	213	.385	.144	.846	-.072
30	214	-.401	.217	.141	-1.313
30	215	.203	.141	.800	-.209
30	216	.391	.141	.973	.004
30	217	.471	.155	1.050	-.022
30	218	.465	.151	1.056	.044
30	219	.457	.150	1.020	.082
30	220	.435	.158	1.066	-.000
30	221	.343	.157	.908	-.120
30	222	-.344	.230	.251	-1.117
30	223	.079	.140	.630	-.358
30	224	.306	.128	.876	-.000
30	225	.315	.131	.847	-.035
30	225	.315	.131	.847	-.035
30	226	.366	.127	.832	.079
30	227	.394	.143	1.112	.037
30	228	.353	.151	1.081	-.059
30	229	.239	.149	.849	-.166
30	230	-.389	.122	.081	-.890
30	232	.189	.124	.820	-.110
30	233	-.099	.123	.403	-.662
30	234	.006	.113	.537	-.415
30	235	.117	.104	.656	-.311
30	236	.266	.107	.853	.006
30	237	.198	.121	.825	-.068
30	239	.192	.122	.807	-.151
30	240	.109	.121	.620	-.394
30	241	-.129	.111	.413	-.578
30	242	-.229	.129	.299	-1.010
30	243	-.150	.111	.439	-.660
30	244	.136	.091	.558	-.120
30	245	.243	.098	.595	.008
30	249	-.203	.117	.367	-.738
30	250	-.077	.127	.448	-.725
30	252	-.312	.074	.121	-.662
30	253	-.369	.080	-.066	-.747
30	254	-.064	.074	.294	-.300
30	255	.171	.084	.524	-.061
30	256	.063	.103	.454	-.562
30	257	.047	.100	.382	-.434
30	258	.104	.117	.628	-.368
30	259	-.096	.052	.093	-.327
30	260	.087	.079	.418	-.281
30	261	-.202	.086	.185	-.689
30	262	-.267	.077	.030	-.581
30	263	-.357	.171	.147	-1.074
30	264	-.264	.093	.080	-.660
30	265	-.014	.076	.324	-.262
30	266	.102	.085	.467	-.119
30	267	.036	.080	.387	-.185
30	268	.011	.072	.339	-.420
30	269	-.014	.103	.454	-.408
30	270	-.649	.104	-.283	-1.048
30	271	-.110	.142	.487	-.684
30	272	.177	.130	.773	-.216
30	273	.109	.119	.605	-.296
30	280	.077	.111	.548	-.498
30	301	-.656	.110	-.331	-1.363
30	302	-.463	.119	-.067	-1.198
30	303	-.462	.108	-.080	-.934
30	304	-.494	.110	-.107	-1.563
30	305	-.459	.108	-.055	-1.054
30	306	-.208	.084	.161	-.558
30	307	-.223	.126	.335	-.749
30	308	-.639	.101	-.280	-1.170
30	309	-.463	.078	-.220	-.888
30	310	-.470	.079	-.203	-.852
30	311	-.468	.074	-.248	-.810
30	312	-.603	.083	-.326	-1.188
30	313	-.458	.110	-.162	-1.085
30	314	-.617	.109	-.300	-1.233
30	315	-.642	.096	-.385	-1.102
30	316	-.669	.087	-.419	-1.057
30	317	-.449	.069	-.188	-.807
30	318	-.613	.086	-.358	-1.017
30	319	-.470	.074	-.268	-.971
30	320	-.470	.074	-.269	-.959
30	321	-.451	.070	-.246	-.811
30	322	-.469	.073	-.247	-.779
30	323	-.459	.073	-.232	-.916
30	324	-.498	.113	-.246	-1.325
30	325	-.496	.099	-.235	-1.258
30	326	-.470	.069	-.263	-.800
30	327	-.569	.071	-.331	-.892
30	328	-.449	.066	-.232	-.732
30	329	-.462	.073	-.239	-.781
30	330	-.457	.071	-.233	-.762
30	331	-.513	.126	-.195	-1.379
30	332	-.507	.109	-.232	-1.189
30	333	-.478	.078	-.247	-.933
30	334	-.491	.075	-.273	-.867
30	335	-.487	.074	-.254	-.869
30	336	-.477	.073	-.276	-.839
30	337	-.468	.068	-.273	-.769
30	338	-.468	.069	-.263	-.744
30	339	-.466	.069	-.249	-.742
30	340	-.552	.140	-.263	-1.515
30	341	-.550	.119	-.149	-1.506
30	342	-.517	.086	-.230	-1.031
30	343	-.504	.080	-.178	-.924
30	344	-.506	.074	-.258	-.812
30	345	-.500	.072	-.252	-.981
30	346	-.490	.069	-.251	-1.028
30	347	-.481	.068	-.264	-1.098
30	348	-.483	.067	-.273	-.808
30	349	-.556	.136	-.176	-1.623
30	350	-.548	.112	-.225	-1.224
30	352	-.502	.077	-.303	-.836
30	353	-.499	.077	-.293	-.893
30	354	-.494	.075	-.295	-.862
30	355	-.486	.074	-.283	-.852
30	359	-.471	.089	-.086	-1.017
30	360	-.599	.089	-.221	-1.127
30	361	-.500	.081	-.270	-1.009
30	362	-.469	.082	-.240	-1.188
30	363	-.484	.084	-.240	-1.164
30	364	-.496	.084	-.261	-1.058

APPENDIX A -- PRESSURE DATA: BASS BROTHERS BUILDING - PHASE I, DALLAS, TEXAS -- CONFIGURATION A

WD	TAP	CPMEAN	CPRMS	CPMAX	CPMIN
30	365	-.682	.105	-.410	-1.279
30	366	-.739	.137	-.343	-1.777
30	367	-.520	.105	-.211	-1.205
30	368	-.687	.094	-.474	-1.214
30	369	-.489	.084	-.274	-.909
30	370	-.478	.068	-.268	-.766
30	371	-.495	.087	-.195	-.943
30	372	-.467	.081	-.224	-.836
30	373	-.644	.093	-.411	-1.480
30	374	-.519	.092	-.324	-1.311
30	375	-.488	.077	-.284	-.971
30	376	-.643	.141	-.168	-1.463
30	377	-.628	.129	-.181	-1.429
30	378	-.710	.100	-.489	-1.256
30	379	-.640	.084	-.409	-.993
30	380	-.630	.095	-.413	-1.097
30	381	-.518	.089	-.296	-1.006
30	382	-.689	.100	-.455	-1.331
30	383	-.567	.081	-.338	-1.124
30	384	-.726	.137	-.411	-1.470
30	385	-.664	.099	-.429	-1.146
30	386	-.534	.122	-.061	-1.189
30	387	-.642	.111	-.361	-1.247
30	388	-.627	.165	-.256	-1.720
30	389	-.607	.102	-.368	-1.040
30	390	-.702	.124	-.353	-1.225
30	391	-.799	.146	-.429	-1.380
30	392	-.782	.128	-.455	-1.326
30	393	-1.043	.244	-.279	-2.330
30	401	-.426	.073	-.136	-.736
30	402	-.436	.073	-.155	-.743
30	403	-.531	.077	-.255	-.792
30	404	-.536	.074	-.301	-.826
30	405	-.398	.076	-.179	-.794
30	406	-.538	.091	-.247	-1.062
30	407	-.453	.089	-.202	-.885
30	408	-.524	.071	-.289	-.815
30	409	-.519	.066	-.308	-.764
30	410	-.553	.066	-.348	-.832
30	411	-.510	.058	-.310	-.709
30	412	-.586	.076	-.357	-.937
30	413	-.614	.080	-.364	-1.050
30	414	-.422	.073	-.186	-.882
30	415	-.569	.075	-.338	-.944
30	416	-.409	.055	-.235	-.613
30	417	-.419	.057	-.247	-.642
30	418	-.422	.058	-.251	-.662
30	419	-.428	.062	-.211	-.688
30	420	-.441	.066	-.202	-.810
30	421	-.595	.075	-.359	-1.005

WD	TAP	CPMEAN	CPRMS	CPMAX	CPMIN
30	422	-.572	.080	-.341	-1.028
30	423	-.592	.077	-.303	-.984
30	424	-.434	.071	-.227	-1.010
30	425	-.431	.063	-.244	-.706
30	426	-.423	.059	-.233	-.667
30	427	-.421	.058	-.237	-.642
30	428	-.428	.057	-.273	-.642
30	429	-.546	.060	-.361	-.803
30	430	-.427	.058	-.240	-.669
30	431	-.450	.065	-.239	-.718
30	432	-.452	.071	-.220	-.725
30	433	-.481	.078	-.262	-1.252
30	434	-.471	.067	-.269	-.898
30	435	-.469	.065	-.256	-.765
30	436	-.463	.065	-.281	-.835
30	437	-.472	.067	-.297	-.946
30	438	-.472	.067	-.276	-.848
30	439	-.584	.066	-.357	-.852
30	440	-.474	.070	-.235	-.755
30	441	-.475	.077	-.205	-.820
30	442	-.658	.082	-.470	-1.021
30	443	-.469	.071	-.254	-.807
30	444	-.481	.081	-.134	-.955
30	445	-.476	.069	-.298	-.853
30	446	-.473	.071	-.267	-.891
30	447	-.460	.076	-.254	-.932
30	449	-.573	.076	-.375	-1.035
30	450	-.454	.067	-.282	-.784
30	451	-.560	.068	-.384	-.823
30	452	-.628	.092	-.334	-1.210
30	453	-.630	.089	-.323	-1.031
30	454	-.450	.072	-.260	-.786
30	455	-.630	.078	-.418	-1.038
30	456	-.450	.073	-.254	-.852
30	457	-.454	.068	-.280	-.793
30	458	-.446	.068	-.274	-.824
30	459	-.462	.076	-.259	-.888
30	460	-.483	.082	-.259	-.932
30	461	-.606	.093	-.221	-1.023
30	462	-.428	.071	-.233	-.764
30	463	-.434	.070	-.252	-.813
30	464	-.608	.072	-.403	-.991
30	465	-.568	.067	-.375	-.808
30	466	-.462	.073	-.261	-.830
30	467	-.431	.071	-.238	-.769
30	468	-.453	.073	-.267	-.795
30	469	-.573	.079	-.371	-.892
30	470	-.459	.083	-.231	-.807
30	471	-.395	.095	-.084	-.824
30	472	-.616	.082	-.377	-.954

WD	TAP	CPMEAN	CPRMS	CPMAX	CPMIN
30	473	-.642	.086	-.419	-1.098
30	474	-.616	.082	-.382	-1.051
30	475	-.574	.076	-.387	-.919
30	476	-.637	.102	-.408	-1.397
30	477	-.586	.088	-.257	-1.226
30	478	-.603	.087	-.168	-1.189
30	479	-.614	.079	-.414	-.998
30	480	-.544	.078	-.322	-.875
30	481	-.617	.089	-.399	-1.180
30	482	-.577	.090	-.352	-1.134
30	483	-.582	.090	-.354	-1.153
30	484	-.528	.100	-.123	-.981
30	702	-.430	.063	-.249	-.679
30	703	-.463	.071	-.289	-.797
30	704	-.662	.110	-.411	-1.585
30	801	-.605	.132	.138	-1.089
30	802	-.088	.174	.423	-1.029
30	803	-.735	.208	-.199	-1.500
30	804	-.686	.179	-.168	-1.361
30	805	-.609	.241	-.109	-2.035
30	806	-.232	.133	.258	-.723
30	807	-.465	.108	.089	-.982
30	808	-.476	.113	-.008	-1.003
30	809	-.540	.112	-.191	-1.068
30	810	-.500	.107	-.061	-1.128
30	811	-.430	.121	.212	-.956
30	905	-.756	.252	-.060	-2.007
30	906	-.822	.148	-.425	-1.456
30	907	-.484	.179	.071	-1.139
30	908	-.598	.084	-.372	-.995
30	909	-.575	.070	-.395	-.842
30	910	-.973	.230	-.448	-2.231
30	911	-.618	.088	-.422	-1.007
30	912	-.553	.121	-.262	-1.196
30	913	-.583	.114	-.281	-1.240
30	915	-.673	.105	-.376	-1.302
40	101	.141	.158	.871	-.509
40	102	-.315	.072	-.002	-.618
40	103	-.648	.219	.136	-1.422
40	104	-.402	.130	.013	-1.180
40	105	-.850	.204	-.320	-1.710
40	106	-.343	.271	.603	-1.616
40	107	.076	.247	.786	-1.180
40	108	-.483	.088	-.187	-.880
40	109	-.417	.082	-.011	-.934
40	110	-.921	.222	-.359	-1.914
40	111	-.897	.233	-.208	-1.936
40	112	-.937	.200	-.383	-1.604
40	113	-.757	.196	.210	-1.522
40	114	-.405	.285	.658	-1.170

APPENDIX A -- PRESSURE DATA: BASS BROTHERS BUILDING - PHASE I, DALLAS, TEXAS -- CONFIGURATION A

WD	TAP	CPMEAN	CPRMS	CPMAX	CPMIN
40	115	-.216	.185	.330	-1.168
40	116	-.539	.113	-.167	-.953
40	117	-.569	.117	-.190	-1.049
40	118	-.569	.117	-.147	-.986
40	119	-.613	.133	-.047	-1.238
40	120	-.598	.171	.309	-1.179
40	121	-.535	.196	.221	-1.320
40	122	-.407	.187	.140	-1.132
40	123	-.433	.175	.130	-1.381
40	124	-.563	.113	-.218	-1.269
40	125	-.522	.113	-.167	-1.579
40	126	-.542	.115	-.161	-1.294
40	127	-.534	.109	-.197	-1.170
40	128	-.613	.150	.074	-1.553
40	129	-.697	.204	.119	-1.511
40	130	-.467	.163	.138	-1.150
40	131	-.457	.161	.033	-1.362
40	133	-.679	.194	-.108	-2.413
40	134	-.710	.202	-.190	-2.301
40	135	-.690	.182	.031	-1.600
40	136	-.552	.231	.287	-1.413
40	137	-.340	.201	.222	-.970
40	139	-.513	.095	-.190	-1.023
40	140	-.795	.232	-.301	-1.979
40	141	-.785	.240	-.236	-2.230
40	142	-.756	.231	-.144	-2.155
40	143	-.643	.200	.046	-1.646
40	144	-.393	.210	.291	-1.233
40	145	-.262	.141	.233	-.847
40	146	-.312	.087	.010	-.827
40	147	-.564	.083	-.218	-1.095
40	148	-.636	.229	-.059	-1.723
40	149	-.450	.163	.021	-1.331
40	150	-.846	.242	-.293	-2.372
40	151	-.523	.162	-.112	-1.365
40	152	-.139	.093	.157	-.514
40	153	-.432	.075	-.238	-.776
40	154	-.150	.097	.436	-.515
40	155	-.471	.081	-.229	-.910
40	156	-.642	.164	-.070	-1.742
40	157	-.693	.138	-.231	-1.400
40	158	-.560	.106	-.262	-1.113
40	159	-.402	.092	-.121	-.833
40	160	-.192	.104	.273	-.574
40	161	-.703	.099	-.421	-1.123
40	162	-.817	.271	.017	-1.845
40	163	-.642	.158	-.118	-1.334
40	164	-.685	.095	-.458	-1.186
40	165	-.687	.095	-.462	-1.123
40	166	-.966	.190	-.464	-1.770
40	167	-.698	.184	-.209	-1.305
40	168	-.527	.070	-.270	-.812
40	169	-.580	.068	-.335	-.842
40	170	-.595	.081	-.350	-.959
40	171	-.632	.085	-.370	-.973
40	201	-.460	.121	.004	-1.018
40	202	-.488	.173	.428	-1.038
40	203	-.466	.115	.019	-.911
40	204	-.120	.098	.236	-.489
40	205	.070	.128	.617	-.511
40	206	.088	.145	.688	-.465
40	207	.074	.150	.754	-.490
40	208	-.046	.132	.401	-.846
40	209	.290	.149	.845	-.181
40	210	.313	.151	.964	-.187
40	211	.323	.146	.920	-.154
40	212	.341	.148	.799	-.153
40	213	.411	.151	.867	-.099
40	214	-.317	.172	.154	-1.427
40	215	.264	.149	.950	-.169
40	216	.405	.144	.980	-.001
40	217	.470	.155	1.086	.047
40	218	.469	.155	1.032	.058
40	219	.464	.158	1.043	.018
40	220	.374	.151	.931	-.067
40	221	.230	.139	.717	-.242
40	222	-.181	.183	.389	-.993
40	223	.152	.152	.730	-.303
40	224	.334	.135	.807	-.079
40	225	.279	.176	.992	-.099
40	225	.279	.176	.992	-.099
40	226	.384	.136	.817	-.045
40	227	.375	.140	.921	.025
40	228	.274	.135	.785	-.081
40	229	.121	.128	.582	-.261
40	230	-.308	.117	.219	-.850
40	232	.122	.129	.659	-.236
40	233	-.120	.136	.336	-.815
40	234	.034	.115	.469	-.466
40	235	.132	.107	.592	-.217
40	236	.269	.104	.710	-.012
40	237	.156	.125	.673	-.187
40	239	.137	.112	.670	-.262
40	240	.011	.121	.599	-.479
40	241	-.079	.122	.427	-.575
40	242	-.159	.128	.374	-.761
40	243	-.080	.117	.649	-.546
40	244	.159	.103	.713	-.155
40	245	.244	.112	.794	.011
40	249	-.134	.126	.581	-.546
40	250	-.256	.134	.275	-.913
40	252	-.274	.072	-.020	-.617
40	253	-.318	.077	-.029	-.674
40	254	-.015	.075	.273	-.265
40	255	.197	.094	.547	-.038
40	256	.090	.095	.479	-.333
40	257	.063	.100	.459	-.544
40	258	.005	.110	.526	-.508
40	259	-.097	.052	.080	-.338
40	260	.066	.077	.331	-.296
40	261	-.229	.082	.101	-.625
40	262	-.205	.071	.041	-.497
40	263	-.229	.144	.230	-1.034
40	264	-.326	.092	-.011	-.859
40	265	-.044	.085	.268	-.245
40	266	-.007	.084	.352	-.244
40	267	-.049	.079	.293	-.383
40	268	-.127	.088	.225	-.571
40	269	-.132	.100	.280	-.576
40	270	-.566	.103	-.264	-.975
40	271	.019	.149	.685	-.381
40	272	.202	.139	.737	-.145
40	273	-.100	.138	.500	-.572
40	280	.091	.108	.464	-.639
40	301	-.623	.133	-.209	-1.556
40	302	-.434	.155	.058	-1.398
40	303	-.428	.147	.157	-1.283
40	304	-.461	.145	.280	-1.207
40	305	-.439	.136	.144	-1.067
40	306	-.144	.099	.193	-.496
40	307	-.081	.136	.343	-.749
40	308	-.618	.111	-.264	-1.249
40	309	-.435	.095	-.099	-.828
40	310	-.452	.091	-.175	-.941
40	311	-.428	.087	-.148	-.870
40	312	-.580	.095	-.263	-1.117
40	313	-.437	.145	-.065	-1.507
40	314	-.585	.143	-.151	-1.407
40	315	-.620	.125	-.185	-1.381
40	316	-.665	.113	-.281	-1.372
40	317	-.403	.081	-.088	-.769
40	318	-.650	.119	-.289	-1.402
40	319	-.441	.085	-.158	-.925
40	320	-.429	.085	-.159	-.903
40	321	-.404	.077	-.156	-.725
40	322	-.417	.076	-.176	-.745
40	323	-.447	.081	-.189	-.877
40	324	-.450	.132	.045	-1.262
40	325	-.444	.113	-.173	-1.102
40	326	-.462	.088	-.203	-1.113

APPENDIX A -- PRESSURE DATA: BASS BROTHERS BUILDING - PHASE I, DALLAS, TEXAS -- CONFIGURATION A

WD	TAP	CPMEAN	CPRMS	CPMAX	CPMIN
40	327	-.661	.091	-.390	-1.210
40	328	-.421	.077	-.135	-.928
40	329	-.430	.086	-.149	-.952
40	330	-.424	.084	-.111	-.988
40	331	-.494	.148	-.201	-1.282
40	332	-.475	.124	-.177	-1.278
40	333	-.445	.086	-.185	-.826
40	334	-.441	.079	-.206	-.789
40	335	-.419	.077	-.157	-.777
40	336	-.402	.074	-.203	-.751
40	337	-.391	.070	-.202	-.681
40	338	-.417	.068	-.225	-.680
40	339	-.399	.067	-.218	-.655
40	340	-.513	.158	-.172	-1.790
40	341	-.490	.131	-.191	-1.301
40	342	-.451	.089	-.200	-.900
40	343	-.441	.082	-.200	-.790
40	344	-.473	.084	-.222	-1.037
40	345	-.448	.078	-.211	-.950
40	346	-.432	.072	-.212	-.851
40	347	-.426	.071	-.200	-.824
40	348	-.451	.076	-.260	-.780
40	349	-.521	.160	.065	-1.421
40	350	-.496	.125	.012	-1.318
40	352	-.483	.083	-.199	-.847
40	353	-.462	.085	-.218	-1.074
40	354	-.451	.084	-.212	-1.029
40	355	-.447	.083	-.202	-.957
40	359	-.432	.087	-.159	-.976
40	360	-.536	.089	-.205	-.993
40	361	-.475	.089	-.251	-.980
40	362	-.457	.094	-.182	-1.118
40	363	-.475	.098	-.190	-1.109
40	364	-.494	.101	-.213	-1.038
40	365	-.657	.129	-.347	-1.453
40	366	-.723	.174	-.303	-1.860
40	367	-.515	.121	-.238	-1.335
40	368	-.637	.113	-.399	-1.412
40	369	-.455	.086	-.231	-.944
40	370	-.446	.072	-.255	-.761
40	371	-.458	.083	-.263	-1.028
40	372	-.439	.081	-.238	-.847
40	373	-.586	.110	-.348	-1.569
40	374	-.478	.082	-.294	-1.017
40	375	-.446	.075	-.233	-.778
40	376	-.605	.153	-.225	-1.584
40	377	-.738	.126	-.321	-1.483
40	378	-.671	.112	-.411	-1.345
40	379	-.669	.091	-.433	-1.157
40	380	-.715	.107	-.482	-1.482
40	381	-.472	.091	-.231	-1.026
40	382	-.648	.102	-.380	-1.164
40	383	-.659	.094	-.369	-1.063
40	384	-.747	.155	-.412	-1.905
40	385	-.759	.120	-.440	-1.471
40	386	-.697	.158	-.137	-1.834
40	387	-.737	.130	-.358	-1.438
40	388	-.745	.165	-.365	-1.758
40	389	-.699	.108	-.414	-1.409
40	390	-.779	.123	-.437	-1.261
40	391	-.900	.144	-.472	-1.570
40	392	-.742	.116	-.404	-1.281
40	393	-.918	.204	-.309	-1.759
40	401	-.373	.070	-.147	-.714
40	402	-.380	.070	-.178	-.773
40	403	-.619	.086	-.340	-.999
40	404	-.590	.085	-.332	-1.032
40	405	-.353	.075	-.091	-.788
40	406	-.493	.104	-.136	-1.046
40	407	-.421	.108	-.093	-1.015
40	408	-.613	.084	-.364	-.950
40	409	-.601	.079	-.327	-.902
40	410	-.581	.079	-.289	-.878
40	411	-.579	.068	-.390	-.846
40	412	-.547	.082	-.319	-.868
40	413	-.590	.089	-.313	-1.029
40	414	-.365	.075	-.062	-.787
40	415	-.589	.095	-.310	-1.165
40	416	-.381	.059	-.196	-.642
40	417	-.379	.059	-.191	-.647
40	418	-.366	.059	-.177	-.653
40	419	-.383	.071	-.126	-.747
40	420	-.416	.071	-.168	-.825
40	421	-.557	.074	-.375	-.927
40	422	-.516	.075	-.310	-.891
40	423	-.543	.077	-.312	-1.100
40	424	-.437	.112	-.125	-.984
40	425	-.400	.083	-.170	-.732
40	426	-.381	.070	-.164	-.659
40	427	-.406	.061	-.184	-.651
40	428	-.405	.060	-.203	-.637
40	429	-.613	.064	-.422	-.890
40	430	-.381	.057	-.185	-.643
40	431	-.403	.059	-.191	-.637
40	432	-.395	.067	-.142	-.718
40	433	-.469	.110	-.175	-1.075
40	434	-.435	.078	-.200	-.805
40	435	-.449	.065	-.270	-.727
40	436	-.420	.057	-.257	-.642
40	437	-.422	.058	-.268	-.644
40	438	-.407	.059	-.223	-.607
40	439	-.628	.070	-.374	-.892
40	440	-.416	.068	-.170	-.665
40	441	-.404	.073	-.118	-.677
40	442	-.627	.085	-.328	-1.142
40	443	-.404	.070	-.035	-.700
40	444	-.410	.072	-.142	-.717
40	445	-.448	.066	-.278	-.731
40	446	-.446	.071	-.276	-.748
40	447	-.418	.078	-.089	-.828
40	449	-.556	.080	-.343	-.922
40	450	-.440	.067	-.263	-.739
40	451	-.665	.076	-.462	-.978
40	452	-.604	.099	-.319	-1.215
40	453	-.603	.092	-.196	-1.154
40	454	-.441	.078	-.249	-1.008
40	455	-.613	.077	-.404	-1.003
40	456	-.435	.073	-.242	-.753
40	457	-.443	.068	-.257	-.719
40	458	-.428	.066	-.253	-.680
40	459	-.451	.074	-.255	-.770
40	460	-.467	.086	-.261	-.870
40	461	-.557	.093	-.231	-1.127
40	462	-.422	.071	-.208	-.747
40	463	-.426	.070	-.240	-.705
40	464	-.573	.063	-.393	-.829
40	465	-.657	.068	-.399	-.942
40	466	-.438	.074	-.234	-.794
40	467	-.411	.073	-.210	-.742
40	468	-.430	.074	-.231	-.748
40	469	-.674	.078	-.470	-1.003
40	470	-.459	.081	-.169	-.829
40	471	-.369	.098	.001	-.905
40	472	-.660	.078	-.470	-.949
40	473	-.635	.080	-.436	-.973
40	474	-.654	.087	-.447	-1.036
40	475	-.690	.103	-.438	-1.223
40	476	-.645	.105	-.392	-1.200
40	477	-.560	.091	-.201	-.943
40	478	-.575	.096	-.209	-.988
40	479	-.667	.098	-.431	-1.107
40	480	-.679	.086	-.445	-1.021
40	481	-.674	.100	-.441	-1.234
40	482	-.691	.100	-.466	-1.254
40	483	-.681	.093	-.450	-1.115
40	484	-.598	.117	-.189	-1.048
40	702	-.420	.063	-.259	-.707
40	703	-.450	.070	-.258	-.831
40	704	-.648	.107	-.368	-1.300
40	801	-.482	.185	.365	-1.069

APPENDIX A -- PRESSURE DATA: BASS BROTHERS BUILDING - PHASE I, DALLAS, TEXAS -- CONFIGURATION A

WD	TAP	CPMEAN	CPRMS	CPMAX	CPMIN
40	802	-.197	.201	.367	-1.242
40	803	-.660	.182	-.178	-1.438
40	804	-.579	.143	-.054	-1.316
40	805	-.526	.141	-.198	-1.543
40	806	-.408	.121	.035	-.890
40	807	-.546	.122	-.112	-1.186
40	808	-.415	.110	.159	-.929
40	809	-.483	.107	-.111	-.890
40	810	-.575	.141	-.134	-1.427
40	811	-.392	.137	.207	-1.188
40	905	-1.028	.279	-.313	-2.325
40	906	-.809	.149	-.397	-1.459
40	907	-.887	.197	-.143	-1.758
40	908	-.671	.089	-.449	-1.115
40	909	-.542	.064	-.370	-.772
40	910	-1.032	.219	-.471	-2.084
40	911	-.607	.083	-.386	-1.009
40	912	-.502	.118	-.152	-1.005
40	913	-.602	.091	-.351	-1.094
40	915	-.648	.100	-.323	-1.242
50	101	-.205	.237	.503	-1.087
50	102	-.361	.123	.202	-1.220
50	103	-.783	.204	-.018	-1.626
50	104	-.398	.162	.141	-1.301
50	105	-.671	.158	-.269	-1.485
50	106	-.630	.178	.077	-1.525
50	107	-.493	.250	.419	-1.835
50	108	-.420	.129	.070	-1.040
50	109	-.420	.149	.133	-1.088
50	110	-.631	.162	-.185	-1.433
50	111	-.647	.170	-.136	-1.512
50	112	-.660	.169	-.167	-1.441
50	113	-.674	.171	-.175	-1.504
50	114	-.629	.154	-.192	-1.458
50	115	-.498	.165	.215	-1.307
50	116	-.501	.103	-.192	-.923
50	117	-.504	.105	-.206	-.936
50	118	-.523	.106	-.180	-.958
50	119	-.531	.102	-.227	-.954
50	120	-.564	.123	-.228	-1.185
50	121	-.557	.141	.009	-1.141
50	122	-.577	.192	.048	-1.544
50	123	-.569	.221	.162	-1.530
50	124	-.516	.102	-.259	-.943
50	125	-.522	.112	-.172	-1.273
50	126	-.522	.113	-.169	-1.190
50	127	-.544	.111	-.195	-1.129
50	128	-.560	.127	-.222	-1.201
50	129	-.707	.156	-.011	-1.529
50	130	-.536	.171	.043	-1.453
50	131	-.567	.204	-.030	-1.985
50	133	-.640	.189	-.211	-1.930
50	134	-.639	.195	-.203	-1.901
50	135	-.647	.193	-.219	-2.002
50	136	-.603	.182	.153	-1.375
50	137	-.492	.171	.095	-1.165
50	139	-.535	.109	-.089	-1.271
50	140	-.647	.228	-.167	-1.984
50	141	-.647	.221	-.172	-1.856
50	142	-.647	.239	-.151	-2.194
50	143	-.610	.197	-.115	-1.885
50	144	-.501	.170	.130	-1.262
50	145	-.397	.144	.047	-.983
50	146	-.405	.131	-.018	-1.028
50	147	-.577	.112	-.087	-1.199
50	148	-.691	.199	-.038	-1.427
50	149	-.515	.156	-.070	-1.320
50	150	-.784	.219	-.302	-1.732
50	151	-.655	.157	-.173	-1.258
50	152	-.259	.104	.119	-.832
50	153	-.438	.096	-.197	-.953
50	154	-.198	.104	.295	-.575
50	155	-.453	.095	-.160	-1.129
50	156	-.634	.187	-.182	-2.092
50	157	-.665	.150	-.260	-1.402
50	158	-.628	.116	-.300	-1.550
50	159	-.361	.082	-.058	-.758
50	160	-.148	.103	.312	-.572
50	161	-.660	.097	-.389	-1.119
50	162	-.806	.260	-.125	-1.915
50	163	-.658	.165	-.125	-1.254
50	164	-.618	.088	-.405	-1.251
50	165	-.635	.087	-.417	-1.211
50	166	-1.003	.185	-.400	-1.719
50	167	-.737	.184	-.195	-1.434
50	168	-.537	.071	-.282	-.879
50	169	-.582	.070	-.366	-.907
50	170	-.557	.086	-.297	-1.007
50	171	-.612	.096	-.358	-1.017
50	201	-.473	.141	.023	-1.256
50	202	-.537	.201	.549	-1.263
50	203	-.429	.128	.139	-.860
50	204	-.123	.114	.283	-.568
50	205	.084	.137	.610	-.410
50	206	.052	.156	.661	-.651
50	207	.030	.147	.588	-.591
50	208	.047	.139	.580	-.602
50	209	.310	.162	.829	-.146
50	210	.316	.158	.905	-.181
50	211	.303	.154	.857	-.190
50	212	.404	.153	.899	-.098
50	213	.457	.157	1.009	-.042
50	214	-.189	.149	.268	-1.015
50	215	.360	.160	.990	-.074
50	216	.452	.155	.997	-.002
50	217	.464	.157	.982	.044
50	218	.461	.155	.996	.062
50	219	.445	.154	1.078	.068
50	220	.308	.151	.862	-.066
50	221	.155	.141	.683	-.233
50	222	-.082	.172	.650	-.899
50	223	.214	.158	.943	-.295
50	224	.328	.139	.879	.005
50	225	.293	.153	.936	-.101
50	225	.293	.153	.936	-.101
50	226	.357	.134	.906	.028
50	227	.363	.133	.890	.047
50	228	.214	.127	.781	-.114
50	229	.050	.119	.642	-.276
50	230	-.249	.129	.322	-.857
50	232	.109	.124	.675	-.196
50	233	-.090	.137	.464	-.634
50	234	.052	.120	.480	-.427
50	235	.173	.121	.701	-.263
50	236	.290	.124	.856	-.052
50	237	.141	.128	.720	-.152
50	239	.132	.120	.639	-.226
50	240	-.035	.108	.547	-.399
50	241	-.031	.132	.511	-.652
50	242	-.089	.140	.425	-.953
50	243	-.050	.127	.438	-.455
50	244	.180	.103	.647	-.085
50	245	.238	.105	.699	-.021
50	249	-.083	.131	.472	-.535
50	250	-.252	.127	.175	-.782
50	252	-.255	.078	.165	-.719
50	253	-.296	.082	.040	-.664
50	254	.003	.081	.351	-.228
50	255	.192	.088	.552	-.049
50	256	.101	.109	.638	-.380
50	257	.070	.110	.592	-.322
50	258	-.005	.105	.446	-.347
50	259	-.139	.051	.047	-.495
50	260	.021	.071	.268	-.425
50	261	-.286	.084	.015	-.666
50	262	-.337	.070	-.057	-.627
50	263	-.199	.142	.234	-.910
50	264	-.348	.092	.034	-.775
50	265	-.061	.084	.277	-.333
50	266	.002	.093	.376	-.265

APPENDIX A -- PRESSURE DATA: BASS BROTHERS BUILDING - PHASE I, DALLAS, TEXAS -- CONFIGURATION A

WD	TAP	CPMEAN	CPRMS	CPMAX	CPMIN
50	267	-.050	.090	.299	-.330
50	268	-.126	.083	.189	-.526
50	269	-.141	.098	.336	-.494
50	270	-.523	.105	-.141	-.962
50	271	-.011	.144	.610	-.439
50	272	.257	.140	.903	-.121
50	273	-.100	.137	.497	-.685
50	280	.125	.110	.684	-.398
50	301	-.658	.165	-.206	-1.708
50	302	-.403	.174	.123	-1.433
50	303	-.412	.181	.431	-1.201
50	304	-.402	.180	.530	-1.127
50	305	-.453	.177	.392	-1.180
50	306	-.157	.107	.266	-.538
50	307	-.006	.129	.456	-.484
50	308	-.654	.148	-.195	-1.475
50	309	-.480	.112	-.142	-.953
50	310	-.497	.112	-.170	-.983
50	311	-.427	.120	-.105	-1.018
50	312	-.616	.129	-.247	-1.472
50	313	-.428	.172	.072	-1.306
50	314	-.569	.162	.083	-1.597
50	315	-.610	.146	.049	-1.306
50	316	-.668	.141	-.053	-1.272
50	317	-.421	.127	.132	-.941
50	318	-.666	.146	-.027	-1.365
50	319	-.477	.136	.018	-1.318
50	320	-.518	.152	.115	-1.357
50	321	-.477	.120	-.162	-1.130
50	322	-.483	.106	-.154	-1.002
50	323	-.479	.118	-.161	-1.167
50	324	-.504	.212	.263	-1.798
50	325	-.499	.191	.325	-1.843
50	326	-.487	.148	.091	-1.187
50	327	-.638	.129	-.063	-1.441
50	328	-.468	.119	-.040	-1.126
50	329	-.488	.124	-.023	-1.200
50	330	-.478	.122	-.000	-1.176
50	331	-.529	.207	-.007	-1.717
50	332	-.514	.182	.062	-1.383
50	333	-.474	.127	.081	-1.046
50	334	-.457	.111	.013	-.905
50	335	-.476	.124	-.024	-1.190
50	336	-.463	.110	-.070	-1.084
50	337	-.444	.097	-.144	-.909
50	338	-.438	.094	-.134	-.999
50	339	-.442	.093	-.188	-.964
50	340	-.518	.215	-.049	-2.491
50	341	-.515	.178	.153	-1.998
50	342	-.476	.122	-.137	-1.328

WD	TAP	CPMEAN	CPRMS	CPMAX	CPMIN
50	343	-.459	.110	-.154	-1.127
50	344	-.460	.115	-.164	-1.394
50	345	-.464	.112	-.200	-1.226
50	346	-.452	.103	-.175	-1.148
50	347	-.444	.100	-.163	-1.120
50	348	-.445	.098	-.207	-.981
50	349	-.531	.193	.019	-1.717
50	350	-.509	.157	.098	-1.435
50	352	-.453	.099	-.166	-.926
50	353	-.482	.123	-.197	-1.281
50	354	-.485	.131	-.189	-1.381
50	355	-.480	.133	-.168	-1.413
50	359	-.404	.092	-.121	-.963
50	360	-.535	.094	-.300	-1.147
50	361	-.459	.098	-.214	-.983
50	362	-.463	.102	-.213	-1.075
50	363	-.457	.103	-.194	-1.066
50	364	-.468	.103	-.181	-1.070
50	365	-.659	.141	-.321	-1.624
50	366	-.736	.211	-.205	-2.164
50	367	-.516	.135	-.186	-1.289
50	368	-.632	.125	-.374	-1.379
50	369	-.448	.094	-.206	-.965
50	370	-.434	.076	-.214	-.737
50	371	-.452	.093	-.216	-.955
50	372	-.449	.088	-.204	-.873
50	373	-.587	.116	-.317	-1.219
50	374	-.474	.103	-.240	-.957
50	375	-.437	.085	-.228	-.932
50	376	-.593	.146	-.232	-1.512
50	377	-.662	.131	-.297	-1.834
50	378	-.645	.125	-.337	-1.702
50	379	-.652	.099	-.449	-1.176
50	380	-.657	.100	-.395	-1.195
50	381	-.472	.099	-.249	-.878
50	382	-.639	.115	-.350	-1.117
50	383	-.625	.089	-.375	-1.215
50	384	-.716	.143	-.373	-1.532
50	385	-.685	.117	-.435	-1.281
50	386	-.657	.144	-.239	-1.663
50	387	-.694	.128	-.390	-1.353
50	388	-.753	.157	-.368	-1.696
50	389	-.678	.122	-.376	-1.404
50	390	-.757	.138	-.407	-1.466
50	391	-.868	.150	-.493	-1.574
50	392	-.755	.132	-.368	-1.317
50	393	-.863	.222	-.211	-1.836
50	401	-.359	.093	-.096	-.766
50	402	-.387	.098	-.122	-.856
50	403	-.555	.101	-.246	-1.198

WD	TAP	CPMEAN	CPRMS	CPMAX	CPMIN
50	404	-.535	.087	-.233	-1.161
50	405	-.337	.088	-.042	-.961
50	406	-.462	.116	-.096	-1.246
50	407	-.359	.114	.021	-1.023
50	408	-.550	.117	-.119	-1.150
50	409	-.531	.096	-.248	-1.026
50	410	-.526	.092	-.252	-1.042
50	411	-.504	.074	-.280	-.918
50	412	-.501	.093	-.265	-1.152
50	413	-.550	.112	-.290	-1.426
50	414	-.347	.101	-.004	-.949
50	415	-.574	.118	-.262	-1.439
50	416	-.318	.072	-.097	-.659
50	417	-.336	.069	-.121	-.650
50	418	-.335	.076	-.109	-.694
50	419	-.390	.115	-.023	-.990
50	420	-.386	.110	-.054	-.953
50	421	-.508	.084	-.254	-.988
50	422	-.474	.090	-.195	-1.073
50	423	-.508	.105	-.160	-1.203
50	424	-.471	.148	-.009	-1.081
50	425	-.385	.100	-.002	-.778
50	426	-.339	.075	-.049	-.653
50	427	-.313	.059	-.070	-.533
50	428	-.329	.057	-.126	-.583
50	429	-.508	.060	-.304	-.837
50	430	-.332	.068	-.102	-.704
50	431	-.348	.079	-.028	-.715
50	432	-.386	.092	-.064	-.771
50	433	-.515	.142	-.077	-1.351
50	434	-.415	.091	-.135	-.767
50	435	-.364	.076	-.116	-.630
50	436	-.344	.064	-.145	-.588
50	437	-.352	.062	-.157	-.602
50	438	-.341	.061	-.130	-.630
50	439	-.544	.069	-.277	-.808
50	440	-.347	.069	-.120	-.671
50	441	-.376	.082	-.114	-.788
50	442	-.553	.078	-.266	-.879
50	443	-.368	.076	-.123	-.702
50	444	-.396	.095	-.064	-.876
50	445	-.397	.074	-.108	-.764
50	446	-.403	.079	-.105	-.797
50	447	-.401	.088	-.086	-.827
50	449	-.525	.084	-.288	-1.109
50	450	-.390	.063	-.235	-.703
50	451	-.619	.078	-.394	-.923
50	452	-.550	.095	-.073	-1.166
50	453	-.568	.098	-.256	-1.292
50	454	-.407	.090	-.178	-.926

APPENDIX A -- PRESSURE DATA: BASS BROTHERS BUILDING - PHASE I, DALLAS, TEXAS -- CONFIGURATION A

WD	TAP	CPMEAN	CPRMS	CPMAX	CPMIN
50	455	-.578	.087	-.319	-1.048
50	456	-.391	.061	-.207	-.619
50	457	-.386	.064	-.191	-.686
50	458	-.384	.056	-.226	-.631
50	459	-.398	.060	-.205	-.669
50	460	-.399	.075	-.118	-.960
50	461	-.513	.087	-.187	-.903
50	462	-.418	.080	-.180	-.808
50	463	-.396	.069	-.199	-.717
50	464	-.532	.074	-.298	-.847
50	465	-.629	.073	-.430	-.900
50	466	-.427	.082	-.226	-.804
50	467	-.416	.079	-.211	-.755
50	468	-.419	.077	-.226	-.737
50	469	-.631	.079	-.380	-.972
50	470	-.400	.080	-.123	-.902
50	471	-.391	.094	-.100	-.926
50	472	-.644	.081	-.423	-.997
50	473	-.590	.083	-.337	-.930
50	474	-.635	.084	-.413	-1.113
50	475	-.640	.090	-.400	-1.078
50	476	-.593	.097	-.283	-1.198
50	477	-.526	.086	-.195	-1.111
50	478	-.566	.093	-.286	-1.009
50	479	-.639	.088	-.401	-1.019
50	480	-.624	.083	-.407	-1.045
50	481	-.630	.094	-.380	-1.070
50	482	-.610	.093	-.361	-1.059
50	483	-.621	.092	-.373	-.990
50	484	-.585	.117	-.218	-1.265
50	702	-.389	.063	-.194	-.676
50	703	-.401	.072	.040	-.769
50	704	-.599	.108	-.352	-1.227
50	801	-.229	.176	.377	-1.082
50	802	-.343	.171	.252	-1.051
50	803	-.755	.200	-.262	-1.429
50	804	-.568	.142	-.110	-1.344
50	805	-.608	.179	.215	-1.850
50	806	-.444	.124	.004	-.997
50	807	-.584	.127	-.233	-1.292
50	808	-.416	.133	.081	-1.294
50	809	-.499	.120	-.057	-1.088
50	810	-.592	.140	-.162	-1.292
50	811	-.345	.154	.274	-1.005
50	905	-.878	.242	-.337	-2.093
50	906	-.725	.136	-.395	-1.367
50	907	-.874	.201	-.267	-1.592
50	908	-.632	.085	-.330	-.956
50	909	-.514	.068	-.312	-.760
50	910	-1.010	.224	-.462	-2.295

WD	TAP	CPMEAN	CPRMS	CPMAX	CPMIN
50	911	-.573	.087	-.354	-1.124
50	912	-.470	.123	-.052	-1.064
50	913	-.518	.086	-.215	-.970
50	915	-.612	.100	-.288	-1.158
60	101	-.442	.162	.450	-1.258
60	102	-.430	.163	.218	-1.326
60	103	-.699	.180	-.041	-1.468
60	104	-.375	.173	.072	-1.208
60	105	-.471	.118	-.143	-1.029
60	106	-.493	.142	-.089	-1.294
60	107	-.499	.175	-.014	-1.584
60	108	-.426	.152	.299	-1.386
60	109	-.462	.179	.284	-1.389
60	110	-.428	.109	-.108	-1.038
60	111	-.443	.116	-.082	-1.270
60	112	-.446	.116	-.115	-1.078
60	113	-.456	.120	-.151	-1.158
60	114	-.465	.122	-.086	-1.112
60	115	-.447	.123	-.047	-1.086
60	116	-.404	.085	-.119	-.758
60	117	-.400	.085	-.087	-.752
60	118	-.415	.085	-.110	-.743
60	119	-.409	.083	-.138	-.833
60	120	-.440	.096	-.153	-1.021
60	121	-.457	.107	-.153	-.941
60	122	-.507	.159	-.048	-1.450
60	123	-.516	.177	.010	-1.515
60	124	-.431	.093	-.168	-.883
60	125	-.438	.090	-.189	-.897
60	126	-.433	.089	-.181	-.929
60	127	-.449	.086	-.199	-.949
60	128	-.472	.097	-.190	-.953
60	129	-.653	.134	-.310	-1.473
60	130	-.511	.145	-.164	-1.204
60	131	-.533	.164	-.159	-1.392
60	133	-.505	.147	-.142	-1.722
60	134	.495	.147	-.137	-1.798
60	135	-.504	.151	-.156	-1.827
60	136	-.497	.147	-.187	-1.481
60	137	-.482	.128	-.116	-1.107
60	139	-.559	.105	-.237	-1.203
60	140	-.485	.156	-.182	-1.532
60	141	-.493	.156	-.193	-1.564
60	142	-.483	.150	-.174	-1.612
60	143	-.484	.154	-.168	-1.511
60	144	-.477	.141	-.126	-1.308
60	145	-.449	.120	-.057	-1.001
60	146	-.419	.121	.047	-.973
60	147	-.601	.120	-.215	-1.281
60	148	-.633	.177	-.072	-1.514

WD	TAP	CPMEAN	CPRMS	CPMAX	CPMIN
60	149	-.483	.152	-.123	-1.350
60	150	-.634	.175	-.239	-1.557
60	151	-.650	.142	-.285	-1.417
60	152	-.319	.088	.067	-.674
60	153	-.427	.093	-.167	-.895
60	154	-.237	.091	.208	-.567
60	155	-.456	.102	-.181	-.845
60	156	-.620	.209	-.119	-2.009
60	157	-.572	.146	-.149	-1.501
60	158	-.595	.119	-.237	-1.355
60	159	-.334	.079	.051	-.711
60	160	-.126	.102	.249	-.559
60	161	-.633	.097	-.331	-1.040
60	162	-.722	.250	-.041	-2.316
60	163	-.605	.161	-.075	-1.448
60	164	-.571	.071	-.366	-.857
60	165	-.592	.072	-.395	-.883
60	166	-.930	.189	-.299	-1.668
60	167	-.684	.191	-.019	-1.586
60	168	-.512	.071	-.289	-1.056
60	169	-.550	.065	-.318	-.927
60	170	-.522	.084	-.216	-.903
60	171	-.609	.082	-.359	-1.078
60	201	-.513	.165	.188	-1.186
60	202	-.537	.249	.681	-1.260
60	203	-.411	.155	.164	-.920
60	204	-.112	.123	.386	-.484
60	205	.054	.140	.519	-.617
60	206	.089	.149	.703	-.475
60	207	.052	.130	.649	-.407
60	208	.111	.158	.870	-.353
60	209	.339	.156	.920	-.133
60	210	.331	.148	.822	-.167
60	211	.323	.146	.856	-.153
60	212	.389	.148	.884	-.001
60	213	.436	.154	.935	.033
60	214	-.120	.169	.527	-.800
60	215	.389	.167	.929	-.169
60	216	.460	.155	.919	.012
60	217	.449	.154	1.046	.041
60	218	.438	.150	1.011	.041
60	219	.401	.151	1.013	.043
60	220	.240	.134	.746	-.121
60	221	.098	.118	.496	-.243
60	222	-.008	.166	.650	-.655
60	223	.283	.178	.911	-.231
60	224	.363	.150	.988	-.012
60	225	.317	.152	.904	-.075
60	225	.317	.152	.904	-.075
60	226	.376	.142	1.020	.044

APPENDIX A -- PRESSURE DATA: BASS BROTHERS BUILDING - PHASE I, DALLAS, TEXAS -- CONFIGURATION A

WD	TAP	CPMEAN	CPRMS	CPMAX	CPMIN
60	227	.340	.123	.851	.047
60	228	.158	.108	.596	-.140
60	229	.003	.097	.450	-.343
60	230	-.199	.156	.408	-.820
60	232	.081	.119	.544	-.243
60	233	-.083	.141	.398	-.891
60	234	.072	.126	.475	-.552
60	235	.174	.118	.746	-.238
60	236	.269	.115	.809	.001
60	237	.119	.124	.606	-.174
60	239	.101	.107	.554	-.256
60	240	-.036	.096	.426	-.403
60	241	.034	.143	.616	-.529
60	242	-.052	.147	.661	-.834
60	243	-.013	.136	.598	-.559
60	244	.195	.108	.755	-.066
60	245	.227	.100	.773	-.025
60	249	-.048	.143	.523	-.634
60	250	-.264	.111	.143	-.772
60	252	-.256	.083	.096	-.575
60	253	-.292	.095	.060	-.679
60	254	.018	.095	.447	-.279
60	255	.199	.092	.575	-.016
60	256	.138	.113	.651	-.208
60	257	.093	.114	.625	-.461
60	258	-.045	.100	.468	-.418
60	259	-.169	.053	-.016	-.415
60	260	-.013	.068	.236	-.398
60	261	-.314	.090	.017	-.686
60	262	-.348	.081	-.024	-.697
60	263	-.151	.139	.266	-.835
60	264	-.359	.096	-.077	-.810
60	265	-.055	.084	.372	-.290
60	266	.015	.094	.440	-.218
60	267	-.051	.087	.353	-.351
60	268	-.107	.085	.270	-.482
60	269	-.156	.102	.236	-.617
60	270	-.509	.115	-.114	-.978
60	271	.013	.167	.779	-.407
60	272	.242	.140	.901	-.120
60	273	-.095	.140	.462	-.692
60	280	.133	.105	.649	-.275
60	301	-.742	.193	-.232	-1.642
60	302	-.409	.144	.055	-1.048
60	303	-.319	.196	.480	-.966
60	304	-.322	.243	.627	-1.296
60	305	-.461	.249	.891	-1.546
60	306	-.091	.119	.291	-.520
60	307	.052	.140	.547	-.575
60	308	-.876	.217	-.195	-1.841

WD	TAP	CPMEAN	CPRMS	CPMAX	CPMIN
60	309	-.537	.149	.139	-1.213
60	310	-.586	.125	-.115	-1.155
60	311	-.565	.146	-.124	-1.454
60	312	-.810	.199	-.279	-1.723
60	313	-.425	.160	.081	-1.406
60	314	-.504	.213	.262	-1.403
60	315	-.572	.222	.531	-1.458
60	316	-.685	.214	.893	-1.685
60	317	-.414	.149	.067	-.998
60	318	-.677	.193	.145	-1.459
60	319	-.505	.204	.398	-1.377
60	320	-.616	.206	.271	-1.651
60	321	-.585	.164	-.143	-1.571
60	322	-.566	.138	-.123	-1.303
60	323	-.554	.130	-.092	-1.171
60	324	-.457	.194	.091	-1.330
60	325	-.468	.235	.493	-1.456
60	326	-.522	.199	.569	-1.404
60	327	-.712	.197	.258	-1.666
60	328	-.565	.158	-.123	-1.439
60	329	-.574	.156	-.100	-1.600
60	330	-.563	.154	-.102	-1.620
60	331	-.513	.220	.043	-1.748
60	332	-.520	.218	.378	-1.641
60	333	-.487	.140	.217	-1.049
60	334	-.467	.127	.258	-1.020
60	335	-.536	.162	.079	-1.325
60	336	-.532	.153	-.036	-1.605
60	337	-.504	.125	-.116	-1.379
60	338	-.500	.115	-.122	-1.141
60	339	-.502	.112	-.140	-1.054
60	340	-.525	.223	.068	-2.375
60	341	-.532	.192	.238	-1.772
60	342	-.512	.142	-.047	-1.207
60	343	-.489	.125	-.109	-1.072
60	344	-.535	.153	-.154	-1.452
60	345	-.552	.152	-.149	-1.679
60	346	-.534	.135	-.182	-1.348
60	347	-.519	.127	-.202	-1.312
60	348	-.525	.129	-.102	-1.292
60	349	-.512	.208	-.002	-1.701
60	350	-.490	.193	.180	-1.568
60	352	-.463	.130	.272	-1.086
60	353	-.591	.177	-.047	-1.382
60	354	-.611	.195	-.025	-1.732
60	355	-.607	.203	-.000	-2.101
60	359	-.418	.093	-.176	-1.065
60	360	-.548	.104	-.268	-1.078
60	361	-.485	.115	-.125	-1.024
60	362	-.487	.120	-.211	-1.634

WD	TAP	CPMEAN	CPRMS	CPMAX	CPMIN
60	363	-.470	.116	-.205	-1.147
60	364	-.476	.112	-.193	-1.222
60	365	-.710	.178	-.338	-1.852
60	366	-.908	.288	.159	-2.131
60	367	-.549	.151	-.210	-1.382
60	368	-.690	.129	-.334	-1.543
60	369	-.493	.105	-.192	-1.047
60	370	-.474	.085	-.188	-.803
60	371	-.469	.096	-.215	-1.072
60	372	-.469	.090	-.232	-1.019
60	373	-.616	.124	-.306	-1.415
60	374	-.488	.098	-.242	-.959
60	375	-.455	.085	-.194	-.884
60	376	-.591	.150	-.161	-1.382
60	377	-.676	.150	.040	-1.548
60	378	-.675	.122	-.344	-1.311
60	379	-.696	.115	-.318	-1.170
60	380	-.692	.110	-.405	-1.202
60	381	-.483	.095	-.201	-.870
60	382	-.685	.123	-.361	-1.290
60	383	-.633	.092	-.370	-1.163
60	384	-.777	.163	-.382	-1.669
60	385	-.740	.125	-.440	-1.249
60	386	-.664	.154	-.341	-1.751
60	387	-.735	.134	-.405	-1.253
60	388	-.796	.163	-.351	-1.519
60	389	-.689	.118	-.363	-1.360
60	390	-.750	.137	-.321	-1.323
60	391	-.873	.148	-.488	-1.504
60	392	-.756	.144	-.194	-1.312
60	393	-.847	.235	.016	-1.922
60	401	-.393	.121	-.027	-.994
60	402	-.397	.122	-.069	-1.155
60	403	-.542	.099	-.221	-.986
60	404	-.533	.092	-.228	-.925
60	405	-.361	.104	-.053	-.894
60	406	-.473	.109	-.118	-.994
60	407	-.357	.101	.003	-.826
60	408	-.570	.141	-.191	-1.461
60	409	-.564	.119	-.216	-1.244
60	410	-.572	.112	-.247	-1.228
60	411	-.506	.073	-.299	-.839
60	412	-.504	.100	-.232	-1.077
60	413	-.580	.128	-.230	-1.194
60	414	-.402	.123	-.045	-1.269
60	415	-.632	.150	-.220	-1.714
60	416	-.327	.067	-.129	-.612
60	417	-.341	.070	-.114	-.660
60	418	-.348	.083	-.061	-.777
60	419	-.397	.126	-.028	-1.000

APPENDIX A -- PRESSURE DATA: BASS BROTHERS BUILDING - PHASE I, DALLAS, TEXAS -- CONFIGURATION A

WD	TAP	CPMEAN	CPRMS	CPMAX	CPMIN
60	420	-.392	.122	-.035	-1.210
60	421	-.495	.092	-.173	-1.109
60	422	-.463	.100	-.159	-1.081
60	423	-.538	.131	-.180	-1.278
60	424	-.376	.090	-.111	-.867
60	425	-.332	.068	-.088	-.600
60	426	-.316	.060	-.088	-.576
60	427	-.312	.059	-.136	-.548
60	428	-.340	.066	-.164	-.624
60	429	-.529	.080	-.235	-.889
60	430	-.363	.090	-.123	-.815
60	431	-.396	.104	-.088	-.962
60	432	-.419	.117	-.083	-.981
60	433	-.436	.108	-.147	-1.173
60	434	-.357	.074	-.134	-.769
60	435	-.334	.061	-.134	-.594
60	436	-.327	.055	-.149	-.553
60	437	-.336	.057	-.097	-.700
60	438	-.342	.065	-.171	-.752
60	439	-.548	.078	-.284	-.971
60	440	-.390	.090	-.086	-.770
60	441	-.411	.105	-.045	-.845
60	442	-.543	.085	-.312	-.907
60	443	-.383	.083	-.148	-.713
60	444	-.390	.097	-.066	-.815
60	445	-.351	.058	-.172	-.600
60	446	-.352	.063	-.108	-.634
60	447	-.391	.084	-.094	-.795
60	449	-.507	.079	-.284	-1.148
60	450	-.364	.058	-.204	-.610
60	451	-.561	.071	-.323	-.855
60	452	-.530	.086	-.256	-.966
60	453	-.571	.099	-.240	-1.345
60	454	-.413	.090	-.139	-.995
60	455	-.558	.086	-.296	-.910
60	456	-.373	.065	-.137	-.675
60	457	-.368	.059	-.193	-.631
60	458	-.356	.056	-.178	-.554
60	459	-.364	.060	-.009	-.619
60	460	-.361	.064	-.047	-.619
60	461	-.492	.085	-.212	-.895
60	462	-.421	.080	-.206	-.817
60	463	-.394	.066	-.180	-.657
60	464	-.500	.069	-.307	-.742
60	465	-.602	.071	-.372	-.947
60	466	-.406	.070	-.219	-.703
60	467	-.396	.066	-.227	-.657
60	468	-.394	.064	-.223	-.672
60	469	-.599	.073	-.294	-.937
60	470	-.376	.070	-.132	-.836

WD	TAP	CPMEAN	CPRMS	CPMAX	CPMIN
60	471	-.393	.086	-.173	-.843
60	472	-.628	.077	-.379	-.952
60	473	-.576	.083	-.334	-.907
60	474	-.609	.075	-.430	-1.073
60	475	-.607	.079	-.206	-1.025
60	476	-.572	.087	-.231	-.926
60	477	-.514	.082	-.217	-.871
60	478	-.582	.093	-.293	-1.044
60	479	-.616	.078	-.334	-1.005
60	480	-.589	.076	-.375	-.917
60	481	-.614	.083	-.354	-1.114
60	482	-.577	.083	-.376	-1.101
60	483	-.574	.085	-.299	-.970
60	484	-.594	.092	-.226	-1.149
60	702	-.367	.054	-.175	-.574
60	703	-.376	.064	-.160	-.613
60	704	-.582	.105	-.274	-1.179
60	801	-.364	.144	.183	-1.055
60	802	-.430	.121	.041	-1.064
60	803	-.645	.177	-.203	-1.301
60	804	-.597	.160	-.018	-1.430
60	805	-.818	.279	-.219	-2.150
60	806	-.466	.137	.047	-1.104
60	807	-.624	.130	-.190	-1.151
60	808	-.428	.150	.099	-1.316
60	809	-.521	.146	.020	-1.133
60	810	-.584	.153	-.051	-1.279
60	811	-.255	.180	.370	-.929
60	905	-.708	.185	-.188	-2.148
60	906	-.647	.117	-.269	-1.148
60	907	-.807	.205	-.147	-1.525
60	908	-.595	.072	-.331	-.881
60	909	-.461	.059	-.282	-.693
60	910	-1.000	.223	-.410	-1.994
60	911	-.530	.076	-.284	-.841
60	912	-.476	.123	-.078	-1.054
60	913	-.520	.103	-.188	-1.056
60	915	-.597	.097	-.332	-1.266
70	101	-.411	.130	.044	-1.253
70	102	-.407	.137	.056	-1.189
70	103	-.598	.130	-.257	-1.233
70	104	-.497	.156	-.014	-1.198
70	105	-.374	.073	-.149	-.719
70	106	-.386	.085	-.111	-.966
70	107	-.400	.100	-.136	-1.280
70	108	-.371	.094	-.071	-.850
70	109	-.391	.108	.053	-1.080
70	110	-.357	.064	-.156	-.630
70	111	-.369	.066	-.175	-.647
70	112	-.368	.062	-.184	-.658

WD	TAP	CPMEAN	CPRMS	CPMAX	CPMIN
70	113	-.378	.062	-.187	-.708
70	114	-.369	.066	-.188	-.701
70	115	-.382	.080	-.098	-.822
70	116	-.357	.059	-.111	-.561
70	117	-.354	.058	-.153	-.560
70	118	-.371	.059	-.180	-.577
70	119	-.371	.059	-.145	-.584
70	120	-.400	.062	-.147	-.668
70	121	-.413	.070	-.191	-.719
70	122	-.449	.101	-.136	-.996
70	123	-.434	.109	-.154	-1.103
70	124	-.379	.067	-.201	-.813
70	125	-.389	.066	-.192	-.687
70	126	-.387	.066	-.196	-.714
70	127	-.406	.064	-.213	-.689
70	128	-.406	.067	-.209	-.731
70	129	-.589	.087	-.356	-1.000
70	130	-.449	.107	-.200	-1.008
70	131	-.473	.121	-.208	-1.489
70	133	-.455	.094	-.206	-1.074
70	134	-.438	.094	-.205	-1.079
70	135	-.446	.098	-.203	-1.125
70	136	-.450	.110	-.196	-1.275
70	137	-.468	.111	-.151	-1.245
70	139	-.551	.095	-.247	-1.122
70	140	-.429	.099	-.189	-1.102
70	141	-.441	.100	-.205	-1.125
70	142	-.439	.113	-.180	-1.220
70	143	-.447	.119	-.180	-1.307
70	144	-.451	.130	-.187	-1.290
70	145	-.451	.114	-.087	-1.159
70	146	-.407	.099	-.050	-.960
70	147	-.584	.103	-.093	-1.065
70	148	-.637	.146	-.167	-1.318
70	149	-.521	.141	-.161	-1.232
70	150	-.575	.132	-.179	-1.185
70	151	-.614	.128	-.277	-1.255
70	152	-.340	.080	.035	-.794
70	153	-.414	.088	-.189	-.807
70	154	-.253	.082	.126	-.513
70	155	-.447	.098	-.198	-.923
70	156	-.665	.193	-.217	-1.783
70	157	-.527	.121	-.175	-1.188
70	158	-.584	.102	-.302	-1.133
70	159	-.327	.083	-.028	-.725
70	160	-.124	.100	.352	-.499
70	161	-.622	.100	-.283	-1.110
70	162	-.766	.284	-.041	-1.982
70	163	-.638	.179	-.060	-1.423
70	164	-.535	.070	-.248	-.811

APPENDIX A -- PRESSURE DATA: BASS BROTHERS BUILDING - PHASE I, DALLAS, TEXAS -- CONFIGURATION A

WD	TAP	CPMEAN	CPRMS	CPMAX	CPMIN
70	165	-.553	.071	-.273	-.784
70	166	-.896	.170	-.192	-1.636
70	167	-.654	.165	-.196	-1.289
70	168	-.500	.071	-.204	-.867
70	169	-.525	.066	-.220	-.789
70	170	-.481	.079	-.185	-.803
70	171	-.613	.079	-.340	-.930
70	201	-.448	.199	.596	-1.167
70	202	-.455	.282	1.015	-1.175
70	203	-.348	.173	.340	-.908
70	204	-.071	.135	.432	-.483
70	205	.062	.138	.639	-.396
70	206	.105	.150	.796	-.378
70	207	.027	.113	.480	-.337
70	208	.131	.182	.901	-.421
70	209	.353	.182	1.015	-.216
70	210	.336	.170	.985	-.182
70	211	.330	.171	1.004	-.129
70	212	.390	.155	.876	-.074
70	213	.420	.158	.946	-.071
70	214	-.097	.161	.665	-.637
70	215	.407	.181	1.183	-.091
70	216	.455	.168	1.088	.017
70	217	.483	.172	1.179	.050
70	218	.459	.161	1.042	.048
70	219	.414	.145	.957	.049
70	220	.219	.115	.692	-.166
70	221	.070	.096	.543	-.263
70	222	.044	.163	.877	-.469
70	223	.300	.168	.875	-.149
70	224	.414	.156	1.084	.026
70	225	.293	.150	.932	-.123
70	225	.293	.150	.932	-.123
70	226	.403	.138	.865	.064
70	227	.337	.125	.816	.054
70	228	.133	.101	.516	-.122
70	229	-.020	.088	.334	-.259
70	230	-.143	.162	.452	-.852
70	232	.076	.113	.601	-.211
70	233	-.029	.149	.490	-.611
70	234	.108	.133	.604	-.441
70	235	.181	.131	.862	-.221
70	236	.237	.113	.656	-.076
70	237	.128	.120	.673	-.182
70	239	.054	.088	.432	-.203
70	240	-.090	.077	.275	-.548
70	241	.042	.148	.654	-.491
70	242	.004	.152	.682	-.519
70	243	.060	.147	.906	-.426
70	244	.213	.121	.839	-.055

WD	TAP	CPMEAN	CPRMS	CPMAX	CPMIN
70	245	.212	.100	.690	-.045
70	249	.021	.159	1.064	-.459
70	250	-.291	.087	.187	-.665
70	252	-.276	.078	.066	-.540
70	253	-.294	.092	.114	-.663
70	254	.027	.105	.552	-.275
70	255	.194	.098	.685	-.059
70	256	.121	.107	.621	-.188
70	257	.061	.104	.558	-.329
70	258	-.088	.090	.417	-.528
70	259	-.210	.051	-.035	-.455
70	260	-.062	.069	.206	-.399
70	261	-.364	.097	-.025	-.923
70	262	-.340	.080	.027	-.644
70	263	-.131	.120	.239	-.802
70	264	-.372	.094	-.072	-.781
70	265	-.049	.086	.352	-.255
70	266	.006	.088	.436	-.219
70	267	-.078	.078	.255	-.363
70	268	-.127	.081	.161	-.593
70	269	-.193	.090	.276	-.599
70	270	-.481	.100	-.115	-.965
70	271	.037	.168	.858	-.416
70	272	.260	.136	.910	-.059
70	273	-.132	.128	.362	-.665
70	280	.150	.102	.640	-.199
70	301	-.736	.183	-.256	-1.621
70	302	-.480	.160	.093	-1.249
70	303	-.234	.184	.643	-.902
70	304	-.158	.247	.685	-1.260
70	305	-.310	.296	.779	-1.299
70	306	-.021	.123	.460	-.480
70	307	.122	.139	.655	-.372
70	308	-1.001	.229	-.358	-2.183
70	309	-.470	.185	.399	-1.210
70	310	-.559	.131	-.164	-1.153
70	311	-.641	.159	-.165	-1.473
70	312	-.927	.204	-.423	-1.859
70	313	-.439	.132	-.025	-1.049
70	314	-.412	.202	.284	-1.218
70	315	-.448	.249	.539	-1.333
70	316	-.565	.290	.799	-1.601
70	317	-.415	.131	-.071	-1.045
70	318	-.659	.230	.070	-1.504
70	319	-.465	.224	.367	-1.510
70	320	-.615	.207	.251	-1.559
70	321	-.631	.161	-.166	-1.547
70	322	-.598	.149	.418	-1.236
70	323	-.606	.152	-.141	-1.587
70	324	-.422	.132	.003	-1.167

WD	TAP	CPMEAN	CPRMS	CPMAX	CPMIN
70	325	-.394	.212	.551	-1.284
70	326	-.498	.210	.537	-1.444
70	327	-.654	.216	.254	-1.440
70	328	-.624	.144	-.197	-1.578
70	329	-.630	.145	-.166	-1.442
70	330	-.617	.146	-.154	-1.727
70	331	-.485	.146	-.002	-1.325
70	332	-.514	.152	.165	-1.392
70	333	-.498	.108	.271	-.930
70	334	-.482	.109	.006	-.915
70	335	-.555	.134	-.178	-1.315
70	336	-.560	.138	-.151	-1.239
70	337	-.524	.116	-.154	-1.116
70	338	-.517	.109	-.151	-1.029
70	339	-.512	.106	-.162	-1.003
70	340	-.506	.165	-.037	-1.360
70	341	-.510	.145	.157	-1.238
70	342	-.490	.107	-.063	-1.205
70	343	-.472	.096	-.117	-1.103
70	344	-.521	.123	-.237	-1.206
70	345	-.531	.123	-.213	-1.097
70	346	-.516	.111	-.202	-.968
70	347	-.503	.103	-.202	-.896
70	348	-.495	.100	-.173	-.940
70	349	-.517	.180	-.072	-1.679
70	350	-.505	.159	.368	-1.583
70	352	-.473	.102	.138	-1.192
70	353	-.575	.147	-.150	-1.447
70	354	-.595	.160	-.162	-1.419
70	355	-.585	.164	-.184	-1.449
70	359	-.430	.092	-.152	-.879
70	360	-.527	.091	-.266	-1.110
70	361	-.489	.097	-.177	-1.034
70	362	-.504	.103	-.211	-1.204
70	363	-.480	.105	-.207	-1.313
70	364	-.488	.098	-.210	-1.107
70	365	-.705	.164	-.324	-1.628
70	366	-.911	.255	-.110	-2.127
70	367	-.535	.130	-.166	-1.222
70	368	-.691	.107	-.421	-1.282
70	369	-.484	.085	-.244	-.893
70	370	-.475	.069	-.266	-.760
70	371	-.471	.078	-.258	-.932
70	372	-.485	.078	-.245	-.859
70	373	-.608	.104	-.335	-1.256
70	374	-.486	.073	-.295	-.753
70	375	-.477	.075	-.270	-.854
70	376	-.554	.138	.028	-1.279
70	377	-.641	.158	.126	-1.346
70	378	-.657	.113	-.004	-1.400

APPENDIX A -- PRESSURE DATA: BASS BROTHERS BUILDING - PHASE I, DALLAS, TEXAS -- CONFIGURATION A

WD	TAP	CPMEAN	CPRMS	CPMAX	CPMIN
70	379	-.705	.093	-.358	-1.161
70	380	-.695	.097	-.405	-1.063
70	381	-.498	.076	-.274	-.861
70	382	-.693	.097	-.375	-1.242
70	383	-.613	.081	-.348	-.981
70	384	-.798	.144	-.289	-1.634
70	385	-.752	.113	-.446	-1.330
70	386	-.638	.140	-.253	-1.366
70	387	-.736	.120	-.355	-1.322
70	388	-.804	.143	-.365	-1.502
70	389	-.717	.114	-.419	-1.193
70	390	-.713	.128	-.354	-1.249
70	391	-.865	.137	-.392	-1.405
70	392	-.738	.137	-.261	-1.197
70	393	-.713	.203	-.018	-1.616
70	401	-.372	.091	-.114	-.985
70	402	-.380	.086	-.122	-.902
70	403	-.548	.087	-.192	-1.005
70	404	-.548	.092	-.297	-1.122
70	405	-.397	.091	-.142	-.930
70	406	-.483	.090	-.213	-.881
70	407	-.379	.089	-.106	-.867
70	408	-.548	.096	-.209	-1.261
70	409	-.566	.088	-.304	-1.030
70	410	-.592	.084	-.322	-.950
70	411	-.538	.066	-.324	-.794
70	412	-.516	.086	-.258	-.913
70	413	-.578	.104	-.230	-1.120
70	414	-.424	.104	-.107	-.862
70	415	-.674	.125	-.281	-1.334
70	416	-.362	.058	-.178	-.552
70	417	-.375	.064	-.150	-.619
70	418	-.396	.073	-.153	-.682
70	419	-.425	.114	-.133	-1.052
70	420	-.426	.111	-.146	-1.163
70	421	-.539	.088	-.258	-1.019
70	422	-.498	.094	-.221	-.979
70	423	-.552	.115	-.216	-1.187
70	424	-.381	.065	-.152	-.616
70	425	-.379	.061	-.155	-.660
70	426	-.372	.057	-.170	-.593
70	427	-.374	.059	-.157	-.604
70	428	-.398	.065	-.194	-.694
70	429	-.566	.075	-.375	-.879
70	430	-.415	.092	-.172	-1.022
70	431	-.411	.106	-.103	-1.333
70	432	-.431	.113	-.140	-1.149
70	433	-.368	.070	-.175	-.887
70	434	-.323	.053	-.108	-.561
70	435	-.326	.048	-.155	-.498

WD	TAP	CPMEAN	CPRMS	CPMAX	CPMIN
70	436	-.328	.045	-.169	-.471
70	437	-.349	.047	-.157	-.529
70	438	-.362	.050	-.214	-.574
70	439	-.557	.064	-.321	-.835
70	440	-.396	.065	-.162	-.716
70	441	-.419	.077	-.122	-.947
70	442	-.577	.077	-.346	-.930
70	443	-.391	.065	-.172	-.652
70	444	-.399	.080	-.069	-.812
70	445	-.346	.050	-.170	-.568
70	446	-.349	.057	-.079	-.611
70	447	-.406	.076	-.170	-.835
70	449	-.472	.072	-.144	-.785
70	450	-.325	.047	-.117	-.546
70	451	-.514	.052	-.225	-.802
70	452	-.534	.082	-.310	-.917
70	453	-.572	.094	-.262	-1.176
70	454	-.389	.083	-.109	-.852
70	455	-.519	.072	-.265	-.816
70	456	-.339	.055	-.133	-.511
70	457	-.337	.049	-.127	-.533
70	458	-.326	.044	-.159	-.483
70	459	-.331	.053	-.063	-.538
70	460	-.339	.061	-.085	-.569
70	461	-.491	.082	-.256	-.905
70	462	-.401	.077	-.098	-.736
70	463	-.365	.064	-.081	-.679
70	464	-.461	.051	-.268	-.655
70	465	-.581	.065	-.370	-.904
70	466	-.397	.066	-.198	-.656
70	467	-.379	.065	-.076	-.618
70	468	-.376	.062	-.088	-.581
70	469	-.537	.070	-.226	-.954
70	470	-.356	.068	-.096	-.881
70	471	-.402	.085	-.170	-.948
70	472	-.603	.068	-.243	-1.108
70	473	-.556	.070	-.304	-.894
70	474	-.605	.065	-.190	-.843
70	475	-.555	.073	-.175	-.837
70	476	-.533	.080	-.172	-.837
70	477	-.494	.077	-.278	-.873
70	478	-.560	.084	-.303	-1.091
70	479	-.581	.068	-.312	-.846
70	480	-.547	.066	-.266	-.802
70	481	-.594	.077	-.279	-.902
70	482	-.549	.074	-.287	-.852
70	483	-.542	.070	-.290	-.938
70	484	-.583	.097	-.306	-1.036
70	702	-.355	.045	-.194	-.548
70	703	-.383	.056	-.178	-.659

WD	TAP	CPMEAN	CPRMS	CPMAX	CPMIN
70	704	-.561	.091	-.227	-1.033
70	801	-.390	.119	.071	-.933
70	802	-.397	.095	-.041	-.826
70	803	-.499	.102	-.162	-.931
70	804	-.602	.163	-.016	-1.276
70	805	-.928	.300	-.330	-2.286
70	806	-.464	.140	.010	-1.461
70	807	-.625	.125	-.184	-1.072
70	808	-.439	.165	.108	-1.235
70	809	-.471	.184	.203	-1.265
70	810	-.528	.156	.051	-1.181
70	811	-.143	.218	.598	-.985
70	905	-.613	.138	-.248	-1.552
70	906	-.618	.113	-.191	-1.055
70	907	-.751	.194	-.131	-1.562
70	908	-.596	.074	-.266	-.836
70	909	-.438	.050	-.256	-.639
70	910	-.980	.212	-.365	-1.907
70	911	-.513	.069	-.296	-.798
70	912	-.475	.123	-.017	-1.340
70	913	-.493	.083	-.202	-.911
70	915	-.599	.095	-.250	-1.056
80	101	-.366	.101	-.002	-1.067
80	102	-.366	.102	.062	-1.080
80	103	-.570	.117	-.191	-.994
80	104	-.521	.125	-.121	-.928
80	105	-.369	.066	-.167	-.807
80	106	-.370	.069	-.086	-.703
80	107	-.370	.073	-.101	-1.017
80	108	-.352	.068	-.105	-.855
80	109	-.361	.072	-.110	-.787
80	110	-.345	.058	-.152	-.631
80	111	-.346	.059	-.155	-.616
80	112	-.348	.055	-.177	-.586
80	113	-.357	.053	-.157	-.568
80	114	-.349	.053	-.205	-.631
80	115	-.368	.059	-.168	-.653
80	116	-.333	.053	-.172	-.826
80	117	-.336	.052	-.163	-.586
80	118	-.355	.052	-.193	-.589
80	119	-.351	.053	-.174	-.552
80	120	-.367	.056	-.184	-.584
80	121	-.377	.055	-.212	-.582
80	122	-.401	.061	-.237	-.739
80	123	-.385	.060	-.217	-.712
80	124	-.357	.055	-.175	-.769
80	125	-.351	.055	-.132	-.579
80	126	-.358	.055	-.153	-.558
80	127	-.379	.051	-.200	-.551
80	128	-.379	.055	-.229	-.612

APPENDIX A -- PRESSURE DATA: BASS BROTHERS BUILDING - PHASE I, DALLAS, TEXAS -- CONFIGURATION A

WD	TAP	CPMEAN	CPRMS	CPMAX	CPMIN
80	129	-.534	.064	-.353	-.846
80	130	-.417	.079	-.233	-.808
80	131	-.439	.084	-.244	-.920
80	133	-.421	.069	-.203	-.693
80	134	-.413	.069	-.198	-.685
80	135	-.410	.070	-.197	-.771
80	136	-.437	.077	-.226	-1.221
80	137	-.444	.083	-.242	-.965
80	139	-.532	.100	-.301	-1.180
80	140	-.405	.078	-.201	-1.113
80	141	-.408	.077	-.213	-1.032
80	142	-.407	.075	-.190	-.728
80	143	-.400	.079	-.174	-.809
80	144	-.410	.084	-.201	-.876
80	145	-.407	.083	-.213	-.924
80	146	-.381	.082	-.116	-.976
80	147	-.547	.099	-.223	-1.155
80	148	-.620	.127	-.180	-1.407
80	149	-.555	.132	-.207	-1.197
80	150	-.550	.114	-.148	-1.227
80	151	-.589	.110	-.304	-1.172
80	152	-.322	.072	-.078	-.695
80	153	-.387	.077	-.158	-.758
80	154	-.246	.078	.127	-.550
80	155	-.411	.097	-.093	-.867
80	156	-.729	.183	-.186	-2.060
80	157	-.530	.115	-.224	-1.184
80	158	-.599	.098	-.352	-1.114
80	159	-.330	.076	-.016	-.756
80	160	-.112	.096	.270	-.551
80	161	-.572	.093	-.232	-1.113
80	162	-.831	.254	-.158	-2.026
80	163	-.698	.159	-.237	-1.561
80	164	-.510	.068	-.260	-.771
80	165	-.512	.069	-.260	-.759
80	166	-.908	.166	-.372	-1.665
80	167	-.661	.149	-.258	-1.291
80	168	-.497	.066	-.245	-.794
80	169	-.495	.062	-.191	-.728
80	170	-.454	.065	-.200	-.733
80	171	-.594	.070	-.371	-.962
80	201	-.218	.288	.869	-1.177
80	202	-.132	.402	1.267	-1.312
80	203	-.252	.203	.690	-1.129
80	204	.026	.177	.812	-.563
80	205	.139	.158	.925	-.452
80	206	.141	.150	.726	-.411
80	207	.030	.105	.516	-.327
80	208	-.059	.236	.540	-1.531
80	209	.333	.202	.971	-.562

WD	TAP	CPMEAN	CPRMS	CPMAX	CPMIN
80	210	.363	.180	.925	-.400
80	211	.378	.173	.923	-.137
80	212	.418	.175	1.090	-.138
80	213	.436	.166	1.005	-.056
80	214	-.371	.246	.533	-1.502
80	215	.264	.212	1.043	-.358
80	216	.393	.177	1.066	-.176
80	217	.428	.190	1.238	-.341
80	218	.433	.197	1.235	-.503
80	219	.421	.174	1.145	-.403
80	220	.230	.128	.927	-.350
80	221	.078	.105	.709	-.406
80	222	-.227	.268	.558	-1.388
80	223	.199	.214	.959	-.836
80	224	.294	.194	.882	-.513
80	225	.330	.180	.962	-.502
80	225	.330	.180	.962	-.502
80	226	.369	.166	1.120	-.348
80	227	.348	.158	.914	-.312
80	228	.154	.120	.721	-.436
80	229	-.002	.097	.521	-.630
80	230	-.132	.191	.506	-1.450
80	232	.049	.105	.657	-.258
80	233	.022	.162	.602	-.738
80	234	.127	.154	.862	-.906
80	235	.208	.143	.836	-.289
80	236	.258	.128	1.155	-.124
80	237	.113	.116	.659	-.224
80	239	.050	.091	.608	-.270
80	240	-.083	.079	.282	-.326
80	241	.002	.173	.750	-.997
80	242	-.058	.185	.721	-.809
80	243	.087	.152	.701	-.766
80	244	.216	.132	.777	-.282
80	245	.231	.115	.877	-.058
80	249	.026	.170	.840	-.839
80	250	-.325	.080	.200	-.645
80	252	-.295	.088	.133	-.604
80	253	-.326	.094	.027	-.713
80	254	-.004	.111	.600	-.417
80	255	.156	.098	.664	-.347
80	256	.129	.114	.628	-.174
80	257	.052	.105	.513	-.461
80	258	-.123	.078	.199	-.585
80	259	-.262	.060	-.070	-.512
80	260	-.141	.078	.142	-.659
80	261	-.417	.095	.050	-.810
80	262	-.380	.104	.012	-.902
80	263	-.197	.154	.277	-1.284
80	264	-.398	.092	-.001	-.878

WD	TAP	CPMEAN	CPRMS	CPMAX	CPMIN
80	265	-.052	.090	.346	-.343
80	266	-.024	.083	.358	-.256
80	267	-.128	.076	.216	-.373
80	268	-.195	.076	.051	-.494
80	269	-.254	.081	.086	-.617
80	270	-.452	.096	-.125	-.890
80	271	.042	.192	.974	-.734
80	272	.257	.148	.796	-.348
80	273	-.186	.108	.261	-.753
80	280	.139	.113	.634	-.248
80	301	-.646	.163	.164	-1.488
80	302	-.482	.185	.205	-1.354
80	303	-.270	.152	.281	-.819
80	304	-.154	.170	.560	-.838
80	305	-.163	.222	.633	-.996
80	306	.070	.141	.715	-.415
80	307	.197	.159	.826	-.307
80	308	-.871	.221	-.164	-2.053
80	309	-.233	.213	.590	-.949
80	310	-.440	.135	.066	-.964
80	311	-.598	.155	-.067	-1.490
80	312	-.823	.191	-.220	-1.789
80	313	-.496	.152	.161	-1.152
80	314	-.496	.133	.082	-.985
80	315	-.493	.147	.260	-1.199
80	316	-.563	.228	.472	-1.535
80	317	-.442	.113	-.048	-.982
80	318	-.745	.179	-.078	-1.496
80	319	-.493	.201	.043	-1.648
80	320	-.529	.176	.103	-1.557
80	321	-.532	.145	-.048	-1.091
80	322	-.527	.135	-.095	-1.152
80	323	-.553	.155	-.119	-1.396
80	324	-.464	.121	.120	-1.091
80	325	-.450	.131	.079	-1.044
80	326	-.485	.174	.250	-1.464
80	327	-.654	.175	-.016	-1.397
80	328	-.565	.146	-.127	-1.329
80	329	-.572	.144	-.126	-1.203
80	330	-.575	.144	-.157	-1.275
80	331	-.442	.116	-.043	-1.183
80	332	-.438	.107	.065	-.999
80	333	-.447	.094	-.006	-.992
80	334	-.453	.093	-.123	-.994
80	335	-.492	.097	-.151	-1.037
80	336	-.501	.097	-.256	-1.254
80	337	-.492	.093	-.225	-1.006
80	338	-.473	.091	-.203	-1.020
80	339	-.457	.094	-.192	-1.176
80	340	-.424	.111	-.023	-1.069

APPENDIX A -- PRESSURE DATA: BASS BROTHERS BUILDING - PHASE I, DALLAS, TEXAS -- CONFIGURATION A

WD	TAP	CPMEAN	CPRMS	CPMAX	CPMIN
80	341	-.433	.107	.012	-1.032
80	342	-.415	.080	.003	-.866
80	343	-.408	.078	-.008	-.831
80	344	-.467	.081	-.198	-.976
80	345	-.472	.084	-.196	-1.080
80	346	-.446	.081	-.224	-1.038
80	347	-.445	.084	-.185	-.980
80	348	-.439	.084	-.151	-.791
80	349	-.400	.114	.072	-.970
80	350	-.394	.142	.303	-1.446
80	352	-.404	.110	.227	-.786
80	353	-.487	.109	-.182	-1.066
80	354	-.485	.112	-.201	-1.047
80	355	-.490	.112	-.213	-1.081
80	359	-.344	.090	-.002	-.871
80	360	-.457	.089	-.012	-.860
80	361	-.470	.113	.132	-.938
80	362	-.509	.114	-.085	-1.096
80	363	-.507	.116	-.072	-1.192
80	364	-.510	.110	-.124	-1.067
80	365	-.641	.127	-.355	-1.232
80	366	-.770	.211	-.115	-1.651
80	367	-.557	.129	-.211	-1.081
80	368	-.598	.104	-.194	-.974
80	369	-.411	.114	.217	-.784
80	370	-.402	.079	.088	-.700
80	371	-.502	.110	-.039	-.983
80	372	-.492	.093	-.119	-.850
80	373	-.592	.102	-.315	-1.563
80	374	-.409	.098	-.037	-.952
80	375	-.409	.083	.050	-.663
80	376	-.497	.117	-.104	-1.061
80	377	-.546	.163	.238	-1.200
80	378	-.569	.129	.089	-1.104
80	379	-.651	.095	-.248	-1.006
80	380	-.661	.097	-.370	-1.125
80	381	-.505	.105	-.122	-1.033
80	382	-.629	.097	-.358	-1.121
80	383	-.560	.078	-.286	-.908
80	384	-.773	.157	-.300	-1.642
80	385	-.722	.120	-.407	-1.337
80	386	-.566	.114	-.224	-1.370
80	387	-.698	.125	-.276	-1.488
80	388	-.775	.140	-.391	-1.655
80	389	-.665	.109	-.370	-1.245
80	390	-.643	.108	-.291	-1.059
80	391	-.794	.115	-.444	-1.298
80	392	-.704	.111	-.384	-1.163
80	393	-.680	.186	.094	-1.539
80	401	-.364	.078	-.118	-.744

WD	TAP	CPMEAN	CPRMS	CPMAX	CPMIN
80	402	-.369	.075	-.121	-.763
80	403	-.537	.081	-.312	-.946
80	404	-.591	.134	-.311	-1.594
80	405	-.419	.096	-.150	-.898
80	406	-.518	.106	-.202	-1.069
80	407	-.410	.100	-.105	-.924
80	408	-.556	.087	-.315	-.941
80	409	-.562	.084	-.323	-.972
80	410	-.614	.083	-.378	-1.025
80	411	-.554	.066	-.360	-.834
80	412	-.533	.099	-.141	-1.004
80	413	-.590	.119	-.157	-1.126
80	414	-.444	.118	-.066	-.968
80	415	-.717	.135	-.384	-1.498
80	416	-.375	.068	-.168	-.891
80	417	-.387	.076	-.139	-.819
80	418	-.404	.092	-.121	-.832
80	419	-.475	.131	-.072	-1.225
80	420	-.465	.125	-.154	-1.288
80	421	-.568	.104	-.263	-1.287
80	422	-.556	.109	-.219	-1.168
80	423	-.596	.121	-.214	-1.302
80	424	-.377	.057	-.189	-.743
80	425	-.363	.055	-.151	-.644
80	426	-.367	.055	-.119	-.617
80	427	-.364	.049	-.214	-.705
80	428	-.370	.054	-.199	-.719
80	429	-.610	.087	-.350	-1.050
80	430	-.408	.088	-.199	-1.032
80	431	-.451	.120	-.161	-1.195
80	432	-.457	.126	-.151	-1.313
80	433	-.376	.052	-.208	-.626
80	434	-.354	.047	-.143	-.513
80	435	-.354	.046	-.156	-.520
80	436	-.342	.042	-.182	-.493
80	437	-.353	.043	-.192	-.516
80	438	-.370	.047	-.216	-.617
80	439	-.541	.059	-.353	-.915
80	440	-.393	.067	-.184	-.868
80	441	-.393	.076	-.110	-.920
80	442	-.523	.062	-.316	-.777
80	443	-.405	.074	-.171	-1.081
80	444	-.403	.074	-.158	-.892
80	445	-.359	.051	-.183	-.566
80	446	-.371	.057	-.182	-.662
80	447	-.401	.072	-.124	-.871
80	449	-.432	.060	-.209	-.761
80	450	-.321	.045	-.116	-.497
80	451	-.477	.047	-.307	-.648
80	452	-.497	.074	-.266	-.908

WD	TAP	CPMEAN	CPRMS	CPMAX	CPMIN
80	453	-.558	.107	-.267	-1.216
80	454	-.359	.065	-.159	-.731
80	455	-.453	.059	-.199	-.685
80	456	-.323	.050	-.123	-.555
80	457	-.318	.046	-.115	-.503
80	458	-.318	.044	-.122	-.482
80	459	-.358	.082	-.159	-.846
80	460	-.392	.072	-.183	-.794
80	461	-.475	.077	-.253	-1.091
80	462	-.355	.066	-.114	-.825
80	463	-.317	.059	-.042	-.505
80	464	-.431	.044	-.277	-.599
80	465	-.546	.061	-.289	-.784
80	466	-.343	.061	-.147	-.642
80	467	-.321	.059	.050	-.543
80	468	-.324	.055	-.055	-.516
80	469	-.514	.060	-.207	-.787
80	470	-.351	.063	-.118	-.653
80	471	-.381	.086	-.090	-.936
80	472	-.582	.071	-.287	-.834
80	473	-.502	.067	-.260	-.883
80	474	-.577	.063	-.316	-.862
80	475	-.525	.061	-.219	-.881
80	476	-.486	.061	-.220	-.727
80	477	-.459	.063	-.238	-.746
80	478	-.503	.075	-.259	-.969
80	479	-.555	.066	-.261	-.847
80	480	-.499	.059	-.240	-.689
80	481	-.571	.063	-.339	-.891
80	482	-.514	.062	-.278	-.858
80	483	-.506	.057	-.325	-.711
80	484	-.525	.081	-.219	-.979
80	702	-.346	.044	-.184	-.507
80	703	-.360	.052	-.175	-.583
80	704	-.509	.078	-.275	-.848
80	801	-.368	.100	.036	-.810
80	802	-.330	.105	.127	-.706
80	803	-.456	.090	-.162	-.812
80	804	-.599	.128	-.083	-1.167
80	805	-.804	.283	.058	-2.011
80	806	-.488	.142	.100	-1.048
80	807	-.506	.150	.440	-1.102
80	808	-.402	.157	.078	-1.123
80	809	-.412	.232	.539	-1.389
80	810	-.417	.170	.348	-1.098
80	811	.020	.216	.843	-.753
80	905	-.566	.116	-.196	-1.346
80	906	-.536	.108	-.149	-.971
80	907	-.759	.179	-.230	-1.449
80	908	-.562	.069	-.274	-.821

APPENDIX A -- PRESSURE DATA: BASS BROTHERS BUILDING - PHASE I, DALLAS, TEXAS -- CONFIGURATION A

WD	TAP	CPMEAN	CPRMS	CPMAX	CPMIN
80	909	-.421	.042	-.282	-.614
80	910	-.944	.190	-.330	-1.746
80	911	-.467	.053	-.263	-.685
80	912	-.441	.106	.064	-.858
80	913	-.467	.080	-.178	-.853
80	915	-.537	.080	-.277	-1.128
90	101	-.316	.127	.132	-.839
90	102	-.339	.116	-.021	-.962
90	103	-.399	.191	.175	-1.232
90	104	-.380	.165	.090	-1.548
90	105	-.342	.123	.058	-.999
90	106	-.335	.132	.050	-1.196
90	107	-.356	.147	.007	-1.901
90	108	-.324	.102	-.017	-1.006
90	109	-.322	.109	-.034	-1.097
90	110	-.367	.146	.022	-1.466
90	111	-.341	.130	.018	-1.107
90	112	-.323	.115	.019	-1.004
90	113	-.347	.106	-.000	-.874
90	114	-.327	.096	-.041	-.807
90	115	-.323	.096	-.004	-.783
90	116	-.322	.126	-.031	-1.408
90	117	-.282	.093	.010	-1.020
90	118	-.320	.082	-.039	-.752
90	119	-.303	.075	-.069	-.733
90	120	-.301	.075	-.078	-.770
90	121	-.296	.066	-.099	-.599
90	122	-.350	.075	-.164	-.777
90	123	-.334	.080	-.139	-.757
90	124	-.328	.089	-.036	-1.137
90	125	-.282	.061	-.061	-.777
90	126	-.297	.056	-.076	-.599
90	127	-.323	.049	-.140	-.556
90	128	-.318	.055	-.129	-.604
90	129	-.446	.059	-.260	-.770
90	130	-.319	.058	-.157	-.562
90	131	-.365	.069	-.179	-.767
90	133	-.353	.065	-.166	-.637
90	134	-.355	.064	-.162	-.653
90	135	-.358	.065	-.153	-.717
90	136	-.359	.066	-.175	-.819
90	137	-.367	.065	-.190	-.708
90	139	-.465	.064	-.295	-.774
90	140	-.344	.066	-.143	-.698
90	141	-.349	.067	-.148	-.654
90	142	-.338	.064	-.168	-.615
90	143	-.339	.066	-.166	-.618
90	144	-.356	.074	-.159	-.923
90	145	-.357	.071	-.159	-.784
90	146	-.313	.063	-.116	-.661
90	147	-.487	.071	-.263	-.797
90	148	-.535	.128	-.198	-1.428
90	149	-.464	.100	-.137	-1.068
90	150	-.464	.094	-.201	-1.143
90	151	-.507	.095	-.263	-1.178
90	152	-.280	.059	-.123	-.627
90	153	-.323	.063	-.150	-.789
90	154	-.234	.052	-.008	-.484
90	155	-.317	.072	-.118	-.675
90	156	-.529	.105	-.242	-1.216
90	157	-.463	.089	-.189	-.906
90	158	-.448	.078	-.190	-.811
90	159	-.334	.067	-.069	-.712
90	160	-.172	.064	.100	-.487
90	161	-.514	.087	-.240	-.887
90	162	-.575	.201	-.062	-1.409
90	163	-.488	.145	-.093	-1.074
90	164	-.407	.067	-.206	-.681
90	165	-.426	.069	-.222	-.710
90	166	-.687	.176	-.227	-1.392
90	167	-.498	.127	-.198	-1.091
90	168	-.413	.057	-.182	-.650
90	169	-.424	.059	-.237	-.662
90	170	-.426	.053	-.242	-.596
90	171	-.442	.059	-.238	-.701
90	201	-.313	.136	.543	-.804
90	202	-.343	.163	.550	-1.122
90	203	-.431	.094	.005	-1.001
90	204	-.389	.154	.477	-1.465
90	205	-.174	.267	.857	-1.362
90	206	-.091	.266	.855	-1.026
90	207	-.080	.255	.652	-.913
90	208	-.435	.094	-.043	-1.057
90	209	-.339	.126	.442	-.686
90	210	-.272	.155	.547	-.720
90	211	-.211	.191	.664	-1.046
90	212	-.219	.245	.656	-.862
90	213	-.054	.296	1.072	-.893
90	214	-.585	.087	-.170	-1.144
90	215	-.361	.134	-.278	-.390
90	216	-.208	.177	.627	-.637
90	217	-.093	.213	.786	-.662
90	218	-.138	.267	.871	-1.029
90	219	-.048	.299	.977	-.831
90	220	.036	.268	.866	-.946
90	221	-.012	.230	.779	-.921
90	222	-.499	.162	.160	-1.328
90	223	-.317	.203	.993	-.854
90	224	-.099	.233	.999	-.640
90	225	-.042	.245	1.057	-.743
90	225	-.042	.245	1.057	-.743
90	226	.076	.269	1.240	-.669
90	227	.158	.245	.931	-.785
90	228	.150	.189	.885	-.706
90	229	.032	.159	.624	-.905
90	230	-.405	.225	.600	-1.332
90	232	.121	.149	.878	-.463
90	233	-.136	.211	.664	-.967
90	234	.011	.166	.648	-.459
90	235	.101	.157	.737	-.423
90	236	.254	.146	.829	-.263
90	237	.164	.162	.825	-.453
90	239	.088	.106	.618	-.262
90	240	-.030	.093	.487	-.289
90	241	-.174	.149	.503	-.644
90	242	-.232	.158	.557	-.798
90	243	-.083	.187	.550	-.720
90	244	.060	.169	.659	-.514
90	245	.222	.147	.780	-.315
90	249	-.273	.174	.369	-.800
90	250	-.177	.094	.278	-.544
90	252	-.310	.074	.029	-.642
90	253	-.420	.077	-.077	-.710
90	254	-.174	.105	.331	-.533
90	255	-.036	.109	.491	-.355
90	256	.023	.116	.731	-.398
90	257	-.019	.118	.605	-.458
90	258	-.139	.081	.241	-.408
90	259	-.263	.052	-.024	-.492
90	260	-.194	.067	.078	-.483
90	261	-.369	.076	-.127	-.746
90	262	-.509	.089	-.162	-.932
90	263	-.465	.157	.000	-1.248
90	264	-.422	.084	-.076	-.832
90	265	-.189	.092	.224	-.489
90	266	-.131	.078	.144	-.388
90	267	-.199	.075	.114	-.484
90	268	-.281	.072	.022	-.583
90	269	-.303	.069	-.012	-.690
90	270	-.445	.061	-.212	-.639
90	271	-.200	.180	.545	-.701
90	272	-.020	.154	.531	-.451
90	273	-.229	.103	.158	-.617
90	280	.020	.119	.660	-.480
90	301	-.472	.149	.418	-1.152
90	302	-.337	.116	.140	-1.246
90	303	-.373	.116	.181	-1.056
90	304	-.341	.108	.352	-.958
90	305	-.348	.115	.289	-.861
90	306	-.273	.253	.583	-1.186

APPENDIX A -- PRESSURE DATA: BASS BROTHERS BUILDING - PHASE I, DALLAS, TEXAS -- CONFIGURATION A

WD	TAP	CPMEAN	CPRMS	CPMAX	CPMIN
90	307	-.236	.316	.927	-1.689
90	308	-.564	.092	-.217	-1.148
90	309	-.328	.121	.360	-.911
90	310	-.365	.094	.252	-.691
90	311	-.378	.076	-.113	-.855
90	312	-.536	.081	-.295	-.951
90	313	-.358	.095	-.058	-.876
90	314	-.458	.087	-.153	-.823
90	315	-.477	.087	-.124	-.832
90	316	-.519	.106	-.112	-1.217
90	317	-.380	.073	-.083	-.875
90	318	-.512	.076	-.139	-1.146
90	319	-.372	.087	.046	-1.079
90	320	-.389	.083	.129	-1.046
90	321	-.378	.071	.050	-.883
90	322	-.451	.069	-.235	-.910
90	323	-.413	.071	-.225	-.811
90	324	-.400	.092	-.031	-1.055
90	325	-.404	.083	-.057	-.732
90	326	-.381	.078	-.103	-1.024
90	327	-.516	.075	-.196	-.935
90	328	-.436	.101	-.097	-.932
90	329	-.512	.116	-.147	-1.044
90	330	-.509	.108	-.136	-1.055
90	331	-.438	.108	-.043	-1.091
90	332	-.420	.097	-.072	-1.230
90	333	-.407	.075	-.050	-.863
90	334	-.395	.072	-.091	-.730
90	335	-.413	.064	-.131	-.680
90	336	-.420	.061	-.190	-.692
90	337	-.430	.061	-.244	-.650
90	338	-.432	.066	-.245	-.726
90	339	-.431	.071	-.200	-.730
90	340	-.373	.109	.122	-1.116
90	341	-.380	.104	.207	-.989
90	342	-.354	.091	.196	-.821
90	343	-.351	.094	.048	-.665
90	344	-.407	.085	-.057	-.829
90	345	-.475	.089	-.124	-.868
90	346	-.470	.090	-.181	-.948
90	347	-.472	.096	-.162	-.915
90	348	-.453	.104	-.153	-1.222
90	349	-.317	.130	.212	-1.020
90	350	-.267	.148	.329	-.957
90	352	-.244	.140	.327	-.686
90	353	-.503	.114	-.012	-1.122
90	354	-.502	.111	-.090	-1.112
90	355	-.518	.114	-.020	-1.176
90	359	-.259	.092	.232	-.687
90	360	-.378	.091	.139	-.693

WD	TAP	CPMEAN	CPRMS	CPMAX	CPMIN
90	361	-.295	.143	.343	-.704
90	362	-.365	.129	.184	-.809
90	363	-.415	.117	.182	-.832
90	364	-.425	.110	-.025	-.893
90	365	-.531	.096	-.293	-1.035
90	366	-.735	.182	-.148	-1.705
90	367	-.408	.105	-.088	-.940
90	368	-.442	.114	.026	-.824
90	369	-.234	.116	.279	-.571
90	370	-.238	.099	.252	-.547
90	371	-.376	.141	.226	-.982
90	372	-.363	.105	.139	-.861
90	373	-.478	.087	-.168	-1.039
90	374	-.254	.095	.231	-.547
90	375	-.236	.095	.242	-.487
90	376	-.465	.120	.065	-1.119
90	377	-.493	.114	.153	-.912
90	378	-.469	.096	.152	-1.134
90	379	-.455	.084	.095	-.804
90	380	-.506	.091	-.064	-.885
90	381	-.328	.088	.177	-.691
90	382	-.531	.088	-.260	-.937
90	383	-.467	.101	.000	-.817
90	384	-.577	.128	.153	-1.079
90	385	-.582	.099	-.256	-1.053
90	386	-.474	.128	.025	-1.095
90	387	-.598	.108	-.285	-1.229
90	388	-.633	.129	-.262	-1.409
90	389	-.450	.091	.082	-1.062
90	390	-.488	.095	-.217	-.927
90	391	-.541	.118	-.203	-1.131
90	392	-.586	.101	-.245	-1.074
90	393	-.736	.163	-.259	-1.410
90	401	-.307	.097	-.016	-.825
90	402	-.345	.096	-.044	-.826
90	403	-.465	.090	-.204	-1.043
90	404	-.466	.080	-.237	-.913
90	405	-.315	.081	-.039	-.681
90	406	-.439	.095	-.129	-.984
90	407	-.347	.092	-.048	-.982
90	408	-.468	.103	-.177	-1.163
90	409	-.477	.096	-.191	-.975
90	410	-.450	.091	-.166	-.915
90	411	-.442	.060	-.268	-.868
90	412	-.438	.072	-.178	-.879
90	413	-.486	.082	-.217	-1.100
90	414	-.315	.076	-.062	-.730
90	415	-.502	.080	-.235	-.997
90	416	-.304	.057	-.130	-.613
90	417	-.311	.056	-.116	-.547

WD	TAP	CPMEAN	CPRMS	CPMAX	CPMIN
90	418	-.313	.062	-.109	-.558
90	419	-.368	.070	-.094	-.772
90	420	-.370	.071	-.165	-.753
90	421	-.430	.059	-.257	-.855
90	422	-.418	.062	-.237	-.820
90	423	-.464	.074	-.255	-.804
90	424	-.318	.056	-.124	-.718
90	425	-.307	.047	-.140	-.547
90	426	-.314	.045	-.164	-.559
90	427	-.301	.042	-.147	-.468
90	428	-.315	.043	-.140	-.544
90	429	-.452	.043	-.319	-.611
90	430	-.346	.052	-.167	-.648
90	431	-.360	.059	-.128	-.847
90	432	-.384	.069	-.116	-1.020
90	433	-.323	.057	-.131	-.640
90	434	-.311	.049	-.115	-.681
90	435	-.300	.048	-.073	-.549
90	436	-.298	.048	-.038	-.533
90	437	-.310	.051	-.068	-.578
90	438	-.341	.061	-.097	-.809
90	439	-.486	.060	-.275	-.829
90	440	-.373	.074	-.098	-1.033
90	441	-.383	.080	-.083	-.958
90	442	-.495	.069	-.253	-.817
90	443	-.393	.088	-.006	-.732
90	444	-.360	.083	-.070	-.778
90	445	-.327	.062	-.120	-.612
90	446	-.341	.066	-.137	-.653
90	447	-.359	.083	-.135	-.797
90	449	-.410	.050	-.223	-.638
90	450	-.277	.049	-.056	-.487
90	451	-.439	.050	-.227	-.600
90	452	-.436	.092	.009	-.855
90	453	-.477	.119	-.104	-1.322
90	454	-.322	.060	-.125	-.566
90	455	-.425	.054	-.219	-.647
90	456	-.270	.050	.013	-.457
90	457	-.280	.050	-.043	-.436
90	458	-.269	.051	-.032	-.457
90	459	-.320	.089	.043	-.875
90	460	-.349	.083	-.104	-.881
90	461	-.407	.104	.019	-1.221
90	462	-.314	.058	-.048	-.547
90	463	-.285	.053	-.048	-.466
90	464	-.384	.054	-.117	-.559
90	465	-.436	.065	-.217	-.831
90	466	-.309	.053	-.155	-.589
90	467	-.275	.057	-.076	-.511
90	468	-.298	.051	-.127	-.493

APPENDIX A -- PRESSURE DATA: BASS BROTHERS BUILDING - PHASE I, DALLAS, TEXAS -- CONFIGURATION A

WD	TAP	CPMEAN	CPRMS	CPMAX	CPMIN
90	469	-.467	.050	-.299	-.702
90	470	-.243	.080	.162	-.571
90	471	-.225	.114	.260	-.679
90	472	-.461	.055	-.315	-.725
90	473	-.465	.064	-.261	-.778
90	474	-.441	.050	-.281	-.633
90	475	-.467	.052	-.230	-.683
90	476	-.433	.072	-.116	-.713
90	477	-.338	.085	.082	-.581
90	478	-.368	.082	-.015	-.596
90	479	-.413	.058	-.199	-.662
90	480	-.442	.060	-.209	-.642
90	481	-.424	.081	-.009	-.669
90	482	-.428	.072	-.079	-.679
90	483	-.440	.065	-.204	-.763
90	484	-.324	.114	.103	-.773
90	702	-.275	.049	-.093	-.507
90	703	-.295	.052	-.096	-.568
90	704	-.454	.072	-.231	-.800
90	801	-.259	.125	.266	-.731
90	802	-.225	.141	.394	-.948
90	803	-.407	.223	.279	-1.291
90	804	-.353	.158	.304	-1.037
90	805	-.453	.250	.432	-1.853
90	806	-.297	.139	.311	-1.043
90	807	-.313	.131	.533	-.881
90	808	-.337	.120	.191	-.816
90	809	-.444	.129	.198	-1.179
90	810	-.375	.096	.184	-1.037
90	811	-.257	.141	.487	-.704
90	905	-.518	.084	-.258	-.973
90	906	-.428	.089	-.116	-.829
90	907	-.555	.162	-.179	-1.229
90	908	-.423	.065	-.197	-.662
90	909	-.371	.049	-.173	-.518
90	910	-.787	.189	-.307	-1.715
90	911	-.417	.055	-.148	-.587
90	912	-.356	.084	.011	-.750
90	913	-.438	.069	-.134	-.698
90	915	-.460	.097	-.061	-.939
100	101	-.280	.114	.111	-.933
100	102	-.300	.112	.010	-1.168
100	103	-.350	.149	.165	-1.365
100	104	-.336	.136	.169	-1.137
100	105	-.312	.115	.081	-.883
100	106	-.303	.103	.088	-.824
100	107	-.282	.096	.145	-.783
100	108	-.276	.094	.048	-.850
100	109	-.299	.100	.047	-1.003
100	110	-.343	.140	.159	-1.041

WD	TAP	CPMEAN	CPRMS	CPMAX	CPMIN
100	111	-.318	.118	.081	-.886
100	112	-.300	.102	.060	-.826
100	113	-.277	.087	.076	-.687
100	114	-.265	.075	-.033	-.670
100	115	-.263	.066	-.038	-.592
100	116	-.317	.140	.113	-1.067
100	117	-.262	.104	.088	-.835
100	118	-.262	.091	.038	-.773
100	119	-.248	.075	.005	-.540
100	120	-.258	.072	-.037	-.611
100	121	-.244	.060	-.078	-.494
100	122	-.261	.056	-.103	-.790
100	123	-.262	.065	-.099	-.866
100	124	-.303	.127	.086	-1.342
100	125	-.274	.095	.049	-1.055
100	126	-.256	.081	.048	-.821
100	127	-.267	.060	-.034	-.594
100	128	-.272	.064	-.082	-.599
100	129	-.383	.059	-.204	-.718
100	130	-.264	.053	-.125	-.494
100	131	-.282	.058	-.120	-.603
100	133	-.362	.079	-.162	-.795
100	134	-.358	.078	-.165	-.994
100	135	-.347	.077	-.154	-.801
100	136	-.318	.064	-.150	-.749
100	137	-.273	.049	-.127	-.574
100	139	-.371	.056	-.200	-.732
100	140	-.361	.100	-.151	-1.042
100	141	-.352	.097	-.131	-1.111
100	142	-.362	.098	-.150	-.974
100	143	-.340	.088	-.148	-.881
100	144	-.292	.061	-.073	-.568
100	145	-.243	.046	-.053	-.501
100	146	-.238	.047	-.052	-.473
100	147	-.382	.062	-.176	-.753
100	148	-.438	.143	-.166	-1.119
100	149	-.374	.099	-.137	-.974
100	150	-.471	.105	-.207	-1.027
100	151	-.439	.070	-.239	-.793
100	152	-.218	.043	-.043	-.450
100	153	-.231	.045	-.101	-.498
100	154	-.205	.051	.024	-.486
100	155	-.217	.054	-.065	-.700
100	156	-.390	.099	-.165	-1.248
100	157	-.414	.057	-.254	-.782
100	158	-.375	.052	-.212	-.701
100	159	-.362	.059	-.160	-.637
100	160	-.215	.062	.048	-.513
100	161	-.363	.063	-.175	-.678
100	162	-.379	.066	-.138	-.829

WD	TAP	CPMEAN	CPRMS	CPMAX	CPMIN
100	163	-.356	.060	-.155	-.785
100	164	-.355	.057	-.101	-.706
100	165	-.328	.058	-.053	-.720
100	166	-.438	.083	-.249	-.994
100	167	-.358	.058	-.156	-.874
100	168	-.358	.048	-.170	-.610
100	169	-.330	.056	-.138	-.708
100	170	-.299	.059	-.069	-.569
100	171	-.309	.066	-.098	-.661
100	201	-.335	.158	.560	-.977
100	202	-.422	.126	.145	-1.065
100	203	-.433	.081	-.026	-.866
100	204	-.426	.102	-.063	-1.084
100	205	-.412	.162	.371	-1.737
100	206	-.314	.192	.483	-1.077
100	207	-.303	.204	.541	-1.076
100	208	-.424	.071	-.103	-.736
100	209	-.417	.075	-.110	-.807
100	210	-.394	.081	-.059	-.872
100	211	-.383	.091	-.008	-1.098
100	212	-.410	.115	.111	-1.074
100	213	-.382	.147	.280	-.937
100	214	-.609	.065	-.417	-.926
100	215	-.406	.071	-.136	-.650
100	216	-.392	.086	.052	-.744
100	217	-.341	.101	.154	-.716
100	218	-.397	.121	.160	-.870
100	219	-.360	.155	.506	-.949
100	220	-.279	.207	.612	-1.359
100	221	-.271	.214	.510	-1.562
100	222	-.446	.089	-.003	-1.038
100	223	-.513	.104	.186	-.938
100	224	-.376	.137	.337	-.871
100	225	-.406	.145	.242	-.873
100	225	-.406	.145	.242	-.873
100	226	-.289	.184	.534	-.887
100	227	-.160	.212	.823	-.929
100	228	-.080	.206	.786	-.778
100	229	-.117	.183	.741	-.778
100	230	-.548	.147	.154	-1.166
100	232	.024	.174	.799	-.571
100	233	-.437	.145	.482	-1.158
100	234	-.259	.141	.350	-1.218
100	235	-.182	.132	.689	-.593
100	236	.052	.174	.763	-.545
100	237	.017	.180	.713	-.601
100	239	.047	.119	.538	-.421
100	240	-.046	.103	.359	-.388
100	241	-.298	.097	.066	-.814
100	242	-.324	.111	.208	-.973

APPENDIX A -- PRESSURE DATA: BASS BROTHERS BUILDING - PHASE I, DALLAS, TEXAS -- CONFIGURATION A

WD	TAP	CPMEAN	CPRMS	CPMAX	CPMIN
100	243	-.373	.144	.477	-.767
100	244	-.244	.126	.566	-.647
100	245	-.038	.170	.792	-.538
100	249	-.482	.107	.018	-.954
100	250	-.214	.113	.270	-.691
100	252	-.279	.118	.034	-.991
100	253	-.411	.134	.082	-1.254
100	254	-.264	.079	-.003	-.661
100	255	-.240	.072	.071	-.525
100	256	-.209	.124	.398	-.744
100	257	-.263	.127	.363	-.719
100	258	-.241	.090	.168	-.562
100	259	-.211	.072	.088	-.522
100	260	-.203	.070	.026	-.524
100	261	-.275	.100	.094	-.647
100	262	-.451	.095	-.190	-.938
100	263	-.461	.107	-.135	-.935
100	264	-.350	.118	.010	-1.139
100	265	-.305	.080	-.053	-.820
100	266	-.318	.055	-.138	-.680
100	267	-.328	.069	-.054	-1.020
100	268	-.365	.072	-.103	-.875
100	269	-.308	.064	-.099	-.636
100	270	-.278	.075	.064	-.543
100	271	-.309	.075	.003	-.807
100	272	-.281	.072	.119	-.519
100	273	-.313	.072	-.015	-.663
100	280	-.240	.115	.285	-.793
100	301	-.415	.191	.532	-1.276
100	302	-.323	.150	.371	-1.108
100	303	-.332	.143	.411	-1.113
100	304	-.329	.140	.440	-.866
100	305	-.355	.141	.510	-1.048
100	306	-.429	.153	.344	-1.182
100	307	-.442	.183	.333	-1.341
100	308	-.616	.103	-.117	-1.189
100	309	-.275	.155	.626	-.787
100	310	-.333	.116	.363	-.713
100	311	-.400	.084	-.108	-.885
100	312	-.588	.092	-.275	-.960
100	313	-.354	.129	.314	-.915
100	314	-.460	.119	.294	-.974
100	315	-.478	.112	.182	-1.016
100	316	-.521	.141	.074	-1.803
100	317	-.346	.117	.341	-.966
100	318	-.502	.114	.127	-1.094
100	319	-.364	.126	.579	-1.200
100	320	-.405	.114	.040	-1.072
100	321	-.372	.095	.065	-.882
100	322	-.483	.076	-.221	-.759
100	323	-.441	.084	-.153	-.875
100	324	-.349	.157	.606	-1.278
100	325	-.398	.138	.445	-1.283
100	326	-.379	.128	.323	-1.334
100	327	-.507	.108	-.012	-1.102
100	328	-.455	.140	-.035	-1.256
100	329	-.641	.166	-.175	-1.379
100	330	-.613	.152	-.172	-1.276
100	331	-.357	.163	.423	-1.098
100	332	-.377	.158	.344	-1.249
100	333	-.343	.120	.239	-1.382
100	334	-.323	.124	.281	-.853
100	335	-.381	.101	-.002	-.775
100	336	-.409	.084	-.101	-.757
100	337	-.427	.073	-.184	-.749
100	338	-.434	.063	-.246	-.751
100	339	-.438	.062	-.234	-.773
100	340	-.231	.171	.484	-.868
100	341	-.255	.171	.398	-.858
100	342	-.229	.135	.428	-.783
100	343	-.222	.143	.445	-.617
100	344	-.287	.110	.276	-.678
100	345	-.363	.088	.076	-.667
100	346	-.380	.075	-.074	-.668
100	347	-.416	.076	-.085	-.739
100	348	-.421	.082	-.126	-.727
100	349	-.195	.203	.504	-1.042
100	350	-.094	.223	.697	-.781
100	352	-.097	.184	.686	-.583
100	353	-.239	.141	.350	-.695
100	354	-.245	.140	.363	-.860
100	355	-.274	.131	.338	-.865
100	359	-.218	.117	.327	-.644
100	360	-.321	.106	.314	-.660
100	361	-.027	.175	.547	-.600
100	362	-.077	.157	.535	-.591
100	363	-.176	.156	.410	-.811
100	364	-.229	.151	.296	-.876
100	365	-.457	.144	.213	-.985
100	366	-.651	.163	-.102	-1.302
100	367	-.315	.136	.247	-.812
100	368	-.274	.106	.379	-.576
100	369	-.064	.132	.600	-.417
100	370	-.024	.150	.791	-.419
100	371	-.093	.144	.512	-.751
100	372	-.122	.147	.513	-.645
100	373	-.358	.151	.292	-.918
100	374	-.059	.115	.460	-.428
100	375	-.035	.146	.672	-.470
100	376	-.361	.110	.023	-.938
100	377	-.342	.125	.264	-.828
100	378	-.325	.129	.302	-.868
100	379	-.296	.102	.193	-.622
100	380	-.244	.130	.453	-.627
100	381	-.101	.132	.527	-.570
100	382	-.356	.162	.275	-1.318
100	383	-.337	.104	.008	-.965
100	384	-.245	.154	.522	-.753
100	385	-.375	.125	.208	-.825
100	386	-.321	.128	.120	-.933
100	387	-.419	.138	.203	-1.227
100	388	-.420	.100	.006	-.975
100	389	-.306	.111	.245	-.776
100	390	-.240	.090	.324	-.470
100	391	-.292	.076	.174	-.551
100	392	-.321	.090	-.046	-.975
100	393	-.342	.106	-.076	-.892
100	401	-.290	.099	-.038	-.896
100	402	-.290	.095	-.029	-.852
100	403	-.438	.113	-.125	-1.440
100	404	-.476	.112	-.121	-1.160
100	405	-.318	.106	.091	-1.187
100	406	-.452	.128	-.024	-1.364
100	407	-.349	.115	-.056	-1.062
100	408	-.445	.119	-.029	-1.334
100	409	-.451	.123	-.054	-1.900
100	410	-.420	.128	-.083	-1.894
100	411	-.429	.069	-.190	-.825
100	412	-.427	.102	-.066	-.997
100	413	-.483	.118	-.105	-1.177
100	414	-.315	.110	.093	-1.129
100	415	-.502	.119	-.140	-1.289
100	416	-.272	.068	.035	-.707
100	417	-.291	.075	.023	-.695
100	418	-.297	.084	-.002	-.706
100	419	-.331	.116	.150	-.937
100	420	-.349	.115	.074	-.997
100	421	-.413	.084	-.154	-1.024
100	422	-.405	.091	-.142	-1.244
100	423	-.444	.101	-.104	-1.260
100	424	-.272	.057	-.073	-.657
100	425	-.253	.058	-.033	-.507
100	426	-.259	.062	.229	-.528
100	427	-.257	.055	-.060	-.512
100	428	-.281	.067	-.075	-.750
100	429	-.437	.071	-.150	-.808
100	430	-.312	.094	.039	-1.063
100	431	-.326	.106	.040	-1.083
100	432	-.352	.115	.058	-1.055
100	433	-.260	.052	-.072	-.591

APPENDIX A -- PRESSURE DATA: BASS BROTHERS BUILDING - PHASE I, DALLAS, TEXAS -- CONFIGURATION A

WD	TAP	CPMEAN	CPRMS	CPMAX	CPMIN
100	434	-.262	.056	.066	-.630
100	435	-.258	.058	.125	-.548
100	436	-.265	.059	-.030	-.639
100	437	-.284	.077	-.060	-.620
100	438	-.322	.101	-.026	-.870
100	439	-.484	.071	-.274	-.851
100	440	-.369	.148	.084	-1.234
100	441	-.393	.161	.068	-1.221
100	442	-.474	.098	-.083	-1.013
100	443	-.372	.122	.024	-1.162
100	444	-.363	.123	.024	-1.302
100	445	-.320	.077	-.053	-.714
100	446	-.327	.085	-.060	-.772
100	447	-.367	.117	-.024	-.990
100	449	-.341	.053	-.149	-.632
100	450	-.250	.058	-.003	-.500
100	451	-.372	.060	-.103	-.625
100	452	-.458	.091	.023	-1.039
100	453	-.530	.154	-.056	-1.233
100	454	-.244	.046	-.101	-.493
100	455	-.341	.056	-.050	-.535
100	456	-.209	.061	.115	-.456
100	457	-.233	.067	.156	-.452
100	458	-.279	.059	-.067	-.506
100	459	-.327	.082	-.044	-.700
100	460	-.336	.080	-.096	-.737
100	461	-.431	.113	.077	-1.217
100	462	-.234	.046	-.081	-.526
100	463	-.170	.068	.176	-.396
100	464	-.361	.061	-.099	-.636
100	465	-.418	.073	-.195	-.915
100	466	-.215	.041	-.058	-.445
100	467	-.175	.054	.078	-.379
100	468	-.219	.044	-.018	-.426
100	469	-.405	.058	.035	-.712
100	470	-.253	.103	.217	-.765
100	471	-.239	.107	.390	-.710
100	472	-.368	.047	-.212	-.592
100	473	-.365	.051	-.181	-.675
100	474	-.363	.057	-.167	-.676
100	475	-.381	.072	-.118	-.819
100	476	-.298	.094	.140	-.659
100	477	-.200	.109	.299	-.521
100	478	-.258	.090	.149	-.702
100	479	-.332	.046	-.133	-.545
100	480	-.297	.061	.017	-.578
100	481	-.280	.103	.139	-.607
100	482	-.302	.081	.089	-.632
100	483	-.315	.079	.037	-.744
100	484	-.159	.143	.427	-.915

WD	TAP	CPMEAN	CPRMS	CPMAX	CPMIN
100	702	-.301	.067	-.043	-.557
100	703	-.232	.067	.030	-.522
100	704	-.381	.076	-.116	-.794
100	801	-.239	.113	.348	-.803
100	802	-.285	.145	.527	-.935
100	803	-.350	.155	.445	-1.201
100	804	-.303	.145	.513	-.822
100	805	-.402	.133	.314	-1.227
100	806	-.321	.171	.432	-1.285
100	807	-.395	.122	.289	-.924
100	808	-.298	.154	.327	-1.062
100	809	-.446	.097	.032	-.959
100	810	-.393	.090	.104	-.781
100	811	-.235	.177	.581	-.970
100	905	-.536	.118	-.205	-1.189
100	906	-.313	.046	-.133	-.547
100	907	-.379	.061	-.195	-.923
100	908	-.342	.054	-.157	-.629
100	909	-.364	.062	-.101	-.641
100	910	-.341	.101	.023	-1.003
100	911	-.278	.062	.065	-.528
100	912	-.215	.068	.041	-.561
100	913	-.276	.087	.129	-.568
100	915	-.292	.100	.235	-.822
110	101	-.287	.103	.069	-.795
110	102	-.330	.110	.015	-1.013
110	103	-.350	.108	.088	-.890
110	104	-.332	.102	.026	-.838
110	105	-.310	.086	.019	-.693
110	106	-.310	.087	.020	-.867
110	107	-.275	.089	.119	-.848
110	108	-.278	.087	.008	-.740
110	109	-.301	.094	.025	-1.068
110	110	-.330	.096	-.014	-.892
110	111	-.320	.084	-.030	-.932
110	112	-.300	.071	-.055	-.669
110	113	-.273	.058	-.084	-.566
110	114	-.269	.058	-.071	-.587
110	115	-.269	.058	-.092	-.537
110	116	-.339	.094	.045	-.966
110	117	-.276	.061	-.048	-.688
110	118	-.265	.050	-.029	-.571
110	119	-.249	.044	-.056	-.461
110	120	-.262	.044	-.099	-.450
110	121	-.247	.041	-.128	-.392
110	122	-.263	.053	-.101	-.511
110	123	-.260	.057	-.097	-.506
110	124	-.298	.095	-.010	-.947
110	125	-.275	.072	.002	-.877
110	126	-.255	.061	.001	-.690

WD	TAP	CPMEAN	CPRMS	CPMAX	CPMIN
110	127	-.257	.045	-.062	-.523
110	128	-.249	.045	-.099	-.468
110	129	-.371	.044	-.169	-.570
110	130	-.250	.047	-.100	-.486
110	131	-.266	.052	-.091	-.511
110	133	-.316	.064	-.116	-.704
110	134	-.303	.060	-.122	-.733
110	135	-.286	.051	-.123	-.616
110	136	-.280	.041	-.118	-.551
110	137	-.270	.037	-.152	-.471
110	139	-.368	.044	-.159	-.585
110	140	-.327	.088	-.112	-1.065
110	141	-.317	.082	-.116	-1.031
110	142	-.323	.076	-.113	-1.276
110	143	-.303	.055	-.125	-.709
110	144	-.269	.042	-.108	-.497
110	145	-.244	.037	-.111	-.430
110	146	-.257	.042	-.104	-.453
110	147	-.393	.046	-.167	-.613
110	148	-.410	.067	-.214	-.879
110	149	-.382	.063	-.196	-.907
110	150	-.399	.063	-.227	-.840
110	151	-.409	.048	-.096	-.715
110	152	-.247	.040	-.092	-.418
110	153	-.259	.048	-.080	-.467
110	154	-.245	.047	-.038	-.456
110	155	-.243	.053	-.074	-.586
110	156	-.363	.061	-.143	-.773
110	157	-.431	.063	-.205	-.811
110	158	-.399	.052	-.204	-.905
110	159	-.407	.051	-.200	-.598
110	160	-.244	.053	.002	-.568
110	161	-.339	.059	-.110	-.749
110	162	-.438	.070	-.134	-.743
110	163	-.414	.071	-.130	-.728
110	164	-.409	.057	-.202	-.753
110	165	-.322	.054	-.143	-.687
110	166	-.423	.053	-.205	-.691
110	167	-.364	.050	-.129	-.593
110	168	-.404	.045	-.141	-.608
110	169	-.317	.044	-.095	-.592
110	170	-.303	.065	-.058	-.540
110	171	-.342	.084	-.051	-.725
110	201	-.292	.184	.618	-1.057
110	202	-.394	.154	.437	-1.552
110	203	-.440	.092	.086	-.830
110	204	-.381	.089	.050	-1.013
110	205	-.381	.117	.020	-1.342
110	206	-.373	.115	.074	-1.036
110	207	-.359	.125	.138	-1.039

APPENDIX A -- PRESSURE DATA: BASS BROTHERS BUILDING - PHASE I, DALLAS, TEXAS -- CONFIGURATION A

WD	TAP	CPMEAN	CPRMS	CPMAX	CPMIN
110	208	-.424	.078	-.179	-.759
110	209	-.413	.068	-.184	-.718
110	210	-.386	.067	-.116	-.688
110	211	-.378	.068	-.108	-.791
110	212	-.364	.068	-.120	-.795
110	213	-.363	.080	-.119	-.778
110	214	-.603	.065	-.370	-.862
110	215	-.385	.061	-.163	-.730
110	216	-.385	.062	-.139	-.793
110	217	-.368	.065	-.063	-.664
110	218	-.398	.076	-.039	-.698
110	219	-.373	.082	-.038	-.730
110	220	-.359	.110	.175	-.907
110	221	-.358	.133	.174	-1.102
110	222	-.442	.077	-.222	-.804
110	223	-.549	.089	-.111	-.909
110	224	-.450	.092	.162	-.802
110	225	-.465	.091	.050	-.754
110	225	-.465	.091	.050	-.754
110	226	-.389	.109	.290	-.784
110	227	-.322	.129	.536	-.809
110	228	-.259	.139	.492	-.659
110	229	-.252	.132	.372	-.821
110	230	-.713	.252	.205	-3.207
110	232	-.334	.189	.673	-.889
110	233	-.651	.208	-.015	-1.728
110	234	-.651	.276	.272	-1.935
110	235	-.456	.200	.248	-1.484
110	236	-.205	.134	.468	-.784
110	237	-.377	.177	.590	-.955
110	239	-.128	.134	.557	-.542
110	240	-.173	.108	.338	-.572
110	241	-.405	.133	.048	-.952
110	242	-.340	.109	.034	-.813
110	243	-.450	.097	.100	-.962
110	244	-.316	.096	.115	-.731
110	245	-.222	.118	.427	-.618
110	249	-.525	.114	-.155	-.941
110	250	-.375	.109	.486	-.738
110	252	-.482	.199	.033	-1.469
110	253	-.509	.158	-.070	-1.452
110	254	-.285	.079	-.038	-.642
110	255	-.285	.072	-.041	-.684
110	256	-.408	.096	-.019	-.783
110	257	-.475	.125	.015	-1.070
110	258	-.392	.100	.000	-1.177
110	259	-.217	.058	.031	-.433
110	260	-.288	.062	-.027	-.582
110	261	-.195	.076	.199	-.526
110	262	-.474	.102	-.157	-1.113

WD	TAP	CPMEAN	CPRMS	CPMAX	CPMIN
110	263	-.475	.100	-.119	-.943
110	264	-.559	.124	-.205	-1.441
110	265	-.435	.099	-.160	-.887
110	266	-.469	.066	-.261	-.757
110	267	-.467	.097	-.100	-.962
110	268	-.488	.110	-.150	-1.043
110	269	-.395	.100	.028	-1.012
110	270	-.238	.080	.153	-.451
110	271	-.437	.069	-.130	-.728
110	272	-.406	.063	-.045	-.651
110	273	-.375	.081	-.024	-.880
110	280	-.406	.102	.133	-.831
110	301	-.348	.205	.641	-1.059
110	302	-.214	.260	.710	-1.064
110	303	-.201	.238	.847	-1.144
110	304	-.237	.194	.651	-.972
110	305	-.303	.162	.462	-.874
110	306	-.361	.105	.131	-.936
110	307	-.374	.112	.116	-1.150
110	308	-.643	.113	-.175	-1.107
110	309	-.195	.170	.618	-.626
110	310	-.285	.146	.465	-.779
110	311	-.366	.114	.320	-1.048
110	312	-.617	.111	-.222	-1.070
110	313	-.236	.244	.844	-1.416
110	314	-.330	.255	.788	-1.079
110	315	-.367	.222	.615	-1.184
110	316	-.427	.216	.454	-1.740
110	317	-.205	.190	.472	-.799
110	318	-.353	.269	.838	-1.363
110	319	-.182	.223	1.095	-1.230
110	320	-.295	.172	.922	-1.087
110	321	-.261	.142	.726	-1.139
110	322	-.480	.092	-.124	-1.003
110	323	-.429	.100	-.090	-.913
110	324	-.162	.230	.686	-.952
110	325	-.167	.267	.794	-1.219
110	326	-.188	.198	.555	-1.225
110	327	-.350	.228	.576	-1.406
110	328	-.323	.135	.354	-1.045
110	329	-.623	.196	.024	-1.593
110	330	-.531	.161	.001	-1.279
110	331	-.162	.199	.664	-1.111
110	332	-.127	.250	.993	-1.011
110	333	-.117	.195	.910	-.919
110	334	-.087	.194	.910	-.790
110	335	-.220	.160	.507	-.765
110	336	-.317	.119	.211	-.742
110	337	-.350	.092	.100	-.700
110	338	-.374	.078	-.021	-.652

WD	TAP	CPMEAN	CPRMS	CPMAX	CPMIN
110	339	-.382	.064	-.155	-.671
110	340	-.030	.187	.684	-.683
110	341	.075	.243	.836	-.696
110	342	.077	.198	.841	-.566
110	343	.096	.198	.946	-.494
110	344	-.036	.178	.634	-.568
110	345	-.213	.136	.450	-.777
110	346	-.276	.104	.209	-.683
110	347	-.358	.090	.011	-.686
110	348	-.371	.075	-.052	-.680
110	349	-.058	.160	.635	-.661
110	350	.191	.208	.995	-.676
110	352	.192	.183	.998	-.392
110	353	-.060	.147	.497	-.575
110	354	-.071	.137	.532	-.587
110	355	-.103	.134	.432	-.585
110	359	-.148	.154	.517	-.685
110	360	-.274	.156	.434	-.778
110	361	.134	.164	.798	-.428
110	362	.143	.159	.730	-.346
110	363	.084	.161	.689	-.481
110	364	.040	.151	.606	-.558
110	365	-.280	.166	.337	-.894
110	366	-.464	.202	.565	-1.294
110	367	-.128	.164	.379	-.857
110	368	-.254	.124	.510	-.715
110	369	.020	.136	.673	-.341
110	370	.156	.164	.862	-.283
110	371	.121	.152	.829	-.444
110	372	.097	.163	.725	-.570
110	373	-.196	.205	.575	-1.101
110	374	.073	.128	.758	-.297
110	375	.154	.167	.756	-.404
110	376	-.326	.113	.115	-.809
110	377	-.194	.118	.513	-.590
110	378	-.189	.136	.686	-.586
110	379	-.198	.116	.464	-.529
110	380	-.036	.148	.542	-.506
110	381	.068	.138	.719	-.385
110	382	-.242	.185	.446	-.970
110	383	-.352	.103	.071	-.787
110	384	-.189	.170	.660	-.757
110	385	-.297	.168	.354	-1.144
110	386	-.227	.095	.149	-.704
110	387	-.338	.137	.536	-.870
110	388	-.394	.105	.025	-.824
110	389	-.244	.114	.272	-.704
110	390	-.156	.110	.437	-.454
110	391	-.306	.091	.208	-.567
110	392	-.523	.138	-.184	-1.299

APPENDIX A -- PRESSURE DATA: BASS BROTHERS BUILDING - PHASE I, DALLAS, TEXAS -- CONFIGURATION A

WD	TAP	CPMEAN	CPRMS	CPMAX	CPMIN
110	393	-.447	.072	-.207	-.793
110	401	-.303	.096	-.027	-.921
110	402	-.296	.096	-.020	-.943
110	403	-.411	.107	-.069	-1.220
110	404	-.534	.126	-.107	-1.650
110	405	-.407	.129	-.035	-1.267
110	406	-.556	.169	-.109	-1.598
110	407	-.461	.154	-.021	-1.335
110	408	-.486	.118	-.074	-1.144
110	409	-.471	.117	-.002	-1.178
110	410	-.452	.119	.013	-1.459
110	411	-.478	.084	-.141	-.870
110	412	-.540	.135	-.156	-1.283
110	413	-.606	.151	-.091	-1.615
110	414	-.403	.186	.279	-1.361
110	415	-.627	.182	-.076	-1.597
110	416	-.312	.078	.067	-.692
110	417	-.358	.088	-.042	-.814
110	418	-.380	.096	-.075	-.901
110	419	-.383	.179	.225	-1.202
110	420	-.455	.182	.205	-1.504
110	421	-.528	.122	-.198	-1.184
110	422	-.521	.131	-.172	-1.268
110	423	-.576	.149	-.168	-1.554
110	424	-.316	.091	-.081	-.915
110	425	-.297	.093	.061	-.823
110	426	-.301	.093	.388	-.722
110	427	-.301	.080	-.011	-.654
110	428	-.349	.096	-.017	-.839
110	429	-.539	.118	-.168	-1.137
110	430	-.387	.126	.004	-1.017
110	431	-.415	.149	.003	-1.280
110	432	-.442	.151	-.029	-1.163
110	433	-.301	.086	-.025	-.854
110	434	-.313	.091	.054	-.873
110	435	-.319	.088	.074	-.644
110	436	-.328	.076	-.054	-.632
110	437	-.363	.095	-.021	-.838
110	438	-.393	.109	-.075	-.907
110	439	-.585	.093	-.344	-1.012
110	440	-.401	.128	-.071	-1.249
110	441	-.411	.136	-.069	-1.532
110	442	-.555	.120	-.088	-1.107
110	443	-.398	.104	-.056	-.969
110	444	-.390	.108	.053	-1.106
110	445	-.380	.095	-.046	-.782
110	446	-.391	.103	-.046	-.845
110	447	-.439	.130	-.077	-1.283
110	449	-.385	.067	-.102	-.686
110	450	-.339	.079	-.071	-.698

WD	TAP	CPMEAN	CPRMS	CPMAX	CPMIN
110	451	-.403	.075	-.136	-.752
110	452	-.574	.129	-.208	-1.172
110	453	-.649	.206	.092	-1.681
110	454	-.264	.048	-.085	-.529
110	455	-.379	.064	-.141	-.679
110	456	-.279	.066	-.031	-.568
110	457	-.318	.074	-.074	-.644
110	458	-.366	.079	-.112	-.717
110	459	-.395	.098	-.090	-.889
110	460	-.418	.108	-.139	-.899
110	461	-.524	.125	-.196	-1.239
110	462	-.272	.047	-.075	-.539
110	463	-.238	.076	.240	-.534
110	464	-.469	.081	-.229	-.925
110	465	-.470	.105	-.193	-1.148
110	466	-.248	.048	-.067	-.463
110	467	-.238	.073	.112	-.515
110	468	-.283	.060	-.087	-.602
110	469	-.479	.066	-.237	-.809
110	470	-.350	.098	.101	-.887
110	471	-.355	.148	.141	-1.038
110	472	-.403	.048	-.238	-.629
110	473	-.394	.049	-.224	-.690
110	474	-.413	.073	-.191	-.708
110	475	-.461	.105	-.056	-.885
110	476	-.411	.124	.148	-1.027
110	477	-.325	.116	.206	-.747
110	478	-.446	.190	.030	-1.347
110	479	-.390	.056	-.167	-.666
110	480	-.320	.080	.033	-.697
110	481	-.411	.099	.067	-.780
110	482	-.429	.116	.018	-1.013
110	483	-.457	.137	-.027	-1.045
110	484	-.320	.180	.259	-1.018
110	702	-.396	.097	-.125	-.841
110	703	-.278	.091	.178	-.721
110	704	-.347	.165	.296	-1.092
110	801	-.221	.127	.393	-.686
110	802	-.274	.148	.319	-1.048
110	803	-.316	.119	.422	-.905
110	804	-.265	.165	.443	-.935
110	805	-.345	.127	.517	-.773
110	806	-.332	.184	.410	-1.629
110	807	-.381	.148	.319	-1.229
110	808	-.308	.171	.477	-.996
110	809	-.448	.113	.124	-.902
110	810	-.380	.108	.313	-.989
110	811	-.256	.197	.693	-.961
110	905	-.436	.082	-.170	-1.272
110	906	-.359	.051	-.186	-.550

WD	TAP	CPMEAN	CPRMS	CPMAX	CPMIN
110	907	-.335	.051	-.126	-.538
110	908	-.395	.053	-.189	-.718
110	909	-.461	.085	-.196	-.824
110	910	-.447	.078	-.123	-.786
110	911	-.331	.090	.006	-.823
110	912	-.207	.058	.039	-.447
110	913	-.304	.099	.139	-.702
110	915	-.381	.155	.106	-1.060
120	101	-.301	.083	-.002	-.690
120	102	-.320	.084	-.040	-.752
120	103	-.389	.136	-.007	-1.094
120	104	-.392	.128	-.022	-.993
120	105	-.335	.097	.057	-.811
120	106	-.313	.092	-.005	-.867
120	107	-.323	.098	-.036	-1.196
120	108	-.300	.070	-.077	-.663
120	109	-.307	.076	-.080	-.676
120	110	-.344	.109	-.016	-1.228
120	111	-.315	.094	.030	-.891
120	112	-.314	.077	-.068	-.718
120	113	-.325	.058	-.106	-.659
120	114	-.300	.055	-.113	-.581
120	115	-.303	.052	-.102	-.520
120	116	-.322	.070	-.104	-.808
120	117	-.303	.051	-.143	-.704
120	118	-.323	.045	-.189	-.696
120	119	-.283	.038	-.168	-.456
120	120	-.280	.039	-.156	-.445
120	121	-.279	.040	-.129	-.429
120	122	-.315	.049	-.136	-.548
120	123	-.290	.055	-.109	-.522
120	124	-.326	.064	-.132	-.700
120	125	-.281	.048	-.125	-.500
120	126	-.278	.041	-.152	-.488
120	127	-.301	.034	-.198	-.437
120	128	-.279	.035	-.150	-.422
120	129	-.414	.039	-.268	-.558
120	130	-.282	.047	-.136	-.476
120	131	-.328	.056	-.156	-.580
120	133	-.312	.047	-.083	-.655
120	134	-.294	.043	-.097	-.513
120	135	-.289	.039	-.132	-.520
120	136	-.289	.038	-.170	-.417
120	137	-.300	.039	-.176	-.457
120	139	-.418	.049	-.271	-.659
120	140	-.318	.055	-.142	-.590
120	141	-.311	.051	-.128	-.560
120	142	-.310	.048	-.159	-.544
120	143	-.307	.044	-.145	-.510
120	144	-.290	.041	-.145	-.447

APPENDIX A -- PRESSURE DATA: BASS BROTHERS BUILDING - PHASE I, DALLAS, TEXAS -- CONFIGURATION A

WD	TAP	CPMEAN	CPRMS	CPMAX	CPMIN
120	145	-.287	.041	-.158	-.476
120	146	-.294	.045	-.166	-.528
120	147	-.447	.050	-.282	-.673
120	148	-.442	.063	-.257	-.706
120	149	-.422	.061	-.244	-.697
120	150	-.440	.058	-.217	-.699
120	151	-.463	.054	-.287	-.719
120	152	-.295	.044	-.152	-.483
120	153	-.296	.047	-.159	-.516
120	154	-.290	.049	-.127	-.570
120	155	-.303	.053	-.118	-.609
120	156	-.394	.059	-.147	-.712
120	157	-.494	.060	-.279	-.893
120	158	-.473	.055	-.241	-.767
120	159	-.451	.056	-.259	-.740
120	160	-.293	.056	-.138	-.626
120	161	-.382	.072	-.194	-.839
120	162	-.514	.070	-.291	-.863
120	163	-.507	.076	-.278	-.949
120	164	-.454	.061	-.293	-.870
120	165	-.360	.057	-.189	-.792
120	166	-.485	.056	-.320	-.697
120	167	-.433	.050	-.254	-.632
120	168	-.451	.049	-.269	-.678
120	169	-.354	.047	-.187	-.589
120	170	-.308	.072	-.036	-.572
120	171	-.449	.104	-.166	-.999
120	201	-.256	.210	.428	-1.151
120	202	-.415	.226	.539	-1.397
120	203	-.461	.156	.346	-1.247
120	204	-.445	.160	.272	-1.863
120	205	-.435	.209	.265	-1.671
120	206	-.375	.133	.344	-1.124
120	207	-.366	.143	.491	-1.004
120	208	-.411	.107	-.134	-1.065
120	209	-.396	.109	-.113	-1.114
120	210	-.399	.112	-.055	-1.076
120	211	-.432	.116	-.082	-1.039
120	212	-.402	.127	.100	-1.054
120	213	-.370	.118	.191	-.879
120	214	-.574	.057	-.409	-.890
120	215	-.365	.055	-.201	-.643
120	216	-.393	.057	-.212	-.680
120	217	-.369	.064	-.156	-.971
120	218	-.388	.066	-.124	-.686
120	219	-.375	.066	-.053	-.674
120	220	-.349	.078	.039	-.717
120	221	-.340	.086	.044	-.771
120	222	-.427	.079	-.199	-1.201
120	223	-.576	.093	-.244	-1.014

WD	TAP	CPMEAN	CPRMS	CPMAX	CPMIN
120	224	-.450	.085	-.236	-.982
120	225	-.515	.087	-.239	-1.081
120	225	-.515	.087	-.239	-1.081
120	226	-.440	.089	-.124	-.896
120	227	-.398	.084	.010	-.861
120	228	-.344	.080	.048	-.854
120	229	-.333	.089	.051	-.976
120	230	-.844	.281	.084	-2.629
120	232	-.453	.134	.203	-1.001
120	233	-.679	.217	-.189	-1.998
120	234	-.542	.180	-.147	-1.606
120	235	-.525	.169	.086	-1.467
120	236	-.367	.107	.501	-.750
120	237	-.478	.138	.287	-1.008
120	239	-.295	.081	.214	-.637
120	240	-.303	.079	.067	-.801
120	241	-.379	.157	.048	-1.251
120	242	-.372	.125	.164	-1.172
120	243	-.604	.170	-.014	-1.456
120	244	-.460	.130	-.004	-1.119
120	245	-.364	.103	.344	-.786
120	249	-.597	.151	.020	-1.319
120	250	-.471	.090	.073	-.812
120	252	-.441	.172	.133	-1.694
120	253	-.592	.186	.090	-1.437
120	254	-.290	.095	.037	-.680
120	255	-.363	.077	-.114	-.936
120	256	-.384	.123	.171	-1.007
120	257	-.433	.114	.005	-1.051
120	258	-.449	.083	.000	-1.138
120	259	-.263	.062	-.069	-.576
120	260	-.375	.070	-.135	-.693
120	261	-.141	.085	.146	-.556
120	262	-.617	.163	-.182	-1.324
120	263	-.547	.133	-.106	-1.231
120	264	-.593	.113	-.232	-1.055
120	265	-.465	.117	-.081	-1.133
120	266	-.483	.060	-.301	-.797
120	267	-.464	.103	-.044	-.944
120	268	-.480	.102	-.123	-1.171
120	269	-.454	.075	-.219	-.974
120	270	-.182	.082	.421	-.388
120	271	-.525	.074	-.224	-.869
120	272	-.461	.073	-.202	-.791
120	273	-.404	.077	-.189	-.873
120	280	-.338	.136	.286	-.977
120	301	-.038	.250	.801	-.788
120	302	.102	.170	.791	-.817
120	303	.342	.234	1.099	-.678
120	304	.272	.221	.957	-.624

WD	TAP	CPMEAN	CPRMS	CPMAX	CPMIN
120	305	.030	.180	.739	-.563
120	306	-.271	.182	.568	-.939
120	307	-.313	.160	.584	-.883
120	308	-.520	.214	.271	-1.466
120	309	-.101	.213	.946	-.738
120	310	-.244	.228	.668	-1.006
120	311	.002	.210	.886	-.649
120	312	-.504	.219	.321	-1.314
120	313	.085	.158	.720	-.575
120	314	.351	.262	1.011	-.789
120	315	.312	.266	.996	-.873
120	316	.139	.261	.949	-.948
120	317	-.007	.135	.526	-.558
120	318	.109	.214	.940	-.854
120	319	.324	.216	1.088	-.485
120	320	.190	.226	.991	-.645
120	321	.161	.204	1.098	-.511
120	322	-.503	.149	.046	-1.087
120	323	-.267	.224	.696	-.928
120	324	.087	.165	.661	-.695
120	325	.352	.242	1.144	-.849
120	326	.338	.219	.995	-.357
120	327	.189	.244	1.103	-.740
120	328	.076	.238	1.061	-.688
120	329	-.498	.389	.751	-1.906
120	330	-.350	.229	.561	-1.215
120	331	.022	.142	.510	-.628
120	332	.336	.217	1.110	-.665
120	333	.360	.191	1.040	-.518
120	334	.366	.185	1.079	-.219
120	335	.260	.202	1.042	-.380
120	336	.070	.203	1.015	-.490
120	337	-.068	.173	.781	-.603
120	338	-.212	.140	.416	-.625
120	339	-.308	.088	.055	-.611
120	340	-.019	.147	.642	-.599
120	341	.316	.186	1.085	-.488
120	342	.379	.168	.992	-.274
120	343	.389	.167	1.064	-.239
120	344	.342	.171	.983	-.361
120	345	.175	.180	.924	-.459
120	346	.043	.167	.783	-.483
120	347	-.117	.154	.519	-.643
120	348	-.229	.127	.379	-.681
120	349	-.113	.136	.575	-.654
120	350	.283	.177	1.020	-.557
120	352	.325	.154	.981	-.198
120	353	.151	.155	.657	-.568
120	354	.122	.149	.596	-.508
120	355	.103	.151	.670	-.506

APPENDIX A -- PRESSURE DATA: BASS BROTHERS BUILDING - PHASE I, DALLAS, TEXAS -- CONFIGURATION A

WD	TAP	CPMEAN	CPRMS	CPMAX	CPMIN
120	359	-.115	.168	.764	-.836
120	360	-.257	.150	.358	-1.028
120	361	.210	.144	.746	-.175
120	362	.247	.183	1.057	-.424
120	363	.238	.201	1.162	-.881
120	364	.241	.191	.958	-.837
120	365	-.144	.199	.531	-1.355
120	366	-.521	.266	.445	-1.592
120	367	.033	.180	.718	-1.423
120	368	-.313	.130	.278	-.810
120	369	.001	.118	.614	-.351
120	370	.221	.152	.948	-.176
120	371	.193	.148	.822	-.272
120	372	.190	.161	.849	-.379
120	373	-.079	.222	.871	-1.469
120	374	.172	.141	.853	-.218
120	375	.264	.159	.861	-.143
120	376	-.252	.131	.249	-.748
120	377	-.129	.124	.562	-.624
120	378	-.082	.135	.568	-.582
120	379	-.106	.106	.439	-.430
120	380	.129	.157	.859	-.350
120	381	.105	.129	.674	-.274
120	382	-.242	.179	.447	-1.202
120	383	-.370	.130	.147	-.839
120	384	-.165	.206	.674	-1.106
120	385	-.380	.251	.284	-1.564
120	386	-.226	.093	.219	-.544
120	387	-.333	.163	.223	-1.395
120	388	-.392	.132	.073	-1.193
120	389	-.090	.119	.385	-.498
120	390	-.103	.120	.574	-.388
120	391	-.274	.119	.189	-.655
120	392	-.615	.156	-.084	-1.310
120	393	-.499	.085	-.192	-.826
120	401	-.312	.077	-.082	-.700
120	402	-.328	.081	-.059	-.724
120	403	-.458	.095	-.107	-1.003
120	404	-.624	.124	-.269	-1.116
120	405	-.386	.105	-.050	-1.018
120	406	-.751	.170	-.235	-1.343
120	407	-.545	.131	-.059	-1.149
120	408	-.530	.107	-.195	-1.132
120	409	-.536	.118	-.071	-1.140
120	410	-.545	.122	-.079	-1.213
120	411	-.596	.101	-.269	-1.154
120	412	-.555	.101	-.033	-1.044
120	413	-.596	.105	-.299	-1.122
120	414	-.665	.243	.171	-1.568
120	415	-1.110	.341	-.154	-2.342

WD	TAP	CPMEAN	CPRMS	CPMAX	CPMIN
120	416	-.409	.099	-.154	-1.092
120	417	-.426	.094	-.176	-.945
120	418	-.418	.096	-.161	-.824
120	419	-.507	.201	.183	-1.342
120	420	-.556	.224	.010	-1.610
120	421	-.597	.131	-.257	-1.495
120	422	-.598	.147	-.222	-1.546
120	423	-.659	.159	-.226	-1.524
120	424	-.432	.149	-.048	-1.234
120	425	-.408	.123	.035	-1.031
120	426	-.402	.104	.008	-.823
120	427	-.385	.076	-.123	-.742
120	428	-.411	.089	-.139	-.806
120	429	-.573	.101	-.187	-1.070
120	430	-.391	.101	-.093	-1.113
120	431	-.385	.093	-.093	-1.012
120	432	-.391	.088	-.118	-1.114
120	433	-.395	.124	-.048	-.994
120	434	-.404	.104	-.013	-.915
120	435	-.406	.089	-.016	-.814
120	436	-.406	.076	-.149	-.746
120	437	-.432	.091	-.152	-.782
120	438	-.437	.094	-.164	-1.038
120	439	-.609	.084	-.335	-.976
120	440	-.421	.094	-.088	-1.085
120	441	-.428	.095	-.103	-1.203
120	442	-.616	.118	-.235	-1.442
120	443	-.432	.101	-.178	-1.087
120	444	-.430	.105	-.099	-1.059
120	445	-.460	.110	-.167	-1.097
120	446	-.461	.115	-.158	-1.229
120	447	-.485	.130	-.169	-1.311
120	449	-.425	.080	-.097	-.808
120	450	-.397	.095	-.057	-.962
120	451	-.463	.091	-.145	-.865
120	452	-.710	.152	-.344	-1.541
120	453	-.704	.199	-.090	-2.098
120	454	-.311	.055	-.111	-.588
120	455	-.432	.076	-.121	-.794
120	456	-.314	.075	.162	-.616
120	457	-.371	.085	-.104	-.774
120	458	-.409	.089	-.163	-.806
120	459	-.459	.108	-.135	-.932
120	460	-.480	.117	-.177	-1.077
120	461	-.665	.182	-.222	-2.250
120	462	-.331	.057	-.164	-.650
120	463	-.270	.074	.020	-.541
120	464	-.524	.098	-.252	-.957
120	465	-.590	.142	-.166	-1.369
120	466	-.303	.048	-.153	-.513

WD	TAP	CPMEAN	CPRMS	CPMAX	CPMIN
120	467	-.263	.081	.077	-.550
120	468	-.316	.060	-.147	-.640
120	469	-.536	.073	-.291	-.912
120	470	-.421	.149	-.064	-1.075
120	471	-.470	.212	.139	-1.461
120	472	-.460	.059	-.229	-.904
120	473	-.454	.070	-.226	-.936
120	474	-.503	.087	-.263	-1.036
120	475	-.562	.120	-.208	-1.165
120	476	-.580	.132	-.109	-1.207
120	477	-.467	.113	.085	-.934
120	478	-.752	.262	.096	-1.715
120	479	-.467	.070	-.176	-.866
120	480	-.388	.077	-.149	-.821
120	481	-.522	.088	-.136	-.891
120	482	-.550	.118	-.074	-1.060
120	483	-.633	.132	-.251	-1.189
120	484	-.475	.155	.052	-1.341
120	702	-.422	.104	-.157	-.965
120	703	-.330	.094	-.081	-.804
120	704	-.260	.176	.428	-1.038
120	801	-.258	.109	.316	-.811
120	802	-.271	.126	.211	-1.029
120	803	-.139	.189	.696	-.798
120	804	-.369	.223	.473	-1.092
120	805	-.217	.201	.605	-1.023
120	806	-.507	.181	.026	-1.647
120	807	-.472	.258	.473	-1.532
120	808	-.551	.157	.189	-1.162
120	809	-.379	.209	.659	-1.190
120	810	-.420	.246	.436	-1.204
120	811	-.505	.205	.308	-1.166
120	905	-.473	.058	-.280	-.700
120	906	-.406	.064	-.219	-.789
120	907	-.388	.050	-.211	-.617
120	908	-.455	.059	-.239	-.827
120	909	-.512	.096	-.213	-.982
120	910	-.483	.090	-.192	-.851
120	911	-.445	.080	-.137	-.779
120	912	-.194	.063	.001	-.461
120	913	-.300	.106	.183	-.927
120	915	-.516	.195	-.009	-1.324
130	101	-.357	.085	-.046	-.776
130	102	-.351	.088	-.051	-.746
130	103	-.439	.142	-.045	-1.085
130	104	-.481	.142	-.091	-1.090
130	105	-.399	.107	-.096	-.914
130	106	-.366	.094	-.073	-.835
130	107	-.390	.077	-.117	-.701
130	108	-.334	.077	-.079	-.692

APPENDIX A -- PRESSURE DATA: BASS BROTHERS BUILDING - PHASE I, DALLAS, TEXAS -- CONFIGURATION A

WD	TAP	CPMEAN	CPRMS	CPMAX	CPMIN
130	109	-.334	.081	-.106	-.697
130	110	-.417	.148	.000	-1.228
130	111	-.374	.116	-.049	-.837
130	112	-.373	.092	-.128	-.772
130	113	-.392	.075	-.175	-.718
130	114	-.346	.062	-.112	-.636
130	115	-.340	.058	-.160	-.617
130	116	-.396	.132	-.022	-1.223
130	117	-.384	.106	-.082	-1.196
130	118	-.400	.084	-.151	-.998
130	119	-.354	.066	-.166	-.858
130	120	-.339	.057	-.191	-.565
130	121	-.337	.054	-.167	-.561
130	122	-.375	.061	-.187	-.631
130	123	-.350	.067	-.096	-.657
130	124	-.355	.074	-.125	-.800
130	125	-.311	.053	-.138	-.572
130	126	-.307	.046	-.147	-.552
130	127	-.337	.041	-.187	-.585
130	128	-.306	.042	-.170	-.519
130	129	-.442	.051	-.223	-.766
130	130	-.309	.062	-.123	-.696
130	131	-.368	.075	-.151	-.815
130	133	-.304	.050	-.107	-.547
130	134	-.284	.045	-.059	-.509
130	135	-.284	.042	-.057	-.463
130	136	-.298	.046	-.119	-.464
130	137	-.332	.052	-.175	-.556
130	139	-.452	.055	-.277	-.843
130	140	-.331	.065	-.161	-.689
130	141	-.306	.050	-.080	-.551
130	142	-.298	.046	-.086	-.490
130	143	-.309	.044	-.128	-.466
130	144	-.314	.047	-.149	-.507
130	145	-.329	.048	-.151	-.579
130	146	-.325	.050	-.177	-.541
130	147	-.476	.054	-.332	-.719
130	148	-.447	.062	-.268	-.740
130	149	-.435	.062	-.244	-.689
130	150	-.432	.054	-.221	-.700
130	151	-.487	.056	-.288	-.728
130	152	-.345	.047	-.206	-.556
130	153	-.332	.055	-.184	-.557
130	154	-.328	.049	-.186	-.576
130	155	-.336	.055	-.203	-.591
130	156	-.397	.060	-.218	-.745
130	157	-.492	.060	-.237	-.760
130	158	-.492	.054	-.255	-.740
130	159	-.501	.059	-.341	-.811
130	160	-.335	.057	-.172	-.693
130	161	-.407	.059	-.251	-.880
130	162	-.518	.063	-.285	-.961
130	163	-.507	.063	-.311	-.938
130	164	-.494	.054	-.356	-.709
130	165	-.403	.054	-.260	-.664
130	166	-.486	.054	-.211	-.853
130	167	-.444	.052	-.235	-.638
130	168	-.502	.053	-.302	-.736
130	169	-.405	.051	-.251	-.655
130	170	-.326	.068	-.031	-.592
130	171	-.482	.109	-.189	-1.004
130	201	-.366	.141	.236	-.869
130	202	-.592	.176	.123	-1.518
130	203	-.535	.168	.241	-1.387
130	204	-.539	.182	.006	-1.363
130	205	-.480	.212	.342	-1.685
130	206	-.455	.150	.185	-1.231
130	207	-.441	.172	.625	-1.398
130	208	-.499	.130	-.091	-1.102
130	209	-.492	.136	-.063	-1.045
130	210	-.504	.143	-.075	-1.094
130	211	-.555	.155	-.124	-1.242
130	212	-.520	.160	-.021	-1.375
130	213	-.461	.142	-.051	-1.105
130	214	-.644	.091	-.365	-1.068
130	215	-.423	.080	-.214	-.737
130	216	-.463	.081	-.252	-.781
130	217	-.434	.089	-.228	-.957
130	218	-.483	.097	-.221	-1.039
130	219	-.449	.091	-.036	-.950
130	220	-.373	.109	.177	-.887
130	221	-.384	.122	.122	-1.076
130	222	-.419	.072	-.221	-.721
130	223	-.557	.088	-.319	-1.016
130	224	-.425	.089	-.197	-.920
130	225	-.534	.094	-.269	-1.063
130	225	-.534	.094	-.269	-1.063
130	226	-.504	.099	-.258	-1.112
130	227	-.456	.080	-.153	-.803
130	228	-.400	.093	-.078	-.822
130	229	-.425	.110	-.074	-1.030
130	230	-.674	.137	-.294	-1.778
130	232	-.589	.110	-.053	-1.189
130	233	-.610	.120	-.235	-1.422
130	234	-.551	.136	-.211	-1.565
130	235	-.549	.131	-.175	-1.437
130	236	-.485	.107	-.167	-1.004
130	237	-.632	.117	-.110	-1.120
130	239	-.358	.088	-.045	-.839
130	240	-.365	.099	-.038	-1.157
130	241	-.308	.108	.083	-.948
130	242	-.402	.125	-.073	-.986
130	243	-.652	.134	-.167	-1.359
130	244	-.551	.135	-.231	-1.236
130	245	-.495	.107	-.131	-1.006
130	249	-.571	.119	-.181	-1.110
130	250	-.548	.104	-.187	-1.096
130	252	-.359	.104	.017	-.964
130	253	-.541	.118	-.104	-1.294
130	254	-.256	.099	.089	-.718
130	255	-.420	.076	-.203	-.754
130	256	-.330	.102	.161	-.669
130	257	-.430	.088	-.034	-.821
130	258	-.510	.089	-.273	-.859
130	259	-.298	.060	-.133	-.583
130	260	-.445	.072	-.248	-.787
130	261	-.080	.098	.376	-.506
130	262	-.622	.163	-.221	-1.401
130	263	-.531	.118	-.249	-1.277
130	264	-.654	.098	-.373	-1.114
130	265	-.478	.088	-.202	-.903
130	266	-.458	.051	-.304	-.638
130	267	-.390	.106	.149	-.896
130	268	-.455	.082	-.046	-.816
130	269	-.493	.073	-.273	-.798
130	270	-.096	.083	.353	-.310
130	271	-.597	.093	-.324	-1.038
130	272	-.515	.078	-.254	-.847
130	273	-.404	.064	-.186	-.880
130	280	-.269	.113	.232	-.699
130	301	.066	.217	.881	-.779
130	302	.079	.119	.562	-.325
130	303	.390	.163	.962	-.067
130	304	.313	.155	.824	-.404
130	305	.080	.133	.600	-.420
130	306	-.229	.219	.491	-1.203
130	307	-.296	.183	.386	-1.048
130	308	-.204	.234	.725	-1.047
130	309	-.217	.139	.378	-.689
130	310	-.396	.167	.423	-.979
130	311	.346	.198	1.034	-.372
130	312	-.077	.241	.790	-1.048
130	313	.063	.113	.465	-.338
130	314	.436	.196	1.089	-.508
130	315	.444	.207	1.123	-.434
130	316	.233	.207	.959	-.552
130	317	-.068	.103	.399	-.459
130	318	.098	.134	.635	-.309
130	319	.433	.160	1.034	-.052
130	320	.407	.165	1.028	-.206

APPENDIX A -- PRESSURE DATA: BASS BROTHERS BUILDING - PHASE I, DALLAS, TEXAS -- CONFIGURATION A

WD	TAP	CPMEAN	CPRMS	CPMAX	CPMIN
130	321	.420	.177	1.173	-.115
130	322	-.300	.216	.336	-1.261
130	323	.150	.215	.858	-.854
130	324	.026	.120	.487	-.596
130	325	.344	.165	.937	-.153
130	326	.432	.164	1.083	-.018
130	327	.365	.189	1.047	-.123
130	328	.455	.183	1.010	-.174
130	329	.221	.272	.987	-1.237
130	330	.122	.225	1.021	-.901
130	331	-.044	.107	.537	-.522
130	332	.377	.148	1.012	-.344
130	333	.489	.158	1.028	-.090
130	334	.467	.156	1.037	-.117
130	335	.467	.156	1.087	-.118
130	336	.406	.159	1.117	-.135
130	337	.280	.155	.914	-.288
130	338	.111	.148	.632	-.438
130	339	-.080	.114	.352	-.438
130	340	-.141	.119	.334	-.826
130	341	.275	.127	.837	-.115
130	342	.403	.132	.887	-.001
130	343	.399	.132	.874	.006
130	344	.392	.145	1.048	.019
130	345	.368	.145	.865	-.157
130	346	.276	.135	.896	-.187
130	347	.126	.124	.762	-.375
130	348	-.009	.107	.423	-.374
130	349	-.193	.124	.472	-.836
130	350	.197	.136	.774	-.287
130	352	.317	.128	.885	-.025
130	353	.311	.134	.951	-.061
130	354	.277	.132	.905	-.092
130	355	.261	.133	.865	-.113
130	359	-.076	.181	.605	-.790
130	360	-.294	.143	.220	-.975
130	361	.189	.114	.604	-.109
130	362	.169	.176	.800	-.552
130	363	.158	.212	.838	-1.088
130	364	.206	.212	.858	-.789
130	365	-.030	.205	.715	-1.422
130	366	-.534	.197	.213	-1.624
130	367	.063	.198	.630	-1.264
130	368	-.367	.100	.074	-.742
130	369	-.017	.094	.372	-.327
130	370	.224	.128	.738	-.120
130	371	.203	.115	.688	-.126
130	372	.207	.123	.708	-.153
130	373	-.021	.169	.619	-.868
130	374	.192	.124	.683	-.149
130	375	.336	.154	1.073	-.056
130	376	-.197	.114	.328	-.744
130	377	-.027	.104	.635	-.550
130	378	-.017	.115	.590	-.618
130	379	-.000	.099	.459	-.263
130	380	.221	.158	1.357	-.172
130	381	.120	.109	.607	-.200
130	382	-.255	.137	.301	-.740
130	383	-.369	.131	.068	-.928
130	384	-.148	.180	.466	-1.065
130	385	-.525	.189	.235	-1.431
130	386	-.175	.082	.257	-.481
130	387	-.363	.147	.180	-1.177
130	388	-.418	.123	.157	-.945
130	389	.053	.112	.456	-.348
130	390	-.035	.107	.610	-.290
130	391	-.198	.121	.478	-.546
130	392	-.625	.137	-.207	-1.418
130	393	-.506	.076	-.198	-.838
130	401	-.343	.087	.034	-.703
130	402	-.373	.091	.076	-.733
130	403	-.498	.107	-.193	-1.267
130	404	-.635	.125	-.266	-1.302
130	405	-.409	.100	-.070	-.787
130	406	-.877	.149	-.399	-1.519
130	407	-.643	.124	-.187	-1.174
130	408	-.575	.142	-.118	-1.371
130	409	-.600	.141	-.088	-1.348
130	410	-.601	.139	-.146	-1.445
130	411	-.627	.101	-.356	-1.315
130	412	-.584	.095	-.308	-1.009
130	413	-.618	.096	-.342	-1.044
130	414	-.793	.194	-.033	-1.581
130	415	-1.249	.302	-.260	-2.349
130	416	-.430	.092	-.206	-.941
130	417	-.422	.090	-.216	-.887
130	418	-.433	.091	-.196	-.901
130	419	-.511	.153	-.092	-1.383
130	420	-.475	.138	-.130	-1.286
130	421	-.597	.104	-.322	-1.371
130	422	-.596	.118	-.305	-1.371
130	423	-.651	.142	-.305	-1.649
130	424	-.456	.166	-.001	-1.813
130	425	-.464	.139	.076	-1.164
130	426	-.462	.112	.039	-.976
130	427	-.419	.086	-.135	-.801
130	428	-.416	.091	-.143	-.829
130	429	-.613	.093	-.344	-1.090
130	430	-.421	.078	-.176	-.763
130	431	-.408	.076	-.162	-.760
130	432	-.389	.072	-.169	-.719
130	433	-.452	.167	.015	-1.307
130	434	-.475	.140	.023	-1.294
130	435	-.457	.121	.113	-1.120
130	436	-.428	.097	-.031	-.866
130	437	-.493	.116	-.162	-1.169
130	438	-.507	.114	-.214	-1.215
130	439	-.666	.097	-.458	-1.089
130	440	-.464	.100	-.197	-1.109
130	441	-.444	.098	-.174	-1.065
130	442	-.681	.152	-.335	-1.881
130	443	-.502	.127	-.164	-1.432
130	444	-.512	.125	-.182	-1.780
130	445	-.552	.135	-.243	-1.371
130	446	-.550	.138	-.234	-1.191
130	447	-.598	.156	-.260	-1.592
130	449	-.449	.098	.003	-1.016
130	450	-.419	.108	.021	-1.080
130	451	-.492	.101	-.102	-1.016
130	452	-.775	.173	-.336	-1.542
130	453	-.777	.231	-.261	-2.003
130	454	-.351	.066	-.096	-.647
130	455	-.460	.087	.012	-.975
130	456	-.311	.088	.215	-.648
130	457	-.408	.100	-.054	-.860
130	458	-.446	.107	-.151	-1.002
130	459	-.535	.134	-.170	-1.258
130	460	-.543	.136	-.172	-1.154
130	461	-.734	.209	-.285	-1.676
130	462	-.394	.070	-.155	-.707
130	463	-.278	.082	.103	-.610
130	464	-.558	.112	-.259	-1.124
130	465	-.640	.140	-.318	-1.246
130	466	-.349	.057	-.142	-.577
130	467	-.281	.107	.139	-.642
130	468	-.352	.070	-.135	-.668
130	469	-.583	.081	-.350	-.921
130	470	-.499	.185	-.072	-1.259
130	471	-.618	.237	.049	-1.585
130	472	-.493	.054	-.353	-.762
130	473	-.492	.065	-.318	-.809
130	474	-.531	.085	-.326	-.991
130	475	-.631	.117	-.314	-1.247
130	476	-.754	.162	-.330	-1.430
130	477	-.582	.130	-.010	-1.103
130	478	-.981	.296	.089	-2.058
130	479	-.494	.060	-.297	-.870
130	480	-.453	.080	-.218	-.940
130	481	-.624	.086	-.360	-1.179
130	482	-.693	.123	-.365	-1.266

APPENDIX A -- PRESSURE DATA: BASS BROTHERS BUILDING - PHASE I, DALLAS, TEXAS -- CONFIGURATION A

WD	TAP	CPMEAN	CPRMS	CPMAX	CPMIN
130	483	-.779	.128	-.450	-1.288
130	484	-.558	.154	-.133	-1.376
130	702	-.482	.123	-.192	-1.140
130	703	-.397	.110	-.064	-.882
130	704	-.300	.154	.297	-1.077
130	801	-.372	.108	.152	-.992
130	802	-.427	.123	.013	-.981
130	803	-.217	.214	.703	-.899
130	804	-.534	.141	.028	-1.076
130	805	-.326	.197	.463	-1.057
130	806	-.544	.168	-.196	-1.592
130	807	-.586	.184	.131	-1.421
130	808	-.593	.108	-.226	-1.015
130	809	-.574	.193	.236	-1.460
130	810	-.491	.244	.464	-1.380
130	811	-.618	.142	-.031	-1.263
130	905	-.468	.065	-.212	-.758
130	906	-.440	.057	-.249	-.802
130	907	-.406	.054	-.195	-.685
130	908	-.497	.055	-.355	-.745
130	909	-.545	.106	-.213	-1.033
130	910	-.468	.081	-.222	-.862
130	911	-.513	.081	-.174	-.936
130	912	-.171	.063	.132	-.560
130	913	-.236	.101	.184	-.656
130	915	-.582	.206	-.090	-1.484
140	101	-.347	.078	-.108	-.745
140	102	-.347	.096	-.068	-.858
140	103	-.407	.118	-.108	-.989
140	104	-.446	.120	-.138	-1.091
140	105	-.359	.083	-.077	-.691
140	106	-.355	.072	-.116	-.651
140	107	-.380	.065	-.191	-.646
140	108	-.330	.090	-.049	-.778
140	109	-.328	.093	-.003	-.808
140	110	-.408	.133	-.021	-1.198
140	111	-.364	.098	-.082	-.958
140	112	-.363	.067	-.173	-.696
140	113	-.377	.060	-.169	-.612
140	114	-.338	.057	-.159	-.615
140	115	-.319	.056	-.110	-.614
140	116	-.404	.102	-.109	-1.001
140	117	-.360	.076	-.138	-.887
140	118	-.378	.065	-.155	-.828
140	119	-.322	.051	-.138	-.808
140	120	-.313	.050	-.124	-.612
140	121	-.315	.053	-.126	-.582
140	122	-.369	.081	-.099	-.799
140	123	-.367	.094	-.084	-.817
140	124	-.410	.089	-.149	-.807
140	125	-.349	.065	-.165	-.585
140	126	-.333	.055	-.170	-.538
140	127	-.355	.049	-.189	-.522
140	128	-.316	.048	-.157	-.521
140	129	-.464	.066	-.275	-.782
140	130	-.330	.081	-.087	-.759
140	131	-.383	.093	-.108	-.886
140	133	-.319	.061	-.026	-.589
140	134	-.299	.056	-.063	-.515
140	135	-.303	.055	-.105	-.568
140	136	-.341	.059	-.092	-.586
140	137	-.385	.062	-.189	-.623
140	139	-.496	.065	-.309	-.982
140	140	-.338	.079	-.082	-.845
140	141	-.316	.060	-.075	-.669
140	142	-.317	.062	-.030	-.639
140	143	-.340	.058	-.133	-.684
140	144	-.363	.066	-.132	-.682
140	145	-.371	.061	-.235	-.669
140	146	-.349	.053	-.204	-.570
140	147	-.501	.064	-.319	-1.121
140	148	-.474	.073	-.253	-1.092
140	149	-.478	.074	-.258	-1.023
140	150	-.462	.062	-.149	-.714
140	151	-.519	.061	-.358	-.806
140	152	-.377	.056	-.189	-.648
140	153	-.349	.057	-.185	-.602
140	154	-.352	.058	-.173	-.644
140	155	-.359	.059	-.181	-.622
140	156	-.577	.087	-.350	-1.071
140	157	-.562	.077	-.299	-1.022
140	158	-.570	.073	-.258	-.955
140	159	-.566	.073	-.370	-1.067
140	160	-.369	.071	-.171	-.717
140	161	-.582	.071	-.378	-.856
140	162	-.586	.082	-.334	-1.017
140	163	-.579	.080	-.362	-1.016
140	164	-.564	.070	-.358	-1.017
140	165	-.592	.077	-.391	-1.153
140	166	-.567	.072	-.287	-.945
140	167	-.478	.065	-.178	-.782
140	168	-.557	.064	-.370	-.820
140	169	-.576	.066	-.378	-.861
140	170	-.371	.073	-.093	-.706
140	171	-.563	.115	-.258	-1.355
140	201	-.388	.112	.062	-.873
140	202	-.626	.151	-.174	-1.262
140	203	-.502	.135	-.014	-1.168
140	204	-.525	.131	-.111	-1.178
140	205	-.521	.183	.141	-1.575
140	206	-.440	.134	.094	-1.211
140	207	-.452	.156	.041	-1.319
140	208	-.481	.101	-.167	-1.346
140	209	-.475	.105	-.148	-1.598
140	210	-.486	.110	-.115	-1.798
140	211	-.546	.124	-.145	-1.822
140	212	-.521	.145	-.056	-1.501
140	213	-.473	.127	.034	-1.006
140	214	-.673	.085	-.450	-1.099
140	215	-.416	.077	-.196	-.798
140	216	-.459	.079	-.232	-.799
140	217	-.435	.078	-.215	-.828
140	218	-.471	.090	-.244	-.954
140	219	-.464	.088	-.110	-.898
140	220	-.453	.112	.150	-1.195
140	221	-.476	.132	.231	-1.313
140	222	-.482	.089	-.164	-.928
140	223	-.626	.097	-.324	-1.006
140	224	-.485	.101	-.194	-.963
140	225	-.739	.106	-.468	-1.239
140	225	-.739	.106	-.468	-1.239
140	226	-.559	.122	-.288	-1.227
140	227	-.532	.096	-.234	-1.006
140	228	-.501	.114	-.050	-1.054
140	229	-.541	.136	-.056	-1.149
140	230	-.757	.135	-.408	-1.309
140	232	-.664	.116	-.181	-1.379
140	233	-.841	.145	-.492	-1.673
140	234	-.595	.127	-.263	-1.198
140	235	-.589	.134	-.280	-1.427
140	236	-.510	.110	-.101	-1.339
140	237	-.720	.120	-.344	-1.392
140	239	-.377	.096	.143	-.842
140	240	-.400	.112	-.075	-.973
140	241	-.333	.122	.044	-.985
140	242	-.457	.144	.024	-1.179
140	243	-.720	.133	-.326	-1.416
140	244	-.586	.133	-.252	-1.385
140	245	-.510	.110	-.203	-1.160
140	249	-.609	.127	-.310	-1.216
140	250	-.627	.113	-.284	-1.155
140	252	-.372	.116	-.002	-1.058
140	253	-.552	.107	-.164	-1.144
140	254	-.275	.114	.070	-.857
140	255	-.444	.082	-.159	-.894
140	256	-.365	.108	.002	-.933
140	257	-.445	.098	-.087	-.908
140	258	-.536	.099	-.280	-1.085
140	259	-.333	.061	-.155	-.604
140	260	-.487	.079	-.250	-.873

APPENDIX A -- PRESSURE DATA: BASS BROTHERS BUILDING - PHASE I, DALLAS, TEXAS -- CONFIGURATION A

WD	TAP	CPMEAN	CPRMS	CPMAX	CPMIN
140	261	-.057	.089	.334	-.384
140	262	-.836	.197	-.370	-1.647
140	263	-.581	.123	-.307	-1.259
140	264	-.746	.108	-.413	-1.194
140	265	-.686	.106	-.303	-1.130
140	266	-.534	.057	-.331	-.786
140	267	-.466	.116	.031	-1.069
140	268	-.515	.094	-.083	-1.127
140	269	-.521	.089	-.231	-.989
140	270	-.090	.076	.206	-.298
140	271	-.683	.118	-.390	-1.234
140	272	-.562	.092	-.315	-.976
140	273	-.591	.083	-.386	-1.045
140	280	-.307	.137	.226	-.910
140	301	.075	.211	.802	-.530
140	302	.123	.148	.657	-.426
140	303	.362	.160	.893	-.193
140	304	.278	.139	.729	-.134
140	305	.036	.110	.483	-.370
140	306	-.334	.177	.448	-1.081
140	307	-.361	.163	.397	-.944
140	308	-.024	.164	.543	-.617
140	309	-.262	.118	.157	-.672
140	310	-.419	.116	.123	-.818
140	311	.357	.147	.915	-.094
140	312	.178	.178	.853	-.502
140	313	.094	.145	.577	-.365
140	314	.460	.186	1.011	-.290
140	315	.465	.187	1.021	-.297
140	316	.257	.177	.897	-.659
140	317	-.014	.147	.635	-.589
140	318	.103	.154	.699	-.342
140	319	.427	.162	.963	-.043
140	320	.399	.158	.989	-.069
140	321	.429	.162	.962	-.058
140	322	-.011	.143	.688	-.800
140	323	.302	.148	.945	-.128
140	324	.056	.142	.573	-.554
140	325	.393	.170	.945	-.195
140	326	.455	.157	1.003	.024
140	327	.366	.181	1.050	-.238
140	328	.514	.168	1.100	-.059
140	329	.420	.179	1.053	-.251
140	330	.339	.167	.892	-.211
140	331	-.058	.145	.444	-.873
140	332	.355	.159	.946	-.192
140	333	.476	.156	1.111	.027
140	334	.483	.156	1.039	.008
140	335	.488	.156	1.006	.032
140	336	.469	.160	1.058	.040

WD	TAP	CPMEAN	CPRMS	CPMAX	CPMIN
140	337	.400	.152	1.018	-.012
140	338	.266	.143	.862	-.163
140	339	.056	.109	.521	-.278
140	340	-.175	.149	.314	-1.087
140	341	.265	.140	.761	-.210
140	342	.402	.139	.964	.038
140	343	.402	.138	.950	.039
140	344	.384	.138	.828	-.027
140	345	.382	.143	.872	-.036
140	346	.318	.140	.823	-.088
140	347	.196	.129	.672	-.195
140	348	.033	.107	.574	-.310
140	349	-.223	.138	.293	-.833
140	350	.163	.133	.739	-.295
140	352	.296	.128	.851	-.048
140	353	.303	.139	.914	-.041
140	354	.271	.140	.871	-.076
140	355	.261	.142	.875	-.120
140	359	-.085	.195	.659	-1.079
140	360	-.298	.152	.309	-1.183
140	361	.161	.105	.661	-.180
140	362	.107	.177	.840	-1.281
140	363	.080	.225	.858	-1.322
140	364	.126	.229	.831	-.868
140	365	-.116	.249	.708	-1.556
140	366	-.588	.215	.294	-1.422
140	367	.009	.238	.723	-1.450
140	368	-.379	.089	-.080	-.758
140	369	-.032	.091	.409	-.377
140	370	.198	.121	.789	-.148
140	371	.183	.101	.784	-.440
140	372	.185	.107	.794	-.208
140	373	-.064	.165	.729	-.574
140	374	.177	.123	.911	-.178
140	375	.319	.156	1.020	-.065
140	376	-.205	.106	.209	-.629
140	377	-.129	.116	.348	-.605
140	378	-.022	.103	.507	-.516
140	379	-.032	.094	.370	-.289
140	380	.266	.177	1.148	-.113
140	381	.141	.103	.576	-.169
140	382	-.271	.131	.391	-.903
140	383	-.433	.136	.113	-.970
140	384	-.148	.180	.393	-1.117
140	385	-.589	.198	.324	-1.327
140	386	-.309	.098	.129	-.740
140	387	-.399	.166	.399	-1.186
140	388	-.477	.134	.089	-1.107
140	389	.068	.117	.658	-.288
140	390	-.123	.124	.571	-.417

WD	TAP	CPMEAN	CPRMS	CPMAX	CPMIN
140	391	-.216	.136	.474	-.681
140	392	-.724	.166	-.213	-1.512
140	393	-.566	.088	-.238	-1.029
140	401	-.332	.090	-.050	-.873
140	402	-.360	.094	-.028	-.881
140	403	-.640	.125	-.231	-1.151
140	404	-.753	.150	-.254	-1.543
140	405	-.423	.109	-.116	-.887
140	406	-1.001	.165	-.486	-1.615
140	407	-.735	.132	-.350	-1.248
140	408	-.613	.155	.059	-1.506
140	409	-.548	.176	.094	-1.442
140	410	-.548	.191	.218	-1.403
140	411	-.745	.160	-.183	-2.315
140	412	-.744	.135	-.344	-1.431
140	413	-.763	.136	-.368	-1.458
140	414	-.764	.273	.304	-1.754
140	415	-1.259	.423	.097	-2.564
140	416	-.498	.145	-.064	-1.471
140	417	-.545	.133	-.168	-1.344
140	418	-.598	.128	-.224	-1.162
140	419	-.577	.232	.217	-1.538
140	420	-.585	.225	.123	-1.614
140	421	-.813	.179	-.346	-1.609
140	422	-.858	.204	-.331	-1.752
140	423	-.917	.221	-.323	-1.933
140	424	-.453	.207	.138	-1.501
140	425	-.481	.189	.183	-1.326
140	426	-.477	.155	.259	-1.138
140	427	-.444	.112	.185	-.856
140	428	-.492	.123	.065	-1.094
140	429	-.724	.124	-.340	-1.332
140	430	-.485	.104	-.192	-1.064
140	431	-.471	.099	-.158	-.960
140	432	-.446	.093	-.165	-.920
140	433	-.415	.164	.067	-1.333
140	434	-.439	.176	.240	-1.120
140	435	-.451	.164	.171	-1.098
140	436	-.440	.130	.039	-.965
140	437	-.546	.151	-.031	-1.240
140	438	-.568	.149	-.162	-1.381
140	439	-.797	.112	-.480	-1.235
140	440	-.521	.125	-.214	-1.119
140	441	-.499	.123	-.196	-1.127
140	442	-.774	.216	-.215	-1.880
140	443	-.561	.160	-.162	-1.430
140	444	-.589	.186	.019	-1.543
140	445	-.606	.199	-.082	-1.699
140	446	-.610	.211	-.089	-1.645
140	447	-.692	.231	-.051	-1.837

APPENDIX A -- PRESSURE DATA: BASS BROTHERS BUILDING - PHASE I, DALLAS, TEXAS -- CONFIGURATION A

WD	TAP	CPMEAN	CPRMS	CPMAX	CPMIN
140	449	-.435	.113	.155	-.847
140	450	-.375	.109	.093	-.947
140	451	-.661	.133	.105	-1.259
140	452	-.812	.200	-.323	-2.109
140	453	-.859	.267	-.099	-2.035
140	454	-.361	.068	-.130	-.751
140	455	-.440	.091	.152	-.803
140	456	-.312	.101	.366	-.845
140	457	-.382	.106	.089	-.868
140	458	-.447	.114	-.100	-.904
140	459	-.550	.156	-.138	-1.309
140	460	-.559	.154	-.085	-1.209
140	461	-.786	.235	-.297	-2.067
140	462	-.399	.070	-.211	-.754
140	463	-.311	.082	.100	-.628
140	464	-.547	.113	-.189	-.930
140	465	-.833	.171	-.424	-1.595
140	466	-.363	.058	-.209	-.608
140	467	-.307	.096	.168	-.718
140	468	-.357	.070	-.137	-.705
140	469	-.641	.093	-.401	-1.066
140	470	-.519	.177	-.076	-1.281
140	471	-.646	.211	-.106	-1.609
140	472	-.568	.065	-.334	-.866
140	473	-.497	.066	-.310	-.814
140	474	-.604	.092	-.223	-1.094
140	475	-.701	.131	-.321	-1.409
140	476	-.770	.158	-.322	-1.419
140	477	-.618	.126	-.177	-1.077
140	478	-1.027	.281	-.092	-2.072
140	479	-.565	.075	-.291	-1.069
140	480	-.633	.103	-.347	-1.146
140	481	-.696	.098	-.405	-1.196
140	482	-.764	.137	-.430	-1.354
140	483	-.881	.147	-.488	-1.639
140	484	-.770	.151	-.303	-1.520
140	702	-.478	.124	-.160	-1.077
140	703	-.398	.115	-.027	-.966
140	704	-.304	.150	.754	-1.156
140	801	-.371	.109	-.007	-1.111
140	802	-.424	.105	-.124	-1.173
140	803	-.350	.135	.225	-.872
140	804	-.491	.108	-.136	-1.104
140	805	-.339	.121	.181	-.752
140	806	-.451	.101	-.194	-1.173
140	807	-.526	.115	-.201	-1.105
140	808	-.651	.109	-.317	-1.013
140	809	-.525	.120	-.153	-1.144
140	810	-.508	.148	.130	-1.067
140	811	-.721	.135	-.219	-1.205

WD	TAP	CPMEAN	CPRMS	CPMAX	CPMIN
140	905	-.478	.064	-.164	-.848
140	906	-.466	.064	-.291	-.787
140	907	-.599	.078	-.241	-1.019
140	908	-.568	.071	-.385	-.993
140	909	-.564	.119	-.223	-1.090
140	910	-.531	.094	-.233	-.925
140	911	-.537	.090	-.208	-.984
140	912	-.164	.057	.035	-.437
140	913	-.255	.104	.171	-.750
140	915	-.612	.187	-.157	-1.839
150	101	-.283	.061	-.094	-.654
150	102	-.295	.074	-.061	-.803
150	103	-.346	.097	-.085	-.818
150	104	-.333	.090	-.073	-.845
150	105	-.310	.068	-.089	-.713
150	106	-.320	.059	-.108	-.549
150	107	-.293	.054	-.101	-.585
150	108	-.306	.071	-.089	-.739
150	109	-.308	.072	-.093	-.693
150	110	-.344	.098	-.033	-.896
150	111	-.316	.075	-.064	-.832
150	112	-.317	.051	-.178	-.572
150	113	-.305	.046	-.167	-.467
150	114	-.292	.045	-.159	-.490
150	115	-.285	.053	-.132	-.549
150	116	-.368	.072	-.100	-.686
150	117	-.319	.053	-.133	-.534
150	118	-.313	.045	-.160	-.500
150	119	-.300	.041	-.133	-.441
150	120	-.296	.045	-.147	-.459
150	121	-.299	.050	-.150	-.523
150	122	-.316	.064	-.110	-.821
150	123	-.299	.064	-.056	-.701
150	124	-.398	.070	-.155	-.774
150	125	-.325	.053	-.083	-.561
150	126	-.311	.044	-.101	-.497
150	127	-.308	.037	-.167	-.486
150	128	-.313	.047	-.148	-.546
150	129	-.463	.059	-.277	-.697
150	130	-.320	.063	-.113	-.606
150	131	-.335	.067	-.108	-.712
150	133	-.334	.067	-.059	-.667
150	134	-.322	.060	-.096	-.556
150	135	-.332	.057	-.108	-.583
150	136	-.354	.051	-.188	-.653
150	137	-.379	.049	-.248	-.615
150	139	-.485	.056	-.325	-.737
150	140	-.333	.074	-.098	-.718
150	141	-.335	.066	-.083	-.652
150	142	-.332	.058	-.129	-.579

WD	TAP	CPMEAN	CPRMS	CPMAX	CPMIN
150	143	-.358	.053	-.128	-.593
150	144	-.370	.057	-.246	-.664
150	145	-.367	.051	-.251	-.585
150	146	-.350	.053	-.220	-.660
150	147	-.505	.057	-.350	-.739
150	148	-.487	.080	-.197	-.821
150	149	-.488	.083	-.252	-.831
150	150	-.468	.061	-.177	-.701
150	151	-.527	.062	-.280	-.911
150	152	-.372	.044	-.226	-.567
150	153	-.343	.050	-.197	-.622
150	154	-.345	.046	-.199	-.547
150	155	-.360	.051	-.226	-.583
150	156	-.613	.087	-.328	-.981
150	157	-.579	.074	-.245	-.996
150	158	-.593	.064	-.424	-1.039
150	159	-.578	.063	-.385	-.928
150	160	-.363	.053	-.197	-.700
150	161	-.605	.064	-.395	-.979
150	162	-.608	.083	-.363	-1.203
150	163	-.614	.080	-.302	-1.219
150	164	-.583	.062	-.393	-.901
150	165	-.624	.068	-.442	-.984
150	166	-.588	.076	-.188	-.952
150	167	-.490	.062	-.206	-.782
150	168	-.577	.054	-.400	-.849
150	169	-.610	.056	-.444	-.865
150	170	-.374	.070	-.040	-.612
150	171	-.567	.101	-.256	-1.024
150	201	-.315	.115	.153	-.711
150	202	-.544	.134	-.173	-1.088
150	203	-.425	.103	-.054	-.903
150	204	-.415	.099	-.021	-1.274
150	205	-.458	.133	-.003	-1.469
150	206	-.375	.098	-.091	-.920
150	207	-.395	.120	-.075	-1.152
150	208	-.395	.070	-.157	-.711
150	209	-.388	.071	-.144	-.720
150	210	-.394	.072	-.150	-.732
150	211	-.420	.079	-.191	-.842
150	212	-.471	.116	-.176	-1.267
150	213	-.433	.096	-.125	-.981
150	214	-.613	.065	-.440	-.968
150	215	-.378	.059	-.196	-.611
150	216	-.390	.057	-.233	-.613
150	217	-.389	.056	-.204	-.597
150	218	-.409	.060	-.230	-.643
150	219	-.403	.059	-.214	-.682
150	220	-.422	.083	-.181	-.872
150	221	-.439	.094	-.182	-.992

APPENDIX A -- PRESSURE DATA: BASS BROTHERS BUILDING - PHASE I, DALLAS, TEXAS -- CONFIGURATION A

WD	TAP	CPMEAN	CPRMS	CPMAX	CPMIN
150	222	-.447	.073	-.226	-.747
150	223	-.571	.076	-.332	-1.029
150	224	-.442	.079	-.167	-.800
150	225	-.699	.086	-.457	-1.116
150	225	-.699	.086	-.457	-1.116
150	226	-.501	.100	-.223	-1.333
150	227	-.488	.083	-.266	-1.058
150	228	-.468	.087	-.211	-.917
150	229	-.498	.098	-.213	-.967
150	230	-.665	.109	-.343	-1.509
150	232	-.674	.092	-.427	-1.328
150	233	-.778	.116	-.473	-1.430
150	234	-.522	.102	-.255	-1.091
150	235	-.538	.131	-.258	-1.920
150	236	-.487	.096	-.200	-.937
150	237	-.712	.099	-.454	-1.154
150	239	-.380	.082	-.069	-.841
150	240	-.391	.094	-.073	-.898
150	241	-.340	.134	-.009	-1.084
150	242	-.430	.144	-.042	-1.448
150	243	-.627	.112	-.363	-1.180
150	244	-.526	.111	-.181	-1.076
150	245	-.482	.089	-.197	-.882
150	249	-.559	.112	-.296	-1.096
150	250	-.664	.108	-.322	-1.120
150	252	-.365	.137	.055	-1.083
150	253	-.503	.107	-.181	-1.163
150	254	-.267	.101	.082	-.690
150	255	-.433	.082	-.127	-.859
150	256	-.375	.096	.052	-.893
150	257	-.473	.092	-.075	-.826
150	258	-.535	.091	-.270	-.942
150	259	-.321	.057	-.138	-.653
150	260	-.485	.083	-.276	-.927
150	261	-.059	.077	.305	-.352
150	262	-.868	.209	-.265	-2.009
150	263	-.554	.123	-.238	-1.201
150	264	-.741	.102	-.437	-1.204
150	265	-.699	.107	-.398	-1.142
150	266	-.535	.048	-.412	-.767
150	267	-.483	.110	-.015	-1.006
150	268	-.523	.084	-.060	-.854
150	269	-.525	.081	-.252	-.868
150	270	-.112	.068	.201	-.280
150	271	-.737	.112	-.455	-1.217
150	272	-.547	.085	-.334	-.889
150	273	-.607	.074	-.304	-1.064
150	280	-.322	.113	.189	-.860
150	301	.096	.216	.801	-.531
150	302	.248	.165	.920	-.287
150	303	.379	.156	.874	-.186
150	304	.282	.145	.840	-.178
150	305	.035	.104	.493	-.266
150	306	-.315	.125	.116	-.835
150	307	-.340	.117	.226	-.927
150	308	-.038	.150	.499	-.590
150	309	-.169	.114	.402	-.505
150	310	-.304	.121	.314	-.658
150	311	.366	.160	.890	-.124
150	312	.149	.171	.707	-.414
150	313	.214	.171	.890	-.356
150	314	.404	.210	1.109	-.219
150	315	.392	.207	1.044	-.241
150	316	.222	.187	.876	-.360
150	317	.131	.171	.769	-.448
150	318	.166	.189	.831	-.386
150	319	.412	.175	1.030	-.043
150	320	.389	.168	.941	-.061
150	321	.414	.167	.963	-.082
150	322	-.036	.143	.625	-.555
150	323	.295	.159	.824	-.353
150	324	.089	.169	.742	-.622
150	325	.405	.183	1.051	-.156
150	326	.420	.172	1.066	-.018
150	327	.386	.206	1.071	-.132
150	328	.448	.168	.953	-.031
150	329	.347	.181	.967	-.401
150	330	.289	.163	.915	-.207
150	331	-.054	.153	.560	-.875
150	332	.301	.171	.949	-.193
150	333	.390	.158	.942	-.012
150	334	.415	.163	1.139	.005
150	335	.421	.163	1.107	-.005
150	336	.397	.164	1.121	-.046
150	337	.340	.158	1.102	-.093
150	338	.239	.143	.761	-.223
150	339	.060	.112	.525	-.335
150	340	-.182	.150	.375	-1.104
150	341	.142	.133	.742	-.248
150	342	.252	.124	.762	-.076
150	343	.253	.123	.771	-.049
150	344	.263	.130	.911	-.079
150	345	.268	.137	.838	-.111
150	346	.216	.140	.789	-.200
150	347	.118	.135	.796	-.297
150	348	-.003	.116	.462	-.376
150	349	-.223	.141	.247	-.975
150	350	.066	.114	.489	-.405
150	352	.185	.101	.672	-.127
150	353	.202	.113	.679	-.113
150	354	.173	.115	.681	-.139
150	355	.161	.119	.664	-.163
150	359	-.123	.166	.533	-.936
150	360	-.328	.154	.108	-1.293
150	361	.100	.086	.398	-.254
150	362	.031	.175	.499	-1.046
150	363	-.014	.246	.571	-1.812
150	364	.004	.249	.544	-1.463
150	365	-.181	.281	.509	-1.756
150	366	-.567	.199	.149	-1.351
150	367	-.091	.279	.643	-1.425
150	368	-.323	.084	-.046	-.681
150	369	-.038	.080	.320	-.285
150	370	.132	.107	.685	-.258
150	371	.127	.085	.427	-.372
150	372	.123	.090	.463	-.758
150	373	-.104	.142	.389	-.999
150	374	.109	.103	.678	-.193
150	375	.248	.140	.927	-.193
150	376	-.219	.103	.215	-.723
150	377	-.184	.126	.324	-1.041
150	378	-.061	.106	.412	-.513
150	379	-.096	.081	.297	-.373
150	380	.185	.173	1.279	-.194
150	381	.115	.093	.587	-.170
150	382	-.234	.119	.192	-.754
150	383	-.426	.119	-.016	-1.058
150	384	-.192	.184	.361	-1.283
150	385	-.520	.216	.245	-1.509
150	386	-.335	.082	-.001	-.636
150	387	-.369	.157	.209	-1.174
150	388	-.440	.118	-.035	-1.041
150	389	-.000	.100	.386	-.457
150	390	-.155	.103	.531	-.416
150	391	-.238	.114	.290	-.600
150	392	-.718	.142	-.333	-1.486
150	393	-.574	.078	-.281	-.948
150	401	-.286	.067	-.047	-.592
150	402	-.272	.068	-.004	-.583
150	403	-.518	.094	-.169	-1.023
150	404	-.656	.158	-.112	-1.580
150	405	-.332	.095	-.071	-.883
150	406	-.807	.189	-.129	-1.496
150	407	-.641	.127	-.201	-1.194
150	408	-.586	.121	-.214	-1.174
150	409	-.282	.178	.517	-1.149
150	410	-.204	.230	.701	-1.295
150	411	-.571	.197	.128	-1.454
150	412	-.715	.147	-.259	-1.553
150	413	-.747	.146	-.306	-1.473

APPENDIX A -- PRESSURE DATA: BASS BROTHERS BUILDING - PHASE I, DALLAS, TEXAS -- CONFIGURATION A

WD	TAP	CPMEAN	CPRMS	CPMAX	CPMIN
150	414	-.440	.288	.451	-1.690
150	415	-.708	.412	.237	-2.144
150	416	-.322	.176	.306	-1.072
150	417	-.517	.175	.027	-1.328
150	418	-.587	.154	-.116	-1.267
150	419	-.421	.291	.507	-1.843
150	420	-.353	.285	.430	-1.535
150	421	-.811	.199	-.270	-1.873
150	422	-.782	.199	-.184	-1.700
150	423	-.812	.197	-.293	-1.732
150	424	-.345	.119	.074	-.973
150	425	-.271	.171	.376	-1.071
150	426	-.236	.218	.569	-.962
150	427	-.264	.187	.510	-.894
150	428	-.377	.163	.083	-.994
150	429	-.769	.164	-.244	-1.444
150	430	-.551	.146	-.033	-1.352
150	431	-.560	.142	-.129	-1.376
150	432	-.534	.133	-.143	-1.090
150	433	-.353	.094	-.017	-1.006
150	434	-.304	.149	.349	-1.053
150	435	-.275	.167	.434	-1.054
150	436	-.286	.143	.305	-.961
150	437	-.406	.160	.159	-1.121
150	438	-.481	.166	.009	-1.132
150	439	-.764	.112	-.486	-1.146
150	440	-.485	.146	-.091	-1.526
150	441	-.461	.141	-.108	-1.450
150	442	-.683	.203	-.174	-1.758
150	443	-.496	.176	-.005	-1.581
150	444	-.484	.179	-.075	-1.525
150	445	-.446	.158	-.140	-1.341
150	446	-.454	.172	-.114	-1.314
150	447	-.545	.204	-.119	-1.795
150	449	-.405	.115	.269	-.855
150	450	-.301	.102	.100	-.833
150	451	-.564	.126	.054	-1.129
150	452	-.684	.196	-.257	-1.634
150	453	-.758	.248	-.056	-1.998
150	454	-.386	.073	-.177	-.810
150	455	-.417	.105	.254	-.864
150	456	-.268	.109	.409	-.776
150	457	-.309	.106	.161	-.790
150	458	-.343	.097	-.078	-.732
150	459	-.418	.137	-.101	-1.046
150	460	-.402	.126	-.106	-1.044
150	461	-.674	.232	-.188	-2.025
150	462	-.411	.070	-.205	-.760
150	463	-.304	.061	-.042	-.617
150	464	-.462	.110	-.141	-1.081
150	465	-.698	.154	-.307	-1.547
150	466	-.354	.049	-.207	-.553
150	467	-.292	.069	-.019	-.565
150	468	-.316	.056	-.159	-.662
150	469	-.581	.082	-.368	-.984
150	470	-.449	.140	-.131	-1.121
150	471	-.562	.173	-.145	-1.692
150	472	-.582	.058	-.419	-.831
150	473	-.498	.060	-.346	-.819
150	474	-.580	.076	-.343	-.940
150	475	-.628	.109	-.363	-1.294
150	476	-.664	.130	-.288	-1.289
150	477	-.552	.105	-.212	-1.029
150	478	-.922	.245	-.195	-2.053
150	479	-.577	.062	-.388	-.869
150	480	-.622	.091	-.413	-1.155
150	481	-.678	.087	-.429	-1.135
150	482	-.730	.127	-.400	-1.308
150	483	-.819	.132	-.425	-1.377
150	484	-.682	.118	-.302	-1.269
150	702	-.362	.100	-.131	-.848
150	703	-.299	.096	-.042	-.741
150	704	-.287	.187	.668	-1.111
150	801	-.250	.100	.082	-.765
150	802	-.385	.098	-.057	-.919
150	803	-.308	.109	.137	-.951
150	804	-.449	.104	-.079	-1.070
150	805	-.322	.091	.063	-.644
150	806	-.418	.093	-.156	-.976
150	807	-.483	.103	-.120	-.956
150	808	-.532	.116	-.155	-.965
150	809	-.454	.096	-.152	-1.113
150	810	-.427	.143	.127	-.952
150	811	-.624	.151	-.040	-1.198
150	905	-.474	.063	-.181	-.875
150	906	-.460	.056	-.302	-.745
150	907	-.620	.079	-.299	-.984
150	908	-.608	.060	-.434	-.838
150	909	-.456	.103	-.188	-.864
150	910	-.533	.080	-.194	-.832
150	911	-.482	.080	-.261	-.866
150	912	-.147	.051	.023	-.386
150	913	-.264	.086	.108	-.596
150	915	-.561	.168	-.164	-1.480
160	101	-.263	.053	-.102	-.601
160	102	-.261	.059	-.071	-.635
160	103	-.306	.088	-.073	-.759
160	104	-.313	.081	-.096	-.724
160	105	-.285	.063	-.090	-.606
160	106	-.278	.056	-.061	-.784
160	107	-.280	.050	-.116	-.540
160	108	-.276	.060	-.090	-.565
160	109	-.267	.058	-.052	-.584
160	110	-.291	.082	-.078	-.950
160	111	-.279	.071	-.083	-.836
160	112	-.281	.053	-.142	-.550
160	113	-.275	.044	-.126	-.504
160	114	-.264	.042	-.135	-.503
160	115	-.261	.046	-.132	-.546
160	116	-.309	.054	-.122	-.579
160	117	-.285	.043	-.116	-.473
160	118	-.292	.038	-.140	-.441
160	119	-.278	.038	-.154	-.420
160	120	-.271	.040	-.122	-.428
160	121	-.275	.042	-.139	-.454
160	122	-.287	.047	-.147	-.484
160	123	-.278	.049	-.135	-.606
160	124	-.357	.058	-.142	-.596
160	125	-.315	.050	-.093	-.543
160	126	-.310	.045	-.130	-.503
160	127	-.316	.040	-.184	-.472
160	128	-.305	.040	-.161	-.456
160	129	-.472	.048	-.325	-.702
160	130	-.299	.045	-.163	-.536
160	131	-.315	.048	-.169	-.581
160	133	-.340	.064	-.062	-.637
160	134	-.320	.057	-.069	-.562
160	135	-.328	.051	-.097	-.624
160	136	-.335	.048	-.145	-.629
160	137	-.358	.045	-.242	-.608
160	139	-.477	.053	-.320	-.800
160	140	-.317	.061	-.049	-.577
160	141	-.345	.064	.095	-.689
160	142	-.327	.051	-.118	-.575
160	143	-.353	.046	-.206	-.565
160	144	-.331	.050	-.202	-.602
160	145	-.331	.045	-.203	-.550
160	146	-.320	.048	-.200	-.747
160	147	-.501	.057	-.333	-.901
160	148	-.468	.071	-.232	-.854
160	149	-.461	.069	-.204	-.825
160	150	-.461	.055	-.253	-.809
160	151	-.513	.063	-.294	-.848
160	152	-.347	.046	-.198	-.539
160	153	-.307	.047	-.152	-.665
160	154	-.312	.046	-.168	-.538
160	155	-.331	.047	-.189	-.613
160	156	-.584	.084	-.337	-1.220
160	157	-.548	.068	-.143	-.984
160	158	-.585	.067	-.274	-1.022

APPENDIX A -- PRESSURE DATA: BASS BROTHERS BUILDING - PHASE I, DALLAS, TEXAS -- CONFIGURATION A

WD	TAP	CPMEAN	CPRMS	CPMAX	CPMIN
160	159	-.549	.061	-.369	-.859
160	160	-.321	.053	-.150	-.562
160	161	-.579	.062	-.399	-.949
160	162	-.554	.072	-.354	-1.062
160	163	-.575	.069	-.374	-1.022
160	164	-.543	.053	-.384	-.864
160	165	-.577	.056	-.404	-.889
160	166	-.545	.063	-.297	-.881
160	167	-.475	.059	-.250	-.884
160	168	-.545	.054	-.406	-.906
160	169	-.577	.054	-.436	-.873
160	170	-.288	.064	-.062	-.523
160	171	-.368	.076	-.124	-.714
160	201	-.211	.119	.293	-.766
160	202	-.442	.113	-.127	-.997
160	203	-.344	.098	.034	-.986
160	204	-.370	.104	-.033	-.962
160	205	-.387	.129	.023	-1.191
160	206	-.317	.088	-.037	-.946
160	207	-.335	.104	.049	-.905
160	208	-.339	.075	-.140	-.791
160	209	-.327	.075	-.122	-.784
160	210	-.332	.077	-.123	-.827
160	211	-.364	.088	-.155	-1.095
160	212	-.394	.113	-.118	-1.290
160	213	-.362	.092	-.047	-.882
160	214	-.555	.069	-.369	-.953
160	215	-.333	.065	-.109	-.686
160	216	-.350	.062	-.143	-.705
160	217	-.343	.061	-.146	-.625
160	218	-.366	.064	-.166	-.656
160	219	-.358	.062	-.181	-.715
160	220	-.378	.079	-.108	-.926
160	221	-.400	.095	-.084	-1.033
160	222	-.418	.075	-.192	-.749
160	223	-.545	.078	-.310	-.926
160	224	-.408	.075	-.178	-.835
160	225	-.669	.089	-.446	-1.066
160	225	-.669	.089	-.446	-1.066
160	226	-.453	.088	-.214	-1.045
160	227	-.428	.078	-.232	-.967
160	228	-.401	.071	-.192	-.761
160	229	-.422	.083	-.201	-.902
160	230	-.607	.104	-.348	-1.321
160	232	-.599	.076	-.325	-.953
160	233	-.702	.115	-.433	-2.041
160	234	-.441	.095	-.204	-1.126
160	235	-.438	.103	-.216	-1.043
160	236	-.395	.070	-.196	-.773
160	237	-.623	.079	-.400	-1.006

WD	TAP	CPMEAN	CPRMS	CPMAX	CPMIN
160	239	-.340	.065	-.122	-.654
160	240	-.360	.074	-.150	-.872
160	241	-.383	.114	-.081	-1.059
160	242	-.388	.112	-.123	-1.338
160	243	-.587	.114	-.322	-1.463
160	244	-.432	.092	-.206	-.881
160	245	-.402	.069	-.165	-.826
160	249	-.547	.106	-.270	-1.263
160	250	-.600	.086	-.264	-1.081
160	252	-.361	.091	-.122	-.964
160	253	-.485	.103	-.127	-.979
160	254	-.275	.075	.041	-.734
160	255	-.369	.067	-.148	-.781
160	256	-.401	.091	-.098	-.809
160	257	-.470	.084	-.190	-.838
160	258	-.495	.078	-.208	-.852
160	259	-.312	.053	-.160	-.555
160	260	-.416	.069	-.208	-.893
160	261	-.153	.086	.187	-.522
160	262	-.772	.185	-.334	-2.106
160	263	-.536	.104	-.272	-1.006
160	264	-.660	.101	-.394	-1.267
160	265	-.646	.105	-.381	-1.335
160	266	-.534	.043	-.356	-.714
160	267	-.519	.097	.171	-1.032
160	268	-.519	.089	.123	-1.220
160	269	-.490	.080	-.135	-.881
160	270	-.172	.059	.143	-.480
160	271	-.616	.084	-.412	-1.137
160	272	-.517	.077	-.297	-.863
160	273	-.572	.068	-.358	-1.144
160	280	-.369	.112	.113	-.972
160	301	-.026	.215	.771	-.626
160	302	.237	.210	.978	-.344
160	303	.174	.175	.776	-.363
160	304	.119	.145	.606	-.297
160	305	-.033	.108	.420	-.386
160	306	-.311	.117	.148	-.962
160	307	-.308	.110	.148	-.879
160	308	-.131	.189	.515	-.717
160	309	-.124	.127	.340	-.465
160	310	-.225	.138	.400	-.688
160	311	.245	.185	.884	-.271
160	312	-.021	.192	.789	-.620
160	313	.229	.213	1.021	-.577
160	314	.210	.198	.919	-.399
160	315	.192	.192	.873	-.390
160	316	.070	.194	.692	-.490
160	317	.181	.193	.937	-.474
160	318	.114	.220	1.033	-.407

WD	TAP	CPMEAN	CPRMS	CPMAX	CPMIN
160	319	.288	.180	.980	-.148
160	320	.266	.177	.953	-.161
160	321	.300	.189	.992	-.151
160	322	-.089	.174	.546	-.607
160	323	.172	.188	.842	-.399
160	324	.135	.205	.826	-1.153
160	325	.249	.179	.889	-.261
160	326	.287	.169	.989	-.116
160	327	.172	.197	.882	-.295
160	328	.290	.174	.934	-.211
160	329	.184	.226	.837	-1.021
160	330	.162	.193	.790	-.469
160	331	-.007	.167	.614	-.943
160	332	.169	.147	.976	-.300
160	333	.222	.137	.956	-.100
160	334	.227	.136	.859	-.106
160	335	.219	.136	.822	-.132
160	336	.200	.144	.805	-.165
160	337	.165	.151	.771	-.209
160	338	.111	.151	.698	-.253
160	339	-.013	.127	.520	-.364
160	340	-.083	.129	.456	-.767
160	341	.062	.093	.511	-.242
160	342	.107	.091	.540	-.123
160	343	.106	.091	.556	-.121
160	344	.114	.095	.673	-.146
160	345	.109	.110	.652	-.175
160	346	.069	.119	.628	-.213
160	347	-.007	.125	.586	-.327
160	348	-.087	.124	.528	-.439
160	349	-.108	.120	.430	-.943
160	350	.018	.086	.520	-.418
160	352	.070	.075	.526	-.153
160	353	.058	.089	.595	-.185
160	354	.032	.091	.570	-.197
160	355	.019	.096	.601	-.235
160	359	-.017	.094	.511	-.503
160	360	-.227	.113	.111	-.789
160	361	.001	.054	.221	-.181
160	362	-.036	.101	.403	-.836
160	363	-.059	.154	.372	-1.093
160	364	-.100	.176	.338	-1.212
160	365	-.340	.255	.403	-1.919
160	366	-.593	.168	.167	-1.367
160	367	-.235	.201	.303	-1.363
160	368	-.238	.060	.005	-.468
160	369	-.031	.055	.201	-.251
160	370	-.001	.060	.333	-.238
160	371	.008	.065	.337	-.340
160	372	-.036	.070	.262	-.330

APPENDIX A -- PRESSURE DATA: BASS BROTHERS BUILDING - PHASE I, DALLAS, TEXAS -- CONFIGURATION A

WD	TAP	CPMEAN	CPRMS	CPMAX	CPMIN
160	373	-.240	.137	.284	-.714
160	374	.021	.069	.497	-.229
160	375	.043	.077	.493	-.184
160	376	-.177	.076	.062	-.605
160	377	-.229	.078	.127	-.694
160	378	-.131	.068	.162	-.548
160	379	-.155	.066	.227	-.419
160	380	-.021	.141	.907	-.303
160	381	-.068	.077	.266	-.391
160	382	-.304	.141	.393	-1.189
160	383	-.257	.096	.095	-.903
160	384	-.290	.156	.204	-1.315
160	385	-.550	.190	.318	-1.381
160	386	-.273	.072	.111	-.595
160	387	-.423	.150	.215	-1.263
160	388	-.466	.117	.018	-1.116
160	389	-.125	.085	.316	-.473
160	390	-.241	.087	.098	-.501
160	391	-.330	.094	.149	-.609
160	392	-.727	.126	-.290	-1.340
160	393	-.562	.068	-.332	-.861
160	401	-.240	.057	-.024	-.487
160	402	-.238	.066	.032	-.547
160	403	-.449	.081	-.134	-.863
160	404	-.403	.129	.046	-1.570
160	405	-.196	.086	.073	-.638
160	406	-.475	.203	.125	-1.167
160	407	-.393	.135	.122	-1.010
160	408	-.520	.107	-.233	-.995
160	409	-.254	.176	.421	-1.209
160	410	-.201	.229	.758	-1.310
160	411	-.300	.158	.385	-1.047
160	412	-.519	.159	-.040	-1.590
160	413	-.565	.152	-.036	-1.403
160	414	-.082	.275	.692	-1.398
160	415	-.323	.345	.573	-2.220
160	416	-.083	.145	.587	-.713
160	417	-.217	.148	.344	-1.385
160	418	-.317	.134	.114	-.915
160	419	-.107	.277	.653	-1.797
160	420	-.070	.259	.603	-1.399
160	421	-.542	.179	-.079	-1.610
160	422	-.532	.171	-.053	-1.766
160	423	-.562	.167	-.086	-1.520
160	424	-.339	.099	-.099	-.873
160	425	-.166	.091	.139	-.724
160	426	-.052	.135	.487	-.770
160	427	-.036	.145	.549	-.436
160	428	-.114	.114	.191	-.840
160	429	-.415	.162	-.008	-1.114
160	430	-.289	.172	.163	-.993
160	431	-.376	.182	.301	-1.285
160	432	-.383	.152	.303	-1.227
160	433	-.356	.075	-.155	-.699
160	434	-.197	.073	.179	-.588
160	435	-.122	.093	.331	-.629
160	436	-.090	.101	.358	-.603
160	437	-.158	.109	.158	-.978
160	438	-.221	.141	.106	-1.149
160	439	-.484	.105	-.243	-.856
160	440	-.310	.146	.075	-1.111
160	441	-.310	.139	.116	-1.127
160	442	-.390	.156	.078	-1.319
160	443	-.272	.154	.170	-1.149
160	444	-.206	.135	.200	-1.008
160	445	-.180	.086	.065	-.987
160	446	-.181	.089	.028	-1.264
160	447	-.253	.117	.082	-.975
160	449	-.382	.076	.043	-.700
160	450	-.119	.071	.312	-.447
160	451	-.376	.082	-.003	-.772
160	452	-.407	.123	-.024	-1.008
160	453	-.403	.193	.112	-1.722
160	454	-.373	.066	-.166	-.681
160	455	-.371	.076	-.033	-.753
160	456	-.146	.068	.207	-.327
160	457	-.127	.070	.366	-.428
160	458	-.100	.069	.320	-.370
160	459	-.155	.072	.206	-.509
160	460	-.178	.074	.059	-.618
160	461	-.405	.134	.027	-1.501
160	462	-.401	.065	-.165	-.692
160	463	-.213	.062	.106	-.402
160	464	-.284	.070	-.028	-.601
160	465	-.471	.095	-.134	-.928
160	466	-.316	.044	-.120	-.511
160	467	-.166	.061	.103	-.428
160	468	-.192	.040	-.019	-.357
160	469	-.412	.054	-.248	-.682
160	470	-.120	.088	.264	-.611
160	471	-.081	.104	.276	-.702
160	472	-.541	.047	-.366	-.763
160	473	-.456	.048	-.319	-.700
160	474	-.459	.049	-.302	-.737
160	475	-.414	.073	-.207	-1.146
160	476	-.386	.107	.017	-.861
160	477	-.296	.112	.274	-.659
160	478	-.407	.201	.078	-1.270
160	479	-.516	.045	-.358	-.776
160	480	-.443	.069	-.147	-.691
160	481	-.467	.135	.204	-.854
160	482	-.425	.140	.083	-.980
160	483	-.518	.157	-.102	-1.158
160	484	-.395	.188	.320	-1.097
160	702	-.111	.077	.233	-.361
160	703	-.101	.057	.100	-.373
160	704	-.153	.137	.452	-.784
160	801	-.183	.076	.107	-.506
160	802	-.348	.099	.002	-.907
160	803	-.296	.107	.211	-.710
160	804	-.391	.094	-.050	-.827
160	805	-.288	.086	.029	-.718
160	806	-.464	.148	-.103	-1.292
160	807	-.421	.110	-.123	-.966
160	808	-.304	.120	.066	-.870
160	809	-.374	.097	-.100	-.828
160	810	-.346	.161	.219	-1.114
160	811	-.387	.166	.171	-1.107
160	905	-.468	.056	-.193	-.664
160	906	-.426	.048	-.264	-.611
160	907	-.575	.062	-.332	-.860
160	908	-.568	.051	-.425	-.798
160	909	-.263	.074	.197	-.700
160	910	-.536	.070	-.300	-.832
160	911	-.307	.085	-.010	-.670
160	912	-.190	.048	-.017	-.413
160	913	-.304	.070	.039	-.579
160	915	-.261	.128	.085	-1.019
170	101	-.271	.050	-.122	-.532
170	102	-.270	.052	-.094	-.611
170	103	-.301	.087	-.062	-.749
170	104	-.309	.078	-.085	-.672
170	105	-.296	.066	-.064	-.986
170	106	-.285	.066	-.072	-.829
170	107	-.288	.051	-.132	-.554
170	108	-.285	.052	-.110	-.501
170	109	-.279	.051	-.112	-.483
170	110	-.293	.083	-.074	-.928
170	111	-.297	.076	-.097	-.693
170	112	-.293	.052	-.117	-.578
170	113	-.282	.044	-.151	-.562
170	114	-.273	.041	-.139	-.506
170	115	-.265	.040	-.148	-.419
170	116	-.297	.047	-.126	-.480
170	117	-.302	.041	-.167	-.509
170	118	-.309	.037	-.195	-.476
170	119	-.288	.037	-.139	-.405
170	120	-.287	.038	-.151	-.468
170	121	-.286	.041	-.129	-.483
170	122	-.295	.047	-.144	-.518

APPENDIX A -- PRESSURE DATA: BASS BROTHERS BUILDING - PHASE I, DALLAS, TEXAS -- CONFIGURATION A

WD	TAP	CPMEAN	CPRMS	CPMAX	CPMIN
170	123	-.280	.048	-.136	-.494
170	124	-.363	.059	-.150	-.661
170	125	-.350	.055	-.129	-.646
170	126	-.343	.051	-.205	-.616
170	127	-.345	.047	-.217	-.579
170	128	-.331	.043	-.204	-.530
170	129	-.483	.053	-.306	-.653
170	130	-.320	.049	-.162	-.533
170	131	-.336	.052	-.161	-.559
170	133	-.390	.077	-.054	-.806
170	134	-.364	.069	-.117	-.825
170	135	-.379	.062	-.144	-.742
170	136	-.363	.056	-.224	-.685
170	137	-.388	.054	-.230	-.666
170	139	-.485	.058	-.320	-.705
170	140	-.370	.073	-.026	-.916
170	141	-.370	.081	.128	-.947
170	142	-.360	.069	.121	-.938
170	143	-.389	.060	-.208	-.688
170	144	-.354	.054	-.212	-.632
170	145	-.357	.053	-.210	-.600
170	146	-.335	.055	-.168	-.694
170	147	-.491	.061	-.323	-.736
170	148	-.501	.081	-.182	-.959
170	149	-.492	.075	-.210	-.901
170	150	-.501	.069	-.317	-.887
170	151	-.522	.067	-.328	-.883
170	152	-.372	.057	-.208	-.628
170	153	-.328	.058	-.163	-.795
170	154	-.338	.058	-.172	-.591
170	155	-.354	.062	-.178	-.698
170	156	-.592	.088	-.264	-1.131
170	157	-.552	.068	-.297	-.952
170	158	-.568	.064	-.382	-.865
170	159	-.543	.073	-.300	-1.008
170	160	-.330	.063	-.135	-.628
170	161	-.579	.072	-.329	-.878
170	162	-.557	.078	-.309	-1.088
170	163	-.567	.079	-.296	-1.059
170	164	-.556	.055	-.369	-.853
170	165	-.597	.057	-.415	-.914
170	166	-.557	.070	-.162	-1.066
170	167	-.482	.068	-.106	-.936
170	168	-.537	.056	-.331	-.767
170	169	-.585	.056	-.370	-.820
170	170	-.220	.055	.035	-.471
170	171	-.277	.057	-.081	-.500
170	201	-.145	.115	.256	-.597
170	202	-.466	.110	-.136	-1.034
170	203	-.329	.085	-.062	-.729

WD	TAP	CPMEAN	CPRMS	CPMAX	CPMIN
170	204	-.346	.106	-.012	-.892
170	205	-.350	.115	.052	-1.068
170	206	-.302	.083	.027	-1.074
170	207	-.313	.094	.035	-1.053
170	208	-.309	.060	-.129	-.655
170	209	-.299	.057	-.131	-.557
170	210	-.298	.058	-.110	-.571
170	211	-.319	.059	-.134	-.601
170	212	-.330	.083	-.129	-.878
170	213	-.325	.078	-.089	-.760
170	214	-.512	.053	-.345	-.807
170	215	-.310	.055	-.148	-.564
170	216	-.324	.053	-.166	-.562
170	217	-.314	.051	-.165	-.601
170	218	-.326	.052	-.156	-.676
170	219	-.330	.045	-.183	-.543
170	220	-.344	.053	-.195	-.670
170	221	-.351	.066	-.183	-.748
170	222	-.366	.056	-.198	-.662
170	223	-.514	.061	-.326	-.764
170	224	-.374	.062	-.198	-.649
170	225	-.626	.062	-.451	-.906
170	225	-.626	.062	-.451	-.906
170	226	-.390	.071	-.182	-.780
170	227	-.382	.060	-.185	-.681
170	228	-.382	.056	-.222	-.649
170	229	-.385	.065	-.208	-.739
170	230	-.567	.083	-.331	-.999
170	232	-.595	.071	-.369	-1.001
170	233	-.659	.086	-.446	-1.134
170	234	-.415	.091	-.221	-.983
170	235	-.395	.082	-.179	-.851
170	236	-.406	.062	-.189	-.683
170	237	-.612	.074	-.338	-1.102
170	239	-.377	.065	-.155	-.749
170	240	-.402	.073	-.204	-.776
170	241	-.406	.098	-.130	-.935
170	242	-.381	.100	-.181	-1.012
170	243	-.557	.089	-.336	-1.071
170	244	-.405	.077	-.210	-.761
170	245	-.416	.061	-.223	-.711
170	249	-.585	.104	-.316	-1.145
170	250	-.592	.083	-.333	-1.015
170	252	-.458	.101	-.119	-1.023
170	253	-.571	.115	-.227	-1.166
170	254	-.318	.082	.007	-.663
170	255	-.377	.061	-.189	-.774
170	256	-.489	.079	-.210	-.837
170	257	-.521	.091	-.165	-1.083
170	258	-.503	.085	-.142	-1.048

WD	TAP	CPMEAN	CPRMS	CPMAX	CPMIN
170	259	-.340	.060	-.159	-.586
170	260	-.409	.064	-.220	-.776
170	261	-.259	.115	.283	-.607
170	262	-.694	.139	-.317	-1.599
170	263	-.534	.094	-.255	-1.097
170	264	-.615	.086	-.389	-1.008
170	265	-.631	.086	-.398	-1.159
170	266	-.558	.052	-.435	-.815
170	267	-.554	.097	-.201	-1.260
170	268	-.540	.094	-.113	-1.061
170	269	-.506	.092	-.219	-1.363
170	270	-.235	.070	.154	-.458
170	271	-.600	.077	-.390	-1.015
170	272	-.505	.060	-.347	-.887
170	273	-.611	.083	-.309	-1.300
170	280	-.480	.096	-.057	-1.085
170	301	-.061	.182	.669	-.668
170	302	.372	.222	1.237	-.274
170	303	.107	.182	.822	-.645
170	304	.087	.130	.499	-.312
170	305	-.037	.098	.302	-.389
170	306	-.289	.120	.264	-.777
170	307	-.301	.111	.159	-.954
170	308	-.202	.172	.475	-.748
170	309	-.062	.122	.521	-.415
170	310	-.141	.141	.355	-.601
170	311	.288	.207	.998	-.393
170	312	-.096	.185	.812	-.910
170	313	.353	.195	.997	-.218
170	314	.136	.194	.941	-.662
170	315	.141	.184	.943	-.431
170	316	.032	.198	.787	-.597
170	317	.288	.183	1.074	-.193
170	318	.182	.206	1.001	-.414
170	319	.268	.178	1.044	-.130
170	320	.241	.176	.890	-.153
170	321	.285	.190	1.037	-.142
170	322	-.231	.124	.250	-.727
170	323	.049	.194	.902	-.688
170	324	.257	.192	.898	-.321
170	325	.228	.177	.921	-.660
170	326	.278	.163	.895	-.135
170	327	.182	.192	.875	-.307
170	328	.245	.167	1.172	-.174
170	329	.018	.240	1.069	-.919
170	330	.027	.165	.985	-.555
170	331	.110	.146	.643	-.575
170	332	.153	.137	.694	-.333
170	333	.184	.124	.691	-.121
170	334	.194	.129	.955	-.132

APPENDIX A -- PRESSURE DATA: BASS BROTHERS BUILDING - PHASE I, DALLAS, TEXAS -- CONFIGURATION A

WD	TAP	CPMEAN	CPRMS	CPMAX	CPMIN
170	335	.177	.125	.880	-.100
170	336	.145	.127	.767	-.140
170	337	.097	.124	.640	-.279
170	338	.020	.106	.551	-.252
170	339	-.097	.088	.336	-.366
170	340	.012	.091	.462	-.582
170	341	.043	.082	.481	-.269
170	342	.067	.075	.467	-.233
170	343	.066	.077	.489	-.193
170	344	.064	.077	.469	-.137
170	345	.034	.078	.517	-.184
170	346	-.005	.078	.460	-.253
170	347	-.085	.079	.336	-.326
170	348	-.157	.073	.216	-.460
170	349	-.014	.078	.308	-.461
170	350	.001	.062	.442	-.310
170	352	.029	.062	.636	-.162
170	353	-.022	.065	.429	-.241
170	354	-.041	.063	.319	-.228
170	355	-.058	.065	.294	-.263
170	359	.075	.090	.505	-.295
170	360	-.055	.093	.376	-.388
170	361	.036	.057	.334	-.127
170	362	.017	.103	.539	-.598
170	363	-.004	.140	.478	-.990
170	364	-.076	.173	.361	-1.313
170	365	-.471	.192	.045	-1.814
170	366	-.622	.111	-.285	-1.296
170	367	-.306	.142	.045	-1.104
170	368	-.100	.073	.297	-.356
170	369	.046	.065	.329	-.184
170	370	.057	.072	.386	-.144
170	371	.028	.073	.473	-.589
170	372	-.045	.074	.314	-.636
170	373	-.484	.145	.007	-1.201
170	374	.047	.069	.347	-.178
170	375	.070	.073	.368	-.132
170	376	-.086	.083	.289	-.395
170	377	-.230	.059	-.013	-.504
170	378	-.111	.062	.163	-.373
170	379	-.139	.063	.157	-.343
170	380	-.051	.126	.676	-.317
170	381	-.126	.082	.172	-.514
170	382	-.573	.151	-.136	-1.200
170	383	-.171	.074	.189	-.596
170	384	-.363	.166	.086	-1.596
170	385	-.638	.136	-.293	-1.616
170	386	-.236	.104	.088	-.787
170	387	-.594	.134	-.212	-1.441
170	388	-.596	.124	-.245	-1.500
170	389	-.180	.071	.145	-.520
170	390	-.360	.092	-.008	-.577
170	391	-.415	.071	-.060	-.663
170	392	-.735	.129	-.429	-1.292
170	393	-.592	.075	-.362	-.889
170	401	-.237	.056	-.001	-.540
170	402	-.223	.072	.076	-.713
170	403	-.426	.078	-.092	-.919
170	404	-.269	.107	.059	-.729
170	405	-.102	.081	.190	-.453
170	406	-.155	.153	.265	-.896
170	407	-.169	.194	.456	-.906
170	408	-.514	.115	-.195	-1.059
170	409	-.190	.166	.398	-.919
170	410	-.106	.220	.692	-1.007
170	411	-.099	.171	.521	-.587
170	412	-.276	.153	.168	-1.158
170	413	-.358	.167	.298	-1.168
170	414	.190	.224	.900	-.742
170	415	-.001	.230	.596	-1.520
170	416	.088	.162	.769	-.311
170	417	-.013	.154	.541	-.490
170	418	-.119	.139	.499	-.712
170	419	.141	.203	.927	-1.180
170	420	.135	.198	.762	-1.121
170	421	-.316	.182	.200	-1.122
170	422	-.347	.189	.189	-1.308
170	423	-.398	.200	.225	-1.372
170	424	-.373	.110	-.029	-1.112
170	425	-.143	.085	.533	-.546
170	426	.002	.122	.844	-.388
170	427	.084	.131	.664	-.419
170	428	.010	.096	.403	-.468
170	429	-.208	.123	.341	-.781
170	430	-.086	.156	.417	-.943
170	431	-.136	.210	.583	-.825
170	432	-.176	.207	.650	-1.060
170	433	-.388	.081	-.155	-.885
170	434	-.171	.063	.308	-.395
170	435	-.060	.077	.455	-.304
170	436	.012	.087	.531	-.307
170	437	-.029	.075	.440	-.328
170	438	-.055	.088	.426	-.560
170	439	-.259	.094	.106	-.675
170	440	-.107	.146	.423	-.901
170	441	-.126	.158	.496	-.972
170	442	-.130	.117	.572	-.533
170	443	-.066	.127	.433	-.938
170	444	.018	.139	.607	-.871
170	445	-.051	.093	.333	-.477
170	446	-.060	.088	.305	-.574
170	447	-.094	.127	.463	-.745
170	449	-.324	.082	.040	-.641
170	450	.019	.105	.554	-.260
170	451	-.251	.087	.305	-.537
170	452	-.185	.119	.325	-.641
170	453	-.080	.130	.536	-1.109
170	454	-.435	.097	-.139	-.892
170	455	-.288	.072	.099	-.533
170	456	-.038	.105	.571	-.304
170	457	.014	.112	.690	-.267
170	458	.060	.101	.492	-.175
170	459	-.003	.096	.354	-.623
170	460	-.058	.086	.213	-.508
170	461	-.187	.109	.308	-.702
170	462	-.462	.097	-.099	-.942
170	463	-.163	.093	.444	-.401
170	464	-.095	.092	.503	-.326
170	465	-.243	.117	.272	-.671
170	466	-.320	.053	-.093	-.746
170	467	-.114	.090	.271	-.593
170	468	-.138	.057	.114	-.417
170	469	-.286	.053	-.015	-.449
170	470	-.000	.096	.563	-.324
170	471	.024	.102	.504	-.353
170	472	-.504	.056	-.257	-.735
170	473	-.401	.046	-.243	-.670
170	474	-.369	.045	-.208	-.561
170	475	-.294	.058	-.013	-.521
170	476	-.229	.079	.265	-.515
170	477	-.120	.101	.523	-.374
170	478	-.115	.115	.302	-.627
170	479	-.463	.049	-.304	-.691
170	480	-.304	.080	.055	-.537
170	481	-.244	.165	.608	-.645
170	482	-.226	.112	.516	-.609
170	483	-.254	.103	.025	-.941
170	484	-.113	.162	.733	-.666
170	702	.025	.102	.485	-.239
170	703	.010	.084	.543	-.295
170	704	-.087	.073	.304	-.278
170	801	-.181	.069	.058	-.484
170	802	-.348	.116	.201	-.849
170	803	-.308	.104	.196	-.828
170	804	-.386	.107	.008	-.815
170	805	-.289	.082	.146	-.720
170	806	-.632	.176	-.203	-1.282
170	807	-.444	.127	-.141	-1.172
170	808	-.134	.126	.299	-.647
170	809	-.351	.099	-.065	-.883

APPENDIX A -- PRESSURE DATA: BASS BROTHERS BUILDING - PHASE I, DALLAS, TEXAS -- CONFIGURATION A

WD	TAP	CPMEAN	CPRMS	CPMAX	CPMIN
170	810	-.283	.171	.291	-1.101
170	811	-.365	.186	.313	-1.522
170	905	-.494	.068	-.219	-.887
170	906	-.411	.054	-.179	-.669
170	907	-.608	.074	-.312	-1.075
170	908	-.570	.056	-.387	-.838
170	909	-.076	.095	.341	-.321
170	910	-.548	.069	-.286	-.853
170	911	-.206	.071	.182	-.538
170	912	-.233	.059	-.019	-.455
170	913	-.306	.068	.004	-.566
170	915	-.146	.064	.220	-.420
180	101	-.286	.064	-.098	-.824
180	102	-.284	.067	-.071	-.724
180	103	-.316	.091	.006	-.789
180	104	-.322	.087	-.014	-.814
180	105	-.334	.090	-.070	-.991
180	106	-.318	.090	-.005	-1.059
180	107	-.319	.064	-.139	-.623
180	108	-.309	.069	-.094	-.620
180	109	-.302	.067	-.100	-.588
180	110	-.319	.093	-.075	-1.155
180	111	-.316	.096	-.061	-1.110
180	112	-.319	.061	-.164	-.742
180	113	-.309	.053	-.139	-.675
180	114	-.294	.050	-.155	-.521
180	115	-.288	.051	-.118	-.510
180	116	-.306	.057	-.127	-.758
180	117	-.318	.052	-.176	-.619
180	118	-.322	.047	-.198	-.627
180	119	-.299	.047	-.103	-.554
180	120	-.293	.049	-.146	-.525
180	121	-.296	.054	-.148	-.565
180	122	-.303	.061	-.083	-.587
180	123	-.287	.060	-.054	-.606
180	124	-.411	.078	-.136	-.816
180	125	-.378	.071	-.185	-.835
180	126	-.373	.065	-.206	-.675
180	127	-.368	.060	-.179	-.649
180	128	-.343	.056	-.166	-.603
180	129	-.507	.066	-.321	-.797
180	130	-.326	.058	-.171	-.565
180	131	-.341	.061	-.158	-.661
180	133	-.439	.094	.044	-.947
180	134	-.409	.084	-.028	-.823
180	135	-.428	.076	-.213	-.872
180	136	-.411	.077	-.165	-1.059
180	137	-.432	.076	-.227	-.822
180	139	-.512	.073	-.328	-.811
180	140	-.432	.089	.207	-.960

WD	TAP	CPMEAN	CPRMS	CPMAX	CPMIN
180	141	-.422	.099	.000	-.974
180	142	-.410	.097	.028	-.873
180	143	-.445	.082	-.163	-.836
180	144	-.407	.076	-.215	-.691
180	145	-.405	.074	-.197	-.699
180	146	-.359	.071	-.156	-.746
180	147	-.500	.079	-.289	-.789
180	148	-.534	.080	-.252	-1.141
180	149	-.541	.076	-.352	-1.115
180	150	-.538	.071	-.358	-.900
180	151	-.535	.071	-.347	-.825
180	152	-.397	.074	-.208	-.721
180	153	-.350	.080	-.118	-.775
180	154	-.366	.073	-.172	-.732
180	155	-.383	.078	-.150	-.757
180	156	-.647	.084	-.340	-1.107
180	157	-.596	.075	-.411	-1.065
180	158	-.583	.073	-.400	-.965
180	159	-.548	.081	-.321	-.882
180	160	-.345	.078	-.150	-.745
180	161	-.609	.085	-.327	-.991
180	162	-.617	.082	-.334	-.926
180	163	-.617	.087	-.327	-1.054
180	164	-.622	.082	-.388	-1.027
180	165	-.689	.091	-.451	-1.233
180	166	-.600	.086	-.408	-1.427
180	167	-.508	.064	-.339	-.743
180	168	-.564	.073	-.384	-.834
180	169	-.661	.076	-.448	-.945
180	170	-.195	.062	.076	-.406
180	171	-.223	.051	-.010	-.472
180	201	-.154	.096	.130	-.530
180	202	-.489	.101	-.063	-1.175
180	203	-.324	.076	-.089	-.678
180	204	-.360	.090	.034	-.881
180	205	-.354	.093	.032	-.994
180	206	-.310	.079	-.054	-.903
180	207	-.325	.091	-.052	-1.185
180	208	-.329	.069	-.065	-.704
180	209	-.313	.063	-.044	-.588
180	210	-.315	.063	-.050	-.607
180	211	-.334	.063	-.076	-.661
180	212	-.329	.060	-.129	-.613
180	213	-.327	.063	-.110	-.605
180	214	-.546	.058	-.338	-.776
180	215	-.319	.055	-.136	-.658
180	216	-.333	.053	-.155	-.639
180	217	-.330	.051	-.188	-.541
180	218	-.354	.052	-.211	-.568
180	219	-.349	.050	-.199	-.530

WD	TAP	CPMEAN	CPRMS	CPMAX	CPMIN
180	220	-.384	.063	-.188	-.714
180	221	-.369	.080	-.120	-.789
180	222	-.392	.056	-.186	-.649
180	223	-.547	.062	-.371	-.765
180	224	-.421	.059	-.248	-.654
180	225	-.674	.066	-.500	-.966
180	225	-.674	.066	-.500	-.966
180	226	-.419	.061	-.262	-.728
180	227	-.400	.056	-.238	-.619
180	228	-.434	.062	-.282	-.771
180	229	-.419	.069	-.244	-.753
180	230	-.585	.080	-.409	-1.133
180	232	-.644	.078	-.393	-.947
180	233	-.709	.081	-.461	-1.197
180	234	-.424	.081	-.237	-1.062
180	235	-.433	.083	-.156	-.911
180	236	-.475	.071	-.280	-.856
180	237	-.663	.077	-.456	-.971
180	239	-.460	.083	-.236	-.993
180	240	-.464	.080	-.227	-.822
180	241	-.443	.091	-.201	-.966
180	242	-.400	.087	-.161	-.969
180	243	-.571	.082	-.361	-.962
180	244	-.468	.096	-.220	-1.063
180	245	-.477	.076	-.259	-.966
180	249	-.591	.102	-.359	-1.201
180	250	-.635	.090	-.309	-1.110
180	252	-.538	.117	-.250	-1.150
180	253	-.643	.128	-.316	-1.337
180	254	-.364	.115	.111	-.936
180	255	-.430	.079	-.173	-.995
180	256	-.533	.086	-.211	-.971
180	257	-.560	.100	-.178	-1.269
180	258	-.542	.094	-.194	-1.184
180	259	-.401	.077	-.194	-.760
180	260	-.483	.084	-.271	-.863
180	261	-.319	.127	.121	-.816
180	262	-.800	.150	-.284	-1.514
180	263	-.623	.117	-.311	-1.246
180	264	-.654	.106	-.405	-1.325
180	265	-.699	.103	-.451	-1.226
180	266	-.625	.056	-.487	-.859
180	267	-.624	.098	-.361	-1.302
180	268	-.618	.111	-.295	-1.645
180	269	-.549	.099	-.239	-1.172
180	270	-.196	.070	.118	-.481
180	271	-.624	.081	-.400	-1.066
180	272	-.534	.073	-.339	-.880
180	273	-.679	.097	-.438	-1.262
180	280	-.526	.096	-.177	-1.208

APPENDIX A -- PRESSURE DATA: BASS BROTHERS BUILDING - PHASE I, DALLAS, TEXAS -- CONFIGURATION A

WD	TAP	CPMEAN	CPRMS	CPMAX	CPMIN
180	301	-.037	.155	.510	-.568
180	302	.413	.189	1.137	-.383
180	303	-.102	.177	.520	-.776
180	304	.040	.095	.395	-.437
180	305	-.066	.069	.196	-.394
180	306	-.349	.106	.171	-.989
180	307	-.346	.109	.078	-.815
180	308	-.277	.127	.445	-.728
180	309	-.077	.109	.369	-.467
180	310	-.182	.113	.259	-.606
180	311	.304	.170	.902	-.307
180	312	-.196	.126	.457	-.676
180	313	.459	.195	1.044	-.265
180	314	.056	.193	.632	-.744
180	315	.105	.174	.633	-.570
180	316	-.053	.161	.541	-.597
180	317	.460	.181	1.085	-.070
180	318	.303	.190	.880	-.236
180	319	.324	.150	.873	-.111
180	320	.278	.150	.891	-.234
180	321	.352	.173	1.148	-.129
180	322	-.366	.117	.173	-.894
180	323	-.012	.205	.787	-.664
180	324	.453	.192	1.000	-.420
180	325	.266	.166	.770	-.605
180	326	.385	.162	.873	-.104
180	327	.295	.194	.953	-.254
180	328	.313	.161	.936	-.303
180	329	-.165	.246	.711	-1.156
180	330	-.066	.129	.564	-.674
180	331	.394	.191	1.056	-.535
180	332	.262	.159	.770	-.296
180	333	.346	.154	.838	-.133
180	334	.366	.170	1.030	-.183
180	335	.296	.145	.850	-.064
180	336	.197	.116	.637	-.136
180	337	.110	.101	.604	-.239
180	338	.010	.085	.374	-.270
180	339	-.157	.069	.215	-.418
180	340	.278	.173	.914	-.453
180	341	.141	.132	.678	-.351
180	342	.233	.134	.698	-.185
180	343	.250	.141	.805	-.154
180	344	.223	.118	.694	-.084
180	345	.097	.093	.506	-.138
180	346	.037	.077	.394	-.163
180	347	-.091	.066	.245	-.316
180	348	-.173	.056	.134	-.367
180	349	.185	.152	.886	-.458
180	350	.108	.106	.567	-.266

WD	TAP	CPMEAN	CPRMS	CPMAX	CPMIN
180	352	.203	.130	.753	-.111
180	353	.023	.080	.380	-.186
180	354	.009	.072	.369	-.217
180	355	-.006	.072	.333	-.279
180	359	.226	.141	.798	-.145
180	360	.049	.116	.605	-.273
180	361	.182	.116	.642	-.086
180	362	.252	.179	.984	-.227
180	363	.234	.166	.879	-.610
180	364	.151	.160	.664	-.933
180	365	-.441	.141	.034	-1.465
180	366	-.637	.101	-.044	-1.187
180	367	-.270	.116	.084	-1.154
180	368	.008	.095	.430	-.289
180	369	.170	.104	.630	-.076
180	370	.191	.116	.727	-.104
180	371	.204	.143	1.077	-.111
180	372	.082	.120	.926	-.215
180	373	-.610	.173	-.084	-1.462
180	374	.209	.150	1.033	-.150
180	375	.192	.111	.681	-.047
180	376	.010	.109	.556	-.330
180	377	-.125	.087	.331	-.461
180	378	-.017	.088	.355	-.376
180	379	.003	.111	.573	-.243
180	380	.064	.137	.811	-.242
180	381	-.080	.083	.322	-.359
180	382	-.680	.169	-.159	-1.411
180	383	-.016	.121	.692	-.329
180	384	-.203	.116	.229	-.983
180	385	-.835	.195	-.360	-2.016
180	386	-.101	.107	.411	-.464
180	387	-.692	.164	-.327	-1.381
180	388	-.696	.150	-.351	-1.449
180	389	-.076	.090	.315	-.367
180	390	-.384	.091	.053	-.618
180	391	-.461	.078	-.121	-.799
180	392	-.888	.155	-.452	-1.449
180	393	-.666	.090	-.434	-1.012
180	401	-.257	.077	.006	-.581
180	402	-.235	.097	.108	-.690
180	403	-.412	.102	-.016	-.842
180	404	-.209	.136	.244	-.957
180	405	.020	.094	.359	-.418
180	406	-.039	.126	.345	-.773
180	407	.137	.186	.609	-.782
180	408	-.563	.149	-.092	-1.231
180	409	-.149	.149	.459	-.794
180	410	-.042	.177	.742	-.725
180	411	.182	.190	.960	-.384

WD	TAP	CPMEAN	CPRMS	CPMAX	CPMIN
180	412	-.147	.146	.352	-.934
180	413	-.256	.191	.381	-1.227
180	414	.441	.194	1.044	-.483
180	415	.282	.200	.843	-.889
180	416	.297	.166	1.061	-.158
180	417	.176	.156	.762	-.482
180	418	.040	.120	.617	-.791
180	419	.397	.180	.944	-.362
180	420	.381	.175	1.080	-.319
180	421	-.169	.195	.397	-1.099
180	422	-.259	.214	.328	-1.265
180	423	-.310	.245	.350	-1.424
180	424	-.401	.103	-.138	-1.031
180	425	-.057	.084	.315	-.424
180	426	.156	.125	.757	-.297
180	427	.301	.150	.848	-.129
180	428	.179	.113	.628	-.143
180	429	.046	.123	.476	-.444
180	430	.179	.124	.666	-.441
180	431	.206	.172	.715	-.664
180	432	.148	.232	.834	-.802
180	433	-.398	.086	-.158	-.836
180	434	-.062	.078	.229	-.401
180	435	.108	.105	.590	-.179
180	436	.201	.132	.741	-.155
180	437	.141	.098	.576	-.106
180	438	.128	.099	.506	-.137
180	439	-.003	.079	.222	-.252
180	440	.191	.149	.742	-.449
180	441	.152	.207	.850	-.688
180	442	.026	.137	.670	-.489
180	443	.205	.142	.759	-.334
180	444	.257	.183	1.016	-.535
180	445	-.001	.104	.489	-.389
180	446	-.039	.100	.369	-.493
180	447	-.078	.185	.586	-.880
180	449	-.293	.080	.055	-.751
180	450	.143	.107	.599	-.163
180	451	-.079	.116	.439	-.410
180	452	-.151	.134	.382	-.808
180	453	.070	.131	.673	-.333
180	454	-.433	.095	-.159	-.965
180	455	-.251	.079	.090	-.568
180	456	.021	.091	.377	-.208
180	457	.113	.120	.736	-.194
180	458	.145	.097	.652	-.080
180	459	.057	.086	.410	-.324
180	460	.049	.086	.374	-.301
180	461	-.132	.124	.378	-.634
180	462	-.465	.101	-.206	-1.052

APPENDIX A -- PRESSURE DATA: BASS BROTHERS BUILDING - PHASE I, DALLAS, TEXAS -- CONFIGURATION A

WD	TAP	CPMEAN	CPRMS	CPMAX	CPMIN
180	463	-.170	.071	.168	-.426
180	464	.015	.105	.441	-.213
180	465	-.102	.137	.414	-.626
180	466	-.351	.071	-.150	-.673
180	467	-.124	.106	.298	-.582
180	468	-.144	.062	.097	-.426
180	469	-.232	.061	.028	-.468
180	470	.015	.085	.506	-.374
180	471	.041	.101	.598	-.378
180	472	-.500	.065	-.277	-.769
180	473	-.403	.055	-.209	-.632
180	474	-.339	.043	-.128	-.511
180	475	-.240	.056	.002	-.423
180	476	-.215	.082	.189	-.614
180	477	-.093	.090	.491	-.328
180	478	-.050	.138	.638	-.541
180	479	-.451	.054	-.231	-.725
180	480	-.268	.074	.043	-.464
180	481	-.204	.106	.371	-.570
180	482	-.174	.083	.257	-.425
180	483	-.193	.072	.213	-.552
180	484	-.179	.125	.388	-.595
180	702	.104	.095	.499	-.160
180	703	.082	.088	.508	-.163
180	704	.045	.106	.515	-.228
180	801	-.235	.086	.031	-.697
180	802	-.338	.138	.314	-.938
180	803	-.332	.104	.115	-.781
180	804	-.298	.136	.186	-.737
180	805	-.347	.091	.041	-.806
180	806	-.802	.192	-.272	-1.447
180	807	-.419	.114	-.141	-1.048
180	808	.049	.130	.410	-.601
180	809	-.352	.095	-.044	-.852
180	810	-.401	.150	.120	-1.129
180	811	-.710	.261	.167	-2.186
180	905	-.560	.074	-.258	-.895
180	906	-.434	.065	-.219	-.753
180	907	-.643	.077	-.438	-1.166
180	908	-.631	.083	-.420	-1.206
180	909	.030	.115	.696	-.251
180	910	-.621	.084	-.348	-.945
180	911	-.190	.065	.084	-.516
180	912	-.264	.066	-.008	-.612
180	913	-.299	.066	.021	-.543
180	915	-.082	.075	.245	-.594
190	101	-.320	.071	-.098	-.597
190	102	-.326	.077	-.085	-.686
190	103	-.315	.104	.002	-1.030
190	104	-.315	.099	-.009	-1.077

WD	TAP	CPMEAN	CPRMS	CPMAX	CPMIN
190	105	-.373	.100	-.096	-1.023
190	106	-.368	.097	-.102	-.955
190	107	-.334	.068	-.137	-.814
190	108	-.332	.075	-.096	-.694
190	109	-.329	.073	-.102	-.676
190	110	-.363	.114	-.044	-1.139
190	111	-.368	.113	-.058	-1.212
190	112	-.367	.079	-.144	-.840
190	113	-.345	.066	-.151	-.719
190	114	-.332	.056	-.140	-.571
190	115	-.317	.060	-.148	-.613
190	116	-.359	.074	-.136	-.772
190	117	-.376	.064	-.204	-.682
190	118	-.377	.057	-.227	-.601
190	119	-.355	.053	-.197	-.606
190	120	-.340	.055	-.182	-.557
190	121	-.331	.058	-.144	-.587
190	122	-.337	.064	-.130	-.641
190	123	-.342	.069	-.171	-.701
190	124	-.429	.070	-.195	-.797
190	125	-.423	.071	-.217	-.794
190	126	-.410	.065	-.211	-.756
190	127	-.412	.060	-.246	-.738
190	128	-.419	.060	-.244	-.649
190	129	-.550	.069	-.350	-.805
190	130	-.389	.063	-.158	-.640
190	131	-.405	.065	-.168	-.679
190	133	-.396	.099	-.059	-1.008
190	134	-.400	.089	-.099	-.939
190	135	-.406	.075	-.168	-.798
190	136	-.445	.079	-.235	-.772
190	137	-.416	.073	-.223	-.671
190	139	-.555	.081	-.343	-1.041
190	140	-.407	.100	-.110	-.977
190	141	-.410	.115	-.043	-1.286
190	142	-.430	.103	-.040	-.908
190	143	-.409	.086	-.194	-.858
190	144	-.407	.078	-.198	-.768
190	145	-.397	.071	-.221	-.791
190	146	-.411	.073	-.191	-.720
190	147	-.553	.086	-.299	-.989
190	148	-.558	.107	-.092	-1.256
190	149	-.560	.094	-.159	-1.082
190	150	-.572	.102	-.305	-1.444
190	151	-.580	.095	-.329	-1.267
190	152	-.395	.071	-.205	-.735
190	153	-.408	.076	-.172	-.878
190	154	-.415	.073	-.207	-.791
190	155	-.395	.079	-.174	-1.030
190	156	-.697	.129	-.251	-1.420

WD	TAP	CPMEAN	CPRMS	CPMAX	CPMIN
190	157	-.664	.113	-.061	-1.346
190	158	-.622	.091	-.391	-1.132
190	159	-.635	.098	-.358	-1.103
190	160	-.394	.081	-.158	-.806
190	161	-.701	.093	-.425	-1.232
190	162	-.628	.107	-.271	-1.176
190	163	-.599	.097	-.177	-1.129
190	164	-.607	.080	-.358	-1.017
190	165	-.691	.085	-.430	-1.126
190	166	-.658	.127	-.116	-1.473
190	167	-.567	.099	-.318	-1.037
190	168	-.601	.074	-.394	-.890
190	169	-.684	.077	-.472	-1.003
190	170	-.201	.051	.011	-.415
190	171	-.226	.048	-.053	-.499
190	201	-.163	.129	.202	-.772
190	202	-.456	.118	-.075	-1.016
190	203	-.315	.077	-.079	-.701
190	204	-.332	.088	.007	-.724
190	205	-.319	.094	-.021	-1.127
190	206	-.313	.092	-.087	-.813
190	207	-.312	.105	-.060	-.953
190	208	-.309	.065	-.098	-.639
190	209	-.293	.062	-.089	-.606
190	210	-.286	.060	-.086	-.592
190	211	-.304	.058	-.125	-.603
190	212	-.316	.061	-.112	-.611
190	213	-.307	.064	-.099	-.652
190	214	-.527	.058	-.353	-.842
190	215	-.311	.053	-.116	-.633
190	216	-.325	.051	-.161	-.606
190	217	-.327	.054	-.169	-.630
190	218	-.348	.054	-.190	-.651
190	219	-.331	.048	-.175	-.515
190	220	-.343	.050	-.186	-.518
190	221	-.333	.055	-.101	-.612
190	222	-.400	.057	-.207	-.642
190	223	-.529	.060	-.343	-.783
190	224	-.404	.058	-.241	-.620
190	225	-.678	.067	-.495	-1.042
190	225	-.678	.067	-.495	-1.042
190	226	-.421	.063	-.244	-.730
190	227	-.396	.061	-.253	-.853
190	228	-.407	.054	-.253	-.825
190	229	-.404	.058	-.210	-.666
190	230	-.551	.076	-.330	-.869
190	232	-.634	.083	-.408	-1.113
190	233	-.704	.088	-.454	-1.159
190	234	-.393	.071	-.188	-.701
190	235	-.413	.072	-.235	-.726

APPENDIX A -- PRESSURE DATA: BASS BROTHERS BUILDING - PHASE I, DALLAS, TEXAS -- CONFIGURATION A

WD	TAP	CPMEAN	CPRMS	CPMAX	CPMIN
190	236	-.426	.069	-.234	-.770
190	237	-.658	.082	-.446	-1.194
190	239	-.397	.066	-.206	-.737
190	240	-.395	.074	-.183	-1.141
190	241	-.391	.092	-.126	-1.008
190	242	-.387	.093	-.152	-.933
190	243	-.557	.078	-.362	-.967
190	244	-.447	.084	-.220	-.845
190	245	-.411	.068	-.203	-.726
190	249	-.574	.097	-.326	-1.019
190	250	-.574	.095	-.280	-1.068
190	252	-.473	.105	-.185	-1.041
190	253	-.612	.119	-.320	-1.183
190	254	-.312	.110	.075	-.744
190	255	-.382	.081	-.163	-.905
190	256	-.501	.083	-.224	-1.035
190	257	-.526	.092	-.246	-1.049
190	258	-.532	.096	-.210	-1.376
190	259	-.327	.072	-.128	-.607
190	260	-.449	.084	-.225	-.834
190	261	-.213	.113	.359	-.685
190	262	-.846	.177	-.316	-1.800
190	263	-.597	.113	-.259	-1.133
190	264	-.640	.105	-.377	-1.230
190	265	-.684	.104	-.365	-1.191
190	266	-.593	.049	-.448	-.750
190	267	-.535	.101	-.115	-1.057
190	268	-.563	.100	-.243	-1.214
190	269	-.529	.100	-.079	-1.597
190	270	-.147	.075	.164	-.382
190	271	-.603	.096	-.295	-.978
190	272	-.533	.074	-.316	-.929
190	273	-.657	.096	-.368	-1.279
190	280	-.489	.089	-.135	-.897
190	301	-.061	.168	.427	-.627
190	302	.228	.268	1.013	-.863
190	303	-.114	.158	.519	-.835
190	304	-.017	.122	.305	-.463
190	305	-.077	.091	.162	-.451
190	306	-.318	.106	.178	-.743
190	307	-.336	.117	.067	-1.169
190	308	-.288	.112	.212	-.745
190	309	-.094	.141	.374	-.556
190	310	-.201	.134	.498	-.698
190	311	.220	.211	.992	-.482
190	312	-.200	.111	.251	-.719
190	313	.245	.257	.913	-1.388
190	314	-.051	.203	.505	-1.003
190	315	-.000	.191	.508	-.786
190	316	-.111	.157	.532	-.736
190	317	.241	.194	.977	-.330
190	318	.091	.213	.847	-.789
190	319	.192	.173	.805	-.235
190	320	.171	.177	.735	-.413
190	321	.237	.204	.922	-.335
190	322	-.331	.111	.098	-.744
190	323	.016	.187	.607	-.631
190	324	.226	.238	.974	-.919
190	325	.147	.183	.764	-.656
190	326	.232	.179	.814	-.301
190	327	.117	.214	.807	-.679
190	328	.237	.190	.993	-.553
190	329	-.089	.199	.772	-.925
190	330	-.081	.136	.661	-.838
190	331	.200	.193	.871	-.642
190	332	.184	.163	.852	-.307
190	333	.219	.167	.799	-.218
190	334	.257	.161	.919	-.212
190	335	.232	.149	.792	-.150
190	336	.182	.135	.681	-.187
190	337	.110	.126	.596	-.321
190	338	.018	.110	.443	-.285
190	339	-.129	.083	.227	-.410
190	340	.183	.139	.803	-.563
190	341	.138	.119	.709	-.324
190	342	.183	.120	.756	-.282
190	343	.188	.128	.837	-.221
190	344	.198	.122	.641	-.105
190	345	.126	.116	.601	-.176
190	346	.068	.107	.624	-.210
190	347	-.051	.092	.399	-.326
190	348	-.144	.071	.185	-.506
190	349	.138	.132	.773	-.372
190	350	.116	.108	.613	-.289
190	352	.175	.114	.732	-.123
190	353	.066	.098	.468	-.169
190	354	.044	.092	.404	-.189
190	355	.027	.094	.409	-.244
190	359	.130	.112	.702	-.129
190	360	.024	.106	.533	-.245
190	361	.135	.107	.586	-.096
190	362	.199	.146	.773	-.190
190	363	.181	.149	.736	-.800
190	364	.146	.146	.645	-.836
190	365	-.362	.124	.100	-1.368
190	366	-.626	.115	-.255	-1.201
190	367	-.205	.121	.175	-1.146
190	368	-.027	.088	.481	-.304
190	369	.112	.085	.567	-.296
190	370	.163	.104	.649	-.095
190	371	.185	.130	.831	-.135
190	372	.136	.119	.696	-.209
190	373	-.488	.168	.038	-1.320
190	374	.190	.133	.768	-.086
190	375	.173	.108	.634	-.079
190	376	-.017	.109	.555	-.484
190	377	-.134	.088	.393	-.436
190	378	-.022	.089	.458	-.308
190	379	-.017	.099	.463	-.312
190	380	.057	.150	1.087	-.248
190	381	-.018	.090	.455	-.300
190	382	-.565	.184	-.022	-1.324
190	383	-.102	.092	.571	-.439
190	384	-.159	.134	.468	-1.237
190	385	-.720	.223	-.106	-1.832
190	386	-.171	.090	.296	-.626
190	387	-.533	.146	-.111	-1.291
190	388	-.554	.131	-.141	-1.273
190	389	-.069	.101	.464	-.341
190	390	-.288	.107	.135	-.566
190	391	-.399	.075	-.063	-.709
190	392	-.868	.180	-.391	-1.724
190	393	-.641	.088	-.387	-1.010
190	401	-.241	.097	.146	-.677
190	402	-.218	.116	.235	-.760
190	403	-.448	.124	.072	-.878
190	404	-.194	.154	.401	-.642
190	405	.014	.145	.524	-.513
190	406	-.022	.168	.650	-.638
190	407	.096	.230	.825	-1.044
190	408	-.466	.175	.148	-1.298
190	409	-.181	.198	.741	-.740
190	410	-.083	.209	.758	-.676
190	411	.027	.184	.769	-.447
190	412	-.132	.159	.496	-.959
190	413	-.198	.239	.702	-1.357
190	414	.256	.220	.879	-.605
190	415	.088	.212	.830	-.863
190	416	.185	.167	.837	-.271
190	417	.116	.148	.730	-.346
190	418	.060	.143	1.015	-.544
190	419	.233	.179	1.143	-.546
190	420	.238	.173	.887	-.520
190	421	-.131	.171	.521	-1.180
190	422	-.197	.196	.397	-1.655
190	423	-.229	.251	.617	-1.511
190	424	-.457	.151	.026	-1.207
190	425	-.139	.098	.479	-.539
190	426	.048	.114	.650	-.333
190	427	.163	.120	.698	-.150

APPENDIX A -- PRESSURE DATA: BASS BROTHERS BUILDING - PHASE I, DALLAS, TEXAS -- CONFIGURATION A

WD	TAP	CPMEAN	CPRMS	CPMAX	CPMIN
190	428	.090	.089	.654	-.155
190	429	-.054	.105	.438	-.430
190	430	.090	.105	.818	-.497
190	431	.113	.154	.609	-.982
190	432	.059	.191	.697	-.856
190	433	-.488	.116	-.171	-1.153
190	434	-.152	.075	.170	-.422
190	435	.009	.084	.429	-.237
190	436	.106	.103	.630	-.198
190	437	.058	.071	.370	-.132
190	438	.048	.070	.367	-.181
190	439	-.114	.059	.076	-.336
190	440	.063	.128	.493	-.693
190	441	.009	.169	.623	-.835
190	442	-.042	.115	.461	-.421
190	443	.069	.114	.521	-.583
190	444	.059	.145	.744	-.726
190	445	-.055	.075	.213	-.391
190	446	-.085	.077	.211	-.513
190	447	-.141	.141	.325	-.838
190	449	-.346	.072	.054	-.622
190	450	.032	.073	.402	-.194
190	451	-.185	.081	.153	-.480
190	452	-.212	.115	.384	-.793
190	453	.006	.119	.633	-.536
190	454	-.479	.105	-.040	-.903
190	455	-.295	.071	.050	-.530
190	456	-.082	.066	.257	-.256
190	457	.018	.072	.432	-.215
190	458	.041	.069	.392	-.135
190	459	-.019	.069	.293	-.305
190	460	-.043	.067	.265	-.514
190	461	-.179	.110	.260	-.647
190	462	-.464	.097	.007	-.841
190	463	-.185	.061	.172	-.435
190	464	-.031	.091	.478	-.274
190	465	-.278	.117	.242	-.863
190	466	-.332	.063	-.084	-.755
190	467	-.111	.073	.223	-.523
190	468	-.156	.049	.025	-.422
190	469	-.278	.051	-.085	-.525
190	470	-.055	.074	.227	-.555
190	471	-.017	.094	.353	-.468
190	472	-.499	.070	-.244	-.755
190	473	-.427	.062	-.214	-.708
190	474	-.332	.049	-.163	-.479
190	475	-.282	.052	-.068	-.501
190	476	-.242	.092	.140	-.683
190	477	-.122	.091	.477	-.357
190	478	-.124	.138	.434	-.732

WD	TAP	CPMEAN	CPRMS	CPMAX	CPMIN
190	479	-.460	.052	-.271	-.674
190	480	-.343	.070	-.040	-.547
190	481	-.275	.139	.329	-.676
190	482	-.255	.114	.162	-.706
190	483	-.277	.121	.085	-.744
190	484	-.230	.172	1.085	-.751
190	702	.027	.068	.418	-.174
190	703	.009	.053	.259	-.184
190	704	-.005	.087	.424	-.284
190	801	-.286	.107	.018	-1.014
190	802	-.351	.114	.276	-.847
190	803	-.299	.115	.183	-.859
190	804	-.230	.148	.276	-.901
190	805	-.334	.103	.013	-.872
190	806	-.699	.224	-.082	-1.601
190	807	-.388	.112	-.074	-1.097
190	808	.010	.160	.450	-.783
190	809	-.339	.094	-.021	-.914
190	810	-.387	.140	.065	-1.150
190	811	-.569	.240	.146	-1.505
190	905	-.569	.098	-.177	-1.035
190	906	-.461	.068	-.257	-.814
190	907	-.726	.122	-.386	-1.594
190	908	-.598	.075	-.393	-.952
190	909	-.042	.082	.552	-.257
190	910	-.573	.083	-.286	-.974
190	911	-.206	.057	.064	-.428
190	912	-.203	.057	.050	-.528
190	913	-.241	.080	.066	-.646
190	915	-.110	.064	.198	-.416
200	101	-.345	.073	-.086	-.671
200	102	-.346	.077	-.106	-.738
200	103	-.340	.102	-.014	-1.154
200	104	-.345	.095	-.046	-.850
200	105	-.412	.107	-.098	-1.651
200	106	-.401	.094	-.074	-1.207
200	107	-.376	.073	-.161	-.696
200	108	-.368	.081	-.127	-.790
200	109	-.361	.078	-.114	-.760
200	110	-.416	.126	-.086	-1.363
200	111	-.415	.111	-.101	-.945
200	112	-.415	.082	-.212	-.921
200	113	-.395	.069	-.193	-.911
200	114	-.371	.061	-.142	-.686
200	115	-.340	.059	-.156	-.582
200	116	-.433	.096	-.226	-1.317
200	117	-.425	.072	-.217	-.919
200	118	-.432	.066	-.244	-.874
200	119	-.412	.058	-.231	-.683
200	120	-.384	.059	-.179	-.630

WD	TAP	CPMEAN	CPRMS	CPMAX	CPMIN
200	121	-.368	.059	-.210	-.636
200	122	-.372	.061	-.183	-.672
200	123	-.360	.060	-.190	-.671
200	124	-.473	.084	-.182	-.942
200	125	-.450	.072	-.081	-.865
200	126	-.438	.066	-.255	-.728
200	127	-.446	.061	-.278	-.713
200	128	-.455	.059	-.279	-.693
200	129	-.591	.064	-.387	-.855
200	130	-.427	.058	-.210	-.662
200	131	-.443	.060	-.217	-.679
200	133	-.361	.087	.079	-.908
200	134	-.390	.087	-.060	-.900
200	135	-.417	.089	-.095	-.869
200	136	-.459	.077	-.244	-1.014
200	137	-.428	.071	-.228	-.766
200	139	-.595	.076	-.384	-1.032
200	140	-.388	.091	-.036	-.919
200	141	-.347	.118	.063	-.921
200	142	-.373	.116	.127	-.844
200	143	-.388	.084	-.107	-.814
200	144	-.423	.079	-.228	-.887
200	145	-.412	.071	-.212	-.739
200	146	-.430	.074	-.201	-.820
200	147	-.598	.084	-.317	-1.153
200	148	-.523	.108	-.070	-.988
200	149	-.536	.098	-.150	-.958
200	150	-.594	.103	-.211	-1.178
200	151	-.634	.101	-.336	-1.175
200	152	-.411	.074	-.213	-.757
200	153	-.434	.080	-.238	-.903
200	154	-.434	.078	-.112	-.799
200	155	-.412	.082	-.168	-.860
200	156	-.670	.119	-.215	-1.520
200	157	-.652	.104	-.253	-1.336
200	158	-.639	.099	-.363	-1.402
200	159	-.663	.126	-.379	-1.393
200	160	-.437	.100	-.164	-.896
200	161	-.717	.118	-.419	-1.412
200	162	-.586	.102	-.201	-1.169
200	163	-.568	.103	-.141	-1.263
200	164	-.659	.103	-.367	-1.197
200	165	-.747	.125	-.448	-1.572
200	166	-.671	.143	-.034	-1.634
200	167	-.587	.099	-.112	-1.062
200	168	-.633	.089	-.348	-1.108
200	169	-.711	.091	-.412	-1.184
200	170	-.187	.063	.161	-.468
200	171	-.223	.053	-.055	-.518
200	201	-.160	.123	.176	-.655

APPENDIX A -- PRESSURE DATA: BASS BROTHERS BUILDING - PHASE I, DALLAS, TEXAS -- CONFIGURATION A

WD	TAP	CPMEAN	CPRMS	CPMAX	CPMIN
200	202	-.483	.115	-.111	-1.082
200	203	-.346	.081	-.072	-.756
200	204	-.344	.086	-.058	-.830
200	205	-.323	.087	-.110	-.819
200	206	-.334	.089	-.069	-.890
200	207	-.334	.098	-.012	-.938
200	208	-.333	.066	-.139	-.799
200	209	-.318	.060	-.124	-.615
200	210	-.309	.059	-.117	-.588
200	211	-.326	.056	-.144	-.552
200	212	-.324	.058	-.125	-.623
200	213	-.312	.060	-.096	-.620
200	214	-.542	.053	-.369	-.993
200	215	-.323	.049	-.176	-.557
200	216	-.339	.048	-.198	-.559
200	217	-.337	.044	-.203	-.559
200	218	-.347	.044	-.217	-.528
200	219	-.340	.043	-.219	-.518
200	220	-.350	.047	-.182	-.530
200	221	-.339	.051	-.149	-.532
200	222	-.385	.045	-.261	-.546
200	223	-.549	.057	-.369	-.903
200	224	-.401	.046	-.263	-.599
200	225	-.671	.059	-.499	-.952
200	225	-.671	.059	-.499	-.952
200	226	-.399	.048	-.279	-.661
200	227	-.385	.045	-.233	-.591
200	228	-.402	.045	-.218	-.613
200	229	-.400	.049	-.185	-.604
200	230	-.576	.076	-.382	-.956
200	232	-.594	.078	-.278	-1.070
200	233	-.692	.085	-.481	-1.202
200	234	-.434	.100	-.228	-.964
200	235	-.423	.082	-.201	-.870
200	236	-.345	.060	-.090	-.603
200	237	-.616	.075	-.346	-1.026
200	239	-.355	.069	-.076	-.741
200	240	-.354	.068	-.123	-.682
200	241	-.352	.077	-.085	-.869
200	242	-.361	.077	-.134	-.889
200	243	-.564	.075	-.347	-.893
200	244	-.408	.070	-.220	-.962
200	245	-.349	.062	-.059	-.640
200	249	-.583	.092	-.328	-1.117
200	250	-.565	.110	-.217	-1.368
200	252	-.471	.096	-.121	-1.156
200	253	-.620	.105	-.381	-1.224
200	254	-.318	.073	.064	-.679
200	255	-.361	.068	-.140	-.908
200	256	-.526	.091	-.162	-.951

WD	TAP	CPMEAN	CPRMS	CPMAX	CPMIN
200	257	-.569	.131	-.119	-1.491
200	258	-.517	.113	-.126	-.992
200	259	-.266	.051	-.118	-.553
200	260	-.363	.061	-.206	-.608
200	261	-.220	.077	.101	-.540
200	262	-.715	.102	-.432	-1.432
200	263	-.585	.083	-.319	-1.006
200	264	-.642	.082	-.381	-1.113
200	265	-.675	.082	-.412	-1.166
200	266	-.595	.041	-.487	-.792
200	267	-.587	.092	-.246	-1.172
200	268	-.619	.112	-.230	-1.230
200	269	-.527	.114	-.095	-1.222
200	270	-.247	.070	-.026	-.462
200	271	-.516	.059	-.334	-.788
200	272	-.503	.065	-.317	-.873
200	273	-.619	.094	-.313	-1.197
200	280	-.545	.108	-.099	-1.122
200	301	-.081	.219	.707	-.900
200	302	-.081	.389	.873	-1.811
200	303	-.287	.148	.254	-1.119
200	304	-.177	.145	.262	-.894
200	305	-.100	.097	.248	-.663
200	306	-.301	.099	.186	-.703
200	307	-.324	.099	-.001	-.741
200	308	-.388	.123	.258	-.855
200	309	-.068	.141	.403	-.515
200	310	-.168	.164	.745	-.652
200	311	.126	.177	.823	-.371
200	312	-.317	.124	.212	-.827
200	313	-.108	.401	.825	-1.891
200	314	-.380	.278	.319	-1.557
200	315	-.235	.224	.363	-1.229
200	316	-.226	.164	.308	-.993
200	317	.105	.164	.740	-.498
200	318	-.097	.214	.609	-1.182
200	319	.048	.135	.571	-.579
200	320	.058	.133	.602	-.455
200	321	.141	.162	.808	-.365
200	322	-.370	.093	-.021	-.753
200	323	-.146	.175	.569	-.729
200	324	-.072	.287	.677	-1.324
200	325	-.085	.173	.496	-1.199
200	326	.031	.153	.632	-.613
200	327	-.120	.190	.549	-1.685
200	328	.104	.134	.746	-.308
200	329	-.255	.213	.393	-1.426
200	330	-.198	.119	.331	-.765
200	331	-.044	.228	.607	-1.118
200	332	-.005	.142	.447	-.822

WD	TAP	CPMEAN	CPRMS	CPMAX	CPMIN
200	333	.026	.138	.469	-.748
200	334	.050	.133	.587	-.609
200	335	.075	.118	.505	-.578
200	336	.054	.088	.461	-.282
200	337	-.006	.080	.386	-.346
200	338	-.082	.070	.234	-.346
200	339	-.199	.061	.033	-.469
200	340	-.009	.182	.686	-.987
200	341	-.004	.101	.422	-.573
200	342	.039	.097	.454	-.381
200	343	.041	.097	.519	-.383
200	344	.079	.087	.496	-.423
200	345	.018	.070	.495	-.230
200	346	-.028	.065	.504	-.228
200	347	-.130	.060	.319	-.353
200	348	-.197	.051	.145	-.373
200	349	-.008	.151	.427	-1.028
200	350	.012	.082	.342	-.521
200	352	.054	.085	.397	-.355
200	353	-.028	.059	.334	-.308
200	354	-.045	.057	.290	-.264
200	355	-.059	.058	.289	-.277
200	359	.082	.066	.434	-.192
200	360	-.038	.067	.384	-.316
200	361	.050	.065	.373	-.257
200	362	.087	.089	.534	-.175
200	363	.065	.090	.478	-.266
200	364	.046	.086	.514	-.497
200	365	-.400	.094	.006	-1.289
200	366	-.632	.109	-.240	-1.494
200	367	-.215	.085	.114	-1.018
200	368	-.075	.072	.214	-.433
200	369	.051	.060	.389	-.217
200	370	.079	.061	.467	-.073
200	371	.054	.081	.421	-.186
200	372	.034	.080	.455	-.186
200	373	-.509	.142	.046	-1.202
200	374	.073	.076	.657	-.184
200	375	.063	.067	.427	-.120
200	376	-.078	.079	.194	-.574
200	377	-.201	.061	.023	-.486
200	378	-.088	.058	.146	-.338
200	379	-.091	.057	.136	-.286
200	380	-.076	.075	.317	-.343
200	381	-.068	.075	.285	-.262
200	382	-.510	.160	.019	-1.251
200	383	-.136	.099	.271	-.828
200	384	-.190	.057	.091	-.609
200	385	-.737	.155	-.187	-1.589
200	386	-.190	.122	.204	-.926

APPENDIX A -- PRESSURE DATA: BASS BROTHERS BUILDING - PHASE I, DALLAS, TEXAS -- CONFIGURATION A

WD	TAP	CPMEAN	CPRMS	CPMAX	CPMIN
200	387	-.657	.153	-.225	-1.391
200	388	-.569	.107	-.227	-1.082
200	389	-.164	.054	.188	-.326
200	390	-.418	.059	-.140	-.642
200	391	-.425	.053	-.215	-.654
200	392	-.600	.121	-.317	-1.096
200	393	-.564	.073	-.285	-.910
200	401	-.217	.114	.238	-.795
200	402	-.199	.139	.386	-.852
200	403	-.403	.130	.154	-.840
200	404	-.091	.166	.438	-.563
200	405	.131	.182	.815	-.388
200	406	.063	.236	.987	-.562
200	407	.240	.238	1.104	-.662
200	408	-.361	.163	.076	-1.139
200	409	-.062	.209	.736	-.659
200	410	.026	.210	.829	-.661
200	411	.165	.211	.918	-.412
200	412	-.006	.193	.728	-.884
200	413	.047	.277	.959	-1.194
200	414	.290	.190	1.130	-.421
200	415	.216	.206	.858	-.332
200	416	.283	.192	1.015	-.233
200	417	.237	.178	.978	-.260
200	418	.240	.185	1.089	-.309
200	419	.271	.185	1.099	-.293
200	420	.282	.181	.969	-.203
200	421	.041	.186	.690	-.783
200	422	.003	.194	.703	-1.192
200	423	.038	.241	.841	-1.703
200	424	-.433	.194	.277	-1.267
200	425	-.087	.138	.641	-.444
200	426	.103	.131	.738	-.284
200	427	.208	.127	.781	-.142
200	428	.166	.114	.737	-.135
200	429	.080	.155	.690	-.319
200	430	.185	.120	.756	-.120
200	431	.222	.137	.958	-.523
200	432	.191	.138	.789	-.703
200	433	-.490	.138	-.095	-1.104
200	434	-.126	.110	.455	-.447
200	435	.047	.114	.675	-.278
200	436	.148	.113	.647	-.118
200	437	.128	.100	.580	-.111
200	438	.131	.102	.609	-.111
200	439	.009	.083	.342	-.151
200	440	.166	.102	.650	-.194
200	441	.147	.111	.704	-.353
200	442	.011	.120	.689	-.348
200	443	.128	.092	1.000	-.123

WD	TAP	CPMEAN	CPRMS	CPMAX	CPMIN
200	444	.076	.091	.656	-.462
200	445	.005	.086	.434	-.555
200	446	-.023	.086	.344	-.421
200	447	.006	.114	.716	-.456
200	449	-.370	.100	.213	-.842
200	450	.055	.078	.416	-.205
200	451	-.088	.113	.488	-.636
200	452	-.106	.122	.467	-.683
200	453	-.040	.086	.539	-.378
200	454	-.517	.125	-.155	-1.128
200	455	-.300	.099	.287	-.594
200	456	-.059	.081	.521	-.290
200	457	.053	.082	.467	-.153
200	458	.066	.078	.608	-.130
200	459	.044	.072	.521	-.173
200	460	.004	.059	.290	-.259
200	461	-.084	.130	.570	-.603
200	462	-.470	.108	-.109	-1.009
200	463	-.152	.076	.334	-.430
200	464	-.019	.104	.522	-.273
200	465	-.042	.129	.594	-.383
200	466	-.309	.066	-.024	-.627
200	467	-.086	.095	.338	-.592
200	468	-.127	.066	.104	-.562
200	469	-.193	.067	.128	-.652
200	470	.013	.076	.410	-.242
200	471	.061	.083	.512	-.256
200	472	-.445	.087	-.162	-.886
200	473	-.420	.067	-.207	-.707
200	474	-.270	.056	-.057	-.692
200	475	-.209	.055	.035	-.392
200	476	-.157	.081	.205	-.550
200	477	-.039	.123	.611	-.326
200	478	-.052	.095	.360	-.486
200	479	-.418	.060	-.162	-.738
200	480	-.202	.076	.139	-.409
200	481	-.042	.136	.664	-.399
200	482	-.103	.094	.329	-.331
200	483	-.161	.056	.145	-.395
200	484	-.040	.155	.741	-.396
200	702	.068	.074	.476	-.118
200	703	.061	.083	.606	-.141
200	704	-.048	.069	.450	-.326
200	801	-.385	.130	-.030	-1.390
200	802	-.412	.114	.019	-.964
200	803	-.298	.122	.228	-.735
200	804	-.166	.162	.328	-.787
200	805	-.310	.085	.006	-.735
200	806	-.600	.196	-.031	-1.424
200	807	-.485	.152	-.076	-1.169

WD	TAP	CPMEAN	CPRMS	CPMAX	CPMIN
200	808	-.012	.198	.462	-1.246
200	809	-.361	.097	-.069	-.857
200	810	-.424	.159	.136	-.976
200	811	-.736	.294	.233	-2.199
200	905	-.584	.110	-.216	-1.232
200	906	-.475	.077	-.249	-.829
200	907	-.713	.132	-.246	-1.711
200	908	-.612	.091	-.341	-1.122
200	909	-.014	.090	.447	-.249
200	910	-.538	.065	-.336	-.814
200	911	-.181	.063	.122	-.546
200	912	-.194	.050	-.028	-.419
200	913	-.323	.059	-.099	-.568
200	915	-.114	.063	.229	-.467
210	101	-.397	.080	-.153	-.875
210	102	-.396	.085	-.147	-.916
210	103	-.399	.117	-.031	-1.116
210	104	-.404	.103	-.029	-1.108
210	105	-.448	.098	-.102	-1.168
210	106	-.438	.082	-.202	-.921
210	107	-.415	.072	-.180	-.722
210	108	-.409	.080	-.141	-.899
210	109	-.394	.074	-.137	-.802
210	110	-.476	.140	-.102	-1.432
210	111	-.457	.113	-.061	-1.252
210	112	-.442	.084	-.227	-1.107
210	113	-.426	.070	-.172	-.743
210	114	-.412	.062	-.196	-.731
210	115	-.373	.062	-.187	-.638
210	116	-.493	.120	-.160	-1.501
210	117	-.463	.090	-.158	-1.111
210	118	-.471	.077	-.172	-1.013
210	119	-.445	.068	-.227	-.731
210	120	-.422	.071	-.224	-.725
210	121	-.399	.067	-.210	-.701
210	122	-.398	.063	-.204	-.773
210	123	-.394	.065	-.208	-.733
210	124	-.501	.122	-.142	-1.188
210	125	-.483	.093	-.241	-1.150
210	126	-.469	.085	-.227	-.939
210	127	-.474	.075	-.267	-.855
210	128	-.478	.075	-.258	-.892
210	129	-.622	.082	-.389	-1.002
210	130	-.449	.069	-.238	-.807
210	131	-.463	.070	-.252	-.780
210	133	-.378	.103	.129	-.973
210	134	-.418	.108	.187	-.886
210	135	-.461	.119	.118	-1.017
210	136	-.506	.108	-.233	-1.053
210	137	-.473	.106	-.198	-1.059

APPENDIX A -- PRESSURE DATA: BASS BROTHERS BUILDING - PHASE I, DALLAS, TEXAS -- CONFIGURATION A

WD	TAP	CPMEAN	CPRMS	CPMAX	CPMIN
210	139	-.661	.114	-.389	-1.209
210	140	-.434	.113	-.114	-.936
210	141	-.307	.135	.282	-.960
210	142	-.339	.134	.244	-.993
210	143	-.377	.110	.036	-.979
210	144	-.455	.106	-.106	-1.106
210	145	-.470	.109	-.173	-1.056
210	146	-.483	.115	-.160	-1.384
210	147	-.651	.128	-.332	-1.672
210	148	-.513	.106	-.040	-1.126
210	149	-.510	.099	-.130	-1.039
210	150	-.527	.115	-.175	-1.148
210	151	-.609	.130	-.172	-1.359
210	152	-.431	.105	-.144	-.935
210	153	-.494	.132	-.162	-1.338
210	154	-.486	.117	-.184	-.958
210	155	-.499	.141	-.140	-1.373
210	156	-.660	.130	-.197	-1.548
210	157	-.645	.137	-.156	-1.670
210	158	-.691	.147	-.278	-1.475
210	159	-.746	.205	-.215	-1.959
210	160	-.510	.161	-.078	-1.250
210	161	-.839	.250	-.273	-2.386
210	162	-.613	.116	-.216	-1.176
210	163	-.594	.124	-.191	-1.488
210	164	-.758	.149	-.332	-1.696
210	165	-.925	.219	-.383	-2.054
210	166	-.637	.148	-.107	-1.920
210	167	-.566	.119	-.035	-1.735
210	168	-.706	.126	-.288	-1.389
210	169	-.775	.123	-.451	-1.420
210	170	-.185	.057	.106	-.359
210	171	-.205	.049	.003	-.395
210	201	-.320	.145	.061	-.833
210	202	-.543	.136	-.209	-1.242
210	203	-.350	.075	-.124	-.702
210	204	-.349	.089	-.060	-.984
210	205	-.316	.092	-.024	-.991
210	206	-.369	.091	-.098	-.797
210	207	-.370	.095	-.097	-.887
210	208	-.351	.071	-.064	-.652
210	209	-.331	.063	-.071	-.580
210	210	-.320	.062	-.057	-.550
210	211	-.330	.059	-.097	-.537
210	212	-.322	.056	-.136	-.575
210	213	-.314	.057	-.145	-.572
210	214	-.560	.055	-.300	-.785
210	215	-.335	.049	-.158	-.510
210	216	-.348	.048	-.194	-.527
210	217	-.341	.046	-.192	-.576

WD	TAP	CPMEAN	CPRMS	CPMAX	CPMIN
210	218	-.359	.045	-.239	-.584
210	219	-.331	.049	-.184	-.542
210	220	-.339	.057	-.167	-.628
210	221	-.347	.064	-.163	-.685
210	222	-.375	.051	-.242	-.675
210	223	-.537	.054	-.393	-.739
210	224	-.365	.047	-.204	-.553
210	225	-.657	.060	-.475	-.894
210	225	-.657	.060	-.475	-.894
210	226	-.380	.047	-.232	-.576
210	227	-.357	.047	-.170	-.520
210	228	-.380	.054	-.217	-.643
210	229	-.400	.065	-.182	-.674
210	230	-.589	.086	-.359	-1.040
210	232	-.621	.099	-.305	-1.182
210	233	-.700	.109	-.430	-1.299
210	234	-.472	.120	-.200	-1.203
210	235	-.418	.078	-.213	-.953
210	236	-.339	.066	.036	-.708
210	237	-.613	.079	-.359	-.919
210	239	-.396	.076	-.173	-.710
210	240	-.390	.071	-.189	-.656
210	241	-.346	.073	-.153	-.786
210	242	-.359	.073	-.162	-.790
210	243	-.559	.088	-.305	-1.032
210	244	-.404	.063	-.206	-.664
210	245	-.352	.068	-.122	-.683
210	249	-.610	.097	-.356	-1.151
210	250	-.671	.118	-.165	-1.158
210	252	-.489	.097	-.210	-.896
210	253	-.656	.121	-.398	-1.609
210	254	-.357	.068	-.041	-.651
210	255	-.368	.059	-.168	-.721
210	256	-.513	.096	-.114	-.983
210	257	-.595	.141	-.065	-1.320
210	258	-.568	.159	-.097	-1.465
210	259	-.282	.051	-.138	-.507
210	260	-.354	.054	-.193	-.605
210	261	-.330	.085	-.067	-.834
210	262	-.720	.116	-.435	-1.331
210	263	-.581	.091	-.292	-1.061
210	264	-.672	.105	-.271	-1.111
210	265	-.678	.101	-.383	-1.182
210	266	-.597	.043	-.483	-.762
210	267	-.614	.116	-.135	-1.124
210	268	-.661	.144	-.059	-1.296
210	269	-.588	.173	-.081	-2.017
210	270	-.306	.056	-.133	-.521
210	271	-.545	.079	-.305	-.899
210	272	-.482	.076	-.194	-.846

WD	TAP	CPMEAN	CPRMS	CPMAX	CPMIN
210	273	-.634	.117	-.194	-1.268
210	280	-.544	.105	-.145	-1.071
210	301	-.313	.263	.577	-1.007
210	302	-.683	.385	.696	-2.055
210	303	-.523	.183	-.065	-1.198
210	304	-.404	.173	.083	-1.026
210	305	-.252	.139	.083	-.933
210	306	-.304	.107	.132	-.877
210	307	-.334	.106	.008	-.868
210	308	-.444	.099	.005	-.901
210	309	-.193	.133	.268	-.697
210	310	-.214	.155	.696	-.709
210	311	.172	.210	1.141	-.647
210	312	-.386	.096	-.016	-.787
210	313	-.804	.486	.557	-2.425
210	314	-.777	.283	.138	-1.879
210	315	-.579	.247	.143	-1.565
210	316	-.444	.191	.044	-1.364
210	317	-.038	.145	.614	-.766
210	318	-.353	.182	.209	-1.160
210	319	-.129	.155	.435	-.760
210	320	-.029	.136	.534	-.790
210	321	.122	.168	.770	-.502
210	322	-.424	.092	-.138	-.903
210	323	-.241	.165	.372	-.762
210	324	-.249	.203	.677	-1.082
210	325	-.206	.164	.314	-.953
210	326	-.160	.182	.348	-1.048
210	327	-.302	.207	.476	-1.664
210	328	.119	.165	.663	-.623
210	329	-.267	.187	.395	-1.260
210	330	-.250	.104	.280	-.667
210	331	-.217	.201	.563	-1.161
210	332	-.143	.162	.350	-1.062
210	333	-.137	.156	.430	-.736
210	334	-.121	.159	.375	-.950
210	335	-.050	.184	.486	-.994
210	336	.015	.121	.419	-.633
210	337	-.032	.096	.304	-.763
210	338	-.101	.079	.204	-.592
210	339	-.209	.062	.085	-.513
210	340	-.206	.244	.449	-1.343
210	341	-.122	.162	.369	-1.510
210	342	-.085	.146	.369	-1.019
210	343	-.076	.137	.499	-.746
210	344	.022	.140	.514	-.659
210	345	.008	.086	.334	-.536
210	346	-.044	.067	.350	-.351
210	347	-.153	.056	.125	-.392
210	348	-.207	.049	.048	-.443

APPENDIX A -- PRESSURE DATA: BASS BROTHERS BUILDING - PHASE I, DALLAS, TEXAS -- CONFIGURATION A

WD	TAP	CPMEAN	CPRMS	CPMAX	CPMIN
210	349	-.163	.206	.479	-1.485
210	350	-.089	.134	.295	-.984
210	352	-.021	.105	.367	-.664
210	353	-.040	.060	.324	-.291
210	354	-.066	.055	.248	-.289
210	355	-.082	.057	.277	-.303
210	359	.096	.089	.574	-.192
210	360	-.061	.086	.364	-.373
210	361	.006	.077	.503	-.301
210	362	.064	.106	.780	-.196
210	363	.041	.105	.630	-.230
210	364	.019	.100	.813	-.260
210	365	-.449	.086	-.052	-.893
210	366	-.606	.106	-.317	-1.141
210	367	-.272	.068	-.072	-.598
210	368	-.119	.092	.368	-.476
210	369	.013	.076	.361	-.265
210	370	.053	.075	.475	-.144
210	371	.026	.091	.633	-.242
210	372	.006	.085	.470	-.231
210	373	-.601	.149	-.110	-1.231
210	374	.013	.078	.442	-.260
210	375	.039	.076	.351	-.195
210	376	-.102	.100	.402	-.528
210	377	-.198	.078	.083	-.904
210	378	-.124	.077	.279	-.460
210	379	-.101	.090	.293	-.419
210	380	-.071	.124	.588	-.454
210	381	-.132	.060	.125	-.381
210	382	-.654	.158	-.189	-1.377
210	383	-.118	.116	.389	-.696
210	384	-.227	.066	.073	-.521
210	385	-.797	.181	-.349	-2.037
210	386	-.143	.108	.361	-.734
210	387	-.718	.165	-.330	-1.500
210	388	-.639	.125	-.373	-1.272
210	389	-.171	.058	.099	-.330
210	390	-.430	.051	-.221	-.629
210	391	-.428	.060	-.246	-.720
210	392	-.567	.104	-.327	-1.175
210	393	-.564	.093	-.308	-.985
210	401	-.191	.118	.325	-.684
210	402	-.161	.137	.353	-.741
210	403	-.388	.107	.031	-.828
210	404	-.041	.128	.394	-.517
210	405	.199	.152	.750	-.377
210	406	.198	.227	1.027	-.543
210	407	.325	.186	.935	-.258
210	408	-.295	.139	.160	-1.326
210	409	.009	.167	.697	-.582
210	410	.072	.162	.630	-.509
210	411	.308	.184	.871	-.332
210	412	.225	.211	.888	-.410
210	413	.314	.251	1.196	-.627
210	414	.431	.184	.948	-.205
210	415	.349	.175	.931	-.291
210	416	.426	.180	1.003	-.187
210	417	.398	.174	.950	-.139
210	418	.443	.196	1.071	-.129
210	419	.364	.180	1.003	-.239
210	420	.350	.172	1.005	-.144
210	421	.243	.205	.943	-.419
210	422	.209	.205	.936	-.494
210	423	.270	.228	1.038	-.684
210	424	-.373	.229	.334	-1.256
210	425	.024	.156	.617	-.504
210	426	.214	.159	.747	-.298
210	427	.371	.176	1.025	-.151
210	428	.345	.167	.985	-.109
210	429	.253	.183	1.134	-.249
210	430	.374	.180	1.013	-.055
210	431	.360	.177	1.068	-.288
210	432	.300	.163	.910	-.259
210	433	-.469	.191	.190	-1.253
210	434	-.073	.116	.501	-.441
210	435	.097	.114	.571	-.182
210	436	.205	.128	.683	-.164
210	437	.183	.117	.603	-.137
210	438	.196	.129	.688	-.229
210	439	.106	.086	.426	-.049
210	440	.232	.145	.943	-.194
210	441	.200	.148	1.005	-.229
210	442	.102	.149	.992	-.448
210	443	.164	.136	.762	-.254
210	444	.131	.137	.870	-.224
210	445	.063	.116	.610	-.555
210	446	.044	.115	.546	-.551
210	447	.101	.141	.809	-.603
210	449	-.360	.112	.214	-.761
210	450	.116	.092	.521	-.198
210	451	-.025	.115	.476	-.448
210	452	-.020	.118	.537	-.533
210	453	-.011	.117	.606	-.530
210	454	-.557	.175	.137	-1.342
210	455	-.272	.095	.230	-.614
210	456	-.007	.077	.530	-.242
210	457	.122	.092	.636	-.090
210	458	.131	.084	.639	-.071
210	459	.104	.078	.610	-.247
210	460	.035	.066	.415	-.288
210	461	-.020	.106	.671	-.361
210	462	-.502	.151	-.002	-1.267
210	463	-.143	.083	.241	-.483
210	464	.039	.110	.562	-.173
210	465	.030	.137	.688	-.281
210	466	-.325	.095	-.070	-.881
210	467	-.097	.134	.321	-.766
210	468	-.135	.100	.142	-.723
210	469	-.183	.082	.120	-.716
210	470	.041	.090	.527	-.520
210	471	.109	.099	.842	-.372
210	472	-.420	.108	.032	-.954
210	473	-.421	.090	-.123	-.845
210	474	-.277	.063	-.009	-.807
210	475	-.181	.063	.115	-.466
210	476	-.131	.069	.202	-.472
210	477	-.016	.114	.580	-.307
210	478	-.048	.095	.636	-.401
210	479	-.431	.102	.272	-.921
210	480	-.158	.090	.342	-.399
210	481	-.057	.107	.422	-.305
210	482	-.109	.084	.379	-.398
210	483	-.166	.059	.109	-.507
210	484	-.090	.120	.520	-.493
210	702	.132	.085	.610	-.060
210	703	.158	.117	.740	-.091
210	704	-.018	.088	.429	-.232
210	801	-.525	.143	-.150	-1.307
210	802	-.467	.096	-.113	-.890
210	803	-.312	.131	.192	-.746
210	804	-.377	.146	.375	-.932
210	805	-.309	.089	.033	-.718
210	806	-.563	.145	-.105	-1.205
210	807	-.537	.167	-.125	-1.255
210	808	-.372	.251	.401	-1.205
210	809	-.369	.091	-.026	-.755
210	810	-.499	.154	.044	-1.122
210	811	-.763	.268	-.149	-1.781
210	905	-.535	.129	-.024	-1.277
210	906	-.517	.110	-.173	-.988
210	907	-.690	.150	-.142	-1.855
210	908	-.701	.131	-.274	-1.269
210	909	.031	.097	.592	-.231
210	910	-.544	.084	-.291	-.980
210	911	-.181	.069	.105	-.620
210	912	-.254	.049	-.097	-.491
210	913	-.339	.053	-.174	-.561
210	915	-.150	.070	.114	-.508
220	101	-.429	.090	-.171	-.932
220	102	-.444	.100	-.155	-1.123

APPENDIX A -- PRESSURE DATA: BASS BROTHERS BUILDING - PHASE I, DALLAS, TEXAS -- CONFIGURATION A

WD	TAP	CPMEAN	CPRMS	CPMAX	CPMIN
220	103	-.403	.118	-.017	-1.310
220	104	-.405	.107	.000	-1.422
220	105	-.442	.102	-.049	-.951
220	106	-.457	.093	-.150	-1.062
220	107	-.435	.076	-.201	-.834
220	108	-.440	.083	-.162	-.835
220	109	-.434	.079	-.165	-.853
220	110	-.480	.173	-.025	-1.420
220	111	-.467	.129	.103	-1.196
220	112	-.450	.079	-.152	-.883
220	113	-.423	.074	-.182	-.772
220	114	-.412	.074	-.211	-.936
220	115	-.387	.068	-.132	-.806
220	116	-.493	.172	-.094	-1.516
220	117	-.464	.130	-.089	-1.228
220	118	-.460	.102	-.139	-1.017
220	119	-.440	.078	-.211	-.764
220	120	-.434	.081	-.162	-.972
220	121	-.417	.074	-.177	-.755
220	122	-.416	.069	-.204	-.724
220	123	-.409	.068	-.193	-.752
220	124	-.478	.170	-.049	-1.528
220	125	-.495	.133	.133	-1.177
220	126	-.479	.115	.056	-.979
220	127	-.475	.090	-.139	-.846
220	128	-.503	.112	-.197	-1.236
220	129	-.638	.107	-.330	-1.406
220	130	-.473	.090	-.194	-1.079
220	131	-.482	.088	-.218	-1.036
220	133	-.274	.159	.305	-1.010
220	134	-.314	.178	.435	-.894
220	135	-.391	.162	.329	-.965
220	136	-.535	.150	.198	-1.379
220	137	-.553	.153	-.154	-1.523
220	139	-.779	.168	-.317	-1.602
220	140	-.396	.124	.035	-1.164
220	141	-.211	.158	.430	-.703
220	142	-.216	.176	.730	-.938
220	143	-.271	.130	.320	-.851
220	144	-.419	.135	.156	-1.153
220	145	-.533	.152	-.072	-1.420
220	146	-.600	.190	-.182	-1.755
220	147	-.752	.194	-.345	-1.916
220	148	-.498	.119	-.059	-.975
220	149	-.471	.095	-.160	-.865
220	150	-.423	.087	-.055	-.866
220	151	-.481	.130	-.043	-1.252
220	152	-.428	.118	-.118	-.937
220	153	-.599	.187	-.087	-1.588
220	154	-.517	.131	-.132	-1.126
220	155	-.560	.171	-.096	-1.541
220	156	-.484	.106	-.064	-.860
220	157	-.471	.097	-.147	-1.079
220	158	-.574	.146	-.144	-1.367
220	159	-.711	.214	.000	-1.944
220	160	-.578	.166	-.038	-1.241
220	161	-.816	.289	-.115	-2.441
220	162	-.560	.135	-.089	-1.210
220	163	-.584	.164	-.065	-1.427
220	164	-.626	.130	-.107	-1.344
220	165	-.867	.202	-.228	-1.663
220	166	-.494	.102	-.011	-.954
220	167	-.448	.101	-.031	-.913
220	168	-.615	.111	-.246	-1.158
220	169	-.597	.102	-.286	-1.079
220	170	-.085	.088	.348	-.293
220	171	-.086	.105	.404	-.392
220	201	-.509	.120	-.140	-.921
220	202	-.587	.158	-.128	-1.243
220	203	-.345	.081	-.065	-.714
220	204	-.340	.095	-.019	-.899
220	205	-.321	.086	-.054	-1.196
220	206	-.369	.088	-.099	-.889
220	207	-.365	.091	-.068	-1.000
220	208	-.338	.074	-.086	-.655
220	209	-.326	.067	-.087	-.601
220	210	-.315	.066	-.077	-.590
220	211	-.322	.064	-.103	-.585
220	212	-.316	.060	-.136	-.615
220	213	-.313	.058	-.145	-.592
220	214	-.484	.066	-.274	-.936
220	215	-.318	.058	-.107	-.587
220	216	-.326	.056	-.127	-.592
220	217	-.314	.051	-.137	-.508
220	218	-.324	.049	-.166	-.488
220	219	-.313	.045	-.171	-.508
220	220	-.329	.052	-.126	-.538
220	221	-.344	.064	-.129	-.632
220	222	-.346	.060	-.176	-.767
220	223	-.511	.070	-.301	-.865
220	224	-.339	.060	-.178	-.597
220	225	-.486	.068	-.291	-.742
220	225	-.486	.068	-.291	-.742
220	226	-.345	.057	-.201	-.595
220	227	-.326	.053	-.176	-.525
220	228	-.355	.068	-.098	-.597
220	229	-.382	.086	-.102	-.748
220	230	-.615	.112	-.310	-1.699
220	232	-.522	.122	-.110	-1.231
220	233	-.623	.133	-.313	-1.320
220	234	-.545	.151	-.174	-1.369
220	235	-.430	.092	-.048	-.852
220	236	-.303	.077	-.016	-.663
220	237	-.517	.106	-.173	-1.247
220	239	-.362	.090	-.105	-.734
220	240	-.344	.090	-.063	-.697
220	241	-.385	.093	-.131	-.983
220	242	-.395	.090	-.167	-1.263
220	243	-.565	.106	-.308	-1.181
220	244	-.398	.076	-.162	-.879
220	245	-.306	.077	-.043	-.665
220	249	-.626	.105	-.316	-1.174
220	250	-.644	.133	-.318	-1.279
220	252	-.497	.108	-.233	-1.048
220	253	-.657	.130	-.377	-1.449
220	254	-.360	.067	-.132	-.651
220	255	-.369	.069	-.094	-.627
220	256	-.456	.133	.120	-1.062
220	257	-.579	.200	.042	-1.442
220	258	-.588	.203	-.057	-1.838
220	259	-.270	.049	-.125	-.483
220	260	-.348	.063	-.147	-.676
220	261	-.330	.073	-.132	-.675
220	262	-.589	.115	-.250	-1.243
220	263	-.582	.104	-.264	-1.053
220	264	-.595	.110	-.262	-1.198
220	265	-.535	.111	-.168	-1.012
220	266	-.552	.139	-.028	-1.231
220	267	-.592	.154	.004	-1.310
220	268	-.598	.160	.099	-1.710
220	269	-.646	.228	-.064	-2.065
220	270	-.362	.068	-.136	-.615
220	271	-.516	.097	-.268	-1.031
220	272	-.500	.109	-.076	-1.118
220	273	-.515	.123	-.134	-1.099
220	280	-.502	.158	.025	-1.085
220	301	-.597	.186	.293	-1.320
220	302	-.881	.246	.119	-1.834
220	303	-.690	.166	-.199	-1.355
220	304	-.652	.169	-.150	-1.260
220	305	-.478	.152	-.058	-1.072
220	306	-.330	.104	.111	-.841
220	307	-.346	.101	.018	-1.024
220	308	-.455	.098	-.041	-1.135
220	309	-.416	.123	.051	-.858
220	310	-.410	.140	.415	-.861
220	311	.161	.296	.950	-.910
220	312	-.395	.104	-.066	-.882
220	313	-1.104	.352	.013	-2.518
220	314	-.961	.231	-.311	-2.251

APPENDIX A -- PRESSURE DATA: BASS BROTHERS BUILDING - PHASE I, DALLAS, TEXAS -- CONFIGURATION A

WD	TAP	CPMEAN	CPRMS	CPMAX	CPMIN
220	315	-.896	.193	-.308	-1.625
220	316	-.822	.225	-.245	-1.756
220	317	-.150	.128	.304	-.963
220	318	-.528	.174	.009	-1.136
220	319	-.347	.146	.140	-.911
220	320	-.266	.163	.228	-1.065
220	321	-.059	.235	.761	-.931
220	322	-.402	.097	.055	-.808
220	323	-.280	.153	.284	-.799
220	324	-.338	.138	.371	-1.537
220	325	-.329	.138	.459	-.937
220	326	-.313	.141	.135	-1.088
220	327	-.472	.175	.137	-1.524
220	328	-.052	.277	.802	-1.197
220	329	-.199	.179	.447	-1.228
220	330	-.243	.134	.190	-1.343
220	331	-.361	.153	.212	-1.482
220	332	-.345	.157	.197	-1.399
220	333	-.350	.150	.129	-1.064
220	334	-.310	.162	.331	-.928
220	335	-.287	.226	.494	-1.052
220	336	-.138	.225	.474	-.911
220	337	-.099	.184	.446	-.818
220	338	-.129	.142	.331	-.816
220	339	-.204	.105	.269	-.897
220	340	-.336	.232	.419	-1.718
220	341	-.302	.220	.256	-1.551
220	342	-.267	.184	.262	-1.166
220	343	-.261	.174	.380	-.983
220	344	-.215	.227	.481	-.971
220	345	-.103	.182	.399	-.964
220	346	-.088	.140	.348	-.788
220	347	-.149	.113	.390	-.757
220	348	-.192	.094	.219	-.831
220	349	-.377	.245	.228	-1.826
220	350	-.353	.267	.138	-1.733
220	352	-.222	.191	.274	-1.100
220	353	-.061	.099	.422	-.545
220	354	-.081	.088	.380	-.491
220	355	-.091	.091	.286	-.503
220	359	-.053	.123	.384	-.481
220	360	-.193	.110	.242	-.626
220	361	-.145	.165	.302	-1.201
220	362	-.010	.120	.638	-.356
220	363	-.033	.131	.661	-.574
220	364	-.038	.129	.542	-.519
220	365	-.463	.086	-.183	-.992
220	366	-.611	.118	-.345	-1.194
220	367	-.308	.078	-.078	-.730
220	368	-.253	.101	.157	-.666
220	369	-.103	.085	.277	-.409
220	370	-.051	.080	.302	-.325
220	371	-.057	.097	.461	-.372
220	372	-.066	.098	.452	-.399
220	373	-.553	.125	-.163	-1.156
220	374	-.099	.083	.307	-.369
220	375	-.072	.085	.567	-.478
220	376	-.264	.150	.208	-.940
220	377	-.247	.149	.073	-1.077
220	378	-.296	.142	.098	-.899
220	379	-.238	.106	.223	-.635
220	380	-.186	.096	.268	-.499
220	381	-.140	.074	.208	-.374
220	382	-.585	.138	-.190	-1.287
220	383	-.270	.153	.101	-1.036
220	384	-.277	.061	-.013	-.552
220	385	-.639	.138	-.248	-1.402
220	386	-.164	.088	.227	-.590
220	387	-.668	.132	-.265	-1.250
220	388	-.599	.102	-.287	-1.172
220	389	-.194	.053	.045	-.415
220	390	-.323	.051	-.154	-.534
220	391	-.385	.063	-.185	-.656
220	392	-.530	.113	-.201	-1.090
220	393	-.492	.108	-.175	-.926
220	401	-.057	.152	.473	-.543
220	402	-.041	.159	.497	-.590
220	403	-.169	.145	.408	-.708
220	404	.025	.134	.531	-.380
220	405	.242	.138	.703	-.228
220	406	.255	.166	.769	-.311
220	407	.297	.151	.827	-.308
220	408	-.122	.135	.352	-.804
220	409	.151	.174	.690	-.483
220	410	.155	.166	.702	-.444
220	411	.400	.191	1.035	-.147
220	412	.356	.174	.941	-.247
220	413	.401	.191	.964	-.248
220	414	.450	.190	1.004	-.394
220	415	.328	.181	.914	-.483
220	416	.478	.178	1.086	-.032
220	417	.465	.177	1.081	-.054
220	418	.501	.185	1.150	-.038
220	419	.367	.177	1.050	-.252
220	420	.366	.156	.912	-.254
220	421	.422	.183	.944	-.143
220	422	.407	.192	.949	-.207
220	423	.430	.200	1.054	-.381
220	424	-.151	.196	.463	-1.138
220	425	.224	.165	.880	-.315
220	426	.360	.163	.870	-.196
220	427	.439	.163	1.026	-.064
220	428	.424	.162	1.030	-.072
220	429	.362	.184	1.012	-.117
220	430	.406	.168	1.070	-.133
220	431	.386	.165	1.068	-.279
220	432	.264	.156	.921	-.370
220	433	-.243	.166	.267	-1.248
220	434	.122	.157	.644	-.354
220	435	.233	.150	.837	-.229
220	436	.278	.142	.828	-.075
220	437	.267	.138	.821	-.043
220	438	.253	.136	.837	-.105
220	439	.133	.138	.655	-.262
220	440	.208	.127	.854	-.179
220	441	.127	.134	.807	-.240
220	442	.166	.155	.840	-.355
220	443	.082	.116	.596	-.333
220	444	.006	.143	.703	-.626
220	445	.121	.121	.589	-.528
220	446	.117	.124	.646	-.650
220	447	.070	.161	.672	-.817
220	449	-.225	.149	.429	-.826
220	450	.156	.091	.567	-.128
220	451	.081	.099	.519	-.211
220	452	-.055	.105	.418	-.568
220	453	-.080	.117	.399	-.574
220	454	-.393	.182	.215	-1.215
220	455	-.134	.134	.393	-.716
220	456	.089	.106	.606	-.232
220	457	.173	.092	.627	-.119
220	458	.187	.098	.639	-.053
220	459	.103	.070	.399	-.101
220	460	.072	.075	.459	-.153
220	461	-.045	.099	.387	-.592
220	462	-.369	.165	.180	-1.083
220	463	-.032	.110	.416	-.551
220	464	.143	.138	.839	-.176
220	465	.060	.120	.767	-.250
220	466	-.292	.113	.307	-1.012
220	467	-.124	.141	.411	-.751
220	468	-.140	.132	.340	-.885
220	469	-.153	.104	.259	-.741
220	470	-.047	.109	.341	-.551
220	471	.051	.083	.400	-.440
220	472	-.327	.111	.159	-.814
220	473	-.406	.093	-.043	-.641
220	474	-.235	.073	.037	-.702
220	475	-.088	.073	.179	-.656
220	476	-.099	.058	.152	-.371

APPENDIX A -- PRESSURE DATA: BASS BROTHERS BUILDING - PHASE I, DALLAS, TEXAS -- CONFIGURATION A

WD	TAP	CPMEAN	CPRMS	CPMAX	CPMIN
220	477	-.073	.087	.254	-.500
220	478	-.150	.098	.333	-.568
220	479	-.269	.135	.295	-.678
220	480	.092	.134	.832	-.272
220	481	.059	.132	.833	-.249
220	482	-.096	.074	.404	-.448
220	483	-.180	.063	.043	-.405
220	484	-.062	.076	.319	-.450
220	702	.156	.081	.545	-.047
220	703	.272	.174	1.226	-.143
220	704	.056	.127	.668	-.390
220	801	-.576	.149	-.221	-1.531
220	802	-.473	.090	-.189	-.937
220	803	-.369	.123	.161	-.901
220	804	-.462	.121	-.023	-1.007
220	805	-.342	.094	.016	-.755
220	806	-.546	.135	-.040	-1.206
220	807	-.544	.161	-.035	-1.354
220	808	-.613	.137	-.160	-1.189
220	809	-.359	.090	.033	-.757
220	810	-.481	.168	.088	-1.241
220	811	-.635	.132	-.215	-1.389
220	905	-.462	.141	.005	-1.308
220	906	-.549	.133	-.055	-1.182
220	907	-.461	.103	-.069	-.992
220	908	-.588	.121	-.111	-1.079
220	909	.139	.120	.767	-.182
220	910	-.467	.083	-.192	-.851
220	911	-.146	.068	.134	-.405
220	912	-.258	.051	-.117	-.481
220	913	-.313	.048	-.145	-.558
220	915	-.285	.118	.022	-.989
230	101	-.468	.118	-.160	-1.049
230	102	-.503	.147	-.122	-1.300
230	103	-.374	.129	.044	-1.040
230	104	-.376	.118	.056	-.983
230	105	-.443	.126	.134	-.966
230	106	-.494	.127	-.146	-1.352
230	107	-.470	.099	-.206	-.904
230	108	-.513	.162	.032	-1.298
230	109	-.490	.147	-.163	-1.712
230	110	-.419	.183	.077	-1.374
230	111	-.442	.169	.335	-1.251
230	112	-.442	.111	.138	-1.077
230	113	-.436	.112	-.045	-1.137
230	114	-.471	.111	-.136	-1.284
230	115	-.416	.087	-.164	-.803
230	116	-.515	.228	.141	-1.666
230	117	-.500	.189	.166	-1.531
230	118	-.491	.147	.205	-1.166
230	119	-.428	.101	-.063	-.907
230	120	-.461	.114	-.173	-1.072
230	121	-.435	.097	-.166	-.920
230	122	-.425	.085	-.180	-.740
230	123	-.414	.081	-.193	-.821
230	124	-.408	.184	.071	-1.461
230	125	-.453	.185	.195	-1.256
230	126	-.446	.171	.435	-1.154
230	127	-.451	.126	.188	-.959
230	128	-.519	.141	-.044	-1.194
230	129	-.705	.155	-.226	-1.718
230	130	-.483	.119	-.202	-1.133
230	131	-.487	.116	-.199	-1.132
230	133	-.133	.158	.380	-.733
230	134	-.124	.207	.659	-.822
230	135	-.209	.199	.439	-1.044
230	136	-.427	.200	.206	-1.278
230	137	-.573	.206	.098	-1.467
230	139	-.910	.225	-.308	-2.281
230	140	-.437	.142	-.066	-1.144
230	141	-.102	.148	.416	-.760
230	142	-.084	.170	.562	-.761
230	143	-.140	.137	.470	-.717
230	144	-.292	.147	.161	-.965
230	145	-.480	.169	.146	-1.318
230	146	-.684	.226	-.064	-1.845
230	147	-.869	.251	-.254	-2.557
230	148	-.482	.104	-.024	-.977
230	149	-.452	.083	-.103	-.872
230	150	-.392	.076	-.116	-.816
230	151	-.379	.114	.071	-.997
230	152	-.380	.131	-.009	-1.280
230	153	-.647	.208	-.112	-1.589
230	154	-.464	.131	-.153	-1.326
230	155	-.520	.147	-.139	-1.271
230	156	-.437	.092	-.073	-.788
230	157	-.427	.082	-.122	-.897
230	158	-.480	.144	.018	-1.160
230	159	-.634	.230	.036	-1.608
230	160	-.482	.169	-.077	-1.395
230	161	-.708	.251	-.130	-2.008
230	162	-.573	.135	-.167	-1.181
230	163	-.603	.162	-.113	-1.452
230	164	-.555	.115	-.189	-1.043
230	165	-.766	.214	-.151	-1.599
230	166	-.473	.093	-.165	-.876
230	167	-.394	.084	-.033	-.832
230	168	-.602	.119	-.272	-1.124
230	169	-.556	.105	-.289	-.989
230	170	.023	.117	.683	-.226
230	171	.035	.125	.619	-.339
230	201	-.514	.109	-.199	-.958
230	202	-.432	.116	-.114	-.993
230	203	-.348	.095	-.082	-.781
230	204	-.333	.091	-.029	-.714
230	205	-.331	.079	-.070	-.613
230	206	-.352	.096	-.063	-.834
230	207	-.342	.105	-.035	-.887
230	208	-.331	.089	-.080	-.767
230	209	-.319	.078	-.065	-.632
230	210	-.302	.074	-.061	-.585
230	211	-.310	.068	-.105	-.582
230	212	-.314	.061	-.136	-.565
230	213	-.319	.059	-.129	-.549
230	214	-.514	.110	-.212	-1.026
230	215	-.319	.088	-.063	-.653
230	216	-.317	.074	-.117	-.637
230	217	-.292	.059	-.096	-.514
230	218	-.297	.054	-.098	-.477
230	219	-.292	.053	-.106	-.527
230	220	-.298	.072	-.086	-.728
230	221	-.325	.087	-.055	-.834
230	222	-.324	.078	-.119	-.736
230	223	-.494	.085	-.234	-.862
230	224	-.319	.068	-.100	-.569
230	225	-.442	.072	-.244	-.845
230	225	-.442	.072	-.244	-.845
230	226	-.321	.061	-.150	-.571
230	227	-.312	.057	-.136	-.587
230	228	-.327	.080	-.058	-.626
230	229	-.356	.104	-.018	-.928
230	230	-.588	.115	-.303	-1.229
230	232	-.471	.103	-.205	-1.134
230	233	-.552	.115	-.249	-1.137
230	234	-.504	.146	-.075	-1.258
230	235	-.411	.085	-.089	-.888
230	236	-.299	.081	-.006	-.638
230	237	-.460	.089	-.127	-.874
230	239	-.332	.086	-.117	-.735
230	240	-.293	.079	-.006	-.690
230	241	-.365	.083	-.120	-.740
230	242	-.377	.077	-.139	-.853
230	243	-.547	.102	-.264	-.966
230	244	-.377	.074	-.126	-.759
230	245	-.297	.080	.021	-.704
230	249	-.591	.100	-.330	-.997
230	250	-.570	.125	-.302	-1.170
230	252	-.484	.108	-.164	-1.012
230	253	-.624	.114	-.342	-1.281
230	254	-.389	.077	-.130	-.691

APPENDIX A -- PRESSURE DATA: BASS BROTHERS BUILDING - PHASE I, DALLAS, TEXAS -- CONFIGURATION A

WD	TAP	CPMEAN	CPRMS	CPMAX	CPMIN
230	255	-.358	.073	-.119	-.663
230	256	-.439	.130	-.045	-1.203
230	257	-.558	.185	-.002	-1.662
230	258	-.593	.192	-.050	-1.547
230	259	-.288	.058	-.138	-.545
230	260	-.342	.066	-.172	-.611
230	261	-.332	.078	-.094	-.629
230	262	-.560	.119	-.296	-1.208
230	263	-.610	.118	-.330	-1.173
230	264	-.618	.121	-.263	-1.215
230	265	-.524	.114	-.223	-1.153
230	266	-.566	.141	-.063	-1.245
230	267	-.591	.155	.079	-1.247
230	268	-.608	.139	-.035	-1.287
230	269	-.638	.188	-.079	-2.709
230	270	-.416	.085	-.126	-.805
230	271	-.515	.108	-.186	-1.014
230	272	-.527	.114	-.152	-1.048
230	273	-.523	.123	-.056	-1.099
230	280	-.503	.163	.067	-1.249
230	301	-.689	.154	-.249	-1.499
230	302	-.650	.162	-.087	-1.466
230	303	-.642	.138	-.211	-1.192
230	304	-.633	.131	-.222	-1.141
230	305	-.583	.127	-.183	-1.084
230	306	-.359	.097	.116	-.839
230	307	-.354	.099	-.068	-.826
230	308	-.493	.122	-.145	-1.179
230	309	-.496	.095	-.161	-.849
230	310	-.502	.105	-.142	-.947
230	311	-.288	.244	.693	-.949
230	312	-.451	.131	-.026	-1.155
230	313	-.748	.243	-.203	-2.152
230	314	-.824	.176	-.342	-1.880
230	315	-.838	.170	-.355	-1.667
230	316	-.895	.192	-.361	-1.946
230	317	-.179	.106	.146	-.559
230	318	-.563	.134	-.067	-1.099
230	319	-.472	.115	-.120	-.915
230	320	-.452	.126	-.048	-1.094
230	321	-.391	.156	.453	-.962
230	322	-.373	.104	.034	-.764
230	323	-.317	.137	.328	-.966
230	324	-.379	.104	-.011	-.813
230	325	-.386	.107	-.037	-.832
230	326	-.423	.105	-.092	-.894
230	327	-.599	.128	-.186	-1.146
230	328	-.394	.203	.637	-1.159
230	329	-.366	.187	.258	-1.061
230	330	-.365	.177	.161	-1.100

WD	TAP	CPMEAN	CPRMS	CPMAX	CPMIN
230	331	-.403	.101	-.036	-1.111
230	332	-.416	.109	.028	-.919
230	333	-.430	.108	-.009	-.898
230	334	-.437	.119	-.025	-.977
230	335	-.458	.140	.180	-1.116
230	336	-.421	.185	.446	-1.045
230	337	-.360	.196	.356	-1.053
230	338	-.309	.191	.317	-1.100
230	339	-.307	.180	.166	-1.463
230	340	-.503	.180	.052	-1.565
230	341	-.512	.183	.085	-1.639
230	342	-.531	.191	.056	-1.624
230	343	-.537	.187	.019	-1.578
230	344	-.571	.202	.340	-1.440
230	345	-.346	.234	.428	-1.223
230	346	-.206	.214	.453	-.962
230	347	-.183	.176	.269	-.870
230	348	-.186	.131	.228	-.812
230	349	-.678	.275	-.000	-2.604
230	350	-.734	.309	.014	-2.916
230	352	-.516	.212	.363	-1.326
230	353	-.059	.125	.354	-.571
230	354	-.079	.106	.269	-.590
230	355	-.074	.110	.335	-.524
230	359	-.167	.116	.231	-.619
230	360	-.297	.096	-.027	-.663
230	361	-.314	.180	.194	-1.131
230	362	-.095	.111	.520	-.506
230	363	-.128	.120	.551	-.610
230	364	-.116	.127	.459	-.499
230	365	-.486	.089	-.232	-.899
230	366	-.603	.110	-.298	-1.108
230	367	-.321	.078	-.046	-.666
230	368	-.353	.098	-.090	-.691
230	369	-.176	.080	.086	-.469
230	370	-.116	.077	.133	-.427
230	371	-.125	.093	.280	-.489
230	372	-.118	.099	.554	-.461
230	373	-.551	.115	-.172	-1.023
230	374	-.184	.074	.065	-.472
230	375	-.157	.077	.106	-.482
230	376	-.427	.157	.009	-1.248
230	377	-.367	.160	-.016	-1.101
230	378	-.468	.150	-.063	-1.121
230	379	-.312	.102	-.028	-.701
230	380	-.269	.087	.029	-.631
230	381	-.134	.100	.335	-.447
230	382	-.516	.126	-.076	-1.091
230	383	-.410	.188	.003	-1.498
230	384	-.276	.065	-.106	-.657

WD	TAP	CPMEAN	CPRMS	CPMAX	CPMIN
230	385	-.593	.122	-.282	-1.313
230	386	-.203	.091	.169	-.628
230	387	-.630	.134	-.288	-1.639
230	388	-.556	.108	-.237	-1.167
230	389	-.226	.056	-.043	-.449
230	390	-.314	.052	-.147	-.531
230	391	-.380	.064	-.137	-.706
230	392	-.523	.111	-.237	-1.262
230	393	-.508	.109	-.236	-1.115
230	401	.148	.168	.690	-.464
230	402	.147	.177	.787	-.538
230	403	-.096	.165	.596	-.631
230	404	.052	.136	.589	-.420
230	405	.218	.134	.725	-.146
230	406	.216	.161	.828	-.259
230	407	.246	.137	.698	-.245
230	408	-.066	.155	.467	-.727
230	409	.176	.170	.728	-.380
230	410	.150	.162	.721	-.356
230	411	.422	.178	1.041	-.011
230	412	.358	.174	.921	-.133
230	413	.330	.184	.925	-.337
230	414	.310	.224	.952	-.447
230	415	.352	.177	.903	-.489
230	416	.473	.158	1.062	.054
230	417	.475	.158	1.039	.059
230	418	.495	.158	.995	.090
230	419	.327	.164	1.005	-.310
230	420	.296	.139	.937	-.162
230	421	.452	.170	.955	-.043
230	422	.444	.173	.954	-.086
230	423	.368	.177	1.120	-.171
230	424	-.040	.147	.449	-.807
230	425	.296	.148	.812	-.135
230	426	.401	.143	.876	.038
230	427	.460	.149	.916	.077
230	428	.457	.147	.915	.080
230	429	.406	.170	1.070	-.014
230	430	.420	.146	.970	.052
230	431	.348	.135	.858	-.074
230	432	.184	.116	.608	-.165
230	433	-.133	.134	.345	-.852
230	434	.242	.137	.833	-.171
230	435	.315	.125	.800	-.032
230	436	.351	.123	.813	.045
230	437	.356	.125	.816	.046
230	438	.348	.128	.850	.031
230	439	.242	.149	.773	-.160
230	440	.223	.114	.698	-.071
230	441	.090	.106	.530	-.243

APPENDIX A -- PRESSURE DATA: BASS BROTHERS BUILDING - PHASE I, DALLAS, TEXAS -- CONFIGURATION A

WD	TAP	CPMEAN	CPRMS	CPMAX	CPMIN
230	442	.228	.158	.952	-.194
230	443	.077	.121	.544	-.491
230	444	-.070	.133	.485	-.709
230	445	.221	.108	.650	-.301
230	446	.215	.111	.670	-.284
230	447	.143	.146	.663	-.429
230	449	-.092	.130	.372	-.596
230	450	.197	.084	.575	-.026
230	451	.137	.096	.523	-.125
230	452	-.050	.124	.479	-.565
230	453	-.061	.120	.386	-.589
230	454	-.288	.159	.377	-.945
230	455	-.023	.127	.611	-.392
230	456	.162	.090	.537	-.123
230	457	.215	.082	.580	-.020
230	458	.226	.101	.659	-.104
230	459	.102	.070	.481	-.085
230	460	.080	.074	.423	-.178
230	461	-.059	.118	.436	-.567
230	462	-.268	.163	.407	-.924
230	463	.027	.096	.373	-.324
230	464	.213	.149	.824	-.157
230	465	.050	.133	.753	-.277
230	466	-.236	.135	.281	-.909
230	467	-.087	.135	.420	-.579
230	468	-.105	.124	.489	-.624
230	469	-.141	.089	.249	-.633
230	470	-.116	.108	.183	-.716
230	471	-.001	.083	.327	-.354
230	472	-.223	.131	.322	-.783
230	473	-.348	.100	.042	-.771
230	474	-.164	.066	.137	-.701
230	475	-.027	.072	.265	-.328
230	476	-.080	.049	.138	-.252
230	477	-.130	.103	.254	-.552
230	478	-.240	.106	.106	-.700
230	479	-.129	.134	.431	-.504
230	480	.203	.128	.718	-.104
230	481	.202	.143	.745	-.176
230	482	-.114	.094	.206	-.598
230	483	-.219	.073	.046	-.528
230	484	-.064	.067	.390	-.308
230	702	.224	.084	.604	-.002
230	703	.336	.167	1.154	-.077
230	704	.117	.124	.677	-.242
230	801	-.515	.115	-.184	-1.492
230	802	-.457	.097	-.169	-.925
230	803	-.401	.143	.243	-1.584
230	804	-.478	.137	-.008	-1.092
230	805	-.401	.113	.001	-.880

WD	TAP	CPMEAN	CPRMS	CPMAX	CPMIN
230	806	-.535	.135	-.046	-1.172
230	807	-.430	.116	-.017	-.908
230	808	-.590	.118	-.233	-1.084
230	809	-.346	.111	.104	-.937
230	810	-.391	.137	.096	-1.025
230	811	-.563	.111	-.220	-1.332
230	905	-.531	.183	-.004	-1.334
230	906	-.506	.136	-.145	-1.295
230	907	-.427	.087	-.104	-.875
230	908	-.464	.112	.006	-.890
230	909	.198	.126	.907	-.101
230	910	-.475	.084	-.169	-.873
230	911	-.131	.070	.132	-.414
230	912	-.264	.057	-.115	-.474
230	913	-.332	.056	-.157	-.579
230	915	-.381	.131	-.094	-1.016
240	101	-.573	.144	-.127	-1.263
240	102	-.648	.196	-.187	-1.704
240	103	-.317	.113	.082	-.871
240	104	-.312	.114	.029	-.884
240	105	-.358	.135	.204	-.885
240	106	-.494	.146	.187	-1.096
240	107	-.528	.126	-.142	-1.069
240	108	-.626	.245	.264	-1.741
240	109	-.648	.266	-.009	-1.994
240	110	-.324	.114	.038	-1.049
240	111	-.245	.211	.501	-1.200
240	112	-.272	.164	.318	-.866
240	113	-.433	.162	.298	-1.307
240	114	-.521	.140	-.093	-1.290
240	115	-.474	.124	-.027	-1.088
240	116	-.391	.181	.103	-1.321
240	117	-.391	.213	.466	-1.374
240	118	-.412	.190	.608	-1.081
240	119	-.406	.146	.292	-1.033
240	120	-.506	.162	.073	-1.358
240	121	-.486	.137	-.061	-1.155
240	122	-.456	.110	-.093	-.985
240	123	-.453	.102	-.165	-.928
240	124	-.316	.134	.147	-1.139
240	125	-.298	.226	.506	-1.158
240	126	-.293	.240	.576	-1.068
240	127	-.340	.178	.303	-.918
240	128	-.521	.195	.228	-1.454
240	129	-.692	.204	-.035	-1.816
240	130	-.536	.151	-.181	-1.327
240	131	-.527	.145	-.175	-1.285
240	133	-.095	.124	.405	-.626
240	134	-.012	.155	.748	-.656
240	135	-.052	.157	.555	-.639

WD	TAP	CPMEAN	CPRMS	CPMAX	CPMIN
240	136	-.259	.184	.378	-1.006
240	137	-.450	.230	.171	-1.591
240	139	-.804	.244	-.226	-2.081
240	140	-.489	.151	-.075	-1.211
240	141	-.085	.112	.758	-.510
240	142	-.055	.136	.591	-.482
240	143	-.076	.108	.477	-.479
240	144	-.185	.117	.303	-.781
240	145	-.372	.178	.157	-1.084
240	146	-.649	.253	-.080	-1.859
240	147	-.798	.280	-.192	-3.192
240	148	-.467	.093	-.035	-.838
240	149	-.440	.073	-.141	-.689
240	150	-.364	.057	-.163	-.700
240	151	-.291	.070	.050	-.618
240	152	-.284	.108	.127	-.810
240	153	-.586	.192	-.042	-1.333
240	154	-.353	.105	-.078	-.886
240	155	-.421	.127	-.065	-1.026
240	156	-.435	.074	-.164	-.798
240	157	-.389	.054	-.210	-.630
240	158	-.341	.073	-.134	-.818
240	159	-.466	.156	-.057	-1.260
240	160	-.353	.128	-.009	-1.034
240	161	-.551	.181	-.100	-1.794
240	162	-.548	.117	-.215	-1.196
240	163	-.555	.129	-.183	-1.302
240	164	-.424	.092	-.143	-.795
240	165	-.537	.184	-.035	-1.425
240	166	-.440	.073	-.182	-.738
240	167	-.341	.054	-.030	-.598
240	168	-.486	.096	-.198	-.858
240	169	-.479	.086	-.212	-.863
240	170	.053	.128	.645	-.310
240	171	.081	.122	.588	-.340
240	201	-.433	.086	-.137	-.915
240	202	-.393	.089	-.115	-.777
240	203	-.367	.098	-.084	-.835
240	204	-.349	.081	-.091	-.651
240	205	-.339	.083	-.101	-.690
240	206	-.342	.097	-.053	-.795
240	207	-.324	.099	-.019	-.777
240	208	-.358	.103	-.072	-.819
240	209	-.338	.081	-.090	-.760
240	210	-.316	.072	-.085	-.657
240	211	-.314	.062	-.115	-.569
240	212	-.308	.055	-.153	-.548
240	213	-.308	.057	-.147	-.557
240	214	-.537	.112	-.230	-1.001
240	215	-.320	.078	-.094	-.751

APPENDIX A -- PRESSURE DATA: BASS BROTHERS BUILDING - PHASE I, DALLAS, TEXAS -- CONFIGURATION A

WD	TAP	CPMEAN	CPRMS	CPMAX	CPMIN
240	216	-.300	.061	-.113	-.579
240	217	-.284	.057	-.127	-.523
240	218	-.286	.054	-.144	-.532
240	219	-.287	.053	-.117	-.583
240	220	-.298	.082	-.097	-.710
240	221	-.311	.096	-.067	-.751
240	222	-.330	.083	-.104	-.734
240	223	-.468	.076	-.231	-.847
240	224	-.307	.061	-.109	-.570
240	225	-.418	.064	-.191	-.786
240	225	-.418	.064	-.191	-.786
240	226	-.296	.054	-.130	-.516
240	227	-.288	.056	-.126	-.522
240	228	-.289	.076	-.073	-.642
240	229	-.293	.091	-.046	-.758
240	230	-.539	.097	-.291	-1.095
240	232	-.473	.101	-.177	-.973
240	233	-.525	.099	-.160	-1.081
240	234	-.417	.119	-.009	-.992
240	235	-.359	.074	-.127	-.703
240	236	-.301	.075	-.038	-.624
240	237	-.464	.094	-.123	-1.146
240	239	-.318	.075	-.092	-.753
240	240	-.295	.072	-.066	-.638
240	241	-.361	.069	-.177	-.640
240	242	-.370	.076	-.171	-.687
240	243	-.539	.103	-.273	-1.151
240	244	-.357	.071	-.118	-.744
240	245	-.310	.080	-.036	-.660
240	249	-.570	.095	-.323	-1.046
240	250	-.537	.108	-.258	-1.283
240	252	-.471	.118	-.217	-.968
240	253	-.594	.105	-.311	-1.195
240	254	-.389	.074	-.172	-.692
240	255	-.358	.066	-.103	-.655
240	256	-.448	.121	-.063	-1.019
240	257	-.567	.166	-.095	-1.469
240	258	-.584	.150	-.121	-1.289
240	259	-.289	.056	-.127	-.490
240	260	-.344	.061	-.188	-.640
240	261	-.352	.070	-.130	-.651
240	262	-.556	.115	-.241	-1.229
240	263	-.598	.109	-.355	-1.229
240	264	-.573	.111	-.290	-1.042
240	265	-.498	.105	-.152	-.983
240	266	-.561	.119	-.175	-1.139
240	267	-.569	.124	-.110	-1.108
240	268	-.575	.117	-.107	-1.203
240	269	-.602	.134	-.182	-1.546
240	270	-.452	.080	-.214	-.794
240	271	-.505	.105	-.219	-1.057
240	272	-.529	.122	-.098	-1.144
240	273	-.491	.103	-.203	-.940
240	280	-.527	.155	-.075	-1.295
240	301	-.669	.156	-.214	-1.625
240	302	-.522	.108	-.174	-1.014
240	303	-.537	.104	-.175	-1.026
240	304	-.542	.097	-.231	-.923
240	305	-.541	.105	-.201	-.933
240	306	-.340	.094	-.029	-.838
240	307	-.332	.095	-.024	-.838
240	308	-.545	.144	-.121	-1.205
240	309	-.456	.087	-.168	-.874
240	310	-.445	.088	-.130	-.841
240	311	-.432	.140	.176	-1.095
240	312	-.514	.143	.009	-1.233
240	313	-.626	.153	-.199	-1.677
240	314	-.719	.136	-.363	-1.407
240	315	-.736	.140	-.363	-1.360
240	316	-.793	.162	-.378	-1.616
240	317	-.218	.112	.189	-.896
240	318	-.580	.112	-.238	-1.006
240	319	-.442	.098	-.112	-.841
240	320	-.434	.106	-.066	-1.052
240	321	-.413	.111	-.018	-.941
240	322	-.353	.108	-.045	-.889
240	323	-.375	.149	.062	-1.048
240	324	-.400	.081	-.153	-.688
240	325	-.400	.083	-.154	-.675
240	326	-.407	.086	-.163	-.848
240	327	-.580	.093	-.258	-.951
240	328	-.442	.129	.098	-1.074
240	329	-.426	.135	.154	-1.046
240	330	-.423	.156	.084	-1.246
240	331	-.405	.075	-.184	-.693
240	332	-.411	.080	-.139	-.820
240	333	-.413	.078	-.152	-.723
240	334	-.419	.084	-.133	-.780
240	335	-.435	.089	-.177	-.801
240	336	-.440	.108	-.039	-.972
240	337	-.418	.117	.039	-.887
240	338	-.415	.141	.069	-1.015
240	339	-.421	.174	.101	-1.551
240	340	-.525	.128	-.145	-1.219
240	341	-.538	.130	-.145	-1.170
240	342	-.547	.139	-.207	-1.190
240	343	-.548	.136	-.197	-1.215
240	344	-.571	.151	-.126	-1.484
240	345	-.453	.167	.272	-1.134
240	346	-.358	.174	.284	-1.013
240	347	-.315	.162	.205	-.870
240	348	-.284	.140	.179	-.804
240	349	-.661	.211	-.114	-2.497
240	350	-.701	.231	-.072	-2.592
240	352	-.571	.171	.418	-1.304
240	353	-.197	.145	.303	-.784
240	354	-.192	.126	.212	-.739
240	355	-.186	.133	.205	-.732
240	359	-.270	.117	.088	-.786
240	360	-.362	.090	.012	-.784
240	361	-.461	.195	.126	-1.263
240	362	-.195	.111	.389	-.633
240	363	-.223	.123	.665	-.724
240	364	-.182	.133	.698	-.686
240	365	-.481	.091	-.224	-.907
240	366	-.561	.106	-.306	-1.145
240	367	-.350	.072	-.084	-.703
240	368	-.411	.102	-.131	-.903
240	369	-.268	.088	-.022	-.753
240	370	-.214	.084	.011	-.572
240	371	-.216	.103	.164	-.678
240	372	-.164	.110	.432	-.645
240	373	-.530	.106	-.224	-1.059
240	374	-.274	.096	.009	-.642
240	375	-.249	.095	.047	-.662
240	376	-.529	.182	.018	-1.367
240	377	-.523	.199	-.112	-1.401
240	378	-.549	.170	-.121	-1.207
240	379	-.416	.127	-.112	-1.045
240	380	-.339	.086	-.021	-.651
240	381	-.144	.117	.441	-.450
240	382	-.492	.113	-.079	-.938
240	383	-.641	.234	-.040	-1.653
240	384	-.311	.077	-.108	-.733
240	385	-.591	.114	-.239	-1.260
240	386	-.312	.089	-.045	-.739
240	387	-.642	.132	-.222	-1.494
240	388	-.551	.104	-.219	-1.028
240	389	-.258	.052	-.088	-.476
240	390	-.335	.055	-.152	-.571
240	391	-.387	.068	-.172	-.705
240	392	-.510	.117	-.202	-1.053
240	393	-.518	.104	-.234	-1.085
240	401	.280	.179	.835	-.555
240	402	.289	.188	.872	-.471
240	403	.039	.185	.670	-.619
240	404	.079	.140	.595	-.419
240	405	.206	.131	.624	-.229
240	406	.185	.147	.738	-.389
240	407	.171	.122	.577	-.219

APPENDIX A -- PRESSURE DATA: BASS BROTHERS BUILDING - PHASE I, DALLAS, TEXAS -- CONFIGURATION A

WD	TAP	CPMEAN	CPRMS	CPMAX	CPMIN
240	408	.023	.172	.628	-.556
240	409	.195	.164	.751	-.307
240	410	.159	.156	.697	-.299
240	411	.432	.178	1.000	-.093
240	412	.354	.170	.927	-.256
240	413	.255	.174	.821	-.368
240	414	.136	.206	.821	-.515
240	415	.318	.179	.876	-.461
240	416	.486	.159	1.122	.008
240	417	.485	.160	1.119	.021
240	418	.490	.154	1.091	-.002
240	419	.298	.171	.945	-.420
240	420	.247	.146	.798	-.232
240	421	.420	.174	1.034	-.259
240	422	.395	.177	.959	-.304
240	423	.249	.174	.901	-.333
240	424	.078	.144	.619	-.695
240	425	.369	.163	.914	-.258
240	426	.429	.154	.928	.027
240	427	.468	.145	1.031	.095
240	428	.459	.143	.981	.106
240	429	.367	.165	.923	-.069
240	430	.377	.134	.850	.051
240	431	.290	.128	.852	-.135
240	432	.107	.102	.656	-.278
240	433	-.039	.142	.489	-.832
240	434	.315	.150	.881	-.092
240	435	.336	.130	.805	-.056
240	436	.359	.126	.817	.038
240	437	.358	.127	.821	.047
240	438	.346	.125	.814	.041
240	439	.200	.136	.808	-.184
240	440	.181	.109	.646	-.161
240	441	.038	.103	.489	-.324
240	442	.175	.155	.821	-.366
240	443	.016	.129	.572	-.501
240	444	-.149	.135	.306	-.611
240	445	.250	.114	.693	-.161
240	446	.224	.116	.654	-.285
240	447	.081	.149	.716	-.919
240	449	-.008	.133	.645	-.477
240	450	.203	.086	.548	-.026
240	451	.133	.096	.611	-.114
240	452	-.127	.140	.476	-.723
240	453	-.058	.113	.424	-.573
240	454	-.124	.143	.388	-.915
240	455	.069	.120	.579	-.341
240	456	.196	.095	.570	-.055
240	457	.230	.083	.566	.007
240	458	.200	.094	.557	-.099
240	459	.081	.067	.351	-.181
240	460	.051	.070	.315	-.229
240	461	-.151	.126	.414	-.640
240	462	-.101	.150	.475	-.749
240	463	.091	.099	.575	-.213
240	464	.222	.128	.825	-.075
240	465	-.065	.113	.577	-.389
240	466	-.144	.116	.282	-.646
240	467	-.013	.121	.389	-.517
240	468	-.041	.117	.393	-.551
240	469	-.112	.081	.143	-.528
240	470	-.169	.094	.164	-.590
240	471	-.057	.087	.393	-.358
240	472	-.131	.124	.367	-.563
240	473	-.262	.084	.000	-.758
240	474	-.138	.056	.096	-.457
240	475	-.026	.066	.289	-.393
240	476	-.085	.056	.147	-.371
240	477	-.203	.120	.161	-.903
240	478	-.312	.125	.011	-.921
240	479	-.033	.108	.416	-.425
240	480	.185	.120	.670	-.090
240	481	.129	.130	.782	-.180
240	482	-.224	.117	.190	-.699
240	483	-.297	.087	.022	-.620
240	484	-.066	.066	.218	-.329
240	702	.217	.083	.557	-.011
240	703	.275	.160	1.084	-.136
240	704	.139	.133	.682	-.320
240	801	-.548	.110	-.193	-1.332
240	802	-.487	.108	-.066	-.948
240	803	-.416	.189	.341	-1.384
240	804	-.481	.146	.085	-1.059
240	805	-.433	.127	.103	-.990
240	806	-.534	.146	-.093	-1.245
240	807	-.395	.084	-.061	-.737
240	808	-.537	.115	-.221	-1.247
240	809	-.395	.138	.108	-.995
240	810	-.404	.139	.076	-1.080
240	811	-.502	.099	-.177	-1.144
240	905	-.595	.208	-.068	-1.512
240	906	-.420	.106	-.117	-.922
240	907	-.405	.071	-.169	-.753
240	908	-.349	.096	.028	-.750
240	909	.173	.115	.716	-.107
240	910	-.495	.092	-.227	-.882
240	911	-.140	.067	.132	-.519
240	912	-.291	.055	-.138	-.520
240	913	-.368	.065	-.206	-.649
240	915	-.482	.164	-.107	-1.338
250	101	-.544	.161	-.065	-1.353
250	102	-.808	.231	-.115	-2.169
250	103	-.271	.089	.087	-.767
250	104	-.255	.097	.075	-.754
250	105	-.225	.121	.385	-.722
250	106	-.231	.189	.246	-1.571
250	107	-.450	.167	.216	-1.212
250	108	-.242	.347	.821	-1.961
250	109	-.534	.344	.402	-2.023
250	110	-.346	.106	.021	-.777
250	111	-.022	.188	.713	-.975
250	112	.046	.148	.503	-.527
250	113	-.094	.235	.598	-1.001
250	114	-.272	.230	.276	-1.241
250	115	-.340	.157	.063	-1.369
250	116	-.353	.123	.021	-1.086
250	117	-.125	.198	.503	-.979
250	118	-.064	.254	.668	-.953
250	119	-.129	.233	.566	-.832
250	120	-.284	.237	.449	-1.086
250	121	-.371	.207	.259	-1.292
250	122	-.396	.141	.137	-1.169
250	123	-.388	.121	.142	-.970
250	124	-.315	.103	.042	-.790
250	125	-.141	.161	.431	-.864
250	126	-.044	.204	.645	-.880
250	127	-.068	.184	.447	-.718
250	128	-.225	.209	.285	-1.270
250	129	-.513	.226	.169	-1.499
250	130	-.402	.165	.214	-1.158
250	131	-.393	.151	.260	-1.162
250	133	-.132	.120	.388	-.744
250	134	-.039	.138	.613	-.492
250	135	-.057	.129	.524	-.504
250	136	-.155	.129	.269	-.936
250	137	-.300	.188	.182	-1.168
250	139	-.589	.203	-.120	-1.759
250	140	-.464	.141	-.121	-1.254
250	141	-.091	.111	.402	-.506
250	142	-.051	.125	.527	-.479
250	143	-.068	.086	.283	-.460
250	144	-.124	.081	.178	-.516
250	145	-.228	.127	.132	-.751
250	146	-.402	.200	.116	-1.300
250	147	-.579	.232	-.082	-1.979
250	148	-.455	.079	-.129	-.758
250	149	-.394	.063	-.184	-.634
250	150	-.320	.046	-.113	-.499
250	151	-.234	.055	-.022	-.522
250	152	-.186	.087	.129	-.657

APPENDIX A -- PRESSURE DATA: BASS BROTHERS BUILDING - PHASE I, DALLAS, TEXAS -- CONFIGURATION A

WD	TAP	CPMEAN	CPRMS	CPMAX	CPMIN
250	153	-.338	.169	.183	-1.360
250	154	-.210	.085	.054	-.599
250	155	-.299	.115	.060	-.853
250	156	-.444	.070	-.157	-.820
250	157	-.324	.045	-.164	-.474
250	158	-.234	.052	-.019	-.490
250	159	-.303	.120	.060	-.983
250	160	-.202	.100	.105	-.659
250	161	-.390	.135	-.011	-1.212
250	162	-.514	.119	-.213	-1.171
250	163	-.507	.124	-.160	-1.315
250	164	-.261	.091	.093	-.586
250	165	-.277	.141	.123	-.891
250	166	-.394	.065	-.206	-.759
250	167	-.288	.043	-.145	-.443
250	168	-.312	.115	.058	-.727
250	169	-.385	.104	.038	-.772
250	170	.022	.107	.633	-.348
250	171	.078	.109	.511	-.478
250	201	-.442	.083	-.188	-.817
250	202	-.426	.099	-.125	-.861
250	203	-.369	.082	-.081	-.708
250	204	-.365	.079	-.127	-.655
250	205	-.338	.075	-.106	-.687
250	206	-.305	.062	-.095	-.587
250	207	-.288	.064	-.059	-.591
250	208	-.382	.086	-.117	-1.034
250	209	-.357	.069	-.154	-.649
250	210	-.334	.064	-.108	-.624
250	211	-.324	.058	-.105	-.557
250	212	-.326	.053	-.155	-.548
250	213	-.319	.052	-.159	-.525
250	214	-.527	.086	-.271	-.856
250	215	-.350	.066	-.130	-.605
250	216	-.326	.056	-.134	-.545
250	217	-.299	.054	-.144	-.564
250	218	-.301	.051	-.154	-.571
250	219	-.298	.050	-.148	-.515
250	220	-.283	.063	-.073	-.568
250	221	-.288	.067	-.056	-.582
250	222	-.373	.085	-.150	-.728
250	223	-.457	.068	-.263	-.732
250	224	-.305	.056	-.136	-.522
250	225	-.430	.053	-.244	-.631
250	225	-.430	.053	-.244	-.631
250	226	-.296	.050	-.145	-.536
250	227	-.298	.051	-.132	-.533
250	228	-.293	.058	-.101	-.538
250	229	-.283	.064	-.047	-.620
250	230	-.574	.105	-.264	-1.026

WD	TAP	CPMEAN	CPRMS	CPMAX	CPMIN
250	232	-.488	.098	-.231	-.875
250	233	-.551	.100	-.188	-1.022
250	234	-.362	.099	.028	-.916
250	235	-.308	.075	-.046	-.652
250	236	-.321	.072	-.075	-.623
250	237	-.489	.102	-.182	-.914
250	239	-.328	.066	-.135	-.634
250	240	-.319	.063	-.128	-.593
250	241	-.388	.087	-.185	-.687
250	242	-.394	.081	-.189	-.793
250	243	-.491	.108	-.150	-.887
250	244	-.314	.072	.049	-.676
250	245	-.321	.073	-.066	-.760
250	249	-.589	.099	-.332	-.994
250	250	-.547	.100	-.286	-.996
250	252	-.479	.120	-.212	-1.015
250	253	-.594	.126	-.217	-1.225
250	254	-.350	.072	-.164	-.687
250	255	-.354	.068	-.164	-.704
250	256	-.472	.117	-.120	-1.077
250	257	-.591	.152	-.099	-1.345
250	258	-.560	.142	-.084	-1.579
250	259	-.292	.055	-.153	-.540
250	260	-.346	.062	-.162	-.646
250	261	-.338	.079	-.090	-.719
250	262	-.598	.126	-.295	-1.263
250	263	-.583	.124	-.260	-1.230
250	264	-.570	.116	-.179	-1.194
250	265	-.549	.120	-.069	-1.129
250	266	-.542	.126	-.140	-1.042
250	267	-.555	.132	-.069	-1.163
250	268	-.580	.127	-.064	-1.199
250	269	-.572	.126	-.148	-1.499
250	270	-.554	.107	-.260	-.970
250	271	-.543	.110	-.224	-1.025
250	272	-.506	.116	-.159	-1.105
250	273	-.512	.119	-.166	-1.085
250	280	-.490	.133	.041	-1.103
250	301	-.638	.126	-.248	-1.355
250	302	-.447	.091	-.186	-.904
250	303	-.470	.090	-.237	-.874
250	304	-.480	.084	-.255	-.965
250	305	-.466	.083	-.214	-.963
250	306	-.316	.076	-.038	-.610
250	307	-.303	.076	-.022	-.622
250	308	-.603	.140	-.142	-1.282
250	309	-.442	.082	-.194	-.811
250	310	-.440	.076	-.204	-.761
250	311	-.455	.099	-.158	-.987
250	312	-.576	.123	-.204	-1.323

WD	TAP	CPMEAN	CPRMS	CPMAX	CPMIN
250	313	-.588	.152	-.125	-1.311
250	314	-.676	.128	-.339	-1.426
250	315	-.714	.129	-.359	-1.307
250	316	-.744	.128	-.414	-1.373
250	317	-.305	.121	.065	-.925
250	318	-.567	.104	-.131	-.958
250	319	-.430	.073	-.208	-.725
250	320	-.405	.072	-.176	-.762
250	321	-.405	.075	-.187	-.760
250	322	-.389	.089	-.108	-.848
250	323	-.410	.115	-.043	-1.101
250	324	-.373	.064	-.180	-.616
250	325	-.375	.066	-.161	-.645
250	326	-.398	.068	-.183	-.739
250	327	-.565	.078	-.349	-1.133
250	328	-.414	.081	-.169	-.987
250	329	-.418	.086	-.130	-.981
250	330	-.425	.102	-.115	-1.128
250	331	-.385	.064	-.199	-.575
250	332	-.391	.067	-.176	-.604
250	333	-.393	.066	-.180	-.608
250	334	-.392	.062	-.169	-.599
250	335	-.394	.063	-.148	-.636
250	336	-.405	.071	-.164	-.751
250	337	-.404	.081	-.113	-.830
250	338	-.415	.098	-.162	-.911
250	339	-.418	.117	-.113	-1.117
250	340	-.466	.086	-.215	-1.053
250	341	-.462	.087	-.225	-1.057
250	342	-.463	.088	-.221	-1.076
250	343	-.465	.087	-.245	-1.052
250	344	-.499	.088	-.217	-.929
250	345	-.469	.092	-.136	-.902
250	346	-.431	.094	-.022	-.823
250	347	-.406	.103	.005	-.814
250	348	-.401	.120	-.013	-1.096
250	349	-.525	.119	-.243	-1.187
250	350	-.536	.125	-.252	-1.227
250	352	-.540	.115	-.034	-1.353
250	353	-.403	.140	.130	-.821
250	354	-.383	.111	-.085	-.672
250	355	-.375	.139	.098	-.853
250	359	-.339	.108	.015	-.830
250	360	-.370	.083	-.002	-.765
250	361	-.530	.163	-.022	-1.369
250	362	-.323	.108	.086	-.678
250	363	-.340	.117	.215	-.709
250	364	-.301	.142	.546	-.722
250	365	-.520	.108	-.222	-1.033
250	366	-.607	.115	-.320	-1.251

APPENDIX A -- PRESSURE DATA: BASS BROTHERS BUILDING - PHASE I, DALLAS, TEXAS -- CONFIGURATION A

WD	TAP	CPMEAN	CPRMS	CPMAX	CPMIN
250	367	-.380	.102	-.104	-.792
250	368	-.551	.113	-.234	-.999
250	369	-.388	.110	-.077	-.810
250	370	-.336	.101	.022	-.715
250	371	-.283	.110	.094	-.699
250	372	-.241	.130	.496	-.708
250	373	-.501	.110	-.124	-.940
250	374	-.377	.105	-.099	-.947
250	375	-.349	.105	-.053	-.763
250	376	-.764	.214	-.227	-1.762
250	377	-.740	.210	-.220	-1.693
250	378	-.737	.171	-.296	-1.462
250	379	-.604	.147	-.240	-1.275
250	380	-.439	.108	-.048	-.868
250	381	-.165	.120	.369	-.543
250	382	-.523	.135	-.075	-1.058
250	383	-.868	.243	-.135	-1.736
250	384	-.411	.105	-.136	-.944
250	385	-.652	.132	-.313	-1.230
250	386	-.448	.123	-.103	-1.207
250	387	-.731	.164	-.357	-1.589
250	388	-.613	.123	-.324	-1.222
250	389	-.322	.071	-.034	-.666
250	390	-.419	.076	-.215	-.774
250	391	-.444	.082	-.194	-.820
250	392	-.542	.118	-.245	-1.089
250	393	-.516	.103	-.236	-.974
250	401	.322	.227	.948	-.562
250	402	.266	.231	1.001	-.475
250	403	.120	.207	.769	-.570
250	404	.060	.141	.537	-.439
250	405	.150	.122	.552	-.347
250	406	.105	.128	.554	-.346
250	407	.074	.103	.474	-.270
250	408	.223	.180	.819	-.365
250	409	.257	.154	.769	-.306
250	410	.226	.146	.737	-.302
250	411	.411	.177	1.059	-.076
250	412	.281	.167	.846	-.253
250	413	.071	.173	.644	-.871
250	414	-.038	.176	.569	-.577
250	415	.147	.253	.837	-.735
250	416	.481	.161	1.013	.056
250	417	.463	.159	.995	.004
250	418	.460	.155	.950	-.020
250	419	.177	.201	.824	-.564
250	420	.198	.169	.848	-.400
250	421	.408	.177	1.032	-.084
250	422	.358	.170	.956	-.105
250	423	.092	.160	.660	-.578

WD	TAP	CPMEAN	CPRMS	CPMAX	CPMIN
250	424	.229	.152	.733	-.267
250	425	.421	.146	1.036	.030
250	426	.441	.139	1.055	.100
250	427	.453	.155	1.015	.072
250	428	.425	.147	.922	.072
250	429	.323	.155	.939	-.060
250	430	.310	.128	.824	-.004
250	431	.188	.111	.619	-.100
250	432	.011	.086	.336	-.260
250	433	.120	.146	.749	-.370
250	434	.337	.141	.898	-.094
250	435	.350	.132	.834	.033
250	436	.360	.129	.834	.053
250	437	.345	.126	.846	.039
250	438	.313	.120	.813	-.006
250	439	.134	.126	.650	-.173
250	440	.107	.104	.507	-.162
250	441	-.031	.093	.350	-.279
250	442	.075	.134	.653	-.344
250	443	-.096	.129	.380	-.513
250	444	-.173	.119	.318	-.699
250	445	.252	.114	.699	-.122
250	446	.208	.109	.663	-.165
250	447	-.012	.133	.475	-.527
250	449	.110	.127	.662	-.411
250	450	.204	.091	.582	-.013
250	451	.121	.105	.585	-.149
250	452	-.261	.138	.421	-.838
250	453	-.068	.115	.437	-.830
250	454	.007	.125	.516	-.553
250	455	.149	.126	.725	-.258
250	456	.222	.112	.689	-.035
250	457	.215	.087	.580	-.011
250	458	.151	.090	.512	-.176
250	459	.060	.077	.427	-.198
250	460	.053	.073	.449	-.299
250	461	-.230	.127	.274	-.768
250	462	.020	.130	.567	-.490
250	463	.161	.122	.748	-.229
250	464	.243	.132	.781	-.099
250	465	-.167	.094	.485	-.441
250	466	-.032	.101	.445	-.434
250	467	.050	.115	.514	-.412
250	468	.029	.124	.520	-.538
250	469	-.077	.086	.224	-.530
250	470	-.185	.095	.120	-.674
250	471	-.115	.074	.308	-.547
250	472	-.043	.100	.442	-.511
250	473	-.168	.077	.211	-.503
250	474	-.106	.051	.097	-.295

WD	TAP	CPMEAN	CPRMS	CPMAX	CPMIN
250	475	-.073	.051	.154	-.234
250	476	-.156	.066	.082	-.418
250	477	-.364	.158	.056	-1.010
250	478	-.495	.147	-.048	-1.079
250	479	.009	.095	.501	-.255
250	480	.154	.115	.648	-.125
250	481	.035	.125	.796	-.281
250	482	-.397	.159	.117	-.948
250	483	-.414	.097	-.118	-.767
250	484	-.119	.069	.157	-.422
250	702	.226	.094	.590	-.013
250	703	.242	.161	1.001	-.277
250	704	.111	.134	.659	-.300
250	801	-.644	.139	-.243	-1.491
250	802	-.553	.127	-.179	-1.139
250	803	-.405	.174	.171	-1.402
250	804	-.488	.132	.040	-.994
250	805	-.468	.130	-.021	-1.024
250	806	-.555	.134	-.056	-1.054
250	807	-.389	.076	.045	-.690
250	808	-.546	.126	-.201	-1.282
250	809	-.416	.108	.024	-.943
250	810	-.408	.105	.061	-.815
250	811	-.473	.091	-.221	-1.205
250	905	-.641	.199	-.066	-1.679
250	906	-.298	.091	.087	-.720
250	907	-.378	.064	-.113	-.672
250	908	-.234	.084	.133	-.521
250	909	.162	.108	.705	-.114
250	910	-.491	.096	-.191	-.891
250	911	-.176	.074	.140	-.510
250	912	-.306	.065	-.134	-.573
250	913	-.441	.083	-.240	-.821
250	915	-.697	.201	-.210	-1.563
260	101	-.321	.142	.021	-1.083
260	102	-.779	.195	-.065	-1.523
260	103	-.273	.076	.019	-.668
260	104	-.271	.079	.072	-.590
260	105	-.200	.079	.101	-.756
260	106	-.056	.099	.369	-.810
260	107	-.087	.188	.498	-.876
260	108	.163	.281	.872	-.889
260	109	-.075	.312	.670	-1.612
260	110	-.370	.102	-.064	-.804
260	111	-.024	.110	.499	-.670
260	112	.060	.091	.444	-.360
260	113	.211	.146	.738	-.500
260	114	.085	.124	.405	-.624
260	115	-.072	.123	.303	-.996
260	116	-.396	.138	-.001	-1.053

APPENDIX A -- PRESSURE DATA: BASS BROTHERS BUILDING - PHASE I, DALLAS, TEXAS -- CONFIGURATION A

WD	TAP	CPMEAN	CPRMS	CPMAX	CPMIN
260	117	-.007	.111	.432	-.446
260	118	.176	.143	.726	-.523
260	119	.222	.151	.784	-.380
260	120	.102	.134	.536	-.700
260	121	.018	.187	.514	-1.037
260	122	-.161	.248	.602	-1.040
260	123	-.204	.211	.590	-1.192
260	124	-.355	.117	.002	-.987
260	125	-.083	.093	.359	-.570
260	126	.066	.113	.670	-.409
260	127	.127	.122	.598	-.362
260	128	.019	.119	.402	-.704
260	129	-.165	.166	.331	-.890
260	130	-.192	.199	.542	-1.063
260	131	-.215	.178	.505	-1.064
260	133	-.192	.105	.227	-.829
260	134	-.040	.084	.425	-.383
260	135	.018	.080	.490	-.331
260	136	-.011	.062	.193	-.483
260	137	-.047	.083	.181	-.487
260	139	-.316	.156	.246	-1.083
260	140	-.477	.114	-.064	-.930
260	141	-.117	.073	.240	-.431
260	142	-.077	.076	.285	-.416
260	143	-.033	.057	.220	-.237
260	144	-.026	.051	.170	-.304
260	145	-.045	.069	.197	-.479
260	146	-.105	.131	.332	-1.031
260	147	-.294	.168	.263	-1.170
260	148	-.411	.076	-.150	-.714
260	149	-.351	.058	-.108	-.617
260	150	-.273	.041	-.115	-.449
260	151	-.171	.053	.068	-.396
260	152	-.045	.059	.199	-.383
260	153	-.101	.124	.311	-.700
260	154	-.068	.058	.137	-.402
260	155	-.122	.095	.181	-.708
260	156	-.398	.069	-.131	-.709
260	157	-.262	.042	-.109	-.484
260	158	-.170	.051	.037	-.323
260	159	-.158	.093	.193	-.661
260	160	-.046	.060	.175	-.392
260	161	-.219	.114	.177	-.785
260	162	-.474	.115	-.159	-1.079
260	163	-.483	.123	-.157	-1.168
260	164	-.122	.073	.181	-.484
260	165	-.079	.081	.219	-.509
260	166	-.342	.060	-.145	-.617
260	167	-.223	.042	.000	-.345
260	168	-.156	.079	.100	-.582
260	169	-.221	.099	.153	-.616
260	170	-.019	.092	.415	-.318
260	171	.078	.119	.551	-.316
260	201	-.517	.093	-.252	-.834
260	202	-.534	.111	-.168	-1.021
260	203	-.457	.098	-.192	-.948
260	204	-.372	.106	-.078	-.918
260	205	-.345	.076	-.103	-.633
260	206	-.302	.055	-.099	-.513
260	207	-.287	.058	-.082	-.500
260	208	-.494	.110	-.223	-1.171
260	209	-.443	.099	-.183	-1.043
260	210	-.408	.097	-.133	-1.005
260	211	-.366	.090	-.083	-.937
260	212	-.354	.070	-.114	-.761
260	213	-.331	.060	-.148	-.616
260	214	-.604	.142	-.300	-1.345
260	215	-.431	.132	-.164	-1.346
260	216	-.398	.115	-.181	-1.292
260	217	-.358	.089	-.085	-.799
260	218	-.337	.072	-.146	-.690
260	219	-.312	.057	-.119	-.565
260	220	-.291	.069	-.080	-.604
260	221	-.286	.077	-.046	-.658
260	222	-.314	.072	.107	-.601
260	223	-.436	.065	-.178	-.828
260	224	-.290	.052	-.061	-.505
260	225	-.416	.055	-.170	-.621
260	225	-.416	.055	-.170	-.621
260	226	-.285	.051	-.136	-.494
260	227	-.293	.056	-.121	-.527
260	228	-.281	.065	-.092	-.567
260	229	-.276	.074	-.039	-.586
260	230	-.577	.102	-.275	-1.034
260	232	-.476	.085	-.254	-.831
260	233	-.538	.093	-.091	-.924
260	234	-.325	.101	.084	-.839
260	235	-.278	.072	.043	-.530
260	236	-.330	.059	-.159	-.660
260	237	-.484	.090	-.154	-.859
260	239	-.329	.064	-.152	-.908
260	240	-.327	.067	-.136	-.630
260	241	-.424	.085	-.196	-.820
260	242	-.412	.081	-.208	-.782
260	243	-.497	.106	-.123	-.869
260	244	-.295	.074	.043	-.599
260	245	-.346	.064	-.156	-.720
260	249	-.600	.100	-.345	-1.072
260	250	-.540	.104	-.277	-1.063
260	252	-.492	.118	-.236	-1.007
260	253	-.590	.131	-.283	-1.356
260	254	-.367	.064	-.212	-.595
260	255	-.367	.062	-.077	-.638
260	256	-.438	.103	-.037	-.845
260	257	-.534	.143	-.123	-1.294
260	258	-.515	.130	-.124	-1.174
260	259	-.319	.052	-.175	-.519
260	260	-.364	.061	-.189	-.639
260	261	-.375	.075	-.194	-.767
260	262	-.573	.116	-.182	-1.095
260	263	-.563	.112	-.043	-1.227
260	264	-.556	.104	-.154	-1.025
260	265	-.533	.110	-.091	-1.183
260	266	-.492	.119	-.095	-.996
260	267	-.514	.129	.027	-1.007
260	268	-.535	.131	-.096	-1.230
260	269	-.545	.128	-.162	-1.571
260	270	-.605	.105	-.274	-1.067
260	271	-.535	.096	-.140	-.882
260	272	-.466	.114	-.064	-1.097
260	273	-.446	.112	-.162	-1.063
260	280	-.465	.123	.025	-1.075
260	301	-.696	.106	-.376	-1.144
260	302	-.515	.110	-.196	-1.098
260	303	-.538	.104	-.243	-.933
260	304	-.525	.096	-.252	-.865
260	305	-.499	.089	-.222	-.805
260	306	-.310	.076	-.059	-.861
260	307	-.310	.075	-.027	-.602
260	308	-.723	.138	-.301	-1.650
260	309	-.496	.089	-.247	-.816
260	310	-.514	.088	-.250	-.816
260	311	-.508	.095	-.256	-.939
260	312	-.678	.127	-.352	-1.359
260	313	-.748	.188	-.207	-1.847
260	314	-.850	.189	-.365	-1.634
260	315	-.855	.177	-.383	-1.604
260	316	-.768	.121	-.413	-1.304
260	317	-.389	.112	-.039	-.792
260	318	-.613	.098	-.309	-1.156
260	319	-.453	.076	-.225	-.713
260	320	-.461	.077	-.256	-.775
260	321	-.464	.081	-.240	-.769
260	322	-.464	.095	-.141	-.843
260	323	-.480	.103	-.178	-1.032
260	324	-.406	.065	-.198	-.628
260	325	-.410	.066	-.193	-.645
260	326	-.426	.068	-.239	-.694
260	327	-.611	.075	-.393	-.872
260	328	-.484	.092	-.244	-.855

APPENDIX A -- PRESSURE DATA: BASS BROTHERS BUILDING - PHASE I, DALLAS, TEXAS -- CONFIGURATION A

WD	TAP	CPMEAN	CPRMS	CPMAX	CPMIN
260	329	-.483	.096	-.224	-.857
260	330	-.483	.097	-.207	-.947
260	331	-.374	.060	-.095	-.613
260	332	-.376	.063	-.129	-.628
260	333	-.365	.063	-.146	-.612
260	334	-.385	.064	-.166	-.598
260	335	-.413	.067	-.189	-.686
260	336	-.415	.072	-.217	-.702
260	337	-.394	.079	-.072	-.697
260	338	-.403	.092	-.072	-.825
260	339	-.393	.114	.041	-.939
260	340	-.376	.068	-.168	-.696
260	341	-.378	.067	-.160	-.686
260	342	-.373	.069	-.106	-.700
260	343	-.379	.067	-.162	-.688
260	344	-.432	.074	-.246	-.830
260	345	-.433	.074	-.239	-.746
260	346	-.412	.078	-.184	-.760
260	347	-.410	.093	-.122	-.827
260	348	-.427	.118	.278	-1.278
260	349	-.427	.084	-.208	-.782
260	350	-.431	.085	-.219	-.799
260	352	-.466	.094	-.107	-.921
260	353	-.446	.091	-.022	-.898
260	354	-.425	.067	-.180	-.686
260	355	-.416	.087	-.047	-.817
260	359	-.361	.096	-.040	-.806
260	360	-.376	.080	-.115	-.784
260	361	-.476	.107	-.152	-1.176
260	362	-.405	.084	-.117	-.741
260	363	-.417	.084	-.142	-.758
260	364	-.419	.086	.072	-.821
260	365	-.572	.098	-.219	-.989
260	366	-.646	.117	-.345	-1.270
260	367	-.435	.087	-.145	-.800
260	368	-.626	.103	-.340	-1.043
260	369	-.467	.093	-.202	-.842
260	370	-.423	.082	-.200	-.765
260	371	-.396	.085	-.002	-.662
260	372	-.385	.087	.024	-.713
260	373	-.558	.100	-.157	-.978
260	374	-.460	.087	-.243	-.923
260	375	-.411	.082	-.208	-.820
260	376	-.887	.189	-.284	-1.599
260	377	-.739	.176	-.309	-1.547
260	378	-.828	.152	-.386	-1.443
260	379	-.673	.134	-.353	-1.293
260	380	-.519	.088	-.147	-.864
260	381	-.262	.100	.266	-.642
260	382	-.565	.130	-.190	-1.114
260	383	-.941	.210	-.342	-1.852
260	384	-.518	.104	-.235	-.941
260	385	-.671	.122	-.314	-1.168
260	386	-.533	.130	-.109	-1.246
260	387	-.738	.153	-.287	-1.380
260	388	-.626	.112	-.235	-1.078
260	389	-.408	.073	-.116	-.740
260	390	-.493	.091	-.272	-.892
260	391	-.498	.087	-.256	-.875
260	392	-.558	.103	-.250	-1.154
260	393	-.512	.090	-.202	-1.037
260	401	.414	.169	.941	-.311
260	402	.395	.200	.981	-.345
260	403	.175	.212	.807	-.465
260	404	.047	.133	.458	-.334
260	405	.067	.113	.509	-.288
260	406	-.004	.114	.437	-.401
260	407	-.025	.087	.443	-.311
260	408	.340	.188	1.016	-.228
260	409	.214	.156	.659	-.277
260	410	.224	.149	.688	-.218
260	411	.423	.184	1.014	-.094
260	412	.259	.165	.980	-.289
260	413	-.102	.203	.517	-1.106
260	414	-.253	.150	.296	-.748
260	415	-.215	.334	.771	-.867
260	416	.488	.155	1.045	.048
260	417	.444	.144	.969	.016
260	418	.448	.143	1.012	.021
260	419	-.024	.206	.628	-.572
260	420	.138	.203	.920	-.473
260	421	.384	.186	1.088	-.183
260	422	.282	.173	.953	-.263
260	423	-.129	.197	.474	-1.302
260	424	.351	.168	.912	-.271
260	425	.380	.150	.839	-.094
260	426	.389	.140	.838	-.131
260	427	.436	.152	1.118	.071
260	428	.391	.140	.989	.060
260	429	.262	.151	.827	-.106
260	430	.235	.115	.656	-.089
260	431	.097	.103	.496	-.229
260	432	-.068	.074	.212	-.319
260	433	.180	.130	.705	-.201
260	434	.267	.134	.783	-.120
260	435	.279	.134	.949	-.107
260	436	.301	.134	.909	-.025
260	437	.279	.128	.825	-.062
260	438	.239	.120	.819	-.054
260	439	.054	.117	.640	-.266
260	440	.036	.088	.421	-.297
260	441	-.079	.077	.304	-.348
260	442	-.017	.130	.644	-.418
260	443	-.178	.103	.302	-.577
260	444	-.244	.096	.133	-.588
260	445	.234	.112	.651	-.061
260	446	.156	.114	.644	-.197
260	447	-.162	.122	.329	-.803
260	449	.098	.119	.638	-.275
260	450	.178	.086	.533	-.046
260	451	.080	.102	.648	-.182
260	452	-.370	.117	.043	-.946
260	453	-.111	.138	.322	-.850
260	454	.115	.096	.545	-.184
260	455	.107	.120	.650	-.186
260	456	.198	.094	.712	-.127
260	457	.181	.079	.485	-.018
260	458	.101	.080	.430	-.184
260	459	.040	.091	.512	-.259
260	460	.019	.085	.367	-.331
260	461	-.322	.113	.071	-.837
260	462	.128	.094	.576	-.145
260	463	.193	.099	.604	-.124
260	464	.151	.129	.726	-.145
260	465	-.228	.064	.150	-.485
260	466	.076	.077	.496	-.179
260	467	.114	.091	.521	-.235
260	468	.106	.094	.582	-.288
260	469	-.067	.095	.410	-.519
260	470	-.187	.106	.150	-.751
260	471	-.165	.079	.077	-.607
260	472	-.012	.099	.612	-.372
260	473	-.079	.065	.243	-.320
260	474	-.072	.056	.193	-.257
260	475	-.086	.054	.178	-.259
260	476	-.200	.056	.050	-.417
260	477	-.453	.145	-.077	-1.418
260	478	-.573	.134	-.178	-1.118
260	479	.052	.104	.536	-.230
260	480	.074	.098	.543	-.148
260	481	-.127	.088	.274	-.372
260	482	-.627	.148	-.161	-1.152
260	483	-.495	.089	-.216	-.934
260	484	-.183	.066	.121	-.433
260	702	.176	.086	.585	-.071
260	703	.153	.168	.950	-.255
260	704	.019	.138	.607	-.581
260	801	-.860	.210	-.287	-1.747
260	802	-.521	.136	-.117	-1.133
260	803	-.354	.117	-.066	-.976

APPENDIX A -- PRESSURE DATA: BASS BROTHERS BUILDING - PHASE I, DALLAS, TEXAS -- CONFIGURATION A

WD	TAP	CPMEAN	CPRMS	CPMAX	CPMIN
260	804	-.542	.144	-.112	-1.209
260	805	-.452	.142	.114	-1.063
260	806	-.564	.117	-.168	-.945
260	807	-.394	.092	-.124	-.720
260	808	-.564	.121	-.195	-1.240
260	809	-.457	.137	.094	-1.038
260	810	-.387	.105	-.027	-.754
260	811	-.525	.105	-.220	-1.296
260	905	-.646	.203	-.079	-1.794
260	906	-.151	.076	.133	-.531
260	907	-.318	.060	-.118	-.636
260	908	-.114	.077	.277	-.426
260	909	.095	108	.604	-.159
260	910	-.504	.093	-.226	-.879
260	911	-.206	.058	.055	-.445
260	912	-.346	.061	-.184	-.603
260	913	-.514	.087	-.281	-.908
260	915	-.823	.210	-.281	-1.909
270	101	-.307	.111	.028	-.802
270	102	-.409	.277	.316	-1.511
270	103	-.262	.072	.045	-.542
270	104	-.260	.075	.043	-.573
270	105	-.178	.067	.122	-.536
270	106	-.028	.086	.271	-.303
270	107	.195	.158	.717	-.381
270	108	.387	.164	.846	-.285
270	109	.325	.184	.830	-.692
270	110	-.343	.116	-.003	-.934
270	111	-.009	.103	.375	-.338
270	112	.064	.071	.304	-.127
270	113	.284	.144	.789	-.134
270	114	.213	.100	.509	-.166
270	115	.117	.108	.478	-.410
270	116	-.396	.138	.014	-1.033
270	117	.056	.100	.398	-.307
270	118	.263	.133	.744	-.108
270	119	.299	.140	.870	-.142
270	120	.213	.116	.672	-.182
270	121	.208	.120	.669	-.302
270	122	.233	.192	.796	-.863
270	123	.235	.236	.899	-.658
270	124	-.326	.119	.058	-1.274
270	125	-.027	.092	.348	-.296
270	126	.127	.114	.558	-.175
270	127	.206	.124	.722	-.108
270	128	.148	.109	.622	-.335
270	129	.065	.127	.518	-.571
270	130	.155	.157	.771	-.486
270	131	.151	.185	.914	-.575
270	133	-.150	.110	.238	-.730

WD	TAP	CPMEAN	CPRMS	CPMAX	CPMIN
270	134	.002	.085	.364	-.353
270	135	.076	.082	.471	-.201
270	136	.064	.073	.395	-.164
270	137	.068	.078	.431	-.195
270	139	-.021	.157	.556	-.590
270	140	-.419	.132	-.013	-.991
270	141	-.075	.068	.302	-.336
270	142	-.047	.066	.298	-.340
270	143	.015	.060	.308	-.237
270	144	.032	.055	.257	-.194
270	145	.043	.064	.297	-.222
270	146	.058	.104	.476	-.403
270	147	-.024	.155	.561	-.702
270	148	-.338	.066	-.149	-.616
270	149	-.285	.061	-.080	-.521
270	150	-.213	.044	-.061	-.391
270	151	-.080	.064	.162	-.274
270	152	.038	.061	.338	-.197
270	153	.063	.105	.525	-.380
270	154	.005	.050	.206	-.207
270	155	.000	.082	.318	-.382
270	156	-.346	.055	-.144	-.591
270	157	-.210	.043	-.005	-.393
270	158	-.107	.062	.206	-.301
270	159	-.077	.069	.270	-.393
270	160	.014	.047	.196	-.203
270	161	-.102	.090	.252	-.650
270	162	-.472	.106	-.179	-1.040
270	163	-.483	.116	-.158	-1.351
270	164	-.057	.071	.424	-.435
270	165	-.038	.066	.417	-.358
270	166	-.303	.056	-.120	-.652
270	167	-.139	.055	.103	-.319
270	168	-.069	.084	.427	-.433
270	169	-.083	.111	.487	-.521
270	170	-.071	.082	.440	-.379
270	171	.010	.111	.736	-.459
270	201	-.437	.078	-.196	-.714
270	202	-.458	.088	-.177	-.909
270	203	-.399	.084	-.094	-.862
270	204	-.350	.088	-.069	-.801
270	205	-.340	.068	-.097	-.559
270	206	-.297	.062	-.053	-.583
270	207	-.279	.065	-.031	-.573
270	208	-.440	.089	-.178	-1.130
270	209	-.415	.079	-.197	-.904
270	210	-.390	.077	-.149	-.771
270	211	-.362	.071	-.139	-.652
270	212	-.353	.068	-.137	-.716
270	213	-.325	.063	-.120	-.711

WD	TAP	CPMEAN	CPRMS	CPMAX	CPMIN
270	214	-.604	.142	-.191	-1.407
270	215	-.437	.109	-.182	-1.160
270	216	-.414	.108	-.139	-1.213
270	217	-.339	.087	-.016	-.900
270	218	-.299	.068	-.071	-.622
270	219	-.294	.062	-.113	-.635
270	220	-.268	.071	-.030	-.660
270	221	-.259	.078	.003	-.795
270	222	-.279	.103	.131	-1.143
270	223	-.476	.121	-.129	-1.279
270	224	-.306	.087	-.066	-.879
270	225	-.399	.079	-.106	-.779
270	225	-.399	.079	-.106	-.779
270	226	-.268	.060	-.052	-.499
270	227	-.274	.061	-.080	-.510
270	228	-.252	.069	.009	-.512
270	229	-.241	.075	.021	-.516
270	230	-.486	.121	-.059	-1.129
270	232	-.439	.078	-.219	-.744
270	233	-.479	.092	-.186	-.922
270	234	-.318	.090	-.049	-.815
270	235	-.293	.075	.007	-.675
270	236	-.308	.069	-.137	-.642
270	237	-.447	.080	-.252	-.821
270	239	-.299	.073	-.087	-.743
270	240	-.301	.082	-.027	-.704
270	241	-.332	.093	-.053	-.742
270	242	-.331	.088	-.094	-.737
270	243	-.448	.092	-.109	-.861
270	244	-.302	.068	-.083	-.644
270	245	-.313	.067	-.144	-.635
270	249	-.518	.105	-.131	-.933
270	250	-.462	.089	-.214	-.867
270	252	-.372	.108	-.108	-.892
270	253	-.506	.122	-.207	-1.294
270	254	-.313	.070	-.119	-.606
270	255	-.317	.073	-.140	-.670
270	256	-.445	.081	-.158	-.842
270	257	-.475	.088	-.210	-.911
270	258	-.441	.101	-.096	-1.228
270	259	-.295	.062	-.139	-.600
270	260	-.318	.075	-.155	-.663
270	261	-.305	.080	-.051	-.700
270	262	-.502	.103	-.079	-.910
270	263	-.478	.106	-.122	-1.167
270	264	-.484	.088	-.262	-.873
270	265	-.464	.088	-.086	-.834
270	266	-.449	.081	-.155	-.882
270	267	-.460	.085	-.071	-.911
270	268	-.467	.093	-.179	-.937

APPENDIX A -- PRESSURE DATA: BASS BROTHERS BUILDING - PHASE I, DALLAS, TEXAS -- CONFIGURATION A

WD	TAP	CPMEAN	CPRMS	CPMAX	CPMIN
270	269	-.448	.094	-.120	-.847
270	270	-.553	.098	-.259	-.914
270	271	-.500	.092	-.226	-1.037
270	272	-.444	.087	-.096	-.784
270	273	-.426	.081	-.098	-.774
270	280	-.422	.082	-.158	-.753
270	301	-.586	.094	-.251	-1.027
270	302	-.393	.105	-.127	-.978
270	303	-.401	.091	-.132	-.899
270	304	-.406	.079	-.115	-.687
270	305	-.412	.073	-.150	-.669
270	306	-.299	.071	-.007	-.594
270	307	-.315	.070	.035	-.584
270	308	-.617	.099	-.345	-1.128
270	309	-.419	.076	-.163	-.714
270	310	-.434	.075	-.194	-.698
270	311	-.433	.075	-.245	-.859
270	312	-.572	.088	-.254	-.966
270	313	-.650	.185	-.189	-1.488
270	314	-.770	.203	-.330	-1.549
270	315	-.641	.128	-.360	-1.376
270	316	-.618	.091	-.372	-.936
270	317	-.334	.076	-.085	-.665
270	318	-.519	.078	-.238	-.802
270	319	-.391	.062	-.179	-.701
270	320	-.405	.061	-.217	-.680
270	321	-.402	.066	-.190	-.874
270	322	-.403	.070	-.178	-.729
270	323	-.407	.079	-.101	-.791
270	324	-.319	.061	-.102	-.597
270	325	-.333	.060	-.123	-.572
270	326	-.346	.063	-.139	-.628
270	327	-.519	.069	-.298	-.801
270	328	-.457	.103	-.224	-1.079
270	329	-.444	.107	-.132	-.979
270	330	-.438	.109	-.147	-.988
270	331	-.283	.062	-.039	-.546
270	332	-.285	.063	.007	-.548
270	333	-.269	.066	-.023	-.487
270	334	-.288	.063	-.044	-.566
270	335	-.320	.061	-.120	-.624
270	336	-.320	.070	-.007	-.609
270	337	-.301	.086	.153	-.679
270	338	-.308	.104	.258	-.677
270	339	-.307	.119	.277	-.743
270	340	-.249	.075	.145	-.543
270	341	-.255	.071	.065	-.534
270	342	-.239	.078	.070	-.521
270	343	-.251	.074	.017	-.518
270	344	-.288	.069	.072	-.524
270	345	-.299	.073	.206	-.536
270	346	-.276	.085	.180	-.655
270	347	-.258	.100	.226	-.793
270	348	-.270	.121	.466	-.810
270	349	-.274	.085	.026	-.585
270	350	-.277	.085	.012	-.600
270	352	-.292	.086	.126	-.682
270	353	-.330	.088	.116	-.921
270	354	-.316	.066	-.114	-.681
270	355	-.312	.085	.136	-.743
270	359	-.259	.093	-.020	-.697
270	360	-.371	.088	-.041	-.731
270	361	-.326	.121	.055	-1.004
270	362	-.342	.115	-.023	-1.091
270	363	-.350	.113	-.054	-1.145
270	364	-.350	.099	-.044	-.794
270	365	-.518	.121	-.026	-1.036
270	366	-.543	.139	-.052	-1.357
270	367	-.357	.109	.073	-.871
270	368	-.510	.121	-.168	-1.007
270	369	-.345	.103	-.016	-.980
270	370	-.320	.093	-.044	-.913
270	371	-.299	.095	.077	-.793
270	372	-.321	.092	.019	-.749
270	373	-.502	.118	-.060	-1.076
270	374	-.344	.099	-.007	-.782
270	375	-.313	.097	.095	-.684
270	376	-.708	.176	-.180	-1.449
270	377	-.589	.149	-.195	-1.342
270	378	-.643	.145	-.200	-1.273
270	379	-.551	.121	-.209	-1.108
270	380	-.451	.090	-.103	-.766
270	381	-.293	.086	.024	-.721
270	382	-.516	.113	-.053	-1.043
270	383	-.735	.165	-.141	-1.449
270	384	-.503	.096	-.173	-.870
270	385	-.562	.111	-.210	-1.091
270	386	-.508	.118	-.074	-.966
270	387	-.594	.131	-.221	-1.268
270	388	-.535	.105	-.226	-.972
270	389	-.396	.076	-.101	-.721
270	390	-.444	.075	-.210	-.752
270	391	-.451	.077	-.252	-.837
270	392	-.508	.099	-.275	-1.232
270	393	-.478	.094	-.224	-.937
270	401	.392	.161	.870	-.090
270	402	.321	.162	.974	-.141
270	403	.149	.176	.825	-.390
270	404	.056	.125	.430	-.355
270	405	.034	.103	.434	-.301
270	406	-.107	.103	.339	-.437
270	407	-.088	.078	.263	-.378
270	408	.352	.183	.899	-.255
270	409	.094	.133	.487	-.442
270	410	.139	.154	.675	-.318
270	411	.316	.199	.899	-.374
270	412	.168	.163	.774	-.438
270	413	-.309	.223	.440	-1.133
270	414	-.363	.112	.155	-.762
270	415	-.523	.142	.245	-.962
270	416	.406	.184	1.007	-.228
270	417	.400	.148	.949	-.064
270	418	.420	.154	1.005	-.058
270	419	-.168	.223	.514	-.986
270	420	.078	.213	.698	-.621
270	421	.301	.184	1.060	-.467
270	422	.139	.161	.760	-.528
270	423	-.402	.242	.392	-1.480
270	424	.340	.188	1.046	-.366
270	425	.214	.141	.800	-.302
270	426	.228	.144	.768	-.280
270	427	.297	.157	.835	-.122
270	428	.284	.129	.742	-.159
270	429	.141	.136	.790	-.219
270	430	.108	.099	.543	-.156
270	431	-.000	.090	.414	-.264
270	432	-.112	.068	.265	-.385
270	433	.170	.139	.810	-.430
270	434	.109	.097	.554	-.228
270	435	.117	.094	.523	-.358
270	436	.157	.112	.640	-.266
270	437	.163	.089	.528	-.097
270	438	.109	.077	.462	-.154
270	439	-.070	.093	.350	-.308
270	440	-.052	.065	.305	-.271
270	441	-.114	.063	.204	-.351
270	442	-.154	.117	.457	-.569
270	443	-.203	.096	.521	-.570
270	444	-.196	.087	.190	-.549
270	445	.155	.096	.681	-.144
270	446	.067	.093	.498	-.248
270	447	-.222	.124	.294	-1.002
270	449	-.004	.083	.412	-.339
270	450	.108	.082	.489	-.135
270	451	-.002	.086	.412	-.315
270	452	-.426	.128	.095	-.889
270	453	-.314	.170	.223	-.874
270	454	.112	.090	.480	-.415
270	455	-.012	.087	.381	-.391
270	456	.095	.077	.514	-.173

APPENDIX A -- PRESSURE DATA: BASS BROTHERS BUILDING - PHASE I, DALLAS, TEXAS -- CONFIGURATION A

WD	TAP	CPMEAN	CPRMS	CPMAX	CPMIN
270	457	.095	.073	.430	-.131
270	458	.052	.071	.420	-.145
270	459	.052	.105	.656	-.231
270	460	-.014	.089	.404	-.315
270	461	-.381	.125	.008	-.939
270	462	.118	.087	.573	-.276
270	463	.107	.086	.731	-.260
270	464	.031	.092	.430	-.166
270	465	-.220	.070	.363	-.485
270	466	.091	.080	.400	-.330
270	467	.088	.078	.487	-.146
270	468	.087	.078	.516	-.156
270	469	-.082	.080	.308	-.383
270	470	-.138	.081	.165	-.617
270	471	-.167	.075	.115	-.730
270	472	-.039	.079	.410	-.318
270	473	-.058	.064	.322	-.271
270	474	-.078	.052	.167	-.224
270	475	-.123	.048	.165	-.270
270	476	-.243	.061	.022	-.465
270	477	-.513	.158	-.058	-1.297
270	478	-.545	.116	-.225	-1.122
270	479	-.036	.086	.350	-.401
270	480	-.026	.084	.594	-.227
270	481	-.213	.093	.235	-.527
270	482	-.648	.150	-.046	-1.374
270	483	-.534	.111	-.155	-1.122
270	484	-.224	.071	.023	-.477
270	702	.088	.073	.438	-.220
270	703	.025	.121	.779	-.290
270	704	-.038	.134	.619	-.571
270	801	-.852	.181	-.285	-1.570
270	802	-.467	.143	-.064	-1.205
270	803	-.296	.077	-.057	-.686
270	804	-.435	.106	-.089	-.914
270	805	-.377	.110	.142	-.914
270	806	-.407	.107	.006	-.773
270	807	-.367	.094	-.012	-.712
270	808	-.448	.109	-.124	-1.175
270	809	-.367	.118	.080	-.758
270	810	-.341	.101	.272	-.807
270	811	-.439	.111	-.142	-1.426
270	905	-.633	.196	-.158	-1.827
270	906	-.067	.063	.170	-.422
270	907	-.283	.048	-.047	-.536
270	908	-.070	.068	.274	-.394
270	909	.002	.076	.527	-.200
270	910	-.462	.078	-.260	-.865
270	911	-.222	.049	-.052	-.403
270	912	-.277	.067	-.049	-.529

WD	TAP	CPMEAN	CPRMS	CPMAX	CPMIN
270	913	-.469	.076	-.196	-.749
270	915	-.744	.185	-.190	-1.659
280	101	-.296	.097	.028	-.772
280	102	.022	.209	.555	-1.138
280	103	-.281	.072	-.033	-.606
280	104	-.275	.078	.048	-.595
280	105	-.171	.071	.061	-.527
280	106	.004	.093	.318	-.357
280	107	.226	.142	.691	-.181
280	108	.429	.154	.945	-.041
280	109	.448	.162	.983	-.021
280	110	-.280	.146	.090	-.812
280	111	.020	.108	.473	-.325
280	112	.081	.084	.368	-.132
280	113	.335	.140	.858	-.103
280	114	.280	.118	.752	-.070
280	115	.257	.123	.688	-.329
280	116	-.461	.167	.028	-1.198
280	117	.076	.097	.467	-.322
280	118	.300	.127	.774	-.186
280	119	.375	.133	.861	-.012
280	120	.324	.118	.681	-.018
280	121	.348	.122	.718	.023
280	122	.426	.144	.894	.034
280	123	.424	.158	.985	-.184
280	124	-.429	.150	.004	-1.122
280	125	-.015	.088	.313	-.278
280	126	.179	.112	.622	-.139
280	127	.277	.123	.798	-.012
280	128	.223	.100	.590	-.029
280	129	.173	.116	.635	-.154
280	130	.289	.127	.795	-.038
280	131	.308	.140	.915	-.069
280	133	-.152	.127	.344	-.831
280	134	.043	.095	.543	-.274
280	135	.132	.097	.670	-.129
280	136	.104	.072	.438	-.085
280	137	.114	.076	.438	-.068
280	139	.104	.126	.733	-.452
280	140	-.500	.174	.097	-1.294
280	141	-.073	.072	.308	-.423
280	142	-.043	.067	.231	-.324
280	143	.034	.064	.353	-.151
280	144	.071	.058	.353	-.077
280	145	.093	.065	.396	-.073
280	146	.166	.098	.655	-.226
280	147	.099	.125	.766	-.475
280	148	-.374	.071	-.080	-.721
280	149	-.318	.065	-.033	-.766
280	150	-.228	.041	-.082	-.460

WD	TAP	CPMEAN	CPRMS	CPMAX	CPMIN
280	151	-.061	.062	.172	-.268
280	152	.080	.066	.450	-.138
280	153	.098	.099	.563	-.206
280	154	.017	.056	.245	-.230
280	155	.046	.064	.385	-.229
280	156	-.392	.055	-.158	-.637
280	157	-.196	.048	.017	-.370
280	158	-.044	.072	.206	-.236
280	159	-.054	.069	.335	-.275
280	160	.030	.049	.254	-.203
280	161	-.068	.070	.285	-.324
280	162	-.606	.124	-.231	-1.322
280	163	-.631	.151	-.224	-1.581
280	164	-.048	.099	.416	-.568
280	165	-.064	.088	.321	-.473
280	166	-.338	.074	-.078	-.716
280	167	-.120	.060	.164	-.291
280	168	.008	.096	.507	-.215
280	169	.014	.105	.563	-.326
280	170	-.082	.091	.323	-.422
280	171	.027	.122	.579	-.311
280	201	-.364	.070	-.164	-.638
280	202	-.393	.095	-.080	-.913
280	203	-.349	.071	-.115	-.707
280	204	-.317	.070	-.098	-1.030
280	205	-.320	.059	-.139	-.530
280	206	-.326	.056	-.142	-.567
280	207	-.305	.057	-.094	-.554
280	208	-.354	.067	-.103	-.677
280	209	-.355	.062	-.132	-.676
280	210	-.339	.059	-.136	-.577
280	211	-.321	.056	-.148	-.514
280	212	-.327	.054	-.167	-.505
280	213	-.314	.053	-.135	-.508
280	214	-.503	.083	-.232	-1.001
280	215	-.372	.064	-.207	-.657
280	216	-.357	.062	-.191	-.602
280	217	-.323	.059	-.107	-.551
280	218	-.309	.056	-.096	-.509
280	219	-.306	.053	-.141	-.484
280	220	-.286	.061	-.046	-.499
280	221	-.282	.064	-.064	-.535
280	222	-.352	.081	-.103	-.793
280	223	-.505	.079	-.259	-.987
280	224	-.359	.064	-.089	-.709
280	225	-.480	.063	-.250	-.810
280	225	-.480	.063	-.250	-.810
280	226	-.350	.063	-.168	-.628
280	227	-.350	.061	-.183	-.612
280	228	-.328	.064	-.141	-.573

APPENDIX A -- PRESSURE DATA: BASS BROTHERS BUILDING - PHASE I, DALLAS, TEXAS -- CONFIGURATION A

WD	TAP	CPMEAN	CPRMS	CPMAX	CPMIN
280	229	-.322	.068	-.112	-.592
280	230	-.518	.103	-.190	-1.185
280	232	-.516	.075	-.313	-1.177
280	233	-.563	.100	-.258	-1.294
280	234	-.388	.100	-.126	-.938
280	235	-.368	.080	-.136	-.880
280	236	-.382	.068	-.190	-.660
280	237	-.523	.075	-.309	-1.065
280	239	-.359	.070	-.177	-.820
280	240	-.366	.064	-.200	-.624
280	241	-.347	.068	-.161	-.711
280	242	-.335	.064	-.163	-.634
280	243	-.495	.073	-.261	-.929
280	244	-.395	.077	-.067	-.788
280	245	-.402	.076	-.200	-.789
280	249	-.538	.081	-.117	-.894
280	250	-.541	.085	-.316	-.941
280	252	-.371	.068	-.161	-.749
280	253	-.510	.078	-.111	-.919
280	254	-.344	.065	-.168	-.582
280	255	-.392	.079	-.168	-.799
280	256	-.504	.073	-.302	-.830
280	257	-.531	.076	-.312	-.891
280	258	-.513	.079	-.313	-.872
280	259	-.347	.065	-.181	-.663
280	260	-.400	.078	-.186	-.743
280	261	-.354	.068	-.132	-.690
280	262	-.599	.121	-.180	-1.277
280	263	-.529	.088	-.269	-.973
280	264	-.561	.101	-.358	-1.199
280	265	-.550	.093	-.351	-1.167
280	266	-.538	.084	-.353	-.999
280	267	-.544	.084	-.333	-.919
280	268	-.542	.085	-.289	-.892
280	269	-.511	.080	-.319	-.905
280	270	-.614	.093	-.385	-1.122
280	271	-.566	.090	-.311	-1.048
280	272	-.510	.076	-.325	-.863
280	273	-.553	.085	-.294	-.913
280	280	-.493	.069	-.307	-.832
280	301	-.493	.079	-.227	-.798
280	302	-.296	.064	-.059	-.638
280	303	-.298	.060	-.038	-.602
280	304	-.321	.066	-.089	-.619
280	305	-.339	.066	-.110	-.636
280	306	-.306	.061	-.095	-.657
280	307	-.307	.061	-.115	-.577
280	308	-.526	.084	-.251	-1.018
280	309	-.322	.064	-.088	-.578
280	310	-.354	.065	-.157	-.623
280	311	-.361	.062	-.158	-.658
280	312	-.487	.073	-.178	-.832
280	313	-.382	.113	-.083	-1.027
280	314	-.472	.090	-.225	-.917
280	315	-.461	.068	-.248	-.781
280	316	-.498	.070	-.239	-.799
280	317	-.308	.059	.010	-.553
280	318	-.439	.061	-.258	-.657
280	319	-.317	.053	-.157	-.510
280	320	-.326	.055	-.172	-.619
280	321	-.331	.058	-.169	-.565
280	322	-.333	.059	-.128	-.563
280	323	-.330	.067	-.046	-.709
280	324	-.297	.056	-.119	-.485
280	325	-.307	.056	-.114	-.485
280	326	-.312	.062	-.057	-.533
280	327	-.451	.061	-.268	-.680
280	328	-.392	.086	-.194	-.886
280	329	-.386	.090	-.112	-.869
280	330	-.384	.093	-.093	-.966
280	331	-.258	.049	-.106	-.440
280	332	-.261	.051	-.054	-.453
280	333	-.264	.050	-.077	-.422
280	334	-.271	.051	-.097	-.468
280	335	-.284	.050	-.117	-.478
280	336	-.297	.055	-.064	-.507
280	337	-.300	.062	.102	-.610
280	338	-.291	.066	.019	-.575
280	339	-.287	.074	.136	-.645
280	340	-.267	.059	-.062	-.482
280	341	-.271	.057	-.065	-.487
280	342	-.272	.058	-.048	-.475
280	343	-.279	.056	-.079	-.481
280	344	-.290	.057	-.069	-.542
280	345	-.303	.063	-.067	-.588
280	346	-.301	.067	.012	-.555
280	347	-.302	.073	-.006	-.600
280	348	-.307	.073	.019	-.784
280	349	-.285	.056	-.063	-.485
280	350	-.288	.055	-.066	-.494
280	352	-.295	.060	-.092	-.596
280	353	-.339	.076	-.134	-.872
280	354	-.337	.076	-.103	-1.013
280	355	-.342	.077	-.060	-.987
280	359	-.314	.069	-.139	-.614
280	360	-.445	.075	-.223	-.759
280	361	-.313	.067	-.098	-.721
280	362	-.327	.071	-.117	-.753
280	363	-.329	.074	-.104	-.737
280	364	-.341	.074	-.118	-.718
280	365	-.522	.086	-.208	-.997
280	366	-.546	.092	-.229	-1.018
280	367	-.357	.074	-.071	-.833
280	368	-.488	.080	-.220	-.792
280	369	-.345	.069	-.137	-.638
280	370	-.327	.062	-.120	-.573
280	371	-.311	.060	-.058	-.549
280	372	-.332	.059	-.098	-.554
280	373	-.501	.091	-.201	-.914
280	374	-.352	.068	-.150	-.697
280	375	-.322	.060	-.089	-.517
280	376	-.661	.121	-.328	-1.171
280	377	-.685	.130	-.297	-1.218
280	378	-.658	.123	-.322	-1.351
280	379	-.620	.105	-.324	-1.022
280	380	-.502	.073	-.303	-.913
280	381	-.333	.066	-.148	-.676
280	382	-.537	.081	-.251	-.948
280	383	-.839	.173	-.443	-1.576
280	384	-.556	.085	-.341	-1.090
280	385	-.573	.087	-.344	-1.058
280	386	-.695	.144	-.294	-1.406
280	387	-.598	.102	-.342	-1.121
280	388	-.570	.087	-.343	-1.000
280	389	-.478	.072	-.265	-.780
280	390	-.534	.072	-.331	-.861
280	391	-.532	.075	-.318	-.822
280	392	-.602	.107	-.341	-1.141
280	393	-.566	.095	-.346	-1.008
280	401	.360	.155	.849	-.195
280	402	.221	.136	.674	-.265
280	403	-.000	.155	.551	-.417
280	404	.069	.129	.535	-.339
280	405	-.028	.082	.303	-.295
280	406	-.164	.077	.197	-.448
280	407	-.125	.060	.102	-.329
280	408	.158	.213	.788	-.734
280	409	-.002	.122	.389	-.476
280	410	-.009	.122	.396	-.401
280	411	.072	.177	.785	-.341
280	412	.107	.134	.695	-.288
280	413	-.566	.205	.068	-1.283
280	414	-.369	.078	-.129	-.667
280	415	-.472	.089	-.083	-.868
280	416	.148	.154	.818	-.275
280	417	.355	.138	.885	-.091
280	418	.372	.136	.874	-.034
280	419	-.361	.085	.078	-.675
280	420	-.266	.114	.258	-.719
280	421	.294	.155	.794	-.218

APPENDIX A -- PRESSURE DATA: BASS BROTHERS BUILDING - PHASE I, DALLAS, TEXAS -- CONFIGURATION A

WD	TAP	CPMEAN	CPRMS	CPMAX	CPMIN
280	422	.088	.117	.659	-.266
280	423	-.539	.194	.062	-1.248
280	424	.257	.225	.926	-.772
280	425	.163	.119	.627	-.526
280	426	.156	.118	.674	-.358
280	427	.149	.139	.741	-.405
280	428	.281	.125	.692	-.294
280	429	.087	.100	.483	-.208
280	430	.052	.070	.444	-.168
280	431	-.054	.052	.214	-.210
280	432	-.143	.042	.054	-.296
280	433	.160	.190	.829	-.553
280	434	.087	.094	.477	-.281
280	435	.082	.099	.416	-.303
280	436	.095	.120	.549	-.242
280	437	.185	.108	.584	-.176
280	438	.101	.077	.371	-.119
280	439	-.126	.063	.151	-.342
280	440	-.095	.047	.126	-.252
280	441	-.157	.047	.059	-.323
280	442	-.244	.084	.092	-.582
280	443	-.275	.076	.085	-.591
280	444	-.278	.068	.007	-.526
280	445	.197	.113	.731	-.091
280	446	.074	.090	.570	-.197
280	447	-.322	.092	-.029	-.863
280	449	-.034	.087	.355	-.499
280	450	.029	.096	.453	-.396
280	451	-.080	.112	.449	-.417
280	452	-.510	.116	-.070	-1.105
280	453	-.501	.113	-.030	-.855
280	454	.062	.156	.691	-.627
280	455	-.058	.083	.263	-.512
280	456	.039	.083	.377	-.307
280	457	.026	.079	.385	-.331
280	458	.009	.071	.309	-.210
280	459	.084	.134	.760	-.281
280	460	-.050	.069	.308	-.342
280	461	-.458	.119	-.045	-.963
280	462	.047	.136	.590	-.626
280	463	.034	.085	.332	-.273
280	464	-.012	.086	.400	-.288
280	465	-.260	.056	.026	-.431
280	466	.016	.131	.545	-.548
280	467	.012	.083	.406	-.591
280	468	.036	.078	.430	-.269
280	469	-.132	.067	.165	-.358
280	470	-.191	.068	.039	-.515
280	471	-.230	.063	-.002	-.534
280	472	-.063	.110	.549	-.533

WD	TAP	CPMEAN	CPRMS	CPMAX	CPMIN
280	473	-.067	.075	.318	-.315
280	474	-.118	.056	.131	-.380
280	475	-.189	.049	.009	-.358
280	476	-.323	.064	-.076	-.638
280	477	-.688	.198	-.225	-1.759
280	478	-.624	.116	-.314	-1.096
280	479	-.142	.124	.311	-.594
280	480	-.135	.066	.211	-.299
280	481	-.363	.079	-.012	-.630
280	482	-.898	.181	-.458	-1.616
280	483	-.687	.119	-.359	-1.185
280	484	-.347	.064	-.089	-.622
280	702	.046	.086	.406	-.230
280	703	-.013	.083	.598	-.327
280	704	-.090	.105	.403	-.538
280	801	-.711	.147	-.289	-1.415
280	802	-.457	.131	-.012	-1.037
280	803	-.301	.071	-.069	-.578
280	804	-.361	.075	-.110	-.698
280	805	-.367	.081	-.048	-.775
280	806	-.246	.117	.209	-.656
280	807	-.331	.077	-.059	-.620
280	808	-.352	.097	-.064	-.831
280	809	-.334	.087	.038	-.728
280	810	-.320	.089	.004	-.691
280	811	-.342	.091	-.080	-1.047
280	905	-.754	.194	-.188	-1.850
280	906	-.058	.059	.173	-.315
280	907	-.328	.058	-.126	-.690
280	908	-.086	.090	.294	-.552
280	909	-.022	.078	.307	-.244
280	910	-.542	.085	-.310	-1.092
280	911	-.273	.048	-.086	-.509
280	912	-.336	.060	-.073	-.598
280	913	-.545	.076	-.339	-.830
280	915	-.796	.153	-.368	-1.480
290	101	-.277	.123	.161	-.812
290	102	.215	.145	.622	-.520
290	103	-.312	.077	.007	-.605
290	104	-.297	.086	.089	-.612
290	105	-.158	.082	.229	-.438
290	106	.018	.099	.408	-.319
290	107	.165	.131	.617	-.211
290	108	.407	.154	.942	-.029
290	109	.429	.161	1.014	-.025
290	110	-.171	.117	.182	-.994
290	111	.072	.128	.593	-.362
290	112	.100	.086	.351	-.122
290	113	.375	.137	.899	-.021
290	114	.330	.129	.743	-.047

WD	TAP	CPMEAN	CPRMS	CPMAX	CPMIN
290	115	.392	.136	.869	.037
290	116	-.426	.222	.185	-1.208
290	117	.118	.105	.540	-.178
290	118	.329	.125	.805	-.021
290	119	.415	.153	.944	.021
290	120	.384	.146	.837	-.011
290	121	.421	.154	.897	-.012
290	122	.475	.169	1.007	-.007
290	123	.452	.164	1.019	.025
290	124	-.374	.190	.165	-1.048
290	125	.039	.104	.496	-.248
290	126	.224	.123	.764	-.072
290	127	.318	.134	.923	-.047
290	128	.285	.116	.675	.009
290	129	.235	.138	.721	-.148
290	130	.351	.139	.800	.009
290	131	.338	.140	.840	-.051
290	133	-.141	.140	.296	-.927
290	134	.055	.102	.457	-.345
290	135	.147	.097	.490	-.156
290	136	.141	.090	.512	-.104
290	137	.153	.097	.559	-.065
290	139	.061	.107	.537	-.268
290	140	-.430	.165	.085	-1.038
290	141	-.042	.080	.238	-.401
290	142	-.031	.074	.250	-.331
290	143	.044	.070	.369	-.213
290	144	.100	.070	.412	-.088
290	145	.133	.079	.579	-.108
290	146	.213	.107	.634	-.034
290	147	.071	.106	.565	-.225
290	148	-.344	.092	.139	-.889
290	149	-.295	.093	.106	-.908
290	150	-.199	.050	-.033	-.446
290	151	-.026	.066	.323	-.223
290	152	.102	.070	.364	-.128
290	153	.058	.107	.525	-.390
290	154	.037	.060	.257	-.206
290	155	.083	.073	.547	-.218
290	156	-.365	.068	-.033	-.721
290	157	-.135	.061	.106	-.306
290	158	.049	.093	.406	-.263
290	159	-.034	.070	.300	-.276
290	160	.036	.050	.222	-.229
290	161	-.057	.084	.338	-.348
290	162	-.596	.143	-.212	-1.228
290	163	-.646	.201	-.145	-1.608
290	164	-.076	.126	.632	-.624
290	165	-.116	.100	.422	-.612
290	166	-.310	.082	-.035	-.717

APPENDIX A -- PRESSURE DATA: BASS BROTHERS BUILDING - PHASE I, DALLAS, TEXAS -- CONFIGURATION A

WD	TAP	CPMEAN	CPRMS	CPMAX	CPMIN
290	167	-.070	.074	.276	-.275
290	168	.095	.115	.542	-.167
290	169	.090	.135	.692	-.311
290	170	-.043	.096	.388	-.341
290	171	.055	.124	.625	-.311
290	201	-.369	.081	-.081	-1.135
290	202	-.437	.112	-.134	-1.077
290	203	-.371	.070	-.117	-.751
290	204	-.365	.057	-.185	-.608
290	205	-.369	.055	-.187	-.545
290	206	-.342	.057	-.151	-.559
290	207	-.325	.058	-.125	-.556
290	208	-.389	.061	-.211	-.796
290	209	-.390	.055	-.214	-.651
290	210	-.375	.054	-.208	-.614
290	211	-.362	.051	-.213	-.579
290	212	-.375	.055	-.209	-.625
290	213	-.360	.055	-.195	-.617
290	214	-.518	.082	-.231	-.951
290	215	-.398	.069	-.205	-.803
290	216	-.390	.064	-.185	-.751
290	217	-.357	.060	-.127	-.583
290	218	-.352	.058	-.123	-.597
290	219	-.338	.058	-.179	-.625
290	220	-.318	.061	-.119	-.618
290	221	-.310	.063	-.120	-.623
290	222	-.362	.099	-.053	-.907
290	223	-.508	.084	-.292	-.903
290	224	-.364	.073	-.126	-.840
290	225	-.490	.068	-.283	-.904
290	225	-.490	.068	-.283	-.904
290	226	-.331	.058	-.164	-.628
290	227	-.334	.062	-.158	-.599
290	228	-.305	.064	-.099	-.625
290	229	-.296	.068	-.063	-.644
290	230	-.503	.130	-.061	-1.430
290	232	-.455	.078	-.209	-.755
290	233	-.566	.128	-.244	-1.352
290	234	-.372	.103	.051	-1.034
290	235	-.350	.085	.044	-.722
290	236	-.369	.074	-.145	-.792
290	237	-.470	.080	-.249	-.835
290	239	-.338	.073	-.060	-.667
290	240	-.341	.068	-.138	-.681
290	241	-.300	.067	.026	-.559
290	242	-.287	.061	-.023	-.608
290	243	-.467	.082	-.219	-.915
290	244	-.355	.079	-.077	-.704
290	245	-.372	.073	-.154	-.670
290	249	-.503	.084	-.186	-.857

WD	TAP	CPMEAN	CPRMS	CPMAX	CPMIN
290	250	-.482	.086	-.222	-.864
290	252	-.307	.058	-.090	-.511
290	253	-.447	.093	-.036	-.854
290	254	-.312	.062	-.068	-.586
290	255	-.358	.081	-.122	-.882
290	256	-.473	.085	-.208	-.911
290	257	-.505	.092	-.245	-1.045
290	258	-.486	.091	-.124	-1.023
290	259	-.335	.065	-.152	-.602
290	260	-.359	.078	-.102	-.799
290	261	-.292	.061	.003	-.533
290	262	-.576	.147	-.127	-1.600
290	263	-.494	.107	-.131	-1.167
290	264	-.530	.102	-.240	-1.011
290	265	-.536	.097	-.296	-.964
290	266	-.494	.084	-.263	-.861
290	267	-.493	.086	-.243	-.862
290	268	-.485	.092	-.195	-1.115
290	269	-.477	.089	-.170	-.875
290	270	-.537	.088	-.250	-.892
290	271	-.520	.102	-.243	-1.478
290	272	-.490	.086	-.268	-.908
290	273	-.512	.095	-.194	-.951
290	280	-.460	.078	-.239	-.779
290	301	-.507	.075	-.211	-.801
290	302	-.285	.062	-.074	-.577
290	303	-.283	.058	-.065	-.497
290	304	-.303	.063	-.064	-.534
290	305	-.321	.065	-.088	-.544
290	306	-.361	.063	-.127	-.603
290	307	-.363	.062	-.176	-.608
290	308	-.532	.080	-.260	-1.013
290	309	-.332	.063	-.101	-.572
290	310	-.344	.064	-.138	-.568
290	311	-.351	.063	-.129	-.590
290	312	-.501	.071	-.283	-.836
290	313	-.344	.092	-.084	-.903
290	314	-.429	.072	-.217	-.744
290	315	-.444	.065	-.239	-.671
290	316	-.503	.073	-.275	-.781
290	317	-.311	.061	-.116	-.503
290	318	-.459	.062	-.234	-.698
290	319	-.312	.055	-.134	-.512
290	320	.327	.057	-.144	-.527
290	321	-.332	.059	-.146	-.559
290	322	-.362	.059	-.155	-.551
290	323	-.367	.060	-.167	-.599
290	324	-.312	.056	-.115	-.580
290	325	-.319	.054	-.147	-.527
290	326	-.336	.058	-.172	-.546

WD	TAP	CPMEAN	CPRMS	CPMAX	CPMIN
290	327	-.472	.062	-.264	-.745
290	328	-.393	.077	-.164	-.793
290	329	-.403	.077	-.148	-.731
290	330	-.407	.077	-.166	-.781
290	331	-.278	.059	-.025	-.620
290	332	-.278	.058	-.011	-.583
290	333	-.282	.055	-.116	-.476
290	334	-.284	.059	-.093	-.510
290	335	-.297	.058	-.092	-.502
290	336	-.310	.062	-.094	-.526
290	337	-.325	.066	-.089	-.590
290	338	-.329	.062	-.054	-.548
290	339	-.332	.070	-.015	-.815
290	340	-.233	.053	-.014	-.450
290	341	-.234	.053	.032	-.443
290	342	-.231	.052	-.037	-.429
290	343	-.238	.050	-.016	-.437
290	344	-.264	.047	-.110	-.440
290	345	-.274	.051	-.104	-.477
290	346	-.272	.056	-.023	-.488
290	347	-.275	.064	.010	-.636
290	348	-.277	.080	.159	-.642
290	349	-.247	.060	-.045	-.583
290	350	-.244	.058	-.021	-.457
290	352	-.254	.062	-.030	-.448
290	353	-.281	.068	-.015	-.677
290	354	-.276	.069	.036	-.672
290	355	-.281	.070	.080	-.645
290	359	-.281	.071	-.054	-.540
290	360	-.424	.077	-.170	-.771
290	361	-.281	.065	-.059	-.529
290	362	-.305	.071	-.112	-.632
290	363	-.303	.074	-.088	-.774
290	364	-.303	.071	-.074	-.678
290	365	-.461	.087	-.109	-.835
290	366	-.478	.099	-.134	-.926
290	367	-.311	.075	-.029	-.670
290	368	-.470	.086	-.196	-.865
290	369	-.305	.072	-.081	-.635
290	370	-.280	.064	-.067	-.504
290	371	-.267	.063	-.106	-.606
290	372	-.290	.065	-.095	-.597
290	373	-.456	.093	-.190	-.976
290	374	-.304	.074	-.048	-.600
290	375	-.281	.071	-.009	-.608
290	376	-.591	.120	-.275	-1.288
290	377	-.575	.110	-.184	-1.011
290	378	-.623	.125	-.307	-1.208
290	379	-.503	.088	-.238	-.883
290	380	-.438	.077	-.214	-.707

APPENDIX A -- PRESSURE DATA: BASS BROTHERS BUILDING - PHASE I, DALLAS, TEXAS - CONFIGURATION A

WD	TAP	CPMEAN	CPRMS	CPMAX	CPMIN
290	381	-.296	.061	-.067	-.558
290	382	-.477	.084	-.163	-.867
290	383	-.679	.151	-.198	-1.199
290	384	-.465	.082	-.164	-.763
290	385	-.469	.074	-.115	-.783
290	386	-.587	.135	-.179	-1.142
290	387	-.473	.080	-.151	-.825
290	388	-.471	.075	-.159	-.780
290	389	-.424	.076	-.145	-.731
290	390	-.458	.072	-.231	-.739
290	391	-.457	.077	-.186	-.843
290	392	-.555	.127	-.183	-1.203
290	393	-.502	.104	-.119	-.956
290	401	.222	.151	.773	-.457
290	402	.057	.118	.448	-.314
290	403	-.216	.186	.553	-.994
290	404	.018	.148	.456	-.684
290	405	-.058	.080	.210	-.440
290	406	-.216	.066	.128	-.468
290	407	-.174	.052	.011	-.438
290	408	-.229	.266	.483	-1.231
290	409	-.183	.156	.280	-.870
290	410	-.188	.162	.207	-1.304
290	411	-.157	.147	.473	-.719
290	412	.074	.158	.736	-.507
290	413	-.598	.208	.106	-1.339
290	414	-.417	.081	-.152	-.738
290	415	-.527	.079	-.246	-.809
290	416	-.054	.148	.643	-.771
290	417	.240	.214	.837	-.546
290	418	.338	.168	.256	-.273
290	419	-.388	.081	-.062	-.711
290	420	-.355	.079	-.004	-.671
290	421	.226	.197	.913	-.745
290	422	.055	.138	.736	-.849
290	423	-.546	.204	.093	-1.323
290	424	-.120	.252	.622	-1.025
290	425	-.029	.156	.364	-.776
290	426	-.031	.156	.417	-.824
290	427	-.049	.150	.509	-.762
290	428	.144	.187	.770	-.690
290	429	.027	.124	.426	-.636
290	430	.001	.073	.407	-.403
290	431	-.099	.051	.128	-.414
290	432	-.178	.046	-.013	-.396
290	433	-.106	.252	.713	-1.128
290	434	-.047	.126	.373	-.904
290	435	-.058	.136	.353	-.867
290	436	-.053	.134	.474	-.707
290	437	.116	.150	.619	-.542

WD	TAP	CPMEAN	CPRMS	CPMAX	CPMIN
290	438	.071	.087	.451	-.331
290	439	-.141	.067	.134	-.484
290	440	-.108	.046	.099	-.321
290	441	-.157	.044	.051	-.322
290	442	-.254	.088	.106	-.724
290	443	-.270	.076	.027	-.544
290	444	-.250	.071	.037	-.524
290	445	.164	.124	.627	-.325
290	446	.056	.100	.475	-.383
290	447	-.332	.092	.062	-.817
290	449	-.164	.113	.182	-.732
290	450	-.050	.110	.507	-.706
290	451	-.174	.112	.328	-.796
290	452	-.493	.115	-.170	-1.103
290	453	-.494	.109	-.134	-.961
290	454	-.106	.194	.655	-1.065
290	455	-.179	.120	.242	-1.172
290	456	-.055	.104	.275	-.624
290	457	-.046	.099	.412	-.717
290	458	-.047	.076	.314	-.336
290	459	.061	.140	.707	-.401
290	460	-.047	.082	.334	-.336
290	461	-.449	.110	-.107	-1.042
290	462	-.100	.166	.692	-.742
290	463	-.063	.107	.298	-1.148
290	464	-.123	.101	.345	.574
290	465	-.249	.066	.113	-.501
290	466	-.113	.161	.428	.696
290	467	-.064	.111	.359	-.740
290	468	-.006	.086	.489	-.390
290	469	-.163	.065	.219	-.393
290	470	-.203	.068	.048	-.513
290	471	-.259	.067	-.018	-.623
290	472	-.111	.105	.450	-.662
290	473	-.125	.094	.266	-.709
290	474	-.129	.053	.183	-.453
290	475	-.199	.048	.113	-.360
290	476	-.324	.057	-.151	.589
290	477	-.574	.148	-.224	-1.191
290	478	-.523	.102	-.222	-.911
290	479	-.219	.136	.281	-.842
290	480	-.182	.059	.222	-.330
290	481	-.360	.029	.041	-.590
290	482	-.708	.158	-.217	-1.364
290	483	-.611	.120	-.243	-1.162
290	484	-.370	.066	-.130	-.600
290	702	-.018	.091	.399	-.342
290	703	-.031	.095	.536	-.473
290	704	-.113	.120	.395	-.587
290	801	-.797	.163	-.337	-1.425

WD	TAP	CPMEAN	CPRMS	CPMAX	CPMIN
290	802	-.544	.144	-.134	-1.131
290	803	-.334	.076	-.103	-.626
290	804	-.402	.084	-.122	-.767
290	805	-.396	.069	-.200	-.673
290	806	-.083	.163	.510	-.563
290	807	-.365	.089	-.007	-.905
290	808	-.327	.096	.010	-.777
290	809	-.391	.077	.011	-.796
290	810	-.347	.096	.060	-.749
290	811	-.309	.091	.004	-.875
290	905	-.688	.180	-.285	-2.015
290	906	-.106	.077	.173	-.441
290	907	-.291	.071	.170	-.565
290	908	-.107	.095	.238	-.592
290	909	-.121	.080	.233	-.427
290	910	-.498	.092	-.226	-.973
290	911	-.266	.045	-.090	-.462
290	912	-.284	.057	.018	-.489
290	913	-.470	.085	-.198	-.850
290	915	-.664	.151	-.240	-1.549
300	101	-.094	.139	.288	-.733
300	102	.275	.142	.750	-.241
300	103	-.261	.087	.136	-.611
300	104	-.242	.101	.156	-.600
300	105	-.119	.097	.353	-.494
300	106	.047	.102	.404	-.324
300	107	.165	.118	.564	-.236
300	108	.337	.151	.897	-.158
300	109	.327	.153	.897	-.181
300	110	-.070	.091	.302	-.676
300	111	.141	.134	.759	-.324
300	112	.130	.090	.486	-.134
300	113	.405	.151	.917	-.006
300	114	.390	.146	.841	-.045
300	115	.445	.150	.948	.040
300	116	.213	.191	.241	-1.088
300	117	.221	.134	.770	-.195
300	118	.379	.143	.950	-.053
300	119	.420	.147	.968	-.003
300	120	.403	.145	.946	.040
300	121	.435	.150	.978	.050
300	122	.438	.159	.968	-.040
300	123	.366	.156	.972	-.067
300	124	.218	.170	.248	-1.029
300	125	.115	.130	.727	-.287
300	126	.250	.130	.812	-.136
300	127	.320	.129	.758	-.004
300	128	.302	.132	.855	.006
300	129	.265	.155	.775	-.083
300	130	.293	.141	.873	-.099

APPENDIX A -- PRESSURE DATA: BASS BROTHERS BUILDING - PHASE I, DALLAS, TEXAS -- CONFIGURATION A

WD	TAP	CPMEAN	CPRMS	CPMAX	CPMIN
300	131	.231	.138	.792	-.147
300	133	-.100	.166	.557	-.905
300	134	.058	.121	.545	-.461
300	135	.134	.102	.607	-.196
300	136	.139	.088	.569	-.076
300	137	.159	.090	.659	-.079
300	139	.031	.101	.444	-.288
300	140	-.327	.167	.112	-1.110
300	141	-.049	.088	.346	-.468
300	142	-.041	.089	.322	-.534
300	143	.041	.077	.402	-.215
300	144	.112	.075	.507	-.077
300	145	.146	.081	.600	-.045
300	146	.221	.103	.716	-.083
300	147	.048	.098	.515	-.263
300	148	-.276	.114	.152	-.822
300	149	-.228	.118	.284	-.892
300	150	-.159	.060	.050	-.551
300	151	.014	.076	.377	-.195
300	152	.110	.066	.520	-.079
300	153	.008	.146	.668	-.565
300	154	.047	.065	.304	-.246
300	155	.055	.069	.429	-.397
300	156	-.307	.069	-.014	-.568
300	157	-.105	.071	.237	-.336
300	158	.076	.105	.467	-.182
300	159	-.050	.058	.211	-.252
300	160	.017	.055	.265	-.223
300	161	-.066	.070	.279	-.398
300	162	-.621	.137	-.241	-1.298
300	163	-.733	.219	-.216	-1.781
300	164	-.170	.166	.455	-1.068
300	165	-.176	.128	.306	-.834
300	166	-.295	.087	-.001	-.720
300	167	-.030	.081	.299	-.234
300	168	.130	.102	.573	-.151
300	169	.123	.104	.604	-.371
300	170	-.036	.083	.340	-.358
300	171	.038	.109	.577	-.285
300	201	-.382	.129	-.072	-1.125
300	202	-.414	.091	-.132	-.865
300	203	-.391	.072	-.123	-.742
300	204	-.357	.059	-.118	-.608
300	205	-.352	.057	-.149	-.639
300	206	-.331	.061	-.123	-.616
300	207	-.310	.062	-.110	-.593
300	208	-.392	.078	-.176	-1.064
300	209	-.393	.068	-.220	-.711
300	210	-.371	.063	-.191	-.703
300	211	-.346	.057	-.169	-.582

WD	TAP	CPMEAN	CPRMS	CPMAX	CPMIN
300	212	-.351	.058	-.183	-.558
300	213	-.336	.055	-.139	-.577
300	214	-.544	.121	-.156	-1.341
300	215	-.395	.093	-.110	-1.114
300	216	-.367	.080	-.131	-.798
300	217	-.341	.072	-.021	-.742
300	218	-.331	.066	-.061	-.786
300	219	-.314	.059	-.104	-.576
300	220	-.289	.061	-.023	-.541
300	221	-.282	.062	.015	-.555
300	222	-.398	.123	.030	-1.120
300	223	-.507	.104	-.207	-1.216
300	224	-.378	.085	-.096	-.800
300	225	-.499	.079	-.240	-.812
300	225	-.499	.079	-.240	-.812
300	226	-.350	.071	-.170	-.767
300	227	-.338	.070	-.121	-.754
300	228	-.313	.067	-.086	-.662
300	229	-.304	.070	-.057	-.726
300	230	-.509	.161	.026	-2.178
300	232	-.484	.097	-.247	-1.128
300	233	-.531	.151	.117	-1.324
300	234	-.368	.145	.381	-.975
300	235	-.335	.099	.159	-.900
300	236	-.381	.102	.016	-1.270
300	237	-.499	.102	-.256	-1.300
300	239	-.349	.086	-.120	-.996
300	240	-.349	.080	-.128	-.792
300	241	-.240	.060	.004	-.531
300	242	-.227	.063	.035	-.549
300	243	-.462	.095	.194	-1.003
300	244	-.330	.086	.127	-.753
300	245	-.397	.112	-.156	-1.134
300	249	-.468	.096	-.057	-.950
300	250	-.512	.105	-.231	-1.259
300	252	-.250	.064	-.040	-.529
300	253	-.410	.092	-.077	-.834
300	254	-.252	.062	-.029	-.588
300	255	-.349	.096	.051	-.868
300	256	-.464	.088	-.243	-.938
300	257	-.493	.095	-.198	-.996
300	258	-.486	.100	-.140	-1.031
300	259	-.265	.063	-.039	-.535
300	260	-.291	.079	-.017	-.658
300	261	-.236	.051	-.090	-.681
300	262	-.527	.191	.001	-1.639
300	263	-.474	.138	-.021	-1.368
300	264	-.527	.141	-.051	-1.785
300	265	-.519	.136	-.194	-1.358
300	266	-.504	.115	-.210	-1.089

WD	TAP	CPMEAN	CPRMS	CPMAX	CPMIN
300	267	-.512	.119	-.238	-1.139
300	268	-.517	.126	-.187	-1.166
300	269	-.484	.101	-.164	-.977
300	270	-.428	.068	-.229	-.726
300	271	-.557	.142	-.184	-1.440
300	272	-.485	.101	-.213	-1.007
300	273	-.475	.093	-.199	-.923
300	280	-.450	.091	-.217	-.998
300	301	-.481	.076	-.269	-.879
300	302	-.230	.070	.035	-.626
300	303	-.223	.065	-.015	-.466
300	304	-.237	.065	-.000	-.478
300	305	-.253	.071	.031	-.529
300	306	-.336	.064	-.131	-.617
300	307	-.342	.064	-.085	-.622
300	308	-.534	.091	-.198	-1.062
300	309	-.311	.066	-.085	-.564
300	310	-.323	.070	-.033	-.579
300	311	-.349	.079	-.029	-.776
300	312	-.504	.084	-.251	-.993
300	313	-.282	.094	.047	-.865
300	314	-.370	.073	-.079	-.725
300	315	-.387	.067	-.140	-.675
300	316	-.460	.073	-.137	-.811
300	317	-.272	.068	-.034	-.559
300	318	-.422	.084	-.099	-.858
300	319	-.276	.062	-.009	-.490
300	320	-.298	.062	-.116	-.569
300	321	-.316	.069	-.081	-.726
300	322	-.359	.074	-.086	-.631
300	323	-.369	.082	-.075	-.798
300	324	-.289	.094	.046	-.769
300	325	-.290	.083	.055	-.698
300	326	-.278	.069	-.055	-.646
300	327	-.422	.072	-.132	-.722
300	328	-.392	.119	-.091	-1.029
300	329	-.404	.119	-.103	-1.026
300	330	-.407	.120	-.086	-1.050
300	331	-.226	.096	.120	-1.250
300	332	-.217	.083	.152	-.884
300	333	-.219	.067	.107	-.473
300	334	-.226	.066	.035	-.473
300	335	-.244	.065	.085	-.584
300	336	-.258	.070	-.012	-.555
300	337	-.271	.079	.028	-.633
300	338	-.283	.092	.074	-.703
300	339	-.285	.108	.186	-.958
300	340	-.196	.072	.103	-.703
300	341	-.192	.064	.153	-.616
300	342	-.191	.056	.291	-.403

APPENDIX A -- PRESSURE DATA: BASS BROTHERS BUILDING - PHASE I, DALLAS, TEXAS -- CONFIGURATION A

WD	TAP	CPMEAN	CPRMS	CPMAX	CPMIN
300	343	-.195	.054	.225	-.411
300	344	-.219	.055	.086	-.429
300	345	-.229	.058	.030	-.506
300	346	-.235	.065	.053	-.596
300	347	-.254	.075	.173	-.658
300	348	-.266	.087	.199	-.663
300	349	-.212	.065	.050	-.621
300	350	-.207	.060	.075	-.637
300	352	-.204	.054	.120	-.388
300	353	-.234	.056	.032	-.724
300	354	-.233	.057	.089	-.596
300	355	-.240	.060	.114	-.609
300	359	-.243	.059	-.012	-.600
300	360	-.349	.068	-.094	-.604
300	361	-.224	.053	-.004	-.445
300	362	-.237	.056	-.055	-.743
300	363	-.239	.060	-.063	-.733
300	364	-.241	.056	-.058	-.596
300	365	-.393	.081	-.021	-.905
300	366	-.449	.110	-.108	-.911
300	367	-.247	.059	.050	-.574
300	368	-.364	.065	-.085	-.626
300	369	-.233	.048	-.079	-.479
300	370	-.211	.042	-.068	-.365
300	371	-.214	.048	-.006	-.418
300	372	-.233	.050	-.017	-.422
300	373	-.385	.090	-.091	-.761
300	374	-.230	.052	-.038	-.486
300	375	-.211	.042	-.072	-.377
300	376	-.441	.087	-.140	-.977
300	377	-.450	.090	-.147	-.999
300	378	-.496	.116	-.178	-1.534
300	379	-.423	.071	-.152	-.730
300	380	-.356	.058	-.101	-.585
300	381	-.234	.048	-.097	-.425
300	382	-.396	.090	-.019	-.839
300	383	-.490	.107	-.065	-1.110
300	384	-.391	.064	-.008	-.699
300	385	-.391	.091	-.072	-.933
300	386	-.415	.090	-.139	-.876
300	387	-.394	.090	-.044	-1.027
300	388	-.423	.088	.029	-.855
300	389	-.368	.070	-.079	-.732
300	390	-.369	.065	-.073	-.622
300	391	-.422	.077	-.153	-.691
300	392	-.606	.163	-.219	-1.264
300	393	-.514	.107	-.185	-1.058
300	401	-.028	.182	.508	-.865
300	402	-.115	.107	.270	-.562
300	403	-.512	.219	.200	-1.723

WD	TAP	CPMEAN	CPRMS	CPMAX	CPMIN
300	404	-.106	.218	.485	-1.074
300	405	-.058	.098	.275	-.720
300	406	-.204	.073	.136	-.558
300	407	-.155	.056	.080	-.394
300	408	-.540	.213	.244	-1.449
300	409	-.478	.223	.106	-1.510
300	410	-.506	.241	.132	-1.889
300	411	-.450	.201	.242	-1.274
300	412	.074	.232	.859	-.773
300	413	-.446	.205	.209	-1.256
300	414	-.337	.092	-.033	-.701
300	415	-.464	.093	-.047	-.809
300	416	-.327	.181	.511	-1.093
300	417	-.115	.256	.698	-.963
300	418	.179	.224	.806	-.603
300	419	-.337	.096	-.019	-.784
300	420	-.296	.100	.128	-.737
300	421	.000	.314	.931	-.957
300	422	-.018	.250	.741	-.959
300	423	-.386	.181	.202	-1.299
300	424	-.294	.177	.316	-1.579
300	425	-.252	.159	.205	-1.211
300	426	-.263	.166	.282	-1.159
300	427	-.255	.159	.306	-.988
300	428	-.168	.240	.698	-.926
300	429	-.180	.212	.446	-1.053
300	430	-.083	.142	.349	-.730
300	431	-.127	.110	.264	-.605
300	432	-.168	.085	.135	-.697
300	433	-.318	.206	.505	-1.257
300	434	-.264	.178	.200	-1.324
300	435	-.257	.176	.162	-1.318
300	436	-.236	.161	.349	-.961
300	437	-.113	.214	.525	-.795
300	438	-.066	.162	.393	-.725
300	439	-.191	.110	.173	-.858
300	440	-.115	.077	.211	-.551
300	441	-.143	.070	.115	-.564
300	442	-.277	.096	.184	-.991
300	443	-.207	.077	.282	-.631
300	444	-.196	.073	.130	-.545
300	445	.070	.178	.760	-.845
300	446	.018	.152	.572	-.933
300	447	-.299	.110	.162	-.729
300	449	-.298	.173	.071	-1.269
300	450	-.151	.168	.347	-1.127
300	451	-.260	.199	.309	-1.467
300	452	-.408	.095	-.023	-.823
300	453	-.418	.085	.033	-.794
300	454	-.239	.208	.669	-1.425

WD	TAP	CPMEAN	CPRMS	CPMAX	CPMIN
300	455	-.328	.166	.069	-1.415
300	456	-.162	.152	.213	-.905
300	457	-.146	.157	.179	-1.060
300	458	-.087	.098	.307	-.605
300	459	.026	.150	.575	-.602
300	460	-.039	.109	.476	-.445
300	461	-.368	.100	-.023	-.894
300	462	-.221	.189	.407	-1.336
300	463	-.205	.168	.140	-1.960
300	464	-.225	.112	.158	-.658
300	465	-.237	.067	.171	-.538
300	466	-.179	.181	.397	-.971
300	467	-.120	.146	.336	-1.119
300	468	-.030	.105	.343	-.796
300	469	-.179	.070	.256	-.658
300	470	-.160	.054	.039	-.425
300	471	-.205	.054	.037	-.427
300	472	-.196	.154	.266	-1.120
300	473	-.204	.113	.133	-.957
300	474	-.168	.056	.085	-.485
300	475	-.211	.049	.006	-.379
300	476	-.307	.051	.007	-.535
300	477	-.452	.100	-.181	-.981
300	478	-.382	.070	-.126	-.647
300	479	-.338	.166	.163	-.997
300	480	-.176	.058	.075	-.388
300	481	-.340	.062	-.028	-.552
300	482	-.568	.140	-.178	-1.406
300	483	-.517	.105	-.175	-.998
300	484	-.314	.056	-.053	-.548
300	702	-.110	.119	.218	-.729
300	703	-.132	.156	.487	-1.532
300	704	-.175	.129	.410	-1.021
300	801	-.863	.194	-.256	-1.622
300	802	-.506	.124	-.007	-1.156
300	803	-.364	.091	-.053	-.816
300	804	-.437	.087	-.187	-.807
300	805	-.389	.065	-.174	-.759
300	806	-.005	.193	.508	-.577
300	807	-.391	.093	-.005	-.911
300	808	-.240	.102	.118	-.622
300	809	-.392	.073	-.146	-.759
300	810	-.365	.089	.097	-.758
300	811	-.204	.091	.052	-.613
300	905	-.700	.198	-.227	-2.205
300	906	-.156	.093	.133	-.727
300	907	-.246	.077	.067	-.642
300	909	-.161	.110	.178	-.725
300	909	-.197	.109	.165	-.645
300	910	-.474	.097	-.099	-.919

APPENDIX A -- PRESSURE DATA: BASS BROTHERS BUILDING - PHASE I, DALLAS, TEXAS -- CONFIGURATION A

WD	TAP	CPMEAN	CPRMS	CPMAX	CPMIN
300	911	-.252	.044	-.091	-.417
300	912	-.227	.051	.017	-.456
300	913	-.388	.064	-.144	-.633
300	915	-.479	.111	-.149	-1.312
310	101	.034	.118	.479	-.528
310	102	.249	.154	.862	-.211
310	103	-.202	.133	.362	-.637
310	104	-.182	.136	.346	-.619
310	105	-.091	.122	.442	-.481
310	106	.072	.103	.430	-.206
310	107	.155	.113	.585	-.172
310	108	.295	.142	.769	-.184
310	109	.252	.138	.700	-.190
310	110	-.016	.108	.402	-.383
310	111	.191	.150	.816	-.334
310	112	.122	.116	.552	-.162
310	113	.399	.160	.946	.003
310	114	.433	.152	.951	.042
310	115	.510	.161	1.019	.016
310	116	-.082	.150	.437	-.775
310	117	.292	.141	.821	-.148
310	118	.401	.145	.904	.027
310	119	.444	.150	.920	.040
310	120	.447	.149	.951	.042
310	121	.448	.152	.983	.051
310	122	.369	.149	.963	-.056
310	123	.305	.138	.850	-.226
310	124	-.144	.145	.387	-.899
310	125	.217	.131	.698	-.163
310	126	.318	.131	.816	-.078
310	127	.363	.131	.847	.031
310	128	.354	.129	.834	.035
310	129	.295	.145	.924	-.036
310	130	.312	.140	.860	-.041
310	131	.196	.132	.726	-.226
310	133	-.047	.151	.486	-.872
310	134	.086	.108	.557	-.302
310	135	.146	.098	.623	-.121
310	136	.170	.094	.554	-.038
310	137	.192	.103	.639	-.036
310	139	.025	.126	.536	-.357
310	140	-.272	.162	.204	-1.131
310	141	-.050	.080	.267	-.412
310	142	-.042	.082	.293	-.417
310	143	.057	.071	.372	-.205
310	144	.144	.074	.444	-.072
310	145	.176	.084	.570	-.036
310	146	.235	.111	.749	-.097
310	147	.031	.122	.557	-.389
310	148	-.175	.120	.494	-.655

WD	TAP	CPMEAN	CPRMS	CPMAX	CPMIN
310	149	-.111	.118	.603	-.666
310	150	-.143	.059	.104	-.408
310	151	.031	.074	.293	-.177
310	152	.102	.057	.358	-.055
310	153	-.186	.164	.377	-.830
310	154	.042	.061	.275	-.242
310	155	.017	.076	.458	-.355
310	156	-.295	.069	.015	-.557
310	157	-.064	.068	.203	-.494
310	158	.133	.103	.601	-.138
310	159	-.068	.064	.216	-.419
310	160	-.031	.055	.215	-.275
310	161	-.099	.085	.276	-.458
310	162	-.669	.158	-.263	-1.501
310	163	-.834	.239	-.276	-1.858
310	164	-.276	.203	.574	-1.279
310	165	-.275	.147	.202	-.877
310	166	-.283	.081	-.006	-.793
310	167	-.000	.080	.406	-.218
310	168	.171	.117	.605	-.146
310	169	.153	.123	.760	-.176
310	170	-.039	.085	.326	-.354
310	171	.025	.114	.548	-.392
310	201	-.401	.136	.005	-1.233
310	202	-.423	.116	-.076	-.898
310	203	-.365	.097	.007	-.941
310	204	-.391	.088	-.082	-.846
310	205	-.377	.072	-.157	-.783
310	206	-.396	.078	-.180	-.910
310	207	-.391	.078	-.166	-.950
310	208	-.402	.128	-.032	-.978
310	209	-.393	.108	.064	-.862
310	210	-.390	.094	-.053	-.818
310	211	-.379	.076	-.108	-.747
310	212	-.375	.074	-.114	-.649
310	213	-.361	.070	-.134	-.732
310	214	-.586	.145	-.179	-1.357
310	215	-.416	.118	-.076	-1.124
310	216	-.407	.095	-.141	-.888
310	217	-.397	.081	-.064	-.818
310	218	-.407	.076	-.196	-.730
310	219	-.386	.072	-.130	-.619
310	220	-.369	.069	-.111	-.613
310	221	-.376	.069	-.114	-.621
310	222	-.484	.182	.027	-1.559
310	223	-.556	.154	.133	-1.316
310	224	-.420	.111	.029	-.962
310	225	-.548	.096	-.101	-.877
310	225	-.548	.096	-.101	-.877
310	226	-.443	.097	-.181	-.955

WD	TAP	CPMEAN	CPRMS	CPMAX	CPMIN
310	227	-.427	.094	-.171	-.970
310	228	-.397	.080	-.183	-.830
310	229	-.402	.080	-.177	-.833
310	230	-.449	.127	-.115	-1.292
310	232	-.618	.142	-.238	-1.531
310	233	-.405	.192	.426	-1.348
310	234	-.257	.186	.474	-.969
310	235	-.325	.140	.305	-.946
310	236	-.479	.134	.041	-1.249
310	237	-.619	.144	-.022	-1.518
310	239	-.479	.130	-.157	-1.756
310	240	-.461	.125	-.123	-1.214
310	241	-.237	.064	-.013	-.488
310	242	-.234	.066	.094	-.578
310	243	-.411	.130	.042	-1.023
310	244	-.290	.112	.203	-.703
310	245	-.472	.146	.114	-1.331
310	249	-.422	.121	.019	-.939
310	250	-.656	.176	-.150	-1.786
310	252	-.225	.062	.047	-.676
310	253	-.379	.127	.112	-.931
310	254	-.223	.075	.134	-.519
310	255	-.334	.132	.072	-.887
310	256	-.553	.116	-.216	-1.303
310	257	-.586	.122	-.233	-1.413
310	258	-.567	.123	-.197	-1.263
310	259	-.230	.068	-.017	-.511
310	260	-.231	.095	.130	-.533
310	261	-.239	.059	-.043	-.617
310	262	-.468	.188	.066	-1.537
310	263	-.488	.177	.100	-1.331
310	264	-.513	.165	.056	-1.475
310	265	-.538	.149	.023	-1.225
310	266	-.566	.128	-.256	-1.240
310	267	-.594	.136	-.252	-1.257
310	268	-.593	.156	-.200	-1.453
310	269	-.564	.125	-.197	-1.522
310	270	-.410	.077	-.216	-.756
310	271	-.579	.164	-.196	-1.515
310	272	-.529	.114	-.209	-1.002
310	273	-.481	.098	-.168	-.898
310	280	-.525	.116	-.170	-1.206
310	301	-.490	.091	-.166	-.892
310	302	-.255	.080	.012	-.649
310	303	-.251	.074	-.030	-.657
310	304	-.235	.068	-.009	-.668
310	305	-.245	.073	.015	-.720
310	306	-.384	.075	-.089	-.796
310	307	-.372	.081	-.107	-.813
310	308	-.522	.098	-.155	-1.059

APPENDIX A -- PRESSURE DATA: BASS BROTHERS BUILDING - PHASE I, DALLAS, TEXAS -- CONFIGURATION A

WD	TAP	CPMEAN	CPRMS	CPMAX	CPMIN
310	309	-.357	.079	-.103	-.662
310	310	-.369	.081	-.092	-.794
310	311	-.324	.073	-.079	-.672
310	312	-.485	.098	-.192	-1.149
310	313	-.302	.123	.020	-1.231
310	314	-.405	.109	-.055	-1.194
310	315	-.416	.089	-.157	-.930
310	316	-.483	.086	-.137	-.844
310	317	-.302	.094	-.062	-.847
310	318	-.447	.096	-.153	-.911
310	319	-.270	.062	-.081	-.546
310	320	-.281	.060	-.106	-.569
310	321	-.295	.062	-.112	-.605
310	322	-.338	.079	-.112	-.693
310	323	-.340	.084	-.035	-1.084
310	324	-.328	.128	.073	-.946
310	325	-.320	.110	.079	-.911
310	326	-.290	.076	-.052	-.781
310	327	-.412	.075	-.156	-.766
310	328	-.327	.105	-.101	-1.195
310	329	-.382	.121	-.071	-1.234
310	330	-.390	.117	-.117	-1.017
310	331	-.271	.117	.136	-1.051
310	332	-.246	.093	.119	-.936
310	333	-.242	.061	-.003	-.500
310	334	-.228	.057	.028	-.510
310	335	-.239	.057	.021	-.581
310	336	-.270	.059	-.064	-.619
310	337	-.298	.065	-.060	-.748
310	338	-.306	.071	-.018	-.682
310	339	-.325	.078	-.041	-.820
310	340	-.235	.090	.030	-1.050
310	341	-.212	.071	.086	-.887
310	342	-.213	.052	-.009	-.398
310	343	-.219	.050	-.045	-.409
310	344	-.218	.046	-.059	-.471
310	345	-.232	.051	.009	-.598
310	346	-.264	.057	-.021	-.597
310	347	-.302	.068	.032	-.562
310	348	-.318	.080	.134	-.607
310	349	-.235	.073	-.004	-.700
310	350	-.238	.065	-.042	-.912
310	352	-.221	.048	-.008	-.483
310	353	-.266	.057	-.054	-.546
310	354	-.285	.059	-.102	-.569
310	355	-.293	.060	-.107	-.594
310	359	-.299	.071	-.122	-.728
310	360	-.396	.076	-.127	-.816
310	361	-.258	.050	-.079	-.453
310	362	-.259	.055	-.020	-.610

WD	TAP	CPMEAN	CPRMS	CPMAX	CPMIN
310	363	-.284	.061	-.133	-.623
310	364	-.296	.065	-.134	-.625
310	365	-.413	.077	-.230	-.892
310	366	-.487	.101	-.064	-1.164
310	367	-.308	.075	-.129	-.787
310	368	-.360	.058	-.176	-.625
310	369	-.237	.048	-.075	-.461
310	370	-.219	.039	-.063	-.373
310	371	-.244	.056	-.077	-.565
310	372	-.263	.059	-.106	-.500
310	373	-.395	.088	-.071	-.835
310	374	-.240	.047	-.068	-.478
310	375	-.216	.038	-.088	-.417
310	376	-.425	.071	-.204	-.888
310	377	-.444	.078	-.207	-.956
310	378	-.490	.098	-.230	-.991
310	379	-.412	.061	-.211	-.761
310	380	-.349	.048	-.198	-.594
310	381	-.241	.051	-.034	-.461
310	382	-.406	.109	.012	-.964
310	383	-.421	.081	-.228	-.915
310	384	-.370	.068	-.129	-.624
310	385	-.383	.087	-.069	-.752
310	386	-.386	.063	-.105	-.642
310	387	-.397	.107	-.003	-.861
310	388	-.437	.098	-.090	-.943
310	389	-.379	.067	-.160	-.693
310	390	-.326	.063	-.081	-.545
310	391	-.395	.086	-.143	-.714
310	392	-.589	.193	-.129	-1.513
310	393	-.541	.133	-.134	-1.263
310	401	-.352	.193	.214	-1.005
310	402	-.271	.107	.055	-.803
310	403	-.660	.183	.011	-1.483
310	404	-.397	.206	.308	-1.321
310	405	-.113	.129	.215	-.807
310	406	-.242	.088	.049	-.767
310	407	-.182	.069	.087	-.574
310	408	-.683	.197	-.151	-1.675
310	409	-.683	.206	-.157	-1.798
310	410	-.719	.215	-.182	-1.836
310	411	-.625	.158	-.047	-1.402
310	412	-.127	.312	.825	-1.040
310	413	-.378	.163	.141	-1.184
310	414	-.338	.123	.082	-1.001
310	415	-.456	.104	-.126	-.916
310	416	-.487	.163	.021	-1.176
310	417	-.422	.198	.524	-1.171
310	418	-.156	.258	.789	-.934
310	419	-.342	.133	.299	-1.183

WD	TAP	CPMEAN	CPRMS	CPMAX	CPMIN
310	420	-.318	.140	.185	-1.028
310	421	-.425	.273	.810	-1.570
310	422	-.360	.300	.718	-1.418
310	423	-.432	.202	.247	-1.473
310	424	-.384	.110	.175	-1.223
310	425	-.397	.110	.236	-1.037
310	426	-.414	.113	.210	-.965
310	427	-.405	.127	.101	-1.055
310	428	-.404	.168	.384	-1.186
310	429	-.484	.204	.245	-1.270
310	430	-.289	.185	.249	-1.057
310	431	-.269	.171	.275	-1.164
310	432	-.262	.163	.302	-1.258
310	433	-.453	.163	.107	-1.465
310	434	-.455	.161	.076	-1.433
310	435	-.450	.171	.113	-1.464
310	436	-.429	.153	.138	-1.086
310	437	-.391	.211	.477	-1.138
310	438	-.282	.216	.383	-1.079
310	439	-.334	.181	.172	-1.071
310	440	-.200	.138	.217	-.873
310	441	-.198	.129	.173	-1.009
310	442	-.382	.134	.090	-1.044
310	443	-.235	.102	.269	-.970
310	444	-.208	.102	.198	-.782
310	445	-.055	.231	.735	-.939
310	446	-.038	.218	.669	-.962
310	447	-.318	.113	.091	-.875
310	449	-.530	.190	-.059	-1.492
310	450	-.451	.253	.314	-1.947
310	451	-.547	.267	.226	-2.346
310	452	-.425	.087	.026	-.761
310	453	-.471	.088	-.140	-1.025
310	454	-.480	.208	.042	-2.119
310	455	-.544	.193	-.064	-1.520
310	456	-.427	.193	.100	-1.702
310	457	-.436	.241	.180	-1.703
310	458	-.251	.126	.195	-.769
310	459	-.084	.197	.575	-.689
310	460	-.028	.164	.668	-.603
310	461	-.382	.096	.071	-.803
310	462	-.477	.218	.137	-2.083
310	463	-.419	.228	.095	-1.722
310	464	-.355	.125	.026	-.819
310	465	-.284	.104	.204	-.739
310	466	-.464	.202	.150	-1.352
310	467	-.350	.203	.062	-1.373
310	468	-.165	.157	.294	-.960
310	469	-.228	.076	.214	-.695
310	470	-.186	.051	.050	-.496

APPENDIX A -- PRESSURE DATA: BASS BROTHERS BUILDING - PHASE I, DALLAS, TEXAS -- CONFIGURATION A

WD	TAP	CPMEAN	CPRMS	CPMAX	CPMIN
310	471	-.227	.050	-.031	-.523
310	472	-.357	.188	.118	-1.150
310	473	-.314	.158	.061	-1.365
310	474	-.220	.061	-.013	-.559
310	475	-.256	.051	-.027	-.459
310	476	-.345	.054	-.171	-.553
310	477	-.448	.086	-.228	-.844
310	478	-.343	.059	-.152	-.580
310	479	-.495	.156	.062	-1.090
310	480	-.224	.054	.011	-.458
310	481	-.349	.057	-.129	-.602
310	482	-.468	.116	-.179	-.954
310	483	-.448	.101	-.170	-.851
310	484	-.344	.057	-.127	-.601
310	702	-.236	.143	.196	-.896
310	703	-.272	.223	.206	-2.164
310	704	-.293	.135	.126	-1.149
310	801	-.844	.222	-.089	-1.663
310	802	-.483	.109	-.125	-1.029
310	803	-.429	.105	-.113	-1.099
310	804	-.454	.105	-.044	-.906
310	805	-.377	.078	-.096	-.872
310	806	-.256	.196	.440	-.860
310	807	-.403	.101	.044	-.829
310	808	-.208	.092	.123	-.747
310	809	-.384	.120	.191	-.963
310	810	-.387	.107	-.009	-.999
310	811	-.176	.085	.200	-.630
310	905	-.871	.251	-.194	-2.120
310	906	-.249	.126	.247	-.791
310	907	-.234	.073	.098	-.572
310	908	-.269	.135	.171	-.921
310	909	-.353	.119	.035	-.895
310	910	-.479	.115	-.146	-.954
310	911	-.279	.047	-.108	-.460
310	912	-.220	.057	.040	-.558
310	913	-.352	.063	-.163	-.615
310	915	-.447	.079	-.196	-.834
320	101	.121	.131	.594	-.464
320	102	.220	.155	.841	-.283
320	103	-.069	.187	.611	-.695
320	104	-.091	.165	.533	-.595
320	105	-.016	.155	.556	-.532
320	106	.088	.116	.560	-.298
320	107	.147	.126	.784	-.224
320	108	.256	.154	.753	-.369
320	109	.182	.138	.759	-.320
320	110	.079	.135	.654	-.374
320	111	.230	.156	.914	-.264
320	112	.137	.109	.531	-.143
320	113	.404	.161	1.043	-.016
320	114	.450	.156	.959	.003
320	115	.467	.158	1.073	.067
320	116	.051	.130	.494	-.653
320	117	.373	.159	1.005	-.082
320	118	.434	.159	1.007	-.033
320	119	.461	.156	1.018	.078
320	120	.466	.156	1.063	.084
320	121	.447	.155	1.005	.071
320	122	.320	.141	.784	-.048
320	123	.202	.123	.658	-.135
320	124	-.043	.137	.523	-.991
320	125	.277	.144	1.026	-.169
320	126	.329	.141	1.017	-.126
320	127	.350	.136	.980	-.067
320	128	.348	.141	.959	-.023
320	129	.297	.169	1.029	-.084
320	130	.245	.134	.717	-.126
320	131	.101	.124	.567	-.307
320	133	-.011	.156	.626	-.606
320	134	.075	.115	.571	-.313
320	135	.125	.100	.564	-.186
320	136	.150	.089	.517	-.095
320	137	.153	.088	.591	-.094
320	139	-.100	.120	.628	-.544
320	140	-.147	.156	.591	-1.205
320	141	-.021	.085	.395	-.375
320	142	-.036	.077	.357	-.495
320	143	.050	.064	.397	-.176
320	144	.123	.071	.501	-.079
320	145	.145	.075	.534	-.061
320	146	.183	.104	.671	-.288
320	147	-.075	.125	.521	-.528
320	148	-.069	.133	.527	-.842
320	149	-.001	.148	.590	-.710
320	150	-.093	.075	.268	-.360
320	151	.029	.077	.320	-.180
320	152	.100	.058	.324	-.062
320	153	-.342	.196	.273	-1.223
320	154	.052	.064	.282	-.293
320	155	-.055	.081	.248	-.414
320	156	-.238	.068	.135	-.602
320	157	-.027	.078	.335	-.216
320	158	.123	.111	.625	-.146
320	159	-.119	.065	.124	-.404
320	160	-.083	.062	.204	-.392
320	161	-.189	.097	.169	-.751
320	162	-.565	.141	-.131	-1.183
320	163	-.818	.233	-.119	-1.797
320	164	-.518	.245	.251	-1.672
320	165	-.438	.163	.084	-1.142
320	166	-.229	.086	.103	-.658
320	167	.045	.088	.474	-.203
320	168	.155	.113	.607	-.132
320	169	.087	.107	.602	-.257
320	170	-.086	.082	.361	-.353
320	171	-.027	.120	.566	-.353
320	201	-.385	.114	-.098	-.974
320	202	-.426	.128	.040	-1.061
320	203	-.334	.121	.052	-.913
320	204	-.437	.131	.005	-.977
320	205	-.420	.103	-.122	-1.129
320	206	-.425	.124	-.067	-1.051
320	207	-.420	.118	-.075	-1.108
320	208	-.337	.136	.166	-1.131
320	209	-.340	.162	.397	-1.095
320	210	-.376	.151	.444	-.929
320	211	-.410	.115	.206	-.955
320	212	-.430	.115	-.090	-1.077
320	213	-.401	.102	-.096	-.820
320	214	-.542	.196	-.101	-1.548
320	215	-.404	.200	.223	-1.420
320	216	-.415	.164	.347	-1.117
320	217	-.375	.118	.380	-.852
320	218	-.439	.124	.126	-.939
320	219	-.440	.114	-.086	-1.121
320	220	-.400	.096	-.079	-1.228
320	221	-.400	.094	-.104	-.904
320	222	-.336	.163	.037	-1.284
320	223	-.439	.246	.344	-1.267
320	224	-.278	.231	.664	-1.012
320	225	-.468	.179	.317	-1.013
320	225	-.468	.179	.317	-1.013
320	226	-.462	.188	.210	-1.336
320	227	-.497	.168	.067	-1.434
320	228	-.458	.139	-.149	-1.322
320	229	-.456	.137	-.063	-1.287
320	230	-.439	.104	.181	-.881
320	232	-.665	.211	-.043	-1.849
320	233	-.201	.180	.509	-.989
320	234	-.058	.170	.650	-.914
320	235	-.119	.156	.398	-.761
320	236	-.389	.199	.415	-1.184
320	237	-.595	.207	.120	-1.446
320	239	-.624	.245	-.066	-2.247
320	240	-.567	.202	-.092	-1.838
320	241	-.229	.061	-.020	-.485
320	242	-.249	.064	-.005	-.610
320	243	-.277	.107	.120	-.851
320	244	-.153	.119	.280	-.768

APPENDIX A -- PRESSURE DATA: BASS BROTHERS BUILDING - PHASE I, DALLAS, TEXAS -- CONFIGURATION A

WD	TAP	CPMEAN	CPRMS	CPMAX	CPMIN
320	245	-.340	.191	.273	-1.107
320	249	-.350	.077	-.052	-.821
320	250	-.788	.282	.093	-2.092
320	252	-.247	.061	-.031	-.534
320	253	-.320	.078	.023	-.756
320	254	-.186	.045	.003	-.386
320	255	-.161	.112	.222	-.813
320	256	-.504	.148	-.172	-1.172
320	257	-.568	.155	-.195	-1.296
320	258	-.550	.134	-.165	-1.379
320	259	-.165	.042	-.043	-.352
320	260	-.108	.078	.212	-.417
320	261	-.229	.052	-.070	-.506
320	262	-.356	.110	-.014	-1.120
320	263	-.345	.130	.142	-1.126
320	264	-.351	.119	.064	-1.025
320	265	-.388	.132	-.057	-1.276
320	266	-.495	.145	-.121	-1.269
320	267	-.554	.156	-.180	-1.617
320	268	-.552	.163	-.194	-1.309
320	269	-.527	.144	-.180	-1.788
320	270	-.376	.064	-.205	-.673
320	271	-.450	.139	-.116	-1.141
320	272	-.432	.125	-.151	-1.017
320	273	-.419	.100	-.109	-.935
320	280	-.496	.165	-.143	-1.530
320	301	-.484	.096	-.206	-.883
320	302	-.304	.111	-.007	-1.227
320	303	-.299	.092	-.004	-.868
320	304	-.284	.086	-.047	-.689
320	305	-.289	.083	-.040	-.696
320	306	-.421	.107	-.062	-.979
320	307	-.414	.110	-.073	-.911
320	308	-.490	.113	-.104	-1.003
320	309	-.362	.084	-.089	-.684
320	310	-.381	.086	-.113	-.735
320	311	-.299	.070	-.073	-.627
320	312	-.453	.099	-.134	-.962
320	313	-.300	.111	.006	-1.112
320	314	-.411	.095	-.135	-1.065
320	315	-.430	.084	-.194	-.940
320	316	-.487	.084	-.171	-.818
320	317	-.300	.090	-.031	-.992
320	318	-.451	.085	-.139	-.942
320	319	-.271	.058	-.099	-.559
320	320	-.279	.060	-.105	-.511
320	321	-.285	.061	-.106	-.539
320	322	-.310	.084	-.068	-.698
320	323	-.307	.090	-.047	-.879
320	324	-.319	.114	.021	-1.140

WD	TAP	CPMEAN	CPRMS	CPMAX	CPMIN
320	325	-.304	.094	-.042	-1.490
320	326	-.287	.068	-.077	-.650
320	327	-.411	.068	-.153	-.724
320	328	-.287	.070	-.055	-.669
320	329	-.329	.095	-.038	-.859
320	330	-.337	.097	-.091	-.866
320	331	-.331	.113	-.022	-.913
320	332	-.282	.077	-.020	-.716
320	333	-.270	.054	-.089	-.498
320	334	-.255	.053	-.081	-.465
320	335	-.260	.053	-.053	-.471
320	336	-.281	.064	-.051	-.541
320	337	-.297	.073	-.080	-.603
320	338	-.293	.086	-.045	-.735
320	339	-.306	.102	-.046	-.899
320	340	-.311	.121	.001	-.895
320	341	-.271	.081	-.034	-.690
320	342	-.256	.056	-.088	-.510
320	343	-.263	.054	-.105	-.500
320	344	-.258	.055	-.095	-.536
320	345	-.266	.064	-.093	-.610
320	346	-.280	.072	-.081	-.648
320	347	-.296	.083	-.042	-.687
320	348	-.288	.091	-.015	-.655
320	349	-.297	.103	-.018	-.845
320	350	-.284	.085	-.008	-.766
320	352	-.252	.056	-.083	-.554
320	353	-.284	.074	-.109	-.803
320	354	-.295	.076	-.138	-.800
320	355	-.300	.075	-.136	-.794
320	359	-.364	.120	-.037	-1.097
320	360	-.467	.121	-.187	-1.067
320	361	-.287	.065	-.095	-.656
320	362	-.298	.076	-.078	-.798
320	363	-.313	.077	-.127	-.768
320	364	-.318	.079	-.130	-.760
320	365	-.434	.089	-.210	-.938
320	366	-.498	.102	-.264	-1.128
320	367	-.306	.078	-.099	-.695
320	368	-.396	.077	-.155	-.747
320	369	-.248	.056	-.048	-.563
320	370	-.240	.054	-.052	-.460
320	371	-.280	.072	-.072	-.700
320	372	-.281	.070	-.108	-.602
320	373	-.414	.102	-.184	-1.016
320	374	-.256	.051	-.077	-.504
320	375	-.247	.054	-.086	-.502
320	376	-.456	.112	-.163	-1.165
320	377	-.444	.107	-.140	-1.159
320	378	-.510	.139	-.190	-1.227

WD	TAP	CPMEAN	CPRMS	CPMAX	CPMIN
320	379	-.421	.069	-.227	-.814
320	380	-.412	.077	-.244	-.803
320	381	-.284	.071	-.023	-.599
320	382	-.458	.114	-.172	-.977
320	383	-.395	.076	-.192	-.803
320	384	-.405	.087	.024	-.927
320	385	-.433	.101	-.179	-.903
320	386	-.399	.081	-.208	-.860
320	387	-.432	.111	-.121	-.978
320	388	-.451	.100	.004	-1.028
320	389	-.398	.077	-.146	-.946
320	390	-.326	.061	-.111	-.651
320	391	-.363	.074	-.065	-.691
320	392	-.455	.147	-.050	-1.314
320	393	-.407	.108	-.084	-1.092
320	401	-.536	.168	.050	-1.350
320	402	-.393	.151	-.009	-1.175
320	403	-.691	.152	-.247	-1.441
320	404	-.675	.160	-.053	-1.399
320	405	-.320	.144	.205	-.978
320	406	-.388	.138	.115	-1.014
320	407	-.270	.110	.128	-.842
320	408	-.699	.148	-.265	-1.419
320	409	-.708	.150	-.294	-1.458
320	410	-.749	.156	-.365	-1.528
320	411	-.702	.150	-.344	-1.381
320	412	-.539	.232	.612	-1.634
320	413	-.535	.214	.221	-1.320
320	414	-.333	.122	.214	-.960
320	415	-.485	.131	.049	-1.065
320	416	-.515	.134	-.166	-1.400
320	417	-.529	.145	-.053	-1.381
320	418	-.426	.166	.366	-1.192
320	419	-.364	.140	.219	-1.184
320	420	-.360	.153	.161	-.995
320	421	-.599	.167	.146	-1.386
320	422	-.585	.210	.261	-1.447
320	423	-.580	.220	.107	-1.715
320	424	-.422	.098	-.130	-.906
320	425	-.433	.099	-.126	-.852
320	426	-.445	.100	-.138	-.915
320	427	-.443	.106	-.118	-.986
320	428	-.472	.131	.168	-1.104
320	429	-.641	.164	.088	-1.352
320	430	-.427	.161	.247	-1.002
320	431	-.402	.172	.179	-1.087
320	432	-.409	.194	.293	-1.256
320	433	-.490	.143	-.056	-1.693
320	434	-.502	.142	-.089	-1.443
320	435	-.499	.137	-.147	-1.532

APPENDIX A -- PRESSURE DATA: BASS BROTHERS BUILDING - PHASE I, DALLAS, TEXAS -- CONFIGURATION A

WD	TAP	CPMEAN	CPRMS	CPMAX	CPMIN
320	436	-.493	.132	-.147	-1.101
320	437	-.505	.160	.228	-1.269
320	438	-.450	.174	.170	-1.116
320	439	-.525	.208	.262	-1.446
320	440	-.332	.170	.154	-1.283
320	441	-.328	.181	.163	-1.550
320	442	-.499	.179	.081	-1.582
320	443	-.327	.134	.156	-1.039
320	444	-.308	.147	.141	-1.075
320	445	-.256	.259	.744	-1.004
320	446	-.229	.263	.895	-1.047
320	447	-.372	.145	.132	-1.179
320	449	-.644	.205	-.155	-1.958
320	450	-.534	.228	.326	-1.886
320	451	-.681	.250	.033	-2.010
320	452	-.469	.112	.001	-.966
320	453	-.528	.131	.002	-1.481
320	454	-.525	.188	.047	-2.031
320	455	-.635	.192	-.036	-2.056
320	456	-.517	.193	.035	-1.575
320	457	-.528	.223	.049	-1.703
320	458	-.348	.133	.166	-.853
320	459	-.192	.214	.603	-.831
320	460	-.161	.222	.553	-.847
320	461	-.432	.111	-.033	-1.179
320	462	-.528	.195	.132	-1.930
320	463	-.536	.214	-.076	-1.827
320	464	-.431	.123	-.018	-.834
320	465	-.382	.141	.069	-1.064
320	466	-.612	.228	.059	-1.998
320	467	-.527	.255	.051	-2.149
320	468	-.341	.212	.256	-1.198
320	469	-.318	.111	.082	-.814
320	470	-.208	.058	.046	-.563
320	471	-.237	.056	.025	-.510
320	472	-.582	.248	.177	-1.683
320	473	-.467	.211	.036	-1.653
320	474	-.306	.087	.100	-.819
320	475	-.301	.055	.006	-.566
320	476	-.396	.057	-.220	-.680
320	477	-.463	.088	-.240	-.977
320	478	-.370	.067	-.161	-.668
320	479	-.642	.144	-.010	-1.230
320	480	-.280	.061	-.040	-.772
320	481	-.363	.055	-.208	-.695
320	482	-.396	.095	-.208	-1.116
320	483	-.404	.080	-.196	-.839
320	484	-.371	.061	-.128	-.665
320	702	-.382	.147	.051	-.915
320	703	-.431	.260	.092	-1.972

WD	TAP	CPMEAN	CPRMS	CPMAX	CPMIN
320	704	-.407	.152	.113	-1.278
320	801	-.713	.211	-.147	-1.628
320	802	-.512	.122	-.152	-1.281
320	803	-.478	.116	-.120	-1.079
320	804	-.460	.123	-.071	-.999
320	805	-.400	.096	-.147	-.903
320	806	-.380	.130	.241	-.913
320	807	-.399	.108	.193	-.854
320	808	-.306	.114	.163	-.895
320	809	-.352	.155	.460	-1.367
320	810	-.375	.133	.329	-1.105
320	811	-.241	.118	.259	-.929
320	905	-.836	.315	-.038	-2.530
320	906	-.402	.154	-.002	-1.048
320	907	-.163	.091	.244	-.551
320	908	-.384	.159	.219	-1.210
320	909	-.455	.135	-.014	-1.019
320	910	-.402	.090	-.151	-.882
320	911	-.320	.052	-.153	-.658
320	912	-.228	.054	-.019	-.590
320	913	-.343	.058	-.132	-.741
320	915	-.445	.088	-.190	-.877
330	101	.149	.133	.580	-.317
330	102	.152	.144	.599	-.304
330	103	.071	.238	.955	-.756
330	104	-.045	.184	.578	-.773
330	105	.112	.170	.662	-.451
330	106	.110	.115	.594	-.270
330	107	.153	.126	.641	-.232
330	108	.231	.160	.953	-.390
330	109	.134	.131	.763	-.343
330	110	.194	.145	.627	-.310
330	111	.264	.145	.729	-.176
330	112	.165	.100	.445	-.101
330	113	.416	.152	.939	.008
330	114	.431	.164	1.005	.045
330	115	.451	.166	1.019	-.022
330	116	.155	.140	.671	-.452
330	117	.394	.161	.884	.031
330	118	.416	.161	.900	.066
330	119	.456	.146	1.034	.107
330	120	.450	.148	1.044	.103
330	121	.411	.149	.950	.043
330	122	.249	.139	.752	-.096
330	123	.129	.117	.596	-.215
330	124	.069	.140	.687	-.531
330	125	.360	.147	.850	-.072
330	126	.380	.145	.905	.017
330	127	.387	.141	.893	.059
330	128	.363	.136	.903	.017

WD	TAP	CPMEAN	CPRMS	CPMAX	CPMIN
330	129	.243	.139	.910	-.150
330	130	.194	.123	.722	-.136
330	131	.030	.108	.524	-.322
330	133	.114	.144	.664	-.461
330	134	.156	.117	.636	-.233
330	135	.188	.108	.709	-.078
330	136	.198	.097	.649	-.070
330	137	.182	.095	.605	-.083
330	139	-.181	.087	.173	-.557
330	140	.034	.131	.537	-.599
330	141	.071	.081	.406	-.381
330	142	.051	.081	.309	-.429
330	143	.116	.080	.455	-.132
330	144	.157	.083	.532	-.084
330	145	.163	.087	.610	-.050
330	146	.158	.103	.628	-.182
330	147	-.174	.097	.294	-.685
330	148	.004	.107	.463	-.401
330	149	.069	.121	.632	-.337
330	150	-.006	.084	.438	-.281
330	151	.041	.070	.323	-.131
330	152	.118	.060	.433	-.102
330	153	-.399	.148	.069	-1.148
330	154	.061	.059	.336	-.228
330	155	-.126	.087	.191	-.513
330	156	-.158	.076	.093	-.440
330	157	.045	.084	.445	-.193
330	158	.146	.104	.649	-.098
330	159	-.173	.074	.104	-.566
330	160	-.144	.073	.090	-.517
330	161	-.251	.104	.083	-.787
330	162	-.463	.147	-.010	-1.036
330	163	-.656	.252	.009	-1.553
330	164	-.801	.296	.116	-2.257
330	165	-.632	.184	.129	-1.444
330	166	-.127	.103	.318	-.515
330	167	.087	.087	.564	-.155
330	168	.138	.109	.568	-.119
330	169	.013	.116	.459	-.331
330	170	-.153	.104	.288	-.763
330	171	-.057	.139	.593	-.738
330	201	-.383	.081	-.068	-.817
330	202	-.395	.123	.194	-.899
330	203	-.290	.115	.076	-.764
330	204	-.376	.158	.364	-1.205
330	205	-.431	.126	.104	-1.248
330	206	-.392	.156	.272	-1.032
330	207	-.399	.155	.031	-1.250
330	208	-.290	.107	.031	-.950
330	209	-.100	.222	.620	-.778

APPENDIX A -- PRESSURE DATA: BASS BROTHERS BUILDING - PHASE I, DALLAS, TEXAS -- CONFIGURATION A

WD	TAP	CPMEAN	CPRMS	CPMAX	CPMIN
330	210	-.151	.248	.774	-.773
330	211	-.299	.180	.536	-.814
330	212	-.412	.155	.225	-1.125
330	213	-.378	.125	-.004	-.945
330	214	-.427	.118	-.111	-1.110
330	215	-.203	.228	.506	-1.161
330	216	-.216	.254	.587	-1.008
330	217	-.213	.218	.544	-.889
330	218	-.355	.215	.254	-1.220
330	219	-.401	.169	.257	-1.150
330	220	-.382	.119	.194	-.887
330	221	-.369	.113	-.034	-.778
330	222	-.356	.134	.071	-1.025
330	223	-.218	.202	.370	-1.176
330	224	-.096	.236	.805	-.772
330	225	-.225	.214	.411	-.964
330	225	-.225	.214	.411	-.964
330	226	-.349	.237	.387	-1.256
330	227	-.405	.226	.213	-1.203
330	228	-.423	.159	.052	-1.270
330	229	-.409	.153	.005	-1.201
330	230	-.504	.110	-.203	-1.098
330	232	-.552	.258	.012	-1.902
330	233	-.156	.142	.595	-.777
330	234	-.026	.127	.571	-.536
330	235	-.046	.107	.389	-.495
330	236	-.205	.168	.194	-1.008
330	237	-.446	.220	.173	-1.697
330	239	-.534	.291	.098	-2.223
330	240	-.503	.247	.034	-1.886
330	241	-.298	.074	-.097	-.599
330	242	-.315	.076	-.122	-.705
330	243	-.257	.073	.081	-.550
330	244	-.080	.069	.233	-.570
330	245	-.163	.145	.337	-1.006
330	249	-.384	.068	-.062	-.725
330	250	-.664	.328	.150	-2.509
330	252	-.325	.080	-.050	-.647
330	253	-.359	.079	-.077	-.701
330	254	-.239	.050	-.073	-.445
330	255	-.071	.058	.177	-.631
330	256	-.386	.137	-.073	-1.188
330	257	-.478	.163	-.141	-1.238
330	258	-.494	.146	-.141	-1.191
330	259	-.183	.045	-.036	-.428
330	260	-.030	.062	.243	-.362
330	261	-.251	.059	-.050	-.605
330	262	-.353	.065	-.142	-.765
330	263	-.362	.098	-.050	-.929
330	264	-.261	.074	.104	-.596

WD	TAP	CPMEAN	CPRMS	CPMAX	CPMIN
330	265	-.257	.088	-.057	-.818
330	266	-.375	.139	-.055	-1.238
330	267	-.416	.146	-.115	-1.212
330	268	-.411	.145	-.095	-1.029
330	269	-.470	.162	-.059	-1.457
330	270	-.451	.077	-.246	-.835
330	271	-.367	.075	-.168	-.881
330	272	-.356	.129	-.033	-.938
330	273	-.492	.140	-.162	-1.085
330	280	-.397	.148	-.040	-1.174
330	301	-.514	.081	-.276	-.817
330	302	-.355	.096	-.016	-.923
330	303	-.354	.080	-.046	-.657
330	304	-.332	.075	-.064	-.641
330	305	-.325	.073	-.060	-.660
330	306	-.432	.147	.061	-1.001
330	307	-.440	.155	.057	-1.213
330	308	-.496	.101	-.190	-.948
330	309	-.370	.069	-.157	-.678
330	310	-.382	.070	-.155	-.705
330	311	-.309	.073	-.052	-.586
330	312	-.458	.092	-.160	-.804
330	313	-.329	.084	-.069	-.907
330	314	-.445	.085	-.223	-.929
330	315	-.466	.082	-.264	-.893
330	316	-.511	.085	-.298	-.897
330	317	-.355	.070	-.129	-.633
330	318	-.486	.077	-.237	-.796
330	319	-.321	.064	-.134	-.556
330	320	-.330	.067	-.141	-.584
330	321	-.320	.069	-.110	-.611
330	322	-.331	.079	-.067	-.645
330	323	-.328	.085	-.066	-.749
330	324	-.359	.080	-.119	-.771
330	325	-.353	.070	-.117	-.697
330	326	-.319	.059	-.143	-.567
330	327	-.443	.067	-.242	-.809
330	328	-.314	.067	-.073	-.589
330	329	-.332	.076	-.112	-.632
330	330	-.339	.078	-.081	-.702
330	331	-.373	.084	-.100	-.779
330	332	-.337	.062	-.022	-.575
330	333	-.331	.055	-.131	-.547
330	334	-.309	.058	-.118	-.525
330	335	-.323	.063	-.119	-.618
330	336	-.329	.071	-.073	-.665
330	337	-.333	.076	-.086	-.695
330	338	-.315	.079	-.076	-.819
330	339	-.318	.084	-.061	-.892
330	340	-.390	.115	-.087	-.977

WD	TAP	CPMEAN	CPRMS	CPMAX	CPMIN
330	341	-.347	.080	-.122	-.796
330	342	-.325	.064	-.145	-.605
330	343	-.326	.064	-.148	-.588
330	344	-.329	.068	-.139	-.721
330	345	-.340	.076	-.114	-.776
330	346	-.333	.075	-.101	-.729
330	347	-.337	.077	-.067	-.737
330	348	-.327	.084	-.043	-.924
330	349	-.387	.115	-.033	-.878
330	350	-.346	.089	-.071	-.863
330	352	-.318	.070	-.057	-.726
330	353	-.372	.087	-.134	-.724
330	354	-.373	.086	-.131	-.729
330	355	-.377	.085	-.143	-.711
330	359	-.393	.124	-.032	-1.091
330	360	-.503	.129	-.084	-1.150
330	361	-.364	.088	-.082	-.742
330	362	-.374	.100	-.055	-.839
330	363	-.380	.101	-.122	-.894
330	364	-.387	.099	-.179	-.899
330	365	-.498	.101	-.219	-1.018
330	366	-.544	.103	-.258	-.926
330	367	-.402	.099	-.180	-.803
330	368	-.487	.088	-.208	-.819
330	369	-.335	.083	-.059	-.642
330	370	-.349	.083	-.105	-.661
330	371	-.380	.101	-.136	-.959
330	372	-.372	.093	-.170	-.874
330	373	-.472	.095	-.201	-.929
330	374	-.358	.080	-.166	-.679
330	375	-.331	.077	-.050	-.607
330	376	-.582	.164	-.011	-1.528
330	377	-.551	.165	-.031	-1.538
330	378	-.625	.179	-.104	-1.471
330	379	-.495	.097	-.276	-.959
330	380	-.504	.106	-.265	-1.100
330	381	-.409	.101	-.172	-.935
330	382	-.517	.109	-.270	-1.019
330	383	-.481	.111	-.132	-1.069
330	384	-.524	.124	-.095	-1.120
330	385	-.504	.107	-.242	-.932
330	386	-.417	.104	-.130	-1.000
330	387	-.492	.109	-.196	-1.104
330	388	-.475	.087	-.239	-.928
330	389	-.408	.099	-.066	-.916
330	390	-.373	.067	-.186	-.724
330	391	-.394	.072	-.198	-.752
330	392	-.445	.085	-.227	-.918
330	393	-.450	.105	-.171	-1.103
330	401	-.598	.136	-.155	-1.210

APPENDIX A -- PRESSURE DATA: BASS BROTHERS BUILDING - PHASE I, DALLAS, TEXAS -- CONFIGURATION A

WD	TAP	CPMEAN	CPRMS	CPMAX	CPMIN
330	402	-.499	.167	-.099	-1.052
330	403	-.580	.109	-.275	-1.117
330	404	-.629	.134	-.121	-1.423
330	405	-.428	.129	-.031	-1.090
330	406	-.496	.134	.066	-1.240
330	407	-.369	.108	.026	-.844
330	408	-.599	.111	-.353	-1.368
330	409	-.608	.111	-.362	-1.378
330	410	-.636	.116	-.375	-1.458
330	411	-.589	.099	-.270	-1.138
330	412	-.637	.170	.218	-1.502
330	413	-.651	.188	.230	-1.589
330	414	-.399	.104	.097	-1.240
330	415	-.553	.121	-.030	-1.173
330	416	-.451	.106	-.197	-1.252
330	417	-.482	.115	-.177	-1.219
330	418	-.463	.112	-.073	-1.099
330	419	-.414	.109	-.072	-.970
330	420	-.414	.111	-.050	-1.094
330	421	-.638	.135	-.122	-1.499
330	422	-.635	.159	-.087	-1.497
330	423	-.666	.189	-.028	-1.698
330	424	-.399	.082	-.182	-.873
330	425	-.402	.082	-.166	-.852
330	426	-.414	.083	-.183	-.828
330	427	-.411	.082	-.208	-.805
330	428	-.440	.097	-.167	-1.077
330	429	-.597	.114	-.156	-1.171
330	430	-.465	.118	-.005	-1.037
330	431	-.467	.141	.099	-1.138
330	432	-.496	.171	.035	-1.386
330	433	-.477	.097	-.196	-1.108
330	434	-.490	.098	-.198	-1.084
330	435	-.461	.101	-.160	-1.084
330	436	-.469	.105	-.184	-1.068
330	437	-.491	.122	-.184	-1.330
330	438	-.497	.131	.066	-1.467
330	439	-.611	.141	-.113	-1.970
330	440	-.465	.143	.083	-1.105
330	441	-.482	.174	.136	-1.342
330	442	-.631	.172	.004	-1.540
330	443	-.444	.137	.080	-.989
330	444	-.451	.165	.115	-1.308
330	445	-.466	.150	.466	-1.256
330	446	-.458	.174	.377	-1.285
330	447	-.463	.156	.046	-1.571
330	449	-.623	.150	-.150	-1.497
330	450	-.528	.160	-.070	-1.623
330	451	-.682	.183	.091	-1.856
330	452	-.563	.152	-.085	-1.200
330	453	-.600	.168	.085	-1.395
330	454	-.510	.126	-.145	-1.457
330	455	-.642	.133	-.160	-1.339
330	456	-.508	.131	-.203	-1.315
330	457	-.534	.164	-.163	-1.629
330	458	-.465	.100	-.086	-1.136
330	459	-.417	.155	.483	-.946
330	460	-.337	.191	.571	-1.159
330	461	-.520	.150	-.045	-1.315
330	462	-.529	.147	-.191	-1.607
330	463	-.525	.157	-.121	-2.590
330	464	-.556	.103	-.070	-1.094
330	465	-.543	.134	.059	-1.095
330	466	-.609	.192	-.173	-1.700
330	467	-.579	.205	-.106	-2.013
330	468	-.491	.175	.112	-1.262
330	469	-.448	.139	.030	-.937
330	470	-.281	.082	-.036	-.680
330	471	-.299	.079	-.029	-.656
330	472	-.719	.202	-.074	-1.745
330	473	-.674	.244	.071	-2.315
330	474	-.409	.136	-.001	-1.239
330	475	-.385	.089	-.099	-1.125
330	476	-.470	.081	-.246	-1.096
330	477	-.536	.104	-.259	-1.227
330	478	-.457	.093	-.179	-.897
330	479	-.773	.157	-.237	-1.516
330	480	-.390	.110	-.120	-.995
330	481	-.430	.076	-.241	-.867
330	482	-.449	.101	-.218	-1.164
330	483	-.440	.091	-.230	-.864
330	484	-.407	.086	-.026	-.891
330	702	-.456	.118	-.062	-1.055
330	703	-.500	.209	.056	-2.256
330	704	-.551	.161	-.086	-1.320
330	801	-.696	.192	.055	-1.411
330	802	-.559	.118	-.105	-1.020
330	803	-.570	.130	-.176	-1.190
330	804	-.503	.113	-.054	-.995
330	805	-.463	.124	-.142	-1.153
330	806	-.400	.106	.105	-.832
330	807	-.375	.106	.073	-.789
330	808	-.380	.101	-.038	-.887
330	809	-.338	.140	.214	-1.008
330	810	-.382	.157	.128	-1.340
330	811	-.338	.115	.094	-.916
330	905	-.537	.308	.098	-2.178
330	906	-.576	.172	-.122	-1.253
330	907	-.045	.107	.449	-.440
330	908	-.590	.216	.138	-1.764
330	909	-.535	.105	-.193	-.992
330	910	-.456	.104	-.201	-1.037
330	911	-.403	.078	-.198	-.815
330	912	-.324	.071	-.107	-.700
330	913	-.413	.076	-.190	-.679
330	915	-.493	.100	-.182	-.872
340	101	.148	.130	.656	-.267
340	102	.057	.126	.467	-.418
340	103	.291	.231	1.019	-.664
340	104	.063	.212	.860	-.594
340	105	.192	.200	.936	-.516
340	106	.100	.111	.562	-.365
340	107	.141	.123	.655	-.243
340	108	.216	.156	.812	-.353
340	109	.090	.117	.553	-.303
340	110	.314	.153	.824	-.205
340	111	.274	.136	.774	-.130
340	112	.198	.092	.496	-.030
340	113	.424	.157	1.135	.010
340	114	.428	.153	.947	.007
340	115	.409	.156	.957	-.098
340	116	.324	.157	.845	-.194
340	117	.442	.153	.989	-.013
340	118	.440	.147	.989	.060
340	119	.446	.138	.971	.131
340	120	.419	.131	.847	.117
340	121	.353	.125	.797	.010
340	122	.161	.108	.569	-.191
340	123	.041	.097	.417	-.253
340	124	.217	.135	.723	-.216
340	125	.361	.133	.855	.044
340	126	.358	.130	.827	.051
340	127	.365	.129	.815	.072
340	128	.366	.131	.847	.065
340	129	.212	.136	.781	-.100
340	130	.130	.103	.505	-.176
340	131	-.054	.089	.263	-.331
340	133	.192	.114	.615	-.264
340	134	.205	.106	.593	-.110
340	135	.229	.110	.669	-.064
340	136	.212	.097	.637	-.034
340	137	.183	.096	.610	-.032
340	139	-.226	.088	.211	-.531
340	140	.106	.099	.565	-.316
340	141	.105	.066	.383	-.248
340	142	.128	.073	.418	-.202
340	143	.182	.083	.603	-.088
340	144	.189	.081	.624	-.050
340	145	.183	.083	.581	-.148
340	146	.110	.105	.635	-.165

APPENDIX A -- PRESSURE DATA: BASS BROTHERS BUILDING - PHASE I, DALLAS, TEXAS -- CONFIGURATION A

WD	TAP	CPMEAN	CPRMS	CPMAX	CPMIN
340	147	-.221	.094	.228	-.543
340	148	.048	.097	.631	-.368
340	149	.091	.108	.652	-.315
340	150	.055	.088	.412	-.205
340	151	.051	.077	.382	-.141
340	152	.117	.071	.407	-.079
340	153	-.443	.123	.014	-1.016
340	154	.048	.064	.298	-.431
340	155	-.200	.082	.117	-.567
340	156	-.046	.075	.280	-.351
340	157	.103	.094	.506	-.158
340	158	.136	.104	.516	-.101
340	159	-.242	.079	.076	-.545
340	160	-.208	.064	.102	-.662
340	161	-.322	.083	-.016	-.710
340	162	-.303	.177	.175	-.980
340	163	-.408	.266	.270	-1.593
340	164	-1.166	.315	-.166	-2.375
340	165	-.854	.189	-.240	-1.761
340	166	.004	.097	.462	-.421
340	167	.127	.090	.528	-.112
340	168	.102	.098	.706	-.145
340	169	-.090	.119	.562	-.414
340	170	-.260	.138	.168	-.841
340	171	-.124	.167	.631	-1.142
340	201	-.419	.087	-.048	-.942
340	202	-.252	.162	.336	-.796
340	203	-.339	.108	.072	-.858
340	204	-.259	.154	.259	-1.012
340	205	-.308	.189	.464	-1.148
340	206	-.198	.205	.555	-.865
340	207	-.278	.203	.480	-1.375
340	208	-.405	.139	.035	-.942
340	209	.049	.163	.588	-.710
340	210	.110	.209	.857	-.877
340	211	-.015	.190	.528	-.926
340	212	-.147	.215	.335	-.972
340	213	-.212	.163	.229	-.817
340	214	-.572	.154	-.145	-1.169
340	215	-.065	.151	.410	-.836
340	216	.091	.210	.882	-.888
340	217	.077	.206	.769	-.644
340	218	-.050	.222	.467	-.996
340	219	-.183	.236	.383	-1.230
340	220	-.278	.164	.312	-1.098
340	221	-.272	.142	.386	-.928
340	222	-.504	.169	-.029	-1.289
340	223	-.191	.123	.489	-.750
340	224	.059	.158	.666	-.704
340	225	-.007	.193	.521	-.792

WD	TAP	CPMEAN	CPRMS	CPMAX	CPMIN
340	225	-.007	.193	.521	-.792
340	226	-.021	.194	.434	-.980
340	227	-.111	.221	.327	-1.091
340	228	-.253	.185	.434	-1.108
340	229	-.253	.163	.444	-1.061
340	230	-.585	.118	-.274	-1.217
340	232	-.229	.194	.192	-1.306
340	233	-.213	.110	.201	-.842
340	234	-.069	.126	.497	-.525
340	235	-.025	.092	.319	-.371
340	236	-.058	.119	.231	-.764
340	237	-.187	.155	.175	-1.062
340	239	-.227	.221	.299	-1.586
340	240	-.276	.222	.309	-1.517
340	241	-.361	.073	-.155	-.704
340	242	-.396	.079	-.144	-.691
340	243	-.294	.068	-.077	-.611
340	244	-.066	.065	.132	-.431
340	245	-.064	.114	.200	-.747
340	249	-.441	.073	-.195	-.811
340	250	-.309	.262	.199	-1.851
340	252	-.405	.085	-.090	-.858
340	253	-.446	.077	-.201	-.781
340	254	-.275	.049	-.057	-.479
340	255	-.026	.055	.229	-.371
340	256	-.230	.095	.138	-.725
340	257	-.307	.111	-.050	-.961
340	258	-.393	.153	.167	-1.139
340	259	-.196	.044	-.060	-.406
340	260	.015	.063	.333	-.205
340	261	-.270	.076	.014	-.583
340	262	-.387	.062	-.158	-.626
340	263	-.492	.125	-.118	-1.055
340	264	-.237	.067	.002	-.543
340	265	-.186	.054	.001	-.462
340	266	-.224	.130	.088	-.865
340	267	-.271	.125	.021	-.886
340	268	-.251	.118	.004	-.809
340	269	-.336	.178	.180	-1.337
340	270	-.583	.083	-.359	-.931
340	271	-.370	.061	-.193	-.647
340	272	-.229	.112	.136	-.790
340	273	-.448	.184	.071	-1.185
340	280	-.255	.112	.054	-.873
340	301	-.570	.080	-.323	-.869
340	302	-.421	.105	-.090	-1.065
340	303	-.400	.085	-.140	-.826
340	304	-.361	.081	-.070	-.784
340	305	-.339	.084	.129	-.727
340	306	-.389	.134	.075	-1.017

WD	TAP	CPMEAN	CPRMS	CPMAX	CPMIN
340	307	-.392	.127	.028	-.933
340	308	-.525	.089	-.249	-.995
340	309	-.410	.069	-.191	-.687
340	310	-.422	.080	-.181	-.833
340	311	-.345	.066	-.132	-.607
340	312	-.501	.079	-.229	-.812
340	313	-.380	.085	-.142	-.893
340	314	-.504	.092	-.191	-1.172
340	315	-.516	.088	-.200	-1.030
340	316	-.545	.088	-.165	-.953
340	317	-.399	.063	-.189	-.730
340	318	-.537	.072	-.286	-.820
340	319	-.357	.062	-.091	-.665
340	320	-.364	.065	-.154	-.704
340	321	-.357	.063	-.148	-.607
340	322	-.378	.069	-.088	-.628
340	323	-.362	.071	-.128	-.660
340	324	-.396	.073	-.073	-.722
340	325	-.406	.069	-.220	-.730
340	326	-.370	.057	-.191	-.596
340	327	-.498	.063	-.311	-.754
340	328	-.362	.059	-.181	-.580
340	329	-.382	.067	-.180	-.646
340	330	-.389	.067	-.182	-.645
340	331	-.409	.077	-.157	-.761
340	332	-.401	.066	-.206	-.699
340	333	-.392	.058	-.206	-.741
340	334	-.370	.057	-.175	-.616
340	335	-.383	.060	-.202	-.640
340	336	-.386	.064	-.190	-.669
340	337	-.388	.066	-.177	-.680
340	338	-.368	.065	-.142	-.649
340	339	-.367	.068	-.118	-.671
340	340	-.452	.094	-.154	-.899
340	341	-.426	.076	-.130	-.771
340	342	-.413	.068	-.229	-.754
340	343	-.412	.067	-.185	-.708
340	344	-.408	.070	-.216	-.841
340	345	-.414	.072	-.209	-.785
340	346	-.406	.069	-.229	-.667
340	347	-.412	.071	-.220	-.881
340	348	-.408	.075	-.156	-.829
340	349	-.461	.098	-.138	-.981
340	350	-.431	.085	-.174	-.830
340	352	-.388	.070	-.131	-.653
340	353	-.454	.081	-.233	-.785
340	354	-.455	.079	-.242	-.800
340	355	-.461	.079	-.239	-.864
340	359	-.458	.109	-.110	-1.023
340	360	-.570	.109	-.084	-1.046

APPENDIX A -- PRESSURE DATA: BASS BROTHERS BUILDING - PHASE I, DALLAS, TEXAS -- CONFIGURATION A

WD	TAP	CPMEAN	CPRMS	CPMAX	CPMIN
340	361	-.474	.090	-.258	-.928
340	362	-.473	.093	-.190	-.903
340	363	-.470	.092	-.262	-.889
340	364	-.478	.088	-.260	-.888
340	365	-.591	.092	-.342	-1.042
340	366	-.634	.100	-.389	-1.064
340	367	-.490	.094	-.253	-.965
340	368	-.604	.081	-.306	-.946
340	369	-.439	.079	-.094	-.698
340	370	-.449	.073	-.229	-.716
340	371	-.489	.100	-.269	-.915
340	372	-.479	.090	-.278	-.863
340	373	-.573	.087	-.325	-1.046
340	374	-.464	.071	-.192	-.800
340	375	-.438	.067	-.223	-.684
340	376	-.741	.186	-.217	-1.621
340	377	-.701	.185	-.011	-1.758
340	378	-.769	.180	-.239	-1.867
340	379	-.615	.099	-.293	-1.052
340	380	-.611	.098	-.337	-1.117
340	381	-.495	.098	-.280	-.982
340	382	-.631	.104	-.384	-1.263
340	383	-.618	.132	-.250	-1.278
340	384	-.648	.124	-.266	-1.347
340	385	-.609	.097	-.356	-.991
340	386	-.477	.144	-.079	-1.153
340	387	-.573	.099	-.318	-1.282
340	388	-.529	.095	-.276	-1.203
340	389	-.516	.136	-.076	-1.200
340	390	-.497	.082	-.269	-.883
340	391	-.527	.089	-.283	-.944
340	392	-.605	.116	-.298	-1.144
340	393	-.601	.136	-.320	-1.475
340	401	-.626	.119	-.252	-1.155
340	402	-.560	.128	-.150	-1.050
340	403	-.551	.084	-.295	-1.520
340	404	-.599	.101	-.320	-1.496
340	405	-.431	.103	-.078	-1.200
340	406	-.562	.115	-.108	-1.619
340	407	-.426	.103	-.028	-.961
340	408	-.567	.072	-.323	-.941
340	409	-.571	.072	-.341	-.961
340	410	-.599	.074	-.361	-1.027
340	411	-.564	.069	-.346	-1.050
340	412	-.638	.111	-.274	-1.682
340	413	-.676	.127	-.148	-1.560
340	414	-.441	.086	-.081	-.935
340	415	-.619	.111	-.218	-1.210
340	416	-.412	.059	-.228	-.734
340	417	-.436	.067	-.247	-.807
340	418	-.450	.072	-.240	-.814
340	419	-.435	.075	-.177	-.921
340	420	-.434	.079	-.200	-.876
340	421	-.636	.100	-.263	-1.531
340	422	-.623	.111	-.225	-1.650
340	423	-.662	.129	-.219	-1.753
340	424	-.410	.062	-.190	-.685
340	425	-.415	.061	-.199	-.694
340	426	-.427	.062	-.196	-.706
340	427	-.413	.061	-.230	-.670
340	428	-.436	.067	-.262	-.814
340	429	-.604	.080	-.358	-.993
340	430	-.479	.084	-.260	-.970
340	431	-.487	.103	-.075	-1.068
340	432	-.515	.127	-.099	-1.144
340	433	-.501	.084	-.242	-.857
340	434	-.515	.084	-.284	-.892
340	435	-.494	.080	-.265	-.850
340	436	-.501	.082	-.274	-.891
340	437	-.523	.092	-.208	-1.066
340	438	-.544	.099	.044	-1.029
340	439	-.657	.106	-.355	-1.113
340	440	-.539	.119	-.138	-1.017
340	441	-.560	.142	-.114	-1.314
340	442	-.702	.124	-.207	-1.238
340	443	-.545	.119	-.100	-1.166
340	444	-.576	.152	-.013	-1.307
340	445	-.550	.100	-.253	-1.018
340	446	-.551	.109	-.030	-1.239
340	447	-.561	.123	-.017	-1.273
340	449	-.614	.087	-.393	-1.026
340	450	-.513	.083	-.290	-.968
340	451	-.618	.091	-.392	-1.081
340	452	-.666	.120	-.250	-1.273
340	453	-.707	.149	-.229	-1.501
340	454	-.518	.080	-.296	-.882
340	455	-.670	.091	-.432	-1.299
340	456	-.519	.086	-.285	-1.044
340	457	-.512	.087	-.295	-1.051
340	458	-.509	.084	-.280	-.948
340	459	-.541	.105	-.167	-1.056
340	460	-.514	.114	.097	-1.323
340	461	-.650	.121	-.240	-1.371
340	462	-.528	.091	-.278	-1.012
340	463	-.527	.099	-.280	-1.043
340	464	-.634	.081	-.382	-1.035
340	465	-.623	.101	-.363	-1.165
340	466	-.610	.135	-.253	-1.316
340	467	-.603	.151	-.259	-1.702
340	468	-.576	.124	-.214	-1.100
340	469	-.596	.096	-.290	-1.238
340	470	-.415	.091	-.152	-.846
340	471	-.399	.090	-.039	-.818
340	472	-.747	.158	-.244	-1.968
340	473	-.786	.189	-.131	-1.810
340	474	-.580	.157	-.113	-1.532
340	475	-.523	.128	-.177	-1.214
340	476	-.608	.100	-.327	-1.249
340	477	-.665	.117	-.276	-1.257
340	478	-.594	.108	-.264	-1.087
340	479	-.930	.170	-.471	-1.717
340	480	-.593	.158	-.271	-1.279
340	481	-.568	.105	-.335	-1.095
340	482	-.572	.106	-.313	-1.174
340	483	-.558	.094	-.282	-1.214
340	484	-.461	.106	-.038	-.905
340	702	-.502	.082	-.295	-.953
340	703	-.524	.106	-.203	-1.343
340	704	-.672	.129	-.217	-1.564
340	801	-.581	.161	-.032	-1.224
340	802	-.582	.114	-.127	-1.097
340	803	-.664	.152	-.202	-1.483
340	804	-.586	.135	-.202	-1.277
340	805	-.559	.165	-.123	-1.397
340	806	-.441	.098	.075	-.896
340	807	-.251	.146	.257	-.734
340	808	-.421	.100	-.107	-.902
340	809	-.411	.114	.198	-.905
340	810	-.369	.130	.075	-1.354
340	811	-.375	.091	-.004	-.748
340	905	-.227	.208	.242	-1.373
340	906	-.800	.198	-.306	-1.963
340	907	.057	.097	.543	-.310
340	908	-.917	.256	-.081	-2.215
340	909	-.604	.084	-.349	-.970
340	910	-.567	.105	-.206	-1.041
340	911	-.576	.132	-.311	-1.474
340	912	-.433	.086	-.187	-.825
340	913	-.522	.088	-.308	-.982
340	915	-.591	.123	-.074	-1.174
350	101	.195	.142	.728	-.223
350	102	-.021	.121	.503	-.401
350	103	.359	.184	.969	-.247
350	104	.233	.193	.845	-.422
350	105	.277	.233	1.105	-.559
350	106	.110	.115	.659	-.236
350	107	.166	.131	.604	-.198
350	108	.213	.162	.730	-.815
350	109	.049	.116	.486	-.337
350	110	.415	.162	.912	-.087

APPENDIX A -- PRESSURE DATA: BASS BROTHERS BUILDING - PHASE I, DALLAS, TEXAS -- CONFIGURATION A

WD	TAP	CPMEAN	CPRMS	CPMAX	CPMIN
350	111	.220	.132	.687	-.316
350	112	.212	.087	.471	-.050
350	113	.419	.151	.920	-.103
350	114	.405	.141	.898	-.007
350	115	.351	.135	.857	-.109
350	116	.437	.149	.957	-.009
350	117	.404	.153	.868	-.084
350	118	.412	.144	.842	-.070
350	119	.458	.152	1.004	.102
350	120	.399	.139	.912	.067
350	121	.298	.129	.744	-.009
350	122	.063	.101	.434	-.188
350	123	-.060	.082	.251	-.304
350	124	.356	.148	1.036	-.075
350	125	.349	.150	.820	-.115
350	126	.347	.145	.831	-.142
350	127	.369	.147	.826	-.231
350	128	.280	.117	.820	.014
350	129	.144	.113	.595	-.119
350	130	.014	.087	.397	-.227
350	131	-.165	.076	.210	-.457
350	133	.158	.102	.562	-.161
350	134	.170	.100	.583	-.138
350	135	.209	.111	.751	-.137
350	136	.180	.090	.693	-.101
350	137	.138	.087	.635	-.120
350	139	-.300	.083	.062	-.567
350	140	.149	.086	.537	-.177
350	141	.107	.068	.388	-.142
350	142	.133	.072	.466	-.129
350	143	.184	.087	.573	-.027
350	144	.146	.078	.530	-.122
350	145	.123	.080	.524	-.086
350	146	.029	.094	.448	-.264
350	147	-.297	.085	.058	-.563
350	148	.083	.092	.581	-.213
350	149	.096	.086	.568	-.182
350	150	.078	.085	.561	-.163
350	151	.041	.077	.407	-.178
350	152	.101	.065	.407	-.094
350	153	-.478	.111	-.192	-1.054
350	154	.032	.059	.327	-.227
350	155	-.280	.070	.032	-.672
350	156	.039	.087	.481	-.181
350	157	.098	.089	.478	-.115
350	158	.101	.099	.500	-.126
350	159	-.308	.076	-.033	-.606
350	160	-.239	.065	-.019	-.542
350	161	-.380	.064	-.153	-.820
350	162	-.054	.146	.468	-.638
350	163	-.079	.192	.466	-.874
350	164	-1.300	.319	-.460	-2.594
350	165	-.982	.184	-.486	-1.683
350	166	.070	.087	.475	-.188
350	167	.101	.084	.497	-.100
350	168	.016	.093	.384	-.222
350	169	-.213	.093	.274	-.532
350	170	-.455	.186	.116	-1.110
350	171	-.348	.249	.486	-1.249
350	201	-.483	.085	-.201	-.890
350	202	-.153	.095	.136	-.574
350	203	-.454	.094	-.032	-.845
350	204	-.255	.070	.102	-.629
350	205	-.066	.202	.579	-.892
350	206	.156	.235	.749	-.621
350	207	.015	.193	.618	-.975
350	208	-.550	.143	-.143	-1.123
350	209	.009	.092	.391	-.364
350	210	.137	.120	.613	-.364
350	211	.129	.118	.583	-.448
350	212	.086	.096	.371	-.591
350	213	-.008	.091	.256	-.624
350	214	-.766	.151	-.342	-1.342
350	215	-.065	.092	.310	-.399
350	216	.200	.120	.614	-.280
350	217	.295	.141	.842	-.281
350	218	.207	.118	.528	-.419
350	219	.182	.121	.545	-.469
350	220	.051	.237	.672	-1.079
350	221	-.009	.210	.778	-.788
350	222	-.701	.165	-.113	-1.422
350	223	-.189	.087	.164	-.503
350	224	.137	.108	.560	-.386
350	225	.182	.134	.680	-.440
350	225	.182	.134	.680	-.440
350	226	.153	.107	.575	-.489
350	227	.130	.127	.469	-.584
350	228	.024	.219	.575	-1.284
350	229	-.011	.210	.675	-.964
350	230	-.680	.156	-.324	-1.422
350	232	-.047	.125	.325	-.799
350	233	-.236	.083	.159	-.553
350	234	-.064	.083	.249	-.510
350	235	.015	.076	.392	-.291
350	236	.076	.078	.361	-.304
350	237	-.044	.097	.286	-.594
350	239	.029	.160	.545	-1.194
350	240	.019	.179	.602	-.759
350	241	-.398	.083	-.141	-.854
350	242	-.449	.096	-.177	-.917
350	243	-.313	.071	.008	-.606
350	244	-.014	.056	.209	-.231
350	245	.070	.074	.354	-.311
350	249	-.455	.071	-.153	-.718
350	250	-.023	.129	.321	-1.082
350	252	-.457	.083	-.189	-.880
350	253	-.499	.082	-.116	-.820
350	254	-.293	.058	-.078	-.542
350	255	.035	.064	.313	-.149
350	256	-.088	.093	.273	-.385
350	257	-.189	.084	.159	-.620
350	258	-.206	.168	.306	-.829
350	259	-.203	.050	-.058	-.439
350	260	.068	.073	.435	-.130
350	261	-.283	.096	.079	-.651
350	262	-.415	.071	-.186	-.755
350	263	-.571	.143	-.050	-1.151
350	264	-.223	.065	.068	-.467
350	265	-.142	.052	.090	-.335
350	266	-.068	.088	.310	-.654
350	267	-.116	.084	.205	-.673
350	268	-.115	.082	.139	-.559
350	269	-.142	.137	.202	-.918
350	270	-.676	.091	-.448	-1.087
350	271	-.374	.062	-.119	-.678
350	272	-.094	.068	.275	-.468
350	273	-.178	.163	.308	-.750
350	280	-.118	.075	.149	-.542
350	301	-.629	.086	-.347	-1.015
350	302	-.481	.116	-.110	-1.034
350	303	-.446	.097	-.148	-.877
350	304	-.409	.090	-.078	-.829
350	305	-.410	.099	.025	-.894
350	306	-.404	.100	-.065	-.813
350	307	-.465	.111	-.069	-.923
350	308	-.584	.082	-.310	-1.011
350	309	-.480	.072	-.285	-.822
350	310	-.485	.070	-.280	-.811
350	311	-.409	.067	-.200	-.684
350	312	-.555	.076	-.322	-.908
350	313	-.429	.089	-.098	-1.095
350	314	-.547	.092	-.216	-1.115
350	315	-.565	.086	-.208	-1.046
350	316	-.607	.082	-.313	-1.060
350	317	-.449	.065	-.257	-.750
350	318	-.573	.069	-.325	-.830
350	319	-.419	.064	-.206	-.681
350	320	-.432	.065	-.243	-.713
350	321	-.422	.060	-.242	-.673
350	322	-.445	.067	-.254	-.776

APPENDIX A -- PRESSURE DATA: BASS BROTHERS BUILDING - PHASE I, DALLAS, TEXAS -- CONFIGURATION A

WD	TAP	CPMEAN	CPRMS	CPMAX	CPMIN
350	323	-.411	.064	-.216	-.677
350	324	-.447	.071	-.235	-.758
350	325	-.461	.069	-.261	-.797
350	326	-.432	.059	-.255	-.654
350	327	-.554	.065	-.344	-.861
350	328	-.426	.060	-.185	-.706
350	329	-.450	.067	-.238	-.783
350	330	-.455	.067	-.259	-.776
350	331	-.462	.077	-.171	-.821
350	332	-.465	.072	-.242	-.927
350	333	-.452	.061	-.273	-.816
350	334	-.434	.061	-.241	-.700
350	335	-.446	.061	-.254	-.675
350	336	-.448	.065	-.256	-.703
350	337	-.449	.067	-.210	-.705
350	338	-.428	.069	-.250	-.702
350	339	-.429	.073	-.245	-.790
350	340	-.512	.091	-.193	-1.043
350	341	-.507	.085	-.264	-1.033
350	342	-.488	.071	-.297	-.921
350	343	-.482	.071	-.259	-.830
350	344	-.487	.075	-.273	-.794
350	345	-.490	.077	-.283	-.883
350	346	-.480	.073	-.260	-.769
350	347	-.483	.075	-.235	-.799
350	348	-.463	.079	-.206	-.854
350	349	-.509	.102	-.171	-.974
350	350	-.514	.098	-.171	-.989
350	352	-.467	.081	-.202	-.833
350	353	-.527	.089	-.274	-.895
350	354	-.528	.087	-.272	-.916
350	355	-.533	.087	-.268	-.881
350	359	-.505	.129	-.106	-1.093
350	360	-.649	.117	-.162	-1.173
350	361	-.580	.109	-.254	-1.174
350	362	-.565	.108	-.268	-1.057
350	363	-.566	.107	-.298	-1.107
350	364	-.579	.104	-.320	-1.119
350	365	-.673	.096	-.440	-1.372
350	366	-.718	.103	-.470	-1.124
350	367	-.578	.103	-.329	-1.049
350	368	-.676	.088	-.365	-1.300
350	369	-.538	.090	-.197	-.910
350	370	-.531	.080	-.273	-.869
350	371	-.570	.113	-.275	-1.388
350	372	-.554	.100	-.315	-1.109
350	373	-.652	.097	-.430	-1.324
350	374	-.547	.080	-.325	-.927
350	375	-.517	.077	-.285	-.827
350	376	-.776	.203	-.023	-1.829

WD	TAP	CPMEAN	CPRMS	CPMAX	CPMIN
350	377	-.765	.194	-.102	-1.810
350	378	-.808	.158	-.362	-1.930
350	379	-.701	.106	-.322	-1.142
350	380	-.704	.114	-.441	-1.259
350	381	-.577	.102	-.332	-1.100
350	382	-.721	.113	-.449	-1.207
350	383	-.698	.128	-.171	-1.348
350	384	-.739	.138	-.424	-1.636
350	385	-.743	.123	-.441	-1.504
350	386	-.547	.178	-.028	-1.376
350	387	-.669	.112	-.381	-1.392
350	388	-.555	.102	-.279	-1.108
350	389	-.636	.169	-.170	-1.585
350	390	-.610	.097	-.354	-1.064
350	391	-.641	.102	-.391	-1.124
350	392	-.755	.133	-.412	-1.350
350	393	-.808	.195	-.354	-1.724
350	401	-.585	.123	-.114	-1.117
350	402	-.575	.099	-.257	-1.004
350	403	-.581	.075	-.373	-1.009
350	404	-.615	.081	-.365	-.925
350	405	-.469	.084	-.248	-1.125
350	406	-.602	.108	-.287	-1.259
350	407	-.478	.101	-.189	-1.027
350	408	-.590	.069	-.396	-.854
350	409	-.595	.068	-.384	-.853
350	410	-.619	.069	-.424	-.896
350	411	-.590	.060	-.436	-.868
350	412	-.662	.093	-.407	-1.128
350	413	-.702	.111	-.423	-1.306
350	414	-.488	.091	-.238	-.945
350	415	-.667	.112	-.337	-1.258
350	416	-.443	.054	-.266	-.663
350	417	-.465	.058	-.278	-.689
350	418	-.481	.064	-.281	-.822
350	419	-.474	.074	-.278	-.985
350	420	-.465	.073	-.271	-.831
350	421	-.683	.086	-.454	-1.142
350	422	-.672	.089	-.428	-1.090
350	423	-.712	.105	-.437	-1.427
350	424	-.456	.062	-.269	-.706
350	425	-.462	.061	-.281	-.783
350	426	-.474	.062	-.278	-.783
350	427	-.456	.060	-.262	-.695
350	428	-.478	.064	-.283	-.780
350	429	-.645	.074	-.420	-.976
350	430	-.518	.074	-.313	-.830
350	431	-.510	.085	-.312	-.993
350	432	-.529	.104	-.283	-1.160
350	433	-.535	.075	-.302	-.829

WD	TAP	CPMEAN	CPRMS	CPMAX	CPMIN
350	434	-.549	.076	-.318	-.851
350	435	-.544	.083	-.329	-.880
350	436	-.552	.085	-.345	-.912
350	437	-.579	.096	-.354	-1.067
350	438	-.600	.106	-.365	-1.370
350	439	-.707	.108	-.456	-1.348
350	440	-.588	.118	-.289	-1.237
350	441	-.608	.140	-.240	-1.256
350	442	-.778	.118	-.453	-1.357
350	443	-.605	.116	-.242	-1.302
350	444	-.616	.137	-.206	-1.434
350	445	-.597	.095	-.313	-1.105
350	446	-.599	.101	-.284	-1.116
350	447	-.615	.115	-.234	-1.304
350	449	-.672	.084	-.440	-.978
350	450	-.562	.078	-.349	-.873
350	451	-.660	.080	-.462	-1.021
350	452	-.745	.113	-.409	-1.249
350	453	-.786	.157	-.323	-1.640
350	454	-.570	.082	-.337	-.865
350	455	-.707	.092	-.490	-1.250
350	456	-.561	.080	-.356	-.952
350	457	-.566	.082	-.348	-.925
350	458	-.553	.079	-.364	-.910
350	459	-.598	.103	-.327	-1.138
350	460	-.577	.110	-.280	-1.198
350	461	-.706	.121	-.345	-1.626
350	462	-.577	.089	-.342	-.942
350	463	-.559	.089	-.315	-1.026
350	464	-.679	.086	-.428	-1.204
350	465	-.677	.095	-.431	-1.143
350	466	-.629	.124	-.341	-1.342
350	467	-.617	.135	-.313	-1.395
350	468	-.591	.113	-.279	-1.290
350	469	-.670	.099	-.293	-1.070
350	470	-.486	.095	-.143	-.857
350	471	-.428	.113	.037	-.971
350	472	-.773	.143	-.395	-1.500
350	473	-.820	.188	-.411	-2.284
350	474	-.719	.159	-.305	-1.474
350	475	-.692	.148	-.346	-1.425
350	476	-.718	.118	-.394	-1.247
350	477	-.771	.134	-.355	-1.358
350	478	-.702	.112	-.314	-1.150
350	479	-.946	.170	-.475	-1.737
350	480	-.757	.154	-.352	-1.369
350	481	-.710	.127	-.421	-1.462
350	482	-.674	.104	-.410	-1.210
350	483	-.661	.099	-.406	-1.132
350	484	-.508	.125	-.117	-1.057

APPENDIX A -- PRESSURE DATA: BASS BROTHERS BUILDING - PHASE I, DALLAS, TEXAS -- CONFIGURATION A

WD	TAP	CPMEAN	CPRMS	CPMAX	CPMIN	WD	TAP	CPMEAN	CPRMS	CPMAX	CPMIN	WD	TAP	CPMEAN	CPRMS	CPMAX	CPMIN
350	702	-.546	.078	-.332	-.940	350	806	-.467	.094	.077	-.979	350	907	.086	.086	.488	-.126
350	703	-.574	.093	-.302	-1.192	350	807	-.128	.121	.262	-.619	350	908	-1.056	.233	-.317	-2.074
350	704	-.728	.131	-.370	-1.558	350	808	-.471	.106	-.136	-.966	350	909	-.646	.081	-.440	-1.095
350	801	-.559	.116	-.094	-.997	350	809	-.504	.108	-.193	-.998	350	910	-.682	.121	-.328	-1.318
350	802	-.514	.118	-.073	-1.037	350	810	-.333	.069	-.106	-.711	350	911	-.720	.135	-.392	-1.330
350	803	-.809	.163	-.290	-1.655	350	811	-.384	.094	.012	-.747	350	912	-.538	.107	-.273	-1.061
350	804	-.649	.145	-.260	-1.377	350	905	-.031	.109	.270	-.713	350	913	-.631	.102	-.359	-1.170
350	805	-.928	.268	-.210	-1.892	350	906	-.912	.167	-.428	-1.584	350	915	-.654	.146	.127	-1.276

APPENDIX A -- PRESSURE DATA: BASS BROTHERS BUILDING - PHASE II, DALLAS

WD	TAP	CPMEAN	CPRMS	CPMAX	CPMIN
0	101	-.027	.143	.693	-.434
0	102	.365	.174	1.088	-.177
0	103	.073	.162	.676	-.488
0	104	.048	.127	.563	-.341
0	105	-.083	.108	.335	-.459
0	106	-.291	.120	.127	-.780
0	107	-.301	.121	.139	-.805
0	108	-.106	.124	.313	-.493
0	109	-.189	.108	.255	-.622
0	110	-.212	.121	.287	-.738
0	111	.264	.162	.973	-.239
0	112	.011	.131	.480	-.457
0	113	.417	.178	1.033	-.141
0	114	.300	.178	.850	-.298
0	115	.222	.190	.810	-.647
0	116	.057	.129	.475	-.485
0	117	.450	.166	.952	-.060
0	118	.423	.169	.941	-.106
0	119	.336	.159	.887	-.164
0	120	.282	.152	.827	-.203
0	121	.307	.165	.866	-.213
0	122	-.151	.135	.309	-.578
0	123	.175	.166	.667	-.540
0	124	.399	.170	.961	-.106
0	125	.355	.157	.861	-.107
0	126	.406	.135	.892	.029
0	127	.411	.169	1.244	-.131
0	128	.382	.166	1.194	-.147
0	129	.077	.183	.689	-.691
0	130	.100	.137	.580	-.421
0	131	.370	.179	.974	-.226
0	132	.435	.164	.997	-.055
0	133	.423	.151	.969	-.018
0	134	.449	.162	.976	-.013
0	135	.408	.147	.871	-.009
0	136	.335	.147	.797	-.102
0	137	.262	.143	.760	-.154
0	138	.116	.131	.570	-.285
0	139	-.033	.109	.355	-.389
0	140	.316	.185	1.045	-.332
0	141	.384	.168	1.052	-.161
0	142	.391	.166	1.038	-.123
0	143	.372	.150	.935	-.019
0	144	.368	.141	1.084	-.053
0	145	.302	.138	.993	-.094
0	146	.232	.130	.829	-.145
0	147	.090	.120	.573	-.284
0	148	-.022	.117	.365	-.375
0	149	.254	.169	.818	-.314
0	150	.338	.145	.895	-.120

WD	TAP	CPMEAN	CPRMS	CPMAX	CPMIN
0	151	.372	.127	.788	-.034
0	152	.401	.145	.999	-.065
0	153	.255	.140	.781	-.159
0	154	.227	.136	.736	-.162
0	155	.212	.137	.710	-.172
0	156	.263	.157	.893	-.219
0	157	.304	.152	1.002	-.190
0	158	.395	.143	.888	.014
0	159	.387	.146	.902	-.007
0	160	.325	.126	.877	-.037
0	161	.272	.131	.898	-.111
0	162	.198	.127	.725	-.171
0	163	.086	.125	.630	-.286
0	164	-.056	.113	.326	-.398
0	165	.244	.145	.819	-.200
0	166	.228	.134	.750	-.194
0	167	.223	.121	.692	-.147
0	168	.212	.106	.763	-.109
0	169	.168	.115	.753	-.199
0	170	.031	.116	.584	-.368
0	171	-.068	.117	.368	-.489
0	172	-.041	.096	.390	-.367
0	173	-.085	.108	.390	-.455
0	174	.247	.142	.959	-.288
0	176	-.561	.180	-.065	-1.229
0	177	.095	.140	.644	-.449
0	178	.249	.135	.776	-.195
0	179	.318	.149	.900	-.149
0	180	.006	.144	.659	-.426
0	181	-.397	.206	.254	-1.158
0	182	-.004	.176	.430	-1.129
0	183	-.067	.180	.492	-1.099
0	184	-.102	.108	.323	-.531
0	185	-.104	.117	.315	-.514
0	186	.080	.102	.427	-.259
0	187	.105	.096	.426	-.259
0	188	.124	.086	.420	-.217
0	189	.149	.113	.570	-.295
0	190	.060	.132	.524	-.487
0	191	.032	.113	.389	-.404
0	192	.110	.101	.484	-.421
0	193	.142	.096	.515	-.215
0	194	.128	.105	.562	-.240
0	195	.145	.117	.696	-.197
0	196	.193	.114	.668	-.133
0	197	.017	.122	.410	-.404
0	198	-.208	.121	.309	-.632
0	201	-.236	.128	.178	-.747
0	202	-.229	.131	.203	-.762
0	203	-.137	.137	.357	-.585

WD	TAP	CPMEAN	CPRMS	CPMAX	CPMIN
0	204	-.049	.136	.438	-.504
0	205	-.075	.131	.401	-.656
0	206	-.005	.134	.434	-.613
0	207	-.080	.214	.580	-.678
0	208	-.320	.138	.173	-.804
0	209	.004	.143	.480	-.618
0	210	.074	.155	.652	-.566
0	211	.225	.180	.856	-.693
0	212	-.135	.133	.297	-.803
0	213	-.133	.143	.345	-.887
0	214	-.165	.148	.341	-.939
0	215	.213	.218	.859	-.462
0	216	.246	.153	.718	-.315
0	217	.126	.160	.642	-.550
0	218	-.020	.146	.521	-.557
0	219	.337	.191	.937	-.710
0	220	.258	.197	.931	-.557
0	221	-.195	.160	.302	-.790
0	222	-.212	.177	.310	-.972
0	223	-.343	.223	.448	-1.238
0	224	-.352	.133	.081	-1.024
0	225	.002	.115	.352	-.442
0	226	.173	.147	.625	-.517
0	227	.236	.165	.741	-.500
0	228	.146	.159	.600	-.336
0	229	.098	.176	.633	-.639
0	230	.068	.219	.705	-.687
0	231	-.030	.229	.600	-.904
0	232	-.067	.201	.561	-.833
0	233	-.381	.128	.035	-.920
0	234	-.012	.128	.425	-.503
0	235	.131	.144	.554	-.502
0	236	.183	.161	.706	-.534
0	237	.115	.145	.518	-.582
0	238	.065	.186	.565	-.657
0	239	.003	.178	.515	-.628
0	240	-.043	.218	.635	-.707
0	241	-.074	.178	.567	-.612
0	242	.002	.204	.600	-.640
0	243	-.059	.200	.609	-.643
0	244	-.090	.190	.630	-.636
0	245	.023	.188	.535	-.856
0	247	-.010	.190	.550	-.785
0	248	-.382	.116	-.007	-.827
0	249	-.114	.110	.256	-.621
0	250	.093	.142	.586	-.505
0	251	.075	.170	.620	-.858
0	252	.056	.149	.477	-.478
0	253	-.022	.153	.537	-.618
0	254	.013	.201	.693	-.916

APPENDIX A -- PRESSURE DATA: BASS BROTHERS BUILDING - PHASE II, DALLAS

WD	TAP	CPMEAN	CPRMS	CPMAX	CPMIN
0	255	-.068	.198	.701	-.848
0	256	-.106	.194	.706	-.926
0	257	-.108	.184	.592	-.868
0	258	-.420	.132	.047	-.934
0	259	-.062	.102	.276	-.492
0	260	.051	.132	.520	-.585
0	261	.069	.159	.582	-.646
0	262	.027	.155	.514	-.698
0	263	.005	.136	.492	-.783
0	264	-.075	.176	.598	-.934
0	265	-.146	.177	.629	-.913
0	266	-.379	.121	.037	-1.114
0	267	-.157	.098	.363	-.530
0	268	.085	.133	.628	-.424
0	269	-.030	.152	.492	-.588
0	270	-.028	.156	.639	-.650
0	271	-.170	.103	.172	-.538
0	272	-.123	.137	.321	-.917
0	273	-.269	.112	.123	-.698
0	274	-.098	.104	.270	-.449
0	275	.002	.105	.333	-.315
0	276	-.056	.130	.342	-.418
0	277	.009	.112	.386	-.367
0	278	-.404	.153	.006	-1.133
0	279	-.144	.090	.260	-.424
0	280	.038	.116	.488	-.339
0	281	-.051	.143	.394	-.574
0	301	-.231	.107	.082	-.547
0	302	-.221	.110	.142	-.545
0	303	-.291	.122	.097	-.826
0	304	-.303	.106	.042	-.866
0	305	-.268	.114	.099	-.806
0	306	-.225	.111	.162	-.713
0	307	-.187	.092	.125	-.475
0	308	-.193	.104	.157	-.568
0	309	-.197	.106	.161	-.589
0	310	-.239	.120	.112	-.784
0	311	-.222	.095	.055	-.608
0	312	-.214	.105	.104	-.592
0	313	-.192	.097	.107	-.558
0	314	-.210	.097	.086	-.570
0	315	-.185	.089	.091	-.517
0	316	-.208	.102	.156	-.635
0	317	-.229	.105	.113	-.654
0	318	-.237	.103	.081	-.639
0	319	-.208	.083	.061	-.486
0	320	-.204	.094	.098	-.528
0	321	-.219	.100	.148	-.567
0	322	-.212	.100	.094	-.597
0	323	-.217	.100	.095	-.598

WD	TAP	CPMEAN	CPRMS	CPMAX	CPMIN
0	324	-.263	.093	.032	-.573
0	325	-.260	.105	.075	-.657
0	326	-.258	.104	.079	-.637
0	327	-.263	.104	.081	-.638
0	328	-.264	.087	-.004	-.556
0	329	-.248	.099	.047	-.570
0	330	-.283	.107	.033	-.631
0	331	-.264	.107	.052	-.635
0	332	-.400	.105	.034	-.727
0	333	-.284	.101	.068	-.657
0	334	-.273	.101	.086	-.651
0	335	-.278	.101	.066	-.681
0	336	-.281	.087	.016	-.658
0	337	-.326	.101	.020	-.743
0	338	-.319	.097	.013	-.634
0	339	-.323	.100	.035	-.683
0	340	-.354	.101	-.013	-.914
0	341	-.350	.100	.002	-.904
0	342	-.304	.095	-.017	-.608
0	343	-.311	.101	.002	-.633
0	344	-.323	.103	.047	-.661
0	345	-.318	.101	.021	-.631
0	346	-.304	.091	.002	-.700
0	347	-.306	.093	.044	-.709
0	348	-.323	.100	.054	-.745
0	349	-.318	.100	-.026	-.654
0	350	-.314	.098	.001	-.653
0	351	-.291	.094	.034	-.637
0	352	-.328	.097	.007	-.678
0	353	-.328	.097	.054	-.675
0	354	-.290	.103	.025	-.628
0	355	-.362	.102	-.053	-.781
0	356	-.317	.109	-.016	-.699
0	357	-.316	.110	.006	-.678
0	358	-.311	.100	.047	-.770
0	359	-.272	.106	.096	-.708
0	360	-.280	.108	.082	-.652
0	361	-.286	.108	.074	-.640
0	362	-.282	.099	.059	-.657
0	363	-.286	.100	.064	-.593
0	364	-.295	.101	.062	-.603
0	365	-.315	.103	.023	-.631
0	366	-.304	.096	-.011	-.639
0	401	-.183	.122	.193	-.703
0	402	-.332	.141	.141	-.939
0	403	-.264	.106	.131	-.608
0	404	-.283	.088	-.004	-.628
0	405	-.301	.112	.064	-.691
0	406	-.240	.106	.093	-.666
0	407	-.251	.114	.084	.025

WD	TAP	CPMEAN	CPRMS	CPMAX	CPMIN
0	408	-.231	.097	.041	-.616
0	409	-.216	.085	.059	-.521
0	410	-.197	.096	.115	-.549
0	411	-.197	.097	.138	-.541
0	412	-.238	.098	.095	-.595
0	413	-.251	.104	.061	-.703
0	414	-.216	.079	.048	-.524
0	415	-.203	.093	.108	-.567
0	416	-.198	.095	.125	-.552
0	417	-.227	.095	.101	-.574
0	418	-.245	.083	.083	-.543
0	419	-.247	.095	.145	-.590
0	420	-.257	.105	.113	-.701
0	421	-.298	.116	.089	-.729
0	422	-.258	.084	.015	-.564
0	423	-.286	.101	.035	-.605
0	424	-.317	.097	-.007	-.621
0	425	-.253	.096	.065	-.592
0	426	-.256	.096	.070	-.529
0	427	-.296	.097	.029	-.650
0	428	-.314	.093	-.048	-.771
0	429	-.316	.115	.010	-.823
0	430	-.267	.103	.030	-.668
0	431	-.291	.104	.051	-.695
0	432	-.087	.176	.253	-.557
0	433	-.105	.181	.247	-.576
0	434	-.096	.171	.240	-.536
0	435	-.094	.179	.253	-.563
0	436	-.086	.181	.253	-.713
0	437	-.104	.187	.335	-.608
0	438	-.276	.107	.109	-.611
0	439	-.277	.108	.111	-.649
0	440	-.298	.110	.146	-.717
0	441	-.370	.104	-.064	-.730
0	442	-.309	.110	.018	-.754
0	443	-.292	.110	.111	-.679
0	444	-.305	.110	.070	-.716
0	445	-.368	.098	-.021	-.674
0	446	-.332	.102	.024	-.659
0	447	-.332	.100	-.024	-.661
0	448	-.343	.100	.002	-.673
0	449	-.456	.121	-.126	-.972
0	450	-.360	.105	-.059	-.914
0	451	-.312	.112	.034	-.705
0	452	-.292	.117	.137	-.809
0	453	-.412	.130	-.027	-.988
0	454	-.332	.105	.037	-.726
0	455	-.273	.147	.244	-.832
0	456	-.409	.133	-.032	-.876
0	457	.443	.101	.139	-.505

APPENDIX A -- PRESSURE DATA: BASS BROTHERS BUILDING - PHASE II, DALLAS

WD	TAP	CPMEAN	CPRMS	CPMAX	CPMIN
0	458	-.358	.108	.002	-.820
0	459	-.433	.147	.033	-1.231
0	460	-.416	.125	-.033	-.892
0	461	-.415	.101	-.057	-.805
0	801	-.429	.153	.082	-1.045
0	802	-.367	.134	.135	-.951
0	803	-.051	.111	.458	-.483
0	804	-.407	.099	-.066	-.750
0	805	-.304	.108	.086	-.720
0	806	-.379	.129	.044	-.866
0	807	-.242	.113	.112	-.656
0	808	.007	.090	.343	-.257
0	809	-.005	.121	.454	-.402
0	810	-.302	.108	.062	-.673
0	901	-.333	.105	.048	-.656
0	902	-.276	.091	.065	-.572
0	903	-.095	.176	.240	-.643
0	904	-.092	.185	.253	-.666
0	905	-.272	.102	.080	-.728
0	906	-.200	.125	.230	-.734
0	907	-.248	.108	.097	-.694
0	908	-.610	.170	.020	-1.232
0	909	-.253	.097	.078	-.579
0	910	-.052	.140	.363	-.525
0	911	-.259	.112	.093	-.679
0	912	-.284	.113	.082	-.695
0	913	-.575	.163	-.049	-1.163
10	101	.044	.169	.635	-.415
10	102	.319	.175	.814	-.424
10	103	-.104	.158	.456	-.575
10	104	-.026	.131	.358	-.551
10	105	-.098	.102	.241	-.418
10	106	-.290	.121	.161	-.782
10	107	-.284	.121	.151	-.777
10	108	-.145	.115	.279	-.702
10	109	-.181	.112	.180	-.562
10	110	-.193	.120	.203	-.610
10	111	.234	.152	.767	-.216
10	112	-.063	.125	.395	-.447
10	113	.356	.180	1.084	-.474
10	114	.107	.203	.787	-.755
10	115	.034	.212	.761	-.835
10	116	-.060	.126	.417	-.523
10	117	.451	.161	.945	-.060
10	118	.391	.162	.959	-.073
10	119	.248	.140	.749	-.198
10	120	.230	.135	.722	-.184
10	121	.261	.150	.898	-.206
10	122	-.257	.116	.164	-.669
10	123	.109	.169	.727	-.589
10	124	.389	.157	.981	-.357
10	125	.289	.135	.796	-.153
10	126	.370	.126	.887	.026
10	127	.331	.149	.991	-.173
10	128	.351	.146	.993	-.136
10	129	-.070	.187	.601	-.842
10	130	-.034	.126	.444	-.662
10	131	.371	.161	.890	-.360
10	132	.325	.147	.896	-.142
10	133	.377	.151	.906	-.058
10	134	.351	.152	.916	-.123
10	135	.358	.139	.850	-.056
10	136	.274	.132	.757	-.112
10	137	.215	.126	.683	-.173
10	138	.057	.115	.463	-.298
10	139	-.040	.105	.356	-.443
10	140	.365	.149	.910	-.260
10	141	.330	.130	.793	-.101
10	142	.336	.135	.797	-.130
10	143	.341	.142	.839	-.076
10	144	.329	.147	.841	-.114
10	145	.265	.141	.765	-.163
10	146	.212	.132	.678	-.179
10	147	.064	.122	.530	-.360
10	148	-.079	.103	.305	-.464
10	149	.314	.154	.839	-.350
10	150	.295	.138	.824	-.132
10	151	.329	.118	.691	-.021
10	152	.373	.140	.864	-.082
10	153	.188	.134	.670	-.191
10	154	.176	.129	.646	-.180
10	155	.151	.130	.621	-.212
10	156	.272	.148	.811	-.323
10	157	.253	.142	.772	-.197
10	158	.330	.117	.761	-.076
10	159	.324	.122	.764	-.065
10	160	.274	.126	.778	-.117
10	161	.216	.125	.672	-.194
10	162	.159	.119	.558	-.228
10	163	.040	.117	.440	-.331
10	164	-.092	.107	.321	-.479
10	165	.231	.128	.693	-.305
10	166	.181	.122	.584	-.266
10	167	.174	.116	.553	-.203
10	168	.209	.094	.536	-.136
10	169	.146	.105	.561	-.248
10	170	.032	.104	.459	-.309
10	171	-.074	.109	.333	-.450
10	172	-.026	.092	.283	-.387
10	173	-.098	.109	.251	-.477
10	174	.225	.126	.856	-.251
10	176	-.475	.151	-.088	-1.055
10	177	.197	.132	.708	-.248
10	178	.240	.135	.774	-.178
10	179	.280	.140	.804	-.090
10	180	-.065	.123	.550	-.531
10	181	-.457	.181	.176	-1.114
10	182	.086	.127	.532	-.564
10	183	-.031	.133	.375	-.650
10	184	-.122	.095	.158	-.471
10	185	-.157	.107	.219	-.502
10	186	.129	.095	.485	-.223
10	187	.089	.096	.419	-.229
10	188	.129	.085	.415	-.189
10	189	.115	.105	.464	-.276
10	190	.073	.110	.424	-.333
10	191	.161	.117	.636	-.215
10	192	.200	.085	.496	-.125
10	193	.139	.101	.462	-.333
10	194	.146	.101	.459	-.223
10	195	.103	.114	.503	-.280
10	196	.204	.108	.721	-.116
10	197	-.010	.121	.508	-.433
10	198	-.220	.117	.150	-.623
10	201	-.254	.115	.140	-.633
10	202	-.233	.116	.179	-.620
10	203	-.163	.116	.265	-.658
10	204	.036	.121	.519	-.440
10	205	.025	.129	.552	-.423
10	206	.090	.133	.649	-.402
10	207	.159	.180	.802	-.654
10	208	-.382	.150	.099	-1.035
10	209	.004	.134	.627	-.483
10	210	.110	.141	.661	-.349
10	211	.353	.175	.959	-.147
10	212	.023	.145	.483	-.463
10	213	.035	.152	.483	-.516
10	214	.008	.170	.532	-.618
10	215	.351	.193	.912	-.347
10	216	.313	.145	.745	-.232
10	217	.279	.139	.747	-.242
10	218	.198	.161	.728	-.353
10	219	.413	.162	.988	-.404
10	220	.381	.164	.947	-.540
10	221	.024	.168	.556	-.590
10	222	.006	.175	.568	-.733
10	223	-.092	.236	.550	-.897
10	224	-.352	.132	.062	-.959
10	225	.013	.119	.369	-.401
10	226	.224	.151	.678	-.239

APPENDIX A -- PRESSURE DATA:

BASS BROTHERS BUILDING - PHASE II, DALLAS

WD	TAP	CPMEAN	CPRMS	CPMAX	CPMIN
10	227	.339	.163	.861	-.167
10	228	.265	.154	.732	-.256
10	229	.220	.151	.712	-.232
10	230	.283	.150	.797	-.338
10	231	.283	.187	.858	-.468
10	232	.245	.204	.849	-.383
10	233	-.403	.121	.019	-.899
10	234	.009	.115	.451	-.360
10	235	.174	.124	.638	-.199
10	236	.235	.135	.744	-.222
10	237	.206	.126	.680	-.261
10	238	.180	.168	.820	-.318
10	239	.251	.138	.704	-.289
10	240	.189	.204	.861	-.494
10	241	.192	.215	.768	-.557
10	242	.217	.167	.720	-.490
10	243	.209	.198	.787	-.551
10	244	.174	.214	.819	-.538
10	245	.208	.133	.630	-.335
10	247	.180	.154	.622	-.462
10	248	-.380	.113	.032	-.835
10	249	-.085	.098	.398	-.462
10	250	.154	.122	.815	-.314
10	251	.217	.131	.699	-.207
10	252	.176	.120	.827	-.192
10	253	.094	.130	.580	-.458
10	254	.176	.151	.684	-.493
10	255	.149	.181	.735	-.568
10	256	.111	.195	.744	-.683
10	257	.125	.190	.689	-.546
10	258	-.422	.132	-.008	-.968
10	259	.017	.090	.374	-.341
10	260	.111	.119	.633	-.346
10	261	.193	.133	.764	-.276
10	262	.148	.124	.641	-.287
10	263	.180	.104	.528	-.141
10	264	.107	.164	.615	-.461
10	265	.063	.174	.698	-.483
10	266	-.352	.112	-.049	-.775
10	267	-.118	.087	.194	-.505
10	268	.199	.126	.640	-.218
10	269	.164	.129	.636	-.234
10	270	.072	.141	.648	-.549
10	271	-.094	.090	.268	-.471
10	272	.008	.121	.446	-.805
10	273	-.178	.110	.199	-.846
10	274	.003	.107	.458	-.496
10	275	.158	.100	.510	-.198
10	276	.096	.121	.524	-.336
10	277	.142	.108	.526	-.288

WD	TAP	CPMEAN	CPRMS	CPMAX	CPMIN
10	278	-.530	.150	-.046	-1.128
10	279	-.094	.082	.187	-.369
10	280	.100	.109	.527	-.298
10	281	.090	.125	.588	-.353
10	301	-.260	.097	.049	-.570
10	302	-.225	.098	.092	-.585
10	303	-.290	.111	.091	-.777
10	304	-.305	.102	.044	-.647
10	305	-.287	.112	.147	-.867
10	306	-.257	.103	.074	-.663
10	307	-.226	.084	.079	-.522
10	308	-.217	.098	.173	-.551
10	309	-.193	.098	.205	-.542
10	310	-.239	.110	.078	-.920
10	311	-.251	.099	.040	-.704
10	312	-.238	.110	.104	-.798
10	313	-.189	.098	.159	-.512
10	314	-.215	.098	.110	-.584
10	315	-.222	.088	.057	-.502
10	316	-.241	.106	.124	-.704
10	317	-.242	.098	.086	-.635
10	318	-.261	.098	.065	-.584
10	319	-.242	.090	.053	-.551
10	320	-.229	.102	.114	-.581
10	321	-.238	.086	.076	-.529
10	322	-.206	.104	.171	-.534
10	323	-.220	.106	.137	-.560
10	324	-.301	.108	.030	-.811
10	325	-.304	.114	.066	-.883
10	326	-.270	.111	.037	-.813
10	327	-.286	.111	.073	-.695
10	328	-.296	.090	-.031	-.611
10	329	-.282	.101	.019	-.623
10	330	-.292	.106	.016	-.636
10	331	-.273	.106	.036	-.621
10	332	-.358	.103	-.023	-.711
10	333	-.330	.097	-.012	-.659
10	334	-.295	.095	.013	-.667
10	335	-.309	.097	.016	-.626
10	336	-.314	.089	-.026	-.641
10	337	-.351	.101	-.020	-.703
10	338	-.353	.106	-.045	-.703
10	339	-.359	.102	-.004	-.764
10	340	-.386	.110	.018	-.831
10	341	-.369	.110	.016	-.861
10	342	-.320	.101	.015	-.681
10	343	-.359	.108	.002	-.756
10	344	-.358	.108	.010	-.772
10	345	-.346	.105	.020	-.758
10	346	-.298	.100	.024	-.773

WD	TAP	CPMEAN	CPRMS	CPMAX	CPMIN
10	347	-.343	.107	.022	-.853
10	348	-.354	.108	.001	-.860
10	349	-.306	.102	.101	-.709
10	350	-.308	.101	.077	-.747
10	351	-.339	.105	-.024	-.716
10	352	-.368	.106	-.031	-.764
10	353	-.354	.105	-.037	-.717
10	354	-.283	.099	.002	-.673
10	355	-.362	.105	.015	-.763
10	356	-.380	.103	-.076	-.786
10	357	-.363	.103	-.067	-.780
10	358	-.286	.106	.101	-.658
10	359	-.324	.115	.092	-.735
10	360	-.335	.118	.081	-.751
10	361	-.327	.113	.076	-.756
10	362	-.325	.102	-.016	-.711
10	363	-.329	.112	.006	-.794
10	364	-.348	.113	-.027	-.813
10	365	-.349	.114	-.015	-.806
10	366	-.244	.101	.075	-.643
10	401	-.110	.114	.304	-.527
10	402	-.287	.132	.124	-1.001
10	403	-.265	.117	.110	-.853
10	404	-.285	.093	.029	-.635
10	405	-.282	.102	.036	-.689
10	406	-.243	.110	.092	-.641
10	407	-.224	.115	.129	-.655
10	408	-.227	.099	.093	-.567
10	409	-.211	.091	.149	-.521
10	410	-.202	.102	.189	-.547
10	411	-.177	.100	.207	-.496
10	412	-.223	.103	.190	-.550
10	413	-.274	.108	.062	-.656
10	414	-.202	.085	.115	-.478
10	415	-.200	.099	.168	-.515
10	416	-.172	.098	.176	-.485
10	417	-.206	.100	.147	-.512
10	418	-.232	.088	.069	-.514
10	419	-.240	.101	.117	-.570
10	420	-.211	.102	.171	-.553
10	421	-.245	.110	.211	-.678
10	422	-.254	.089	.060	-.562
10	423	-.284	.104	.091	-.656
10	424	-.219	.101	.122	-.612
10	425	-.259	.100	.092	-.609
10	426	-.244	.093	.115	-.588
10	427	-.291	.101	.032	-.654
10	428	-.287	.087	.020	-.602
10	429	-.293	.107	.084	-.723
10	430	-.242	.093	.083	-.557

APPENDIX A -- PRESSURE DATA:

BASS BROTHERS BUILDING - PHASE II, DALLAS

WD	TAP	CPMEAN	CPRMS	CPMAX	CPMIN
10	431	-.273	.095	.056	-.600
10	432	-.275	.080	-.033	-.538
10	433	-.268	.091	.045	-.571
10	434	-.260	.091	.022	-.574
10	435	-.308	.093	-.022	-.658
10	436	-.337	.087	-.081	-.635
10	437	-.346	.100	-.036	-.700
10	438	-.275	.114	.089	-.723
10	439	-.295	.114	.103	-.702
10	440	-.285	.115	.111	-.712
10	441	-.273	.105	.036	-.701
10	442	-.322	.113	.011	-.743
10	443	-.330	.113	.081	-.738
10	444	-.321	.111	.190	-.724
10	445	-.292	.107	.020	-.693
10	446	-.382	.116	-.028	-.780
10	447	-.407	.116	-.046	-.837
10	448	-.389	.115	-.029	-.915
10	449	-.343	.127	.057	-.938
10	450	-.373	.119	-.014	-.845
10	451	-.356	.121	.022	-.783
10	452	-.266	.111	.086	-.686
10	453	-.378	.120	.023	-1.030
10	454	-.365	.111	.064	-.715
10	455	-.322	.141	.193	-.925
10	456	-.361	.127	.012	-.836
10	457	-.338	.109	.020	-.713
10	458	-.365	.115	.018	-.778
10	459	-.448	.141	.053	-1.206
10	460	-.388	.127	.032	-.832
10	461	-.294	.100	.048	-.613
10	801	-.366	.162	.127	-1.072
10	802	-.381	.135	.040	-.862
10	803	-.054	.113	.364	-.497
10	804	-.297	.097	.048	-.583
10	805	-.326	.106	.045	-.646
10	806	-.399	.126	.006	-.803
10	807	-.250	.106	.144	-.597
10	808	.120	.097	.423	-.222
10	809	.180	.123	.642	-.262
10	810	-.383	.120	.035	-.835
10	901	-.322	.103	.032	-.689
10	902	-.260	.088	.087	-.572
10	903	-.193	.103	.124	-.590
10	904	-.264	.112	.281	-.667
10	905	-.262	.100	.130	-.668
10	906	-.106	.127	.334	-.538
10	907	-.237	.099	.056	-.675
10	908	-.550	.155	-.067	-1.130
10	909	-.234	.094	.090	-.548
10	910	.065	.122	.504	-.421
10	911	-.225	.102	.128	-.569
10	912	-.265	.106	.070	-.631
10	913	-.636	.165	-.147	-1.166
20	101	.150	.193	.822	-.416
20	102	.064	.251	.716	-1.003
20	103	-.247	.138	.251	-.719
20	104	-.177	.164	.342	-.743
20	105	-.100	.105	.223	-.529
20	106	-.303	.121	.049	-.871
20	107	-.282	.120	.104	-.870
20	108	-.209	.106	.153	-.618
20	109	-.140	.125	.296	-.575
20	110	-.183	.135	.334	-.665
20	111	.252	.160	.904	-.384
20	112	-.122	.115	.335	-.522
20	113	.102	.264	.753	-1.199
20	114	-.157	.230	.463	-.971
20	115	-.170	.203	.391	-.983
20	116	-.132	.103	.201	-.546
20	117	.359	.159	.855	-.110
20	118	.290	.159	.757	-.234
20	119	.175	.143	.603	-.481
20	120	.206	.133	.636	-.290
20	121	.268	.151	.883	-.269
20	122	-.308	.106	.096	-.715
20	123	.030	.177	.585	-.614
20	124	.220	.200	.753	-.559
20	125	.173	.148	.601	-.491
20	126	.249	.125	.689	-.201
20	127	.208	.150	.754	-.277
20	128	.317	.157	.913	-.236
20	129	-.174	.172	.418	-.947
20	130	-.107	.114	.284	-.505
20	131	.242	.235	.850	-.559
20	132	.225	.161	.702	-.485
20	133	.250	.158	.755	-.449
20	134	.230	.167	.802	-.515
20	135	.286	.155	.810	-.322
20	136	.221	.129	.671	-.267
20	137	.171	.119	.570	-.219
20	138	.006	.108	.391	-.348
20	139	-.068	.098	.348	-.413
20	140	.195	.204	.855	-.533
20	141	.204	.144	.640	-.487
20	142	.187	.146	.831	-.532
20	143	.247	.160	.789	-.300
20	144	.287	.142	.782	-.180
20	145	.218	.126	.645	-.195
20	146	.169	.115	.571	-.200
20	147	.011	.107	.391	-.331
20	148	-.121	.103	.227	-.522
20	149	.202	.204	.817	-.461
20	150	.201	.153	.690	-.419
20	151	.259	.119	.636	-.134
20	152	.238	.152	.781	-.392
20	153	.158	.121	.563	-.282
20	154	.151	.114	.548	-.265
20	155	.121	.116	.512	-.299
20	156	.212	.171	.694	-.507
20	157	.189	.146	.638	-.352
20	158	.245	.133	.781	-.245
20	159	.243	.139	.806	-.286
20	160	.235	.133	.690	-.246
20	161	.182	.113	.566	-.315
20	162	.120	.104	.508	-.330
20	163	-.005	.102	.394	-.427
20	164	-.143	.101	.237	-.547
20	165	.185	.170	.718	-.515
20	166	.136	.131	.560	-.419
20	167	.128	.131	.555	-.495
20	168	.149	.104	.454	-.235
20	169	.122	.105	.518	-.250
20	170	.018	.099	.363	-.320
20	171	-.107	.103	.223	-.460
20	172	-.064	.085	.257	-.325
20	173	-.135	.101	.183	-.488
20	174	.194	.133	.705	-.282
20	176	-.507	.143	-.145	-1.100
20	177	.150	.135	.643	-.459
20	178	.162	.133	.617	-.396
20	179	.202	.129	.628	-.253
20	180	-.117	.110	.474	-.441
20	181	-.528	.178	.052	-1.358
20	182	.108	.113	.488	-.397
20	183	-.056	.141	.365	-.621
20	184	-.146	.092	.239	-.567
20	185	-.190	.109	.172	-.674
20	186	.137	.101	.431	-.325
20	187	.048	.115	.366	-.526
20	188	.077	.091	.444	-.245
20	189	.064	.110	.531	-.328
20	190	.049	.112	.505	-.344
20	191	.226	.134	.717	-.180
20	192	.184	.090	.500	-.169
20	193	.054	.134	.470	-.558
20	194	.095	.109	.455	-.348
20	195	.006	.108	.403	-.407
20	196	.091	.099	.467	-.179
20	197	-.109	.110	.373	-.488

APPENDIX A -- PRESSURE DATA: BASS BROTHERS BUILDING - PHASE II, DALLAS

WD	TAP	CPMEAN	CPRMS	CPMAX	CPMIN
20	198	-.282	.106	.103	-.628
20	201	-.277	.116	.085	-.749
20	202	-.250	.115	.128	-.709
20	203	-.196	.111	.197	-.673
20	204	.064	.121	.511	-.396
20	205	.108	.142	.509	-.351
20	206	.183	.153	.657	-.291
20	207	.284	.180	.919	-.293
20	208	-.341	.163	.201	-.910
20	209	.027	.138	.628	-.437
20	210	.127	.138	.622	-.343
20	211	.425	.179	.925	-.183
20	212	.166	.152	.690	-.333
20	213	.188	.159	.769	-.341
20	214	.240	.204	.859	-.473
20	215	.440	.176	1.069	-.148
20	216	.369	.145	.977	-.177
20	217	.326	.149	.937	-.263
20	218	.375	.157	.862	-.372
20	219	.439	.164	1.018	-.193
20	220	.427	.177	1.053	-.172
20	221	.239	.168	.725	-.528
20	222	.193	.173	.747	-.588
20	223	.281	.211	.892	-.866
20	224	-.467	.159	-.002	-1.174
20	225	.039	.115	.483	-.306
20	226	.245	.145	.824	-.185
20	227	.390	.151	.917	-.063
20	228	.323	.146	.861	-.138
20	229	.346	.167	.897	-.121
20	230	.396	.160	.978	-.037
20	231	.446	.163	1.022	-.166
20	232	.424	.170	1.018	-.219
20	233	-.466	.135	-.016	-1.081
20	234	.024	.120	.526	-.386
20	235	.238	.129	.781	-.177
20	236	.316	.145	.864	-.132
20	237	.280	.132	.749	-.087
20	238	.262	.188	.859	-.238
20	239	.371	.122	.833	.045
20	240	.343	.166	.924	-.307
20	241	.363	.174	.941	-.214
20	242	.312	.155	.890	-.097
20	243	.351	.162	.949	-.204
20	244	.319	.177	.944	-.274
20	245	.307	.125	.735	-.099
20	247	.298	.147	.820	-.094
20	248	-.426	.127	-.047	-.883
20	249	-.051	.100	.339	-.412
20	250	.182	.124	.664	-.238

WD	TAP	CPMEAN	CPRMS	CPMAX	CPMIN
20	251	.298	.139	.804	-.131
20	252	.233	.123	.693	-.155
20	253	.218	.135	.714	-.180
20	254	.290	.142	.842	-.189
20	255	.313	.149	.853	-.259
20	256	.287	.161	.819	-.277
20	257	.280	.165	.903	-.255
20	258	-.506	.152	.150	-1.191
20	259	.009	.089	.301	-.279
20	260	.129	.118	.498	-.210
20	261	.260	.133	.736	-.093
20	262	.221	.128	.657	-.134
20	263	.222	.096	.565	-.077
20	264	.197	.124	.630	-.299
20	265	.196	.140	.676	-.304
20	266	-.447	.128	-.069	-1.043
20	267	-.139	.087	.158	-.470
20	268	.235	.124	.708	-.101
20	269	.248	.125	.755	-.084
20	270	.170	.127	.645	-.223
20	271	-.075	.096	.218	-.450
20	272	.045	.124	.474	-.374
20	273	-.190	.129	.196	-.787
20	274	.012	.116	.398	-.499
20	275	.221	.103	.561	-.136
20	276	.175	.123	.576	-.248
20	277	.215	.115	.609	-.183
20	278	-.672	.177	-.108	-1.400
20	279	-.103	.085	.257	-.365
20	280	.143	.122	.565	-.228
20	281	.187	.136	.642	-.196
20	301	-.324	.109	.054	-.778
20	302	-.259	.108	.139	-.704
20	303	-.322	.129	.082	-1.093
20	304	-.324	.115	.008	-.789
20	305	-.365	.127	.046	-1.180
20	306	-.278	.106	.043	-.627
20	307	-.254	.092	.034	-.537
20	308	-.258	.105	.116	-.632
20	309	-.223	.103	.150	-.600
20	310	-.293	.129	.066	-.873
20	311	-.298	.106	-.011	-.837
20	312	-.306	.121	.023	-1.039
20	313	-.238	.101	.092	-.741
20	314	-.259	.102	.060	-.779
20	315	-.234	.091	.064	-.567
20	316	-.301	.120	.143	-.855
20	317	-.271	.104	.099	-.643
20	318	-.296	.104	.077	-.682
20	319	-.277	.088	-.018	-.585

WD	TAP	CPMEAN	CPRMS	CPMAX	CPMIN
20	320	-.276	.097	.004	-.604
20	321	-.275	.096	.075	-.597
20	322	-.238	.099	.037	-.569
20	323	-.254	.101	.016	-.581
20	324	-.303	.106	.043	-.859
20	325	-.330	.113	.039	-.788
20	326	-.285	.107	.076	-.718
20	327	-.300	.107	.057	-.767
20	328	-.300	.086	-.048	-.592
20	329	-.310	.099	-.015	-.649
20	330	-.308	.104	.009	-.692
20	331	-.292	.101	.016	-.638
20	332	-.350	.117	-.024	-.786
20	333	-.356	.104	.036	-.737
20	334	-.313	.101	.065	-.698
20	335	-.329	.099	.047	-.665
20	336	-.303	.082	-.015	-.608
20	337	-.368	.102	-.029	-.740
20	338	-.381	.098	-.057	-.700
20	339	-.391	.100	-.049	-.706
20	340	-.401	.110	-.026	-.849
20	341	-.383	.110	-.022	-.895
20	342	-.357	.100	-.017	-.715
20	343	-.359	.106	.000	-.772
20	344	-.369	.106	-.011	-.758
20	345	-.365	.104	-.031	-.766
20	346	-.349	.106	-.016	-.718
20	347	-.354	.113	.000	-.761
20	348	-.368	.116	-.007	-.782
20	349	-.352	.110	-.041	-.821
20	350	-.345	.105	-.059	-.753
20	351	-.340	.104	.020	-.685
20	352	-.357	.107	.014	-.720
20	353	-.356	.106	.003	-.763
20	354	-.359	.097	-.003	-.678
20	355	-.370	.110	-.085	-.812
20	356	-.373	.105	.015	-.740
20	357	-.372	.105	.020	-.705
20	358	-.360	.102	-.024	-.753
20	359	-.352	.113	.021	-.785
20	360	-.364	.115	.025	-.805
20	361	-.362	.113	.020	-.808
20	362	-.340	.104	.008	-.782
20	363	-.342	.113	.037	-.727
20	364	-.359	.115	.031	-.745
20	365	-.358	.113	.035	-.762
20	366	-.340	.102	-.031	-.775
20	401	-.079	.115	.335	-.570
20	402	-.254	.112	.099	-.714
20	403	-.261	.103	.060	-.581

APPENDIX A -- PRESSURE DATA:

BASS BROTHERS BUILDING - PHASE II, DALLAS

WD	TAP	CPMEAN	CPRMS	CPMAX	CPMIN
20	404	-.257	.097	.109	-.575
20	405	-.276	.116	.064	-.701
20	406	-.243	.112	.143	-.763
20	407	-.210	.112	.178	-.776
20	408	-.221	.102	.180	-.608
20	409	-.208	.084	.086	-.512
20	410	-.220	.096	.126	-.566
20	411	-.185	.093	.125	-.505
20	412	-.227	.095	.097	-.559
20	413	-.258	.101	.059	-.633
20	414	-.205	.078	.018	-.469
20	415	-.225	.093	.043	-.523
20	416	-.189	.091	.084	-.483
20	417	-.221	.092	.043	-.519
20	418	-.212	.078	.083	-.490
20	419	-.234	.090	.101	-.587
20	420	-.198	.092	.152	-.549
20	421	-.232	.096	.122	-.622
20	422	-.247	.090	.026	-.571
20	423	-.295	.098	.037	-.650
20	424	-.273	.099	.082	-.603
20	425	-.273	.103	.049	-.636
20	426	-.248	.102	.046	-.593
20	427	-.290	.106	.043	-.651
20	428	-.270	.097	.037	-.606
20	429	-.294	.114	.077	-.698
20	430	-.257	.104	.120	-.603
20	431	-.289	.106	.097	-.639
20	432	-.271	.083	-.024	-.571
20	433	-.279	.095	.019	-.639
20	434	-.266	.094	.041	-.635
20	435	-.311	.099	-.033	-.652
20	436	-.331	.094	-.075	-.691
20	437	-.359	.110	-.022	-.794
20	438	-.268	.111	.120	-.650
20	439	-.277	.113	.120	-.669
20	440	-.284	.115	.105	-.679
20	441	-.337	.105	.013	-.798
20	442	-.319	.109	.049	-.782
20	443	-.311	.110	.173	-.743
20	444	-.310	.107	.139	-.721
20	445	-.342	.106	.037	-.803
20	446	-.371	.117	-.027	-.932
20	447	-.383	.118	-.010	-.867
20	448	-.374	.117	-.015	-1.035
20	449	-.408	.121	-.074	-.841
20	450	-.369	.116	-.016	-.795
20	451	-.348	.116	-.021	-.867
20	452	-.309	.115	.097	-.859
20	453	-.401	.118	-.028	-1.002

WD	TAP	CPMEAN	CPRMS	CPMAX	CPMIN
20	454	-.366	.111	-.006	-.733
20	455	-.307	.130	.131	-.769
20	456	-.400	.131	-.009	-1.130
20	457	-.392	.106	-.041	-.754
20	458	-.365	.112	-.001	-.806
20	459	-.434	.131	-.041	-1.015
20	460	-.386	.117	.039	-.817
20	461	-.382	.106	-.053	-.753
20	801	-.386	.156	.079	-1.135
20	802	-.426	.136	-.010	-.950
20	803	-.104	.118	.271	-.582
20	804	-.371	.093	-.078	-.770
20	805	-.347	.106	-.018	-.804
20	806	-.380	.124	-.011	-.964
20	807	-.287	.104	.063	-.646
20	808	.032	.099	.356	-.271
20	809	.197	.125	.763	-.239
20	810	-.418	.123	.124	-.892
20	901	-.381	.104	-.022	-.910
20	902	-.288	.097	-.003	-.605
20	903	-.253	.106	.121	-.809
20	904	-.302	.108	.047	-.697
20	905	-.225	.115	.173	-.715
20	906	-.112	.158	.408	-.701
20	907	-.227	.105	.099	-.621
20	908	-.456	.148	-.035	-.993
20	909	-.250	.095	.059	-.618
20	910	.060	.131	.431	-.524
20	911	-.245	.105	.121	-.769
20	912	-.281	.105	.103	-.733
20	913	-.758	.172	-.266	-1.340
30	101	.032	.251	.887	-.712
30	102	-.455	.339	.487	-1.438
30	103	-.430	.163	.103	-1.002
30	104	-.328	.160	.214	-.842
30	105	-.178	.148	.288	-.797
30	106	-.318	.141	.193	-.963
30	107	-.311	.137	.152	-1.021
30	108	-.234	.111	.131	-.645
30	109	-.191	.132	.301	-.725
30	110	-.244	.135	.225	-.721
30	111	.226	.195	.974	-.730
30	112	-.162	.113	.237	-.577
30	113	-.400	.402	.443	-2.054
30	114	-.410	.193	.184	-1.166
30	115	-.411	.165	.102	-1.030
30	116	-.239	.110	.142	-.700
30	117	.160	.162	.665	-.634
30	118	.078	.164	.651	-.691
30	119	-.008	.177	.517	-.634

WD	TAP	CPMEAN	CPRMS	CPMAX	CPMIN
30	120	.070	.167	.598	-.551
30	121	.227	.176	.801	-.467
30	122	-.325	.119	.080	-.775
30	123	-.078	.178	.411	-.714
30	124	-.051	.199	.674	-.849
30	125	-.026	.187	.529	-.737
30	126	.049	.143	.452	-.493
30	127	-.008	.202	.667	-.828
30	128	.261	.184	.970	-.356
30	129	-.158	.170	.570	-.877
30	130	-.130	.109	.328	-.455
30	131	-.036	.191	.961	-.967
30	132	-.007	.171	.668	-.804
30	133	.036	.173	.619	-.523
30	134	-.002	.183	.623	-.775
30	135	.064	.254	.850	-.820
30	136	.148	.182	.709	-.649
30	137	.114	.145	.641	-.532
30	138	-.014	.118	.402	-.552
30	139	-.071	.099	.320	-.480
30	140	-.005	.203	.745	-1.149
30	141	.020	.178	.575	-.898
30	142	.020	.179	.605	-.689
30	143	.050	.178	.683	-.609
30	144	.141	.204	.723	-.635
30	145	.150	.139	.638	-.539
30	146	.099	.119	.518	-.466
30	147	-.020	.110	.368	-.474
30	148	-.114	.103	.236	-.458
30	149	-.009	.205	.656	-1.386
30	150	.007	.177	.471	-1.317
30	151	.044	.153	.481	-.570
30	152	.009	.184	.631	-.953
30	153	.131	.131	.535	-.406
30	154	.102	.121	.509	-.339
30	155	.092	.119	.454	-.375
30	156	-.029	.184	.670	-.988
30	157	-.012	.169	.539	-.825
30	158	.092	.177	.563	-.787
30	159	.084	.182	.675	-.830
30	160	.070	.205	.602	-.670
30	161	.123	.136	.524	-.505
30	162	.060	.115	.595	-.417
30	163	-.041	.107	.390	-.439
30	164	-.150	.105	.224	-.610
30	165	-.058	.203	.636	-1.135
30	166	-.025	.161	.459	-.849
30	167	-.045	.158	.485	-.867
30	168	.024	.113	.381	-.424
30	169	.034	.140	.419	-.981

APPENDIX A -- PRESSURE DATA:

BASS BROTHERS BUILDING - PHASE II, DALLAS

WD	TAP	CPMEAN	CPRMS	CPMAX	CPMIN
30	170	-.009	.100	.469	-.454
30	171	-.120	.100	.269	-.539
30	172	-.081	.085	.355	-.357
30	173	-.165	.103	.334	-.568
30	174	.044	.147	.531	-.462
30	176	-.513	.157	-.066	-1.338
30	177	.006	.175	.498	-.827
30	178	.032	.157	.438	-.692
30	179	.082	.147	.506	-.563
30	180	-.129	.114	.326	-.518
30	181	-.481	.169	.138	-1.057
30	182	.050	.119	.433	-.647
30	183	-.148	.158	.302	-.845
30	184	-.154	.092	.092	-.558
30	185	-.201	.105	.161	-.577
30	186	.087	.143	.482	-.955
30	187	-.037	.126	.309	-.666
30	188	-.005	.102	.279	-.522
30	189	-.033	.117	.340	-.558
30	190	-.012	.103	.329	-.442
30	191	.230	.121	.725	-.296
30	192	.137	.102	.472	-.193
30	193	-.103	.192	.399	-.984
30	194	.015	.122	.393	-.406
30	195	-.081	.121	.327	-.536
30	196	.004	.105	.294	-.369
30	197	-.152	.098	.182	-.478
30	198	-.296	.104	.203	-.740
30	201	-.286	.146	.246	-.874
30	202	-.287	.147	.238	-.905
30	203	-.210	.130	.271	-.734
30	204	.078	.120	.502	-.304
30	205	.154	.141	.668	-.277
30	206	.215	.158	.756	-.291
30	207	.280	.165	.972	-.214
30	208	-.200	.154	.450	-.949
30	209	.093	.152	.801	-.400
30	210	.143	.146	.752	-.377
30	211	.460	.173	1.031	-.051
30	212	.306	.169	.896	-.272
30	213	.297	.168	.871	-.278
30	214	.376	.185	1.092	-.461
30	215	.482	.185	1.188	-.126
30	216	.405	.147	.922	-.017
30	217	.370	.154	.881	-.083
30	218	.437	.156	.960	-.060
30	219	.387	.167	.953	-.102
30	220	.396	.160	.944	-.087
30	221	.351	.158	.943	-.110
30	222	.324	.172	.968	-.191

WD	TAP	CPMEAN	CPRMS	CPMAX	CPMIN
30	223	.416	.167	.923	-.203
30	224	-.411	.208	.162	-1.173
30	225	.095	.123	.619	-.289
30	226	.274	.143	.829	-.189
30	227	.367	.151	.911	-.131
30	228	.349	.149	.872	-.135
30	229	.410	.141	.971	-.041
30	230	.427	.148	1.067	-.059
30	231	.421	.151	1.119	-.062
30	232	.379	.144	.975	-.121
30	233	-.431	.166	.018	-1.196
30	234	.096	.124	.591	-.303
30	235	.259	.135	.713	-.115
30	236	.365	.146	.835	.007
30	237	.354	.141	.798	-.051
30	238	.352	.179	.903	-.182
30	239	.399	.122	.835	.045
30	240	.371	.158	.920	-.058
30	241	.400	.138	.868	-.061
30	242	.382	.139	.901	-.062
30	243	.371	.141	.902	-.073
30	244	.330	.144	.969	-.087
30	245	.367	.129	.818	-.012
30	247	.321	.144	.872	-.115
30	248	-.406	.147	.004	-.976
30	249	.033	.127	.495	-.410
30	250	.235	.141	.756	-.320
30	251	.306	.134	.858	-.112
30	252	.280	.141	.877	-.103
30	253	.300	.125	.725	-.070
30	254	.336	.133	.801	-.059
30	255	.308	.134	.762	-.118
30	256	.303	.134	.774	-.116
30	257	.308	.128	.718	-.041
30	258	-.514	.168	.106	-1.283
30	259	.041	.092	.479	-.262
30	260	.130	.115	.641	-.241
30	261	.255	.123	.742	-.197
30	262	.227	.124	.695	-.171
30	263	.302	.112	.725	.008
30	264	.264	.130	.826	-.113
30	265	.254	.127	.813	-.107
30	266	-.496	.163	.161	-1.315
30	267	-.085	.099	.332	-.435
30	268	.289	.145	.827	-.121
30	269	.322	.146	.913	-.103
30	270	.166	.125	.638	-.219
30	271	-.002	.106	.437	-.356
30	272	.095	.145	.570	-.434
30	273	-.181	.143	.324	-1.122

WD	TAP	CPMEAN	CPRMS	CPMAX	CPMIN
30	274	.059	.132	.562	-.645
30	275	.259	.105	.676	-.234
30	276	.218	.121	.675	-.285
30	277	.234	.115	.677	-.303
30	278	-.632	.199	.019	-1.625
30	279	-.043	.098	.354	-.395
30	280	.191	.118	.827	-.191
30	281	.254	.121	.755	-.114
30	301	-.324	.113	.076	-.701
30	302	-.334	.117	.062	-.766
30	303	-.347	.135	.042	-1.510
30	304	-.324	.107	.031	-.804
30	305	-.367	.115	.013	-.829
30	306	-.312	.099	.033	-.704
30	307	-.267	.089	.043	-.599
30	308	-.291	.105	.074	-.722
30	309	-.249	.102	.099	-.609
30	310	-.329	.126	.028	-.929
30	311	-.318	.092	-.056	-.801
30	312	-.347	.106	-.037	-.888
30	313	-.284	.093	.003	-.590
30	314	-.303	.095	.008	-.604
30	315	-.249	.080	.017	-.522
30	316	-.349	.124	.022	-.970
30	317	-.296	.103	.001	-.715
30	318	-.321	.103	-.024	-.701
30	319	-.295	.090	.043	-.605
30	320	-.312	.102	.095	-.740
30	321	-.303	.101	.003	-.670
30	322	-.267	.101	.136	-.726
30	323	-.283	.102	.199	-.763
30	324	-.319	.104	-.007	-.739
30	325	-.350	.106	-.031	-.747
30	326	-.303	.101	.023	-.727
30	327	-.317	.103	.057	-.652
30	328	-.299	.095	.010	-.574
30	329	-.327	.109	.018	-.655
30	330	-.325	.111	.013	-.689
30	331	-.317	.111	.014	-.671
30	332	-.358	.110	.014	-.785
30	333	-.378	.114	-.036	-.839
30	334	-.333	.109	-.017	-.807
30	335	-.347	.106	-.037	-.746
30	336	-.301	.090	-.021	-.597
30	337	-.391	.105	-.026	-.757
30	338	-.397	.108	-.070	-.752
30	339	-.398	.111	-.013	-.769
30	340	-.376	.120	-.022	-.915
30	341	-.393	.127	.016	-.866
30	342	-.449	.126	-.087	-.890

APPENDIX A -- PRESSURE DATA: BASS BROTHERS BUILDING - PHASE II, DALLAS

WD	TAP	CPMEAN	CPRMS	CPMAX	CPMIN
30	343	-.400	.123	-.009	-.825
30	344	-.387	.116	-.009	-.814
30	345	-.391	.115	.019	-.783
30	346	-.413	.112	-.038	-.855
30	347	-.371	.116	.023	-.835
30	348	-.376	.117	.018	-.863
30	349	-.343	.135	.068	-.974
30	350	-.336	.130	.034	-1.239
30	351	-.387	.114	-.021	-.963
30	352	-.394	.119	-.019	-1.135
30	353	-.400	.117	-.003	-1.045
30	354	-.444	.122	-.049	-.925
30	355	-.356	.129	.157	-.929
30	356	-.390	.130	-.017	-.930
30	357	-.390	.126	-.018	-1.005
30	358	-.431	.109	-.067	-.959
30	359	-.381	.114	.002	-.807
30	360	-.394	.117	-.007	-.886
30	361	-.393	.114	-.008	-.887
30	362	-.312	.105	.039	-.732
30	363	-.348	.109	-.001	-.749
30	364	-.367	.113	-.023	-.764
30	365	-.360	.108	-.009	-.767
30	366	-.404	.119	-.070	-1.018
30	401	-.213	.143	.240	-.804
30	402	-.294	.132	.067	-.857
30	403	-.274	.109	.082	-.678
30	404	-.256	.095	.024	-.592
30	405	-.274	.104	.043	-.689
30	406	-.275	.109	.050	-.682
30	407	-.243	.109	.105	-.756
30	408	-.240	.100	.072	-.590
30	409	-.197	.088	.106	-.554
30	410	-.229	.102	.126	-.626
30	411	-.194	.098	.162	-.569
30	412	-.232	.101	.144	-.652
30	413	-.268	.104	.103	-.639
30	414	-.189	.082	.083	-.485
30	415	-.228	.098	.096	-.596
30	416	-.195	.095	.120	-.561
30	417	-.223	.097	.096	-.600
30	418	-.213	.083	.083	-.491
30	419	-.256	.098	.108	-.593
30	420	-.224	.096	.117	-.534
30	421	-.257	.101	.108	-.632
30	422	-.217	.088	.091	-.549
30	423	-.299	.104	.009	-.698
30	424	-.343	.103	.002	-.712
30	425	-.259	.102	.104	-.658
30	426	-.233	.099	.115	-.604

WD	TAP	CPMEAN	CPRMS	CPMAX	CPMIN
30	427	-.266	.101	.099	-.659
30	428	-.259	.092	.067	-.585
30	429	-.306	.110	.087	-.710
30	430	-.265	.105	.080	-.605
30	431	-.295	.107	.051	-.635
30	432	-.261	.100	.067	-.591
30	433	-.290	.115	.084	-.660
30	434	-.276	.113	.084	-.631
30	435	-.314	.118	.047	-.687
30	436	-.303	.098	-.034	-.886
30	437	-.346	.111	-.011	-.749
30	438	-.316	.111	.065	-.772
30	439	-.314	.113	.059	-.850
30	440	-.328	.113	.038	-.830
30	441	-.404	.109	-.093	-.802
30	442	-.350	.113	-.009	-.750
30	443	-.334	.113	.006	-.779
30	444	-.339	.114	.015	-.805
30	445	-.402	.102	-.100	-.764
30	446	-.376	.109	-.054	-.776
30	447	-.375	.109	-.060	-.779
30	448	-.378	.111	-.067	-.817
30	449	-.474	.124	-.103	-.915
30	450	-.384	.115	-.023	-.821
30	451	-.348	.114	-.009	-.787
30	452	-.272	.113	.070	-.810
30	453	-.368	.125	.010	-.943
30	454	-.396	.132	-.018	-1.121
30	455	-.328	.133	.112	-.844
30	456	-.346	.129	.042	-.875
30	457	-.450	.118	-.108	-.983
30	458	-.387	.123	.094	-.882
30	459	-.481	.131	-.052	-.922
30	460	-.394	.111	-.031	-.805
30	461	-.429	.114	-.131	-.883
30	801	-.469	.149	-.032	-1.117
30	802	-.412	.140	.007	-.976
30	803	-.164	.131	.337	-.643
30	804	-.440	.113	-.106	-.860
30	805	-.366	.113	.000	-.793
30	806	-.367	.119	-.020	-.817
30	807	-.330	.114	.049	-.783
30	808	-.060	.112	.309	-.534
30	809	.234	.131	.784	-.176
30	810	-.405	.127	.007	-.886
30	901	-.395	.129	.015	-1.198
30	902	-.303	.087	-.008	-.588
30	903	-.336	.127	.030	-.846
30	904	-.341	.111	.038	-.694
30	905	-.206	.119	.234	-.645

WD	TAP	CPMEAN	CPRMS	CPMAX	CPMIN
30	906	-.260	.173	.442	-.832
30	907	-.237	.118	.128	-.717
30	908	-.459	.152	-.001	-1.119
30	909	-.258	.107	.076	-.789
30	910	-.133	.208	.455	-.968
30	911	-.269	.117	.073	-.802
30	912	-.285	.109	.049	-.658
30	913	-.809	.227	-.200	-1.603
40	101	-.350	.175	.500	-.873
40	102	-.709	.230	-.013	-1.581
40	103	-.582	.177	-.053	-1.299
40	104	-.527	.173	.092	-1.149
40	105	-.399	.177	.163	-.999
40	106	-.297	.133	.204	-.886
40	107	-.297	.128	.117	-.944
40	108	-.236	.122	.195	-.710
40	109	-.362	.127	.066	-.802
40	110	-.350	.142	.201	-.865
40	111	.119	.269	.910	-.979
40	112	-.159	.120	.267	-.651
40	113	-.859	.338	.004	-2.335
40	114	-.562	.172	-.036	-1.608
40	115	-.559	.168	-.053	-1.269
40	116	-.457	.130	-.084	-1.004
40	117	-.044	.152	.379	-.659
40	118	-.194	.160	.237	-.792
40	119	-.299	.186	.394	-1.055
40	120	-.224	.173	.444	-1.093
40	121	.011	.234	.806	-.835
40	122	-.331	.127	.086	-.787
40	123	-.169	.168	.376	-.797
40	124	-.291	.210	.285	-1.149
40	125	-.304	.216	.275	-1.307
40	126	-.219	.184	.253	-1.192
40	127	-.250	.185	.280	-1.024
40	128	.063	.274	.858	-.973
40	129	-.101	.173	.507	-.784
40	130	-.149	.127	.278	-.714
40	131	-.221	.173	.325	-1.344
40	132	-.216	.174	.405	-1.229
40	133	-.199	.180	.312	-1.048
40	134	-.259	.180	.378	-.932
40	135	-.238	.220	.475	-1.027
40	136	-.031	.249	.677	-.998
40	137	.038	.200	.615	-.875
40	138	-.031	.152	.437	-.723
40	139	-.096	.128	.321	-.783
40	140	-.218	.163	.316	-.821
40	141	-.204	.169	.354	-.795
40	142	-.233	.175	.322	-.837

APPENDIX A -- PRESSURE DATA: BASS BROTHERS BUILDING - PHASE II, DALLAS

WD	TAP	CPMEAN	CPRMS	CPMAX	CPMIN
40	143	-.198	.183	.342	-.796
40	144	-.240	.230	.569	-1.014
40	145	-.030	.241	.631	-1.019
40	146	.031	.191	.559	-.770
40	147	-.040	.149	.385	-.851
40	148	-.117	.128	.398	-.678
40	149	-.205	.179	.541	-.963
40	150	-.186	.177	.524	-1.086
40	151	-.166	.151	.235	-.769
40	152	-.214	.164	.346	-.907
40	153	.004	.207	.621	-.804
40	154	.025	.179	.519	-.729
40	155	.014	.176	.516	-.716
40	156	-.237	.164	.355	-.898
40	157	-.222	.180	.344	-.954
40	158	-.201	.190	.541	-.885
40	159	-.208	.196	.512	-.894
40	160	-.240	.231	.448	-1.007
40	161	-.022	.220	.618	-.917
40	162	.013	.166	.509	-.975
40	163	-.051	.138	.412	-.882
40	164	-.136	.105	.348	-.573
40	165	-.214	.175	.350	-1.154
40	166	-.211	.174	.233	-1.021
40	167	-.214	.184	.276	-.948
40	168	-.206	.160	.239	-.967
40	169	-.154	.225	.456	-1.302
40	170	-.090	.169	.544	-1.040
40	171	-.108	.127	.346	-.666
40	172	-.094	.099	.279	-.478
40	173	-.157	.113	.366	-.623
40	174	-.144	.181	.489	-.667
40	176	-.401	.160	.053	-1.343
40	177	-.180	.179	.486	-1.238
40	178	-.195	.181	.331	-1.154
40	179	-.123	.190	.612	-.670
40	180	-.133	.135	.367	-.660
40	181	-.353	.157	.219	-1.055
40	182	-.183	.166	.353	-.762
40	183	-.375	.183	.156	-1.071
40	184	-.216	.133	.187	-.851
40	185	-.181	.128	.266	-.758
40	186	-.156	.213	.372	-1.278
40	187	-.202	.159	.296	-.990
40	188	-.221	.146	.193	-.878
40	189	-.195	.151	.272	-.755
40	190	-.155	.130	.216	-1.008
40	191	.213	.127	.679	-.193
40	192	-.041	.123	.445	-.468
40	193	-.385	.237	.381	-1.426

WD	TAP	CPMEAN	CPRMS	CPMAX	CPMIN
40	194	-.188	.155	.368	-.766
40	195	-.228	.141	.249	-.722
40	196	-.171	.130	.184	-.612
40	197	-.176	.122	.185	-.712
40	198	-.288	.113	.064	-.752
40	201	-.178	.172	.523	-.720
40	202	-.164	.175	.473	-.642
40	203	-.158	.148	.399	-.606
40	204	.095	.125	.603	-.328
40	205	.200	.148	.778	-.274
40	206	.319	.162	.805	-.205
40	207	.295	.163	.797	-.268
40	208	-.085	.148	.369	-.668
40	209	.154	.164	.751	-.496
40	210	.182	.156	.734	-.316
40	211	.455	.180	1.082	-.047
40	212	.378	.162	.925	-.133
40	213	.377	.167	.901	-.159
40	214	.441	.175	1.021	-.144
40	215	.474	.190	1.104	-.174
40	216	.432	.152	.968	-.099
40	217	.412	.165	1.004	-.153
40	218	.459	.156	1.038	-.092
40	219	.323	.161	1.045	-.137
40	220	.296	.163	.854	-.326
40	221	.480	.157	.979	.027
40	222	.475	.172	1.019	-.038
40	223	.452	.178	1.016	-.096
40	224	-.226	.209	.424	-.921
40	225	.244	.136	.746	-.220
40	226	.390	.152	.929	-.108
40	227	.460	.158	1.011	-.063
40	228	.453	.157	.962	-.058
40	229	.466	.151	.950	-.025
40	230	.451	.168	.939	-.073
40	231	.415	.157	.888	-.078
40	232	.310	.146	.774	-.163
40	233	-.231	.164	.261	-.987
40	234	.183	.158	.741	-.302
40	235	.298	.157	.828	-.199
40	236	.366	.157	.881	-.107
40	237	.366	.138	.789	-.122
40	238	.370	.161	.864	-.173
40	239	.419	.124	.790	-.002
40	240	.336	.150	.917	-.114
40	241	.294	.140	.770	-.105
40	242	.350	.153	.906	-.098
40	243	.320	.145	.820	-.102
40	244	.227	.144	.727	-.185
40	245	.306	.134	.720	-.095

WD	TAP	CPMEAN	CPRMS	CPMAX	CPMIN
40	247	.357	.141	.820	-.095
40	248	-.264	.145	.362	-.839
40	249	.092	.122	.602	-.262
40	250	.267	.131	.776	-.102
40	251	.336	.133	.821	-.097
40	252	.310	.136	.806	-.117
40	253	.330	.133	.843	-.089
40	254	.333	.149	.905	-.083
40	255	.298	.148	.891	-.127
40	256	.273	.149	.866	-.196
40	257	.190	.130	.607	-.326
40	258	-.386	.209	.190	-1.102
40	259	.132	.125	.656	-.242
40	260	.239	.141	.817	-.134
40	261	.326	.147	.876	-.059
40	262	.321	.147	.890	-.059
40	263	.320	.112	.647	-.080
40	264	.268	.130	.764	-.172
40	265	.186	.135	.706	-.276
40	266	-.471	.179	.277	-1.185
40	267	-.044	.120	.388	-.499
40	268	.360	.128	.950	-.038
40	269	.365	.131	.934	-.055
40	270	.092	.129	.621	-.344
40	271	.020	.112	.429	-.355
40	272	.094	.148	.531	-.550
40	273	-.210	.180	.540	-1.095
40	274	.058	.162	.792	-.609
40	275	.223	.122	.643	-.341
40	276	.213	.133	.618	-.365
40	277	.177	.124	.570	-.394
40	278	-.506	.234	.193	-1.781
40	279	-.003	.112	.423	-.416
40	280	.243	.117	.735	-.075
40	281	.252	.114	.685	-.108
40	301	-.333	.114	.015	-.728
40	302	-.363	.127	.045	-.966
40	303	-.356	.128	.067	-.955
40	304	-.309	.101	-.008	-.731
40	305	-.332	.106	-.013	-.705
40	306	-.311	.108	.005	-.740
40	307	-.276	.099	.049	-.569
40	308	-.279	.111	.114	-.619
40	309	-.291	.113	.090	-.645
40	310	-.333	.137	.088	-1.081
40	311	-.310	.107	.116	-.769
40	312	-.307	.116	.189	-.799
40	313	-.304	.104	.060	-.685
40	314	-.301	.103	.052	-.638
40	315	-.282	.091	.015	-.591

APPENDIX A -- PRESSURE DATA:

BASS BROTHERS BUILDING - PHASE II, DALLAS

WD	TAP	CPMEAN	CPRMS	CPMAX	CPMIN
40	316	-.366	.161	.126	-1.231
40	317	-.359	.131	.096	-.902
40	318	-.353	.123	.067	-.879
40	319	-.285	.103	.064	-.799
40	320	-.275	.112	.095	-.726
40	321	-.282	.106	.067	-.656
40	322	-.291	.113	.097	-.752
40	323	-.277	.112	.100	-.700
40	324	-.333	.129	.037	-.880
40	325	-.328	.133	.019	-.937
40	326	-.334	.124	-.006	-.814
40	327	-.314	.112	-.001	-.689
40	328	-.291	.098	.027	-.639
40	329	-.288	.109	.071	-.729
40	330	-.342	.114	.023	-.779
40	331	-.314	.111	.042	-.752
40	332	-.401	.139	-.009	-1.310
40	333	-.352	.134	.045	-1.014
40	334	-.367	.136	.036	-1.174
40	335	-.348	.127	.029	-.923
40	336	-.309	.115	.008	-.842
40	337	-.382	.113	-.086	-.843
40	338	-.386	.105	-.043	-.853
40	339	-.382	.108	-.003	-.781
40	340	-.329	.120	.090	-.805
40	341	-.391	.148	.140	-1.327
40	342	-.465	.144	.092	-1.163
40	343	-.388	.135	.130	-1.049
40	344	-.356	.121	.102	-.865
40	345	-.395	.128	.084	-.877
40	346	-.454	.123	-.107	-1.057
40	347	-.372	.122	-.012	-.843
40	348	-.353	.121	.005	-.813
40	349	-.333	.162	.286	-1.593
40	350	-.343	.155	.085	-1.423
40	351	-.392	.139	.006	-1.101
40	352	-.369	.142	.046	-1.159
40	353	-.394	.139	.014	-1.016
40	354	-.496	.136	-.001	-1.178
40	355	-.328	.144	.183	-1.109
40	356	-.353	.136	.161	-1.032
40	357	-.361	.128	.089	-.953
40	358	-.483	.134	-.117	-1.034
40	359	-.363	.128	.177	-.963
40	360	-.412	.155	-.004	-1.284
40	361	-.421	.158	-.005	-1.203
40	362	-.268	.106	.085	-.689
40	363	-.317	.117	.053	-.765
40	364	-.325	.123	.121	-.817
40	365	-.318	.115	.076	-.756

WD	TAP	CPMEAN	CPRMS	CPMAX	CPMIN
40	366	-.354	.121	.042	-.900
40	401	-.417	.137	.017	-.942
40	402	-.360	.164	.145	-.961
40	403	-.283	.128	.197	-.721
40	404	-.265	.108	.061	-.745
40	405	-.282	.111	.071	-.662
40	406	-.265	.114	.135	-.702
40	407	-.283	.116	.107	-.774
40	408	-.250	.110	.058	-.674
40	409	-.209	.091	.080	-.601
40	410	-.204	.103	.119	-.641
40	411	-.221	.103	.110	-.621
40	412	-.235	.102	.075	-.635
40	413	-.234	.107	.098	-.590
40	414	-.195	.088	.110	-.466
40	415	-.194	.102	.162	-.527
40	416	-.211	.103	.160	-.548
40	417	-.213	.102	.129	-.562
40	418	-.213	.086	.105	-.503
40	419	-.215	.097	.135	-.572
40	420	-.237	.100	.136	-.579
40	421	-.253	.104	.159	-.630
40	422	-.210	.095	.084	-.561
40	423	-.261	.106	.116	-.586
40	424	-.351	.101	-.014	-.710
40	425	-.213	.106	.134	-.592
40	426	-.240	.107	.142	-.615
40	427	-.247	.107	.107	-.661
40	428	-.236	.093	.061	-.532
40	429	-.251	.111	.091	-.638
40	430	-.272	.113	.095	-.792
40	431	-.276	.112	.080	-.728
40	432	-.261	.098	.026	-.706
40	433	-.254	.110	.070	-.757
40	434	-.291	.114	.052	-.814
40	435	-.317	.117	.023	-.932
40	436	-.306	.107	.036	-.731
40	437	-.290	.119	.138	-.967
40	438	-.315	.118	.056	-.863
40	439	-.291	.117	.087	-.819
40	440	-.314	.118	.073	-.828
40	441	-.419	.120	-.043	-.856
40	442	-.342	.126	.050	-.928
40	443	-.301	.123	.101	-.788
40	444	-.326	.125	.065	-.912
40	445	-.417	.125	-.040	-.883
40	446	-.341	.129	.085	-.955
40	447	-.306	.126	.077	-.774
40	448	-.326	.127	.071	-.809
40	449	-.467	.151	-.027	-1.232

WD	TAP	CPMEAN	CPRMS	CPMAX	CPMIN
40	450	-.355	.139	.106	-.808
40	451	-.286	.130	.135	-.765
40	452	-.273	.123	.094	-.755
40	453	-.311	.130	.120	-.876
40	454	-.298	.143	.145	-.825
40	455	-.262	.141	.181	-.819
40	456	-.291	.137	.152	-.766
40	457	-.398	.136	.005	-.942
40	458	-.315	.135	.099	-.821
40	459	-.363	.138	.064	-.954
40	460	-.314	.119	.134	-.766
40	461	-.416	.117	-.087	-1.125
40	801	-.385	.142	.005	-1.116
40	802	-.333	.126	.073	-.889
40	803	-.231	.138	.263	-.694
40	804	-.440	.131	-.034	-.976
40	805	-.309	.122	.071	-.719
40	806	-.293	.125	.118	-.712
40	807	-.315	.128	.070	-.768
40	808	-.293	.146	.079	-.873
40	809	.191	.134	1.000	-.297
40	810	-.353	.143	.199	-.926
40	901	-.405	.162	.065	-1.293
40	902	-.350	.107	-.039	-.800
40	903	-.389	.141	.067	-1.017
40	904	-.334	.116	.045	-.816
40	905	-.281	.111	.205	-.802
40	906	-.331	.127	.113	-.934
40	907	-.286	.123	.122	-.768
40	908	-.398	.118	-.042	-.876
40	909	-.335	.136	.107	-.986
40	910	-.415	.150	.211	-.996
40	911	-.354	.148	.182	-1.020
40	912	-.291	.125	.219	-.739
40	913	-.486	.157	-.058	-1.420
50	101	-.461	.156	.018	-1.289
50	102	-.499	.160	-.024	-1.291
50	103	-.462	.146	-.034	-1.041
50	104	-.483	.146	-.086	-1.214
50	105	-.500	.147	-.020	-1.006
50	106	-.307	.126	.088	-.738
50	107	-.288	.126	.156	-.736
50	108	-.276	.140	.184	-.968
50	109	-.417	.125	.008	-.803
50	110	-.384	.132	.076	-.934
50	111	-.151	.235	.740	-.948
50	112	-.226	.139	.295	-.769
50	113	-.539	.194	-.022	-2.003
50	114	-.481	.153	-.020	-1.078
50	115	-.463	.151	-.011	-1.066

APPENDIX A -- PRESSURE DATA: BASS BROTHERS BUILDING - PHASE II, DALLAS

WD	TAP	CPMEAN	CPRMS	CPMAX	CPMIN
50	116	-.428	.127	-.031	-1.014
50	117	-.206	.169	.269	-.970
50	118	-.367	.175	.128	-1.098
50	119	-.459	.170	.265	-1.014
50	120	-.375	.158	.126	-.988
50	121	-.256	.183	.619	-.808
50	122	-.325	.127	.051	-.841
50	123	-.241	.143	.236	-.774
50	124	-.443	.185	.092	-1.029
50	125	-.473	.189	.061	-1.105
50	126	-.429	.168	-.048	-1.201
50	127	-.468	.190	.071	-1.307
50	128	-.204	.243	.692	-1.045
50	129	-.237	.190	.274	-.877
50	130	-.253	.167	.245	-.988
50	131	-.386	.149	.076	-1.035
50	132	-.372	.144	.146	-1.017
50	133	-.364	.152	.056	-.963
50	134	-.412	.147	.079	-1.073
50	135	-.470	.149	.097	-.999
50	136	-.377	.198	.469	-1.123
50	137	-.229	.221	.611	-.981
50	138	-.197	.196	.494	-.830
50	139	-.154	.164	.316	-.909
50	140	-.345	.137	.078	-.975
50	141	-.327	.133	.095	-.826
50	142	-.356	.140	.086	-.891
50	143	-.364	.141	.053	-1.026
50	144	-.427	.169	.177	-1.187
50	145	-.321	.230	.375	-1.066
50	146	-.178	.220	.516	-.956
50	147	-.154	.193	.448	-1.080
50	148	-.189	.192	.301	-1.297
50	149	-.347	.149	.087	-.948
50	150	-.330	.143	.083	-.866
50	151	-.325	.127	.111	-.769
50	152	-.370	.153	.256	-.909
50	153	-.254	.243	.514	-1.063
50	154	-.187	.231	.562	-.980
50	155	-.202	.232	.534	-.986
50	156	-.370	.141	.032	-.995
50	157	-.365	.154	.077	-1.144
50	158	-.351	.154	.199	-1.035
50	159	-.361	.155	.205	-1.022
50	160	-.456	.180	.321	-1.244
50	161	-.311	.238	.559	-1.098
50	162	-.177	.226	.414	-.924
50	163	-.163	.202	.339	-.986
50	164	-.169	.155	.289	-.851
50	165	-.346	.157	.163	-.973
50	166	-.356	.163	.186	-1.007
50	167	-.383	.179	.071	-1.080
50	168	-.364	.150	.092	-1.267
50	169	-.387	.203	.329	-1.294
50	170	-.246	.227	.598	-1.048
50	171	-.163	.192	.503	-1.028
50	172	-.100	.132	.288	-.738
50	173	-.140	.137	.317	-.743
50	174	-.289	.143	.176	-.915
50	176	-.258	.114	.183	-.747
50	177	-.338	.152	.140	-1.301
50	178	-.343	.154	.138	-1.167
50	179	-.335	.174	.296	-.974
50	180	-.136	.141	.409	-.679
50	181	-.268	.130	.151	-.851
50	182	-.378	.176	.081	-1.763
50	183	-.514	.209	-.025	-2.183
50	184	-.352	.141	.042	-.865
50	185	-.246	.158	.199	-.977
50	186	-.407	.251	.186	-1.642
50	187	-.367	.173	.098	-1.059
50	188	-.395	.151	.117	-1.074
50	189	-.323	.149	.215	-.913
50	190	-.273	.148	.320	-.738
50	191	.146	.139	.723	-.322
50	192	-.164	.110	.318	-.527
50	193	-.573	.241	.124	-1.641
50	194	-.320	.151	.201	-.764
50	195	-.327	.136	.155	-.740
50	196	-.277	.101	.042	-.751
50	197	-.247	.125	.156	-.855
50	198	-.259	.138	.160	-.980
50	201	.045	.186	.731	-.623
50	202	.052	.178	.627	-.609
50	203	-.056	.160	.416	-.620
50	204	.100	.137	.623	-.416
50	205	.185	.153	.711	-.385
50	206	.287	.162	.813	-.360
50	207	.213	.159	.868	-.459
50	208	.015	.148	.526	-.506
50	209	.205	.159	.727	-.321
50	210	.207	.147	.708	-.278
50	211	.406	.177	.951	-.270
50	212	.355	.153	.922	-.085
50	213	.371	.159	.958	-.070
50	214	.371	.167	.973	-.136
50	215	.295	.232	1.039	-.464
50	216	.438	.157	.977	-.051
50	217	.429	.172	.967	-.131
50	218	.466	.166	1.048	-.045
50	219	.283	.171	.886	-.285
50	220	.200	.149	.725	-.295
50	221	.443	.151	.973	.030
50	222	.438	.165	1.006	-.047
50	223	.375	.158	.950	-.112
50	224	-.052	.166	.455	-.917
50	225	.325	.146	.762	-.128
50	226	.416	.153	.947	-.022
50	227	.455	.154	1.041	-.022
50	228	.452	.155	1.032	-.020
50	229	.421	.141	.917	-.013
50	230	.378	.169	.986	-.129
50	231	.312	.145	.850	-.080
50	232	.173	.126	.660	-.184
50	233	-.128	.135	.377	-.913
50	234	.237	.148	.913	-.220
50	235	.324	.151	1.000	-.099
50	236	.371	.155	.991	-.072
50	237	.376	.128	.892	-.004
50	238	.372	.140	.952	-.097
50	239	.388	.138	.958	.006
50	240	.262	.141	.887	-.290
50	241	.185	.127	.764	-.222
50	242	.344	.165	.880	-.204
50	243	.270	.140	.808	-.144
50	244	.109	.136	.627	-.318
50	245	.274	.141	.791	-.222
50	247	.322	.148	1.023	-.074
50	248	-.200	.143	.258	-.789
50	249	.174	.131	.622	-.233
50	250	.292	.138	.784	-.139
50	251	.349	.144	.897	-.061
50	252	.321	.134	.755	-.090
50	253	.338	.130	.892	-.034
50	254	.303	.145	.884	-.144
50	255	.247	.135	.818	-.170
50	256	.205	.135	.808	-.208
50	257	.086	.126	.564	-.324
50	258	-.209	.213	.400	-1.423
50	259	.163	.115	.629	-.205
50	260	.240	.130	.766	-.158
50	261	.311	.134	.803	-.124
50	262	.302	.135	.809	-.140
50	263	.310	.103	.739	-.067
50	264	.212	.118	.638	-.175
50	265	.093	.121	.510	-.256
50	266	-.352	.234	.332	-1.242
50	267	.011	.123	.452	-.570
50	268	.344	.144	.985	-.048
50	269	.344	.149	1.071	-.050

APPENDIX A -- PRESSURE DATA:

BASS BROTHERS BUILDING - PHASE II, DALLAS

WD	TAP	CPMEAN	CPRMS	CPMAX	CPMIN
50	270	.040	.126	.480	-.459
50	271	.064	.114	.458	-.389
50	272	.080	.155	.812	-.533
50	273	-.198	.200	.261	-1.057
50	274	.073	.180	.622	-.878
50	275	.200	.126	.702	-.339
50	276	.167	.139	.741	-.631
50	277	.105	.138	.596	-.614
50	278	-.411	.240	.382	-1.720
50	279	.094	.118	.686	-.267
50	280	.293	.128	.849	-.111
50	281	.254	.123	.714	-.167
50	301	-.348	.133	.036	-1.167
50	302	-.400	.161	.039	-1.258
50	303	-.323	.143	.129	-.888
50	304	-.299	.121	.087	-.773
50	305	-.335	.138	.165	-.911
50	306	-.328	.125	.059	-.841
50	307	-.289	.108	.062	-.878
50	308	-.312	.141	.121	-.947
50	309	-.314	.133	.104	-.882
50	310	-.294	.183	.214	-1.371
50	311	-.278	.134	.280	-.867
50	312	-.279	.139	.208	-.785
50	313	-.289	.121	.121	-.800
50	314	-.301	.122	.081	-.965
50	315	-.279	.100	.110	-.713
50	316	-.314	.178	.231	-1.100
50	317	-.333	.157	.254	-1.157
50	318	-.324	.138	.228	-.883
50	319	-.264	.099	.050	-.699
50	320	-.272	.116	.139	-.723
50	321	-.284	.113	.037	-.686
50	322	-.286	.110	.113	-.731
50	323	-.271	.108	.122	-.637
50	324	-.282	.145	.100	-1.022
50	325	-.279	.154	.214	-1.309
50	326	-.292	.142	.229	-.920
50	327	-.279	.122	.212	-.827
50	328	-.315	.123	.077	-.782
50	329	-.302	.130	.111	-.947
50	330	-.350	.129	.071	-.985
50	331	-.321	.126	.161	-.869
50	332	-.354	.176	.280	-1.046
50	333	-.345	.176	.328	-.981
50	334	-.399	.193	.318	-1.238
50	335	-.386	.189	.129	-1.500
50	336	-.328	.135	.027	-.972
50	337	-.416	.152	.014	-1.336
50	338	-.418	.138	-.032	-1.102

WD	TAP	CPMEAN	CPRMS	CPMAX	CPMIN
50	339	-.405	.132	.008	-1.371
50	340	-.258	.148	.189	-.870
50	341	-.277	.176	.245	-1.159
50	342	-.235	.162	.420	-.829
50	343	-.268	.163	.434	-.869
50	344	-.292	.143	.423	-.832
50	345	-.401	.156	.066	-.956
50	346	-.357	.153	.096	-1.233
50	347	-.366	.151	.111	-1.115
50	348	-.379	.149	.089	-1.041
50	349	-.191	.158	.267	-1.243
50	350	-.172	.166	.344	-1.198
50	351	-.361	.163	.141	-1.001
50	352	-.350	.153	.072	-1.239
50	353	-.405	.162	.042	-1.219
50	354	-.395	.172	.039	-1.157
50	355	-.227	.144	.216	-.834
50	356	-.267	.155	.198	-.899
50	357	-.283	.154	.181	-1.071
50	358	-.320	.142	.093	-1.033
50	359	-.213	.137	.230	-.752
50	360	-.455	.203	.078	-1.541
50	361	-.487	.214	.011	-1.583
50	362	-.165	.108	.167	-.577
50	363	-.202	.124	.143	-.728
50	364	-.251	.138	.132	-.895
50	365	-.238	.127	.141	-.782
50	366	-.156	.117	.224	-.654
50	401	-.384	.126	-.015	-.829
50	402	-.281	.127	.176	-.770
50	403	-.242	.113	.180	-.707
50	404	-.225	.102	.091	-.669
50	405	-.265	.111	.057	-.748
50	406	-.209	.126	.204	-.741
50	407	-.229	.130	.236	-.781
50	408	-.211	.115	.194	-.733
50	409	-.187	.091	.105	-.526
50	410	-.172	.101	.155	-.509
50	411	-.186	.100	.132	-.527
50	412	-.197	.098	.133	-.537
50	413	-.208	.104	.141	-.578
50	414	-.179	.095	.125	-.655
50	415	-.161	.106	.196	-.618
50	416	-.175	.104	.174	-.596
50	417	-.173	.099	.149	-.548
50	418	-.169	.092	.135	-.472
50	419	-.163	.103	.157	-.489
50	420	-.195	.110	.156	-.570
50	421	-.214	.116	.147	-.638
50	422	-.185	.103	.103	-.582

WD	TAP	CPMEAN	CPRMS	CPMAX	CPMIN
50	423	-.216	.115	.188	-.623
50	424	-.204	.107	.107	-.542
50	425	-.164	.105	.139	-.534
50	426	-.192	.105	.108	-.561
50	427	-.194	.103	.126	-.592
50	428	-.192	.095	.104	-.629
50	429	-.209	.118	.145	-.657
50	430	-.210	.127	.170	-.835
50	431	-.204	.119	.157	-.680
50	432	-.184	.101	.168	-.643
50	433	-.186	.116	.210	-.660
50	434	-.210	.117	.178	-.701
50	435	-.306	.153	.132	-.977
50	436	-.269	.114	.079	-.743
50	437	-.234	.128	.142	-.745
50	438	-.258	.135	.117	-.853
50	439	-.279	.139	.076	-.910
50	440	-.299	.145	.068	-.930
50	441	-.247	.130	.122	-.905
50	442	-.242	.137	.150	-.798
50	443	-.228	.132	.131	-.744
50	444	-.255	.133	.149	-.772
50	445	-.256	.115	.060	-.696
50	446	-.213	.126	.176	-.659
50	447	-.214	.129	.208	-.669
50	448	-.226	.130	.159	-.682
50	449	-.321	.140	.064	-.863
50	450	-.264	.139	.201	-.768
50	451	-.215	.131	.236	-.722
50	452	-.198	.136	.221	-.888
50	453	-.197	.132	.210	-.742
50	454	-.196	.136	.209	-.770
50	455	-.191	.136	.295	-.715
50	456	-.144	.127	.277	-.683
50	457	-.184	.117	.220	-.809
50	458	-.183	.131	.256	-.876
50	459	-.263	.143	.165	-.850
50	460	-.249	.134	.142	-.772
50	461	-.265	.119	.067	-.858
50	801	-.247	.132	.188	-.860
50	802	-.289	.140	.164	-.811
50	803	-.283	.149	.274	-.925
50	804	-.268	.122	.091	-.887
50	805	-.190	.115	.169	-.634
50	806	-.198	.121	.186	-.722
50	807	-.259	.133	.131	-.844
50	808	-.288	.136	.096	-.847
50	809	.180	.120	.670	-.209
50	810	-.333	.173	.271	-1.314
50	901	-.287	.179	.331	-1.235

APPENDIX A -- PRESSURE DATA:

BASS BROTHERS BUILDING - PHASE II, DALLAS

WD	TAP	CPMEAN	CPRMS	CPMAX	CPMIN
50	902	-.346	.118	-.026	-.824
50	903	-.340	.142	.114	-1.051
50	904	-.301	.121	.088	-.788
50	905	-.301	.117	.132	-.831
50	906	-.344	.148	.087	-1.145
50	907	-.304	.122	.067	-.851
50	908	-.368	.126	.047	-.875
50	909	-.311	.112	.037	-.927
50	910	-.400	.139	.031	-1.090
50	911	-.303	.148	.700	-.807
50	912	-.259	.135	.593	-.778
50	913	-.381	.114	-.026	-.766
60	101	-.469	.156	-.020	-1.249
60	102	-.436	.146	-.011	-1.067
60	103	-.411	.138	.036	-.929
60	104	-.443	.138	.006	-.938
60	105	-.446	.128	-.041	-.946
60	106	-.287	.126	.112	-.796
60	107	-.255	.126	.142	-.830
60	108	-.332	.150	.210	-1.113
60	109	-.445	.128	-.034	-.935
60	110	-.416	.130	-.017	-.893
60	111	-.335	.156	.385	-1.020
60	112	-.349	.158	.150	-1.224
60	113	-.461	.157	-.028	-1.741
60	114	-.441	.152	-.010	-.988
60	115	-.419	.146	-.005	-.906
60	116	-.422	.124	-.083	-1.000
60	117	-.239	.150	.314	-.874
60	118	-.381	.138	.050	-.875
60	119	-.434	.143	.021	-1.043
60	120	-.386	.135	.048	-.872
60	121	-.357	.133	-.001	-.824
60	122	-.343	.129	.100	-1.069
60	123	-.309	.155	.265	-.980
60	124	-.396	.131	.013	-.851
60	125	-.425	.132	.011	-.903
60	126	-.427	.127	-.075	-.916
60	127	-.430	.149	-.007	-1.255
60	128	-.333	.151	.488	-1.040
60	129	-.344	.148	.216	-.904
60	130	-.348	.152	.134	-1.054
60	131	-.364	.116	.010	-.787
60	132	-.339	.112	.026	-.741
60	133	-.378	.129	.016	-.889
60	134	-.372	.115	.021	-.732
60	135	-.411	.132	.005	-.970
60	136	-.412	.152	.042	-.994
60	137	-.349	.160	.269	-.958
60	138	-.345	.170	.232	-.959

WD	TAP	CPMEAN	CPRMS	CPMAX	CPMIN
60	139	-.321	.190	.289	-1.254
60	140	-.368	.123	-.008	-.994
60	141	-.342	.119	.009	-.796
60	142	-.371	.124	-.008	-.839
60	143	-.378	.121	.025	-.793
60	144	-.413	.133	.008	-.949
60	145	-.429	.160	.171	-1.200
60	146	-.366	.173	.285	-1.094
60	147	-.361	.190	.275	-.972
60	148	-.330	.191	.336	-1.242
60	149	-.373	.132	-.008	-.945
60	150	-.347	.125	.009	-.815
60	151	-.350	.105	-.017	-.757
60	152	-.368	.125	-.021	-.906
60	153	-.370	.162	.351	-1.042
60	154	-.313	.160	.347	-.871
60	155	-.334	.162	.352	-.884
60	156	-.389	.140	.011	-.991
60	157	-.405	.150	.018	-.939
60	158	-.346	.135	.069	-.875
60	159	-.350	.139	.063	-.891
60	160	-.406	.143	.078	-.949
60	161	-.389	.163	.213	-.917
60	162	-.296	.175	.347	-.934
60	163	-.286	.177	.311	-.949
60	164	-.261	.169	.261	-1.065
60	165	-.397	.142	.005	-1.141
60	166	-.405	.147	.030	-1.355
60	167	-.437	.159	.018	-1.264
60	168	-.388	.129	.035	-1.063
60	169	-.426	.173	.087	-1.595
60	170	-.336	.202	.438	-1.203
60	171	-.235	.199	.403	-1.265
60	172	-.195	.158	.352	-.822
60	173	-.205	.163	.373	-.887
60	174	-.333	.131	.134	-.847
60	176	-.238	.120	.199	-.688
60	177	-.395	.136	.040	-1.083
60	178	-.395	.136	.040	-1.025
60	179	-.411	.142	.220	-.884
60	180	-.215	.157	.400	-1.022
60	181	-.252	.134	.189	-.780
60	182	-.397	.142	.040	-1.033
60	183	-.473	.175	.009	-1.437
60	184	-.378	.130	.035	-1.004
60	185	-.322	.161	.202	-1.148
60	186	-.559	.257	.156	-2.095
60	187	-.447	.177	.068	-1.287
60	188	-.424	.136	.017	-1.197
60	189	-.334	.130	.079	-.915

WD	TAP	CPMEAN	CPRMS	CPMAX	CPMIN
60	190	-.315	.136	.126	-.942
60	191	.071	.149	.624	-.424
60	192	-.172	.104	.352	-.604
60	193	-.521	.207	.071	-1.565
60	194	-.345	.137	.094	-.951
60	195	-.337	.120	.066	-.819
60	196	-.294	.105	.043	-.785
60	197	-.290	.127	.099	-.802
60	198	-.315	.149	.113	-.894
60	201	.226	.197	.887	-.654
60	202	.225	.189	.920	-.535
60	203	.040	.170	.634	-.526
60	204	.134	.127	.628	-.240
60	205	.175	.137	.696	-.299
60	206	.254	.140	.772	-.219
60	207	.159	.135	.716	-.303
60	208	.154	.166	.740	-.543
60	209	.258	.169	.827	-.400
60	210	.238	.156	.751	-.281
60	211	.362	.202	1.020	-.336
60	212	.374	.158	.872	-.323
60	213	.357	.165	.897	-.348
60	214	.299	.160	.817	-.347
60	215	.096	.215	.863	-.561
60	216	.465	.146	.956	.063
60	217	.457	.164	1.067	-.005
60	218	.481	.161	1.207	.056
60	219	.275	.177	.948	-.319
60	220	.186	.176	.946	-.423
60	221	.479	.149	.989	-.028
60	222	.458	.164	1.066	-.063
60	223	.321	.194	.924	-.297
60	224	.079	.148	.545	-.426
60	225	.367	.154	.909	-.130
60	226	.414	.167	.974	-.111
60	227	.437	.168	.999	-.069
60	228	.428	.169	1.002	-.084
60	229	.422	.150	1.016	.003
60	230	.353	.182	.986	-.143
60	231	.255	.149	.789	-.203
60	232	.097	.131	.498	-.272
60	233	-.001	.132	.475	-.469
60	234	.314	.160	.919	-.197
60	235	.362	.155	.930	-.148
60	236	.386	.151	.919	-.103
60	237	.391	.136	.836	-.039
60	238	.375	.147	.856	-.121
60	239	.376	.130	.876	.027
60	240	.226	.130	.709	-.201
60	241	.116	.115	.490	-.299

APPENDIX A -- PRESSURE DATA: BASS BROTHERS BUILDING - PHASE II, DALLAS

WD	TAP	CPMEAN	CPRMS	CPMAX	CPMIN
60	242	.279	.156	.762	-.282
60	243	.197	.131	.644	-.266
60	244	.042	.125	.531	-.433
60	245	.212	.133	.699	-.141
60	247	.300	.148	.840	-.113
60	248	-.090	.148	.450	-.651
60	249	.244	.123	.679	-.246
60	250	.322	.129	.824	-.080
60	251	.384	.148	.956	-.011
60	252	.326	.131	.849	-.103
60	253	.318	.128	.894	-.060
60	254	.238	.136	.798	-.182
60	255	.160	.122	.721	-.228
60	256	.103	.120	.667	-.265
60	257	.015	.110	.435	-.349
60	258	-.040	.180	.675	-.819
60	259	.227	.116	.714	-.104
60	260	.278	.133	.771	-.098
60	261	.337	.138	.826	-.050
60	262	.328	.138	.835	-.062
60	263	.325	.115	.827	-.013
60	264	.187	.126	.837	-.206
60	265	.039	.124	.675	-.393
60	266	-.210	.233	.414	-1.074
60	267	.094	.130	.717	-.323
60	268	.381	.150	1.106	-.047
60	269	.358	.144	.959	-.066
60	270	-.027	.114	.519	-.356
60	271	.107	.132	.578	-.548
60	272	.059	.166	.614	-.725
60	273	-.144	.211	.381	-1.175
60	274	.124	.196	.720	-.800
60	275	.214	.130	.708	-.296
60	276	.158	.147	.810	-.490
60	277	.063	.150	.583	-.664
60	278	-.335	.245	.347	-1.498
60	279	.151	.124	.790	-.208
60	280	.302	.133	.904	-.174
60	281	.223	.131	.858	-.202
60	301	-.421	.153	.027	-.979
60	302	-.523	.197	.024	-1.450
60	303	-.261	.140	.141	-.926
60	304	-.232	.123	.226	-.686
60	305	-.282	.154	.326	-.836
60	306	-.373	.164	.217	-1.340
60	307	-.346	.123	-.022	-.824
60	308	-.390	.195	.441	-1.242
60	309	-.368	.188	.208	-1.466
60	310	-.208	.131	.213	-.800
60	311	-.137	.167	.559	-1.096
60	312	-.178	.197	.712	-1.128
60	313	-.315	.163	.422	-1.089
60	314	-.360	.155	.210	-1.026
60	315	-.331	.115	.083	-.765
60	316	-.234	.176	.271	-1.139
60	317	-.259	.199	.604	-1.040
60	318	-.276	.186	.481	-.904
60	319	-.243	.136	.321	-.722
60	320	-.315	.156	.282	-.916
60	321	-.314	.144	.114	-.900
60	322	-.326	.126	.197	-.792
60	323	-.308	.123	.124	-.731
60	324	-.199	.132	.214	-1.075
60	325	-.161	.201	.450	-.991
60	326	-.195	.213	.588	-.935
60	327	-.232	.175	.491	-.858
60	328	-.324	.169	.270	-1.036
60	329	-.337	.170	.167	-1.232
60	330	-.387	.162	.023	-1.144
60	331	-.360	.156	.044	-1.044
60	332	-.257	.164	.336	-.882
60	333	-.192	.208	.430	-1.003
60	334	-.251	.245	.429	-1.105
60	335	-.276	.242	.416	-1.336
60	336	-.306	.174	.189	-1.109
60	337	-.448	.192	.047	-1.316
60	338	-.451	.162	.038	-1.184
60	339	-.441	.162	-.006	-1.651
60	340	-.171	.133	.188	-1.096
60	341	-.173	.134	.272	-.714
60	342	-.174	.160	.452	-.755
60	343	-.121	.174	.535	-.771
60	344	-.152	.149	.374	-.692
60	345	-.339	.177	.205	-1.062
60	346	-.438	.185	.177	-1.260
60	347	-.364	.165	.277	-1.124
60	348	-.341	.156	.129	-1.030
60	349	-.126	.122	.347	-.644
60	350	-.057	.131	.476	-.539
60	351	-.259	.186	.426	-1.066
60	352	-.218	.150	.237	-.843
60	353	-.349	.185	.226	-1.149
60	354	-.516	.193	-.018	-1.470
60	355	-.163	.122	.293	-.622
60	356	-.169	.136	.177	-.837
60	357	-.239	.150	.204	-.903
60	358	-.421	.155	.005	-1.047
60	359	-.126	.134	.246	-.662
60	360	-.357	.216	.271	-1.205
60	361	-.449	.212	.137	-1.243
60	362	-.140	.100	.172	-.473
60	363	-.206	.113	.175	-.617
60	364	-.216	.130	.154	-.860
60	365	-.255	.120	.196	-.689
60	366	-.143	.127	.238	-.630
60	401	-.361	.121	.068	-.768
60	402	-.253	.113	.146	-.633
60	403	-.235	.113	.138	-.688
60	404	-.235	.092	.117	-.594
60	405	-.272	.115	.135	-.682
60	406	-.184	.114	.244	-.628
60	407	-.201	.118	.215	-.697
60	408	-.234	.116	.167	-.707
60	409	-.195	.094	.076	-.599
60	410	-.175	.102	.115	-.590
60	411	-.189	.100	.108	-.536
60	412	-.196	.100	.103	-.524
60	413	-.184	.102	.200	-.620
60	414	-.236	.118	.095	-.673
60	415	-.185	.114	.150	-.577
60	416	-.187	.107	.131	-.575
60	417	-.176	.102	.128	-.549
60	418	-.162	.081	.079	-.442
60	419	-.153	.096	.147	-.528
60	420	-.191	.112	.162	-.639
60	421	-.196	.118	.177	-.684
60	422	-.227	.129	.140	-.928
60	423	-.233	.122	.171	-.670
60	424	-.294	.105	.067	-.882
60	425	-.142	.099	.230	-.531
60	426	-.172	.100	.171	-.521
60	427	-.172	.098	.143	-.524
60	428	-.182	.107	.140	-.791
60	429	-.177	.129	.210	-.874
60	430	-.234	.140	.262	-.838
60	431	-.206	.122	.186	-.715
60	432	-.179	.099	.124	-.569
60	433	-.174	.108	.143	-.605
60	434	-.188	.107	.139	-.659
60	435	-.284	.138	.071	-.929
60	436	-.260	.118	.071	-.732
60	437	-.205	.137	.176	-.782
60	438	-.261	.123	.069	-.768
60	439	-.248	.125	.076	-.880
60	440	-.281	.128	.050	-.981
60	441	-.290	.109	.054	-.801
60	442	-.218	.111	.093	-.700
60	443	-.139	.102	.228	-.555
60	444	-.183	.104	.165	-.570
60	445	-.265	.108	.061	-.741

APPENDIX A -- PRESSURE DATA:

BASS BROTHERS BUILDING - PHASE II, DALLAS

WD	TAP	CPMEAN	CPRMS	CPMAX	CPMIN
60	446	-.161	.110	.154	-.672
60	447	-.144	.118	.237	-.650
60	448	-.166	.121	.185	-.689
60	449	-.338	.123	.035	-.895
60	450	-.223	.121	.107	-.717
60	451	-.118	.106	.263	-.512
60	452	-.137	.127	.302	-.926
60	453	-.169	.124	.213	-.637
60	454	-.165	.127	.236	-.716
60	455	-.104	.124	.499	-.550
60	456	-.140	.125	.263	-.608
60	457	-.244	.116	.140	-.873
60	458	-.178	.127	.216	-.791
60	459	-.228	.131	.129	-.789
60	460	-.247	.128	.149	-.796
60	461	-.278	.113	.065	-.893
60	801	-.306	.142	.179	-.911
60	802	-.233	.129	.241	-.806
60	803	-.335	.159	.251	-1.003
60	804	-.283	.117	.085	-.788
60	805	-.174	.107	.174	-.673
60	806	-.140	.111	.220	-.615
60	807	-.283	.130	.124	-.752
60	808	-.381	.118	-.014	-.928
60	809	.106	.132	.620	-.342
60	810	-.270	.173	.253	-.971
60	901	-.147	.188	.406	-.804
60	902	-.298	.149	.112	-.961
60	903	-.394	.130	-.012	-.872
60	904	-.358	.129	.021	-.805
60	905	-.278	.140	.207	-1.034
60	906	-.302	.145	.158	-.979
60	907	-.295	.126	.051	-.815
60	908	-.327	.121	.063	-.832
60	909	-.270	.091	.010	-.649
60	910	-.340	.125	.014	-.859
60	911	-.297	.127	.084	-.833
60	912	-.288	.132	.127	-.763
60	913	-.310	.109	.036	-.679
70	101	-.354	.126	.024	-.944
70	102	-.393	.129	.006	-.884
70	103	-.385	.128	.005	-.888
70	104	-.409	.127	-.033	-.883
70	105	-.328	.109	.003	-.729
70	106	-.279	.119	.116	-.700
70	107	-.257	.115	.136	-.684
70	108	-.374	.140	.043	-1.351
70	109	-.339	.107	.021	-.704
70	110	-.382	.114	.010	-.797
70	111	-.354	.120	.034	-.841

WD	TAP	CPMEAN	CPRMS	CPMAX	CPMIN
70	112	-.383	.133	.061	-1.050
70	113	-.365	.135	.021	-.913
70	114	-.433	.147	.039	-1.121
70	115	-.428	.144	-.034	-1.095
70	116	-.373	.108	-.035	-.789
70	117	-.291	.136	.159	-.761
70	118	-.344	.121	.043	-.765
70	119	-.396	.119	.067	-.815
70	120	-.366	.116	.028	-.769
70	121	-.370	.112	.000	-.778
70	122	-.291	.112	.045	-.724
70	123	-.346	.127	.154	-.857
70	124	-.354	.114	.030	-.796
70	125	-.372	.115	.003	-.802
70	126	-.329	.094	-.055	-.711
70	127	-.393	.125	.007	-1.028
70	128	-.373	.123	.009	-.868
70	129	-.388	.124	.013	-.993
70	130	-.311	.119	.056	-1.031
70	131	-.349	.107	.010	-.701
70	132	-.339	.102	-.006	-.672
70	133	-.330	.101	.002	-.702
70	134	-.356	.105	-.015	-.701
70	135	-.325	.106	.017	-.733
70	136	-.405	.123	-.011	-.820
70	137	-.407	.133	-.014	-.908
70	138	-.431	.144	-.034	-1.044
70	139	-.380	.145	.073	-1.001
70	140	-.363	.109	-.026	-.738
70	141	-.350	.105	-.025	-.702
70	142	-.366	.107	-.030	-.735
70	143	-.359	.102	-.037	-.798
70	144	-.307	.103	.003	-.710
70	145	-.386	.119	-.029	-.788
70	146	-.385	.125	.036	-1.018
70	147	-.407	.136	.086	-1.004
70	148	-.344	.142	.182	-1.244
70	149	-.378	.120	.047	-.821
70	150	-.366	.114	.021	-.811
70	151	-.342	.083	-.089	-.661
70	152	-.379	.124	.083	-.777
70	153	-.396	.125	.033	-.877
70	154	-.379	.122	.021	-.827
70	155	-.397	.123	.006	-.848
70	156	-.310	.107	.056	-.719
70	157	-.382	.122	.033	-.838
70	158	-.328	.114	.011	-.799
70	159	-.325	.113	.009	-.827
70	160	-.339	.108	-.015	-.755
70	161	-.421	.123	-.049	-.910

WD	TAP	CPMEAN	CPRMS	CPMAX	CPMIN
70	162	-.403	.127	.079	-.841
70	163	-.408	.131	.088	-.866
70	164	-.316	.141	.204	-.839
70	165	-.391	.116	-.044	-.925
70	166	-.390	.117	-.040	-.953
70	167	-.411	.122	-.053	-1.024
70	168	-.357	.100	-.023	-.731
70	169	-.402	.125	-.001	-.894
70	170	-.402	.138	.030	-1.216
70	171	-.383	.151	.341	-1.138
70	172	-.267	.135	.228	-.977
70	173	-.274	.151	.215	-1.060
70	174	-.346	.122	.042	-.824
70	176	-.282	.119	.155	-.708
70	177	-.387	.112	-.078	-.800
70	178	-.376	.109	-.062	-.769
70	179	-.404	.112	-.085	-.784
70	180	-.298	.126	.102	-.824
70	181	-.346	.134	.141	-.824
70	182	-.402	.128	.025	-.925
70	183	-.430	.136	-.009	-1.183
70	184	-.331	.101	-.017	-.757
70	185	-.353	.122	.047	-.883
70	186	-.587	.233	-.090	-2.083
70	187	-.468	.154	.044	-1.240
70	188	-.402	.134	-.027	-1.024
70	189	-.341	.126	.096	-1.007
70	190	-.333	.124	.094	-.812
70	191	-.039	.173	.607	-.696
70	192	-.183	.095	.186	-.580
70	193	-.505	.206	-.056	-1.698
70	194	-.362	.135	.123	-.998
70	195	-.351	.122	.097	-.804
70	196	-.294	.089	-.006	-.624
70	197	-.314	.109	.195	-.731
70	198	-.337	.149	.131	-.874
70	201	.294	.227	1.072	-.720
70	202	.198	.218	1.002	-.451
70	203	.134	.195	.889	-.550
70	204	.162	.125	.650	-.310
70	205	.138	.143	.641	-.357
70	206	.188	.138	.684	-.279
70	207	.076	.128	.522	-.428
70	208	.305	.156	.858	-.261
70	209	.286	.154	.861	-.303
70	210	.256	.144	.791	-.301
70	211	.273	.209	.917	-.508
70	212	.377	.159	.973	-.095
70	213	.334	.173	1.021	-.181
70	214	.163	.168	.825	-.405

APPENDIX A -- PRESSURE DATA:

BASS BROTHERS BUILDING - PHASE II, DALLAS

WD	TAP	CPMEAN	CPRMS	CPMAX	CPMIN
70	215	-.104	.170	.672	-.582
70	216	.447	.147	.950	-.050
70	217	.431	.164	.962	-.169
70	218	.450	.160	1.008	-.099
70	219	.202	.188	.863	-.491
70	220	.148	.153	.831	-.404
70	221	.468	.156	1.062	.010
70	222	.418	.169	1.038	-.059
70	223	.202	.160	.699	-.566
70	224	.220	.163	.730	-.236
70	225	.421	.140	.919	-.023
70	226	.430	.149	.982	-.051
70	227	.440	.149	.961	-.046
70	228	.419	.148	.923	-.034
70	229	.387	.136	.941	-.008
70	230	.284	.180	.980	-.277
70	231	.173	.133	.811	-.224
70	232	.018	.114	.519	-.334
70	233	.149	.150	.710	-.349
70	234	.342	.152	.889	-.145
70	235	.359	.149	.882	-.159
70	236	.372	.148	.897	-.005
70	237	.379	.122	.840	.039
70	238	.338	.130	.823	-.114
70	239	.315	.120	.744	-.080
70	240	.140	.119	.568	-.299
70	241	.053	.105	.468	-.307
70	242	.253	.159	.795	-.186
70	243	.136	.120	.696	-.250
70	244	-.038	.113	.530	-.392
70	245	.136	.126	.556	-.218
70	247	.228	.143	.774	-.281
70	248	.063	.164	.604	-.482
70	249	.301	.130	.768	-.115
70	250	.326	.140	.814	-.125
70	251	.366	.145	.931	-.101
70	252	.303	.137	.856	-.185
70	253	.305	.122	.747	-.061
70	254	.207	.139	.714	-.331
70	255	.117	.123	.598	-.344
70	256	.057	.122	.516	-.413
70	257	-.066	.103	.306	-.432
70	258	.117	.155	.719	-.442
70	259	.255	.110	.658	-.114
70	260	.264	.126	.728	-.144
70	261	.304	.127	.797	-.087
70	262	.285	.127	.776	-.078
70	263	.285	.101	.637	.004
70	264	.120	.110	.548	-.243
70	265	-.022	.109	.453	-.379
70	266	-.009	.186	.679	-.749
70	267	.158	.109	.525	-.234
70	268	.353	.134	1.072	-.079
70	269	.317	.131	.902	-.168
70	270	-.096	.116	.275	-.553
70	271	.160	.117	.566	-.443
70	272	.012	.157	.558	-.672
70	273	.002	.181	.546	-.761
70	274	.174	.169	.681	-.529
70	275	.168	.140	.621	-.430
70	276	.086	.161	.618	-.636
70	277	-.036	.170	.493	-.809
70	278	-.102	.223	.451	-1.006
70	279	.197	.103	.691	-.136
70	280	.266	.118	.836	-.067
70	281	.166	.114	.738	-.203
70	301	-.383	.154	.032	-.935
70	302	-.653	.217	-.080	-1.644
70	303	-.256	.129	.119	-.768
70	304	-.219	.117	.190	-.633
70	305	-.198	.157	.299	-.726
70	306	-.236	.173	.293	-.891
70	307	-.270	.141	.138	-.826
70	308	-.191	.219	.580	-1.183
70	309	-.225	.213	.412	-1.357
70	310	-.221	.120	.158	-.720
70	311	-.003	.152	.486	-.595
70	312	-.002	.202	.757	-.681
70	313	-.089	.204	.483	-1.039
70	314	-.180	.189	.434	-1.432
70	315	-.190	.137	.244	-.716
70	316	-.213	.131	.244	-.754
70	317	-.022	.180	.557	-.774
70	318	.045	.227	.831	-.787
70	319	-.028	.198	.520	-.652
70	320	-.148	.227	.432	-.917
70	321	-.207	.185	.384	-.871
70	322	-.263	.150	.369	-.718
70	323	-.249	.143	.341	-.704
70	324	-.190	.111	.156	-.637
70	325	.011	.160	.596	-.669
70	326	.049	.202	.882	-.809
70	327	.024	.204	.705	-.616
70	328	-.121	.186	.390	-.902
70	329	-.205	.191	.326	-1.247
70	330	-.294	.163	.299	-1.470
70	331	-.275	.151	.174	-1.411
70	332	-.253	.117	.144	-.895
70	333	-.027	.147	.464	-.672
70	334	-.008	.185	.517	-1.023
70	335	-.013	.190	.507	-.984
70	336	-.111	.173	.402	-.643
70	337	-.226	.207	.300	-1.038
70	338	-.235	.172	.316	-.968
70	339	-.290	.206	.277	-1.428
70	340	-.234	.109	.138	-.605
70	341	-.249	.132	.206	-1.030
70	342	-.017	.130	.504	-.513
70	343	-.040	.168	.621	-.661
70	344	-.090	.164	.437	-.722
70	345	-.189	.193	.400	-1.110
70	346	-.095	.174	.359	-1.097
70	347	-.223	.177	.356	-1.193
70	348	-.258	.171	.183	-1.305
70	349	-.170	.122	.359	-.754
70	350	-.094	.128	.393	-.626
70	351	-.125	.184	.362	-.788
70	352	-.181	.148	.211	-.689
70	353	-.268	.190	.246	-1.248
70	354	-.177	.198	.348	-1.105
70	355	-.140	.107	.286	-.539
70	356	-.137	.117	.258	-.626
70	357	-.148	.137	.274	-.769
70	358	-.183	.157	.290	-.890
70	359	-.044	.123	.357	-.568
70	360	-.232	.220	.356	-1.264
70	361	-.289	.226	.245	-1.704
70	362	-.086	.088	.175	-.406
70	363	-.163	.104	.172	-.553
70	364	-.167	.125	.192	-.809
70	365	-.242	.137	.156	-.651
70	366	.107	.116	.480	-.358
70	401	-.365	.106	-.054	-.788
70	402	-.295	.110	.139	-.684
70	403	-.275	.106	.088	-.624
70	404	-.285	.092	.018	-.637
70	405	-.292	.110	.127	-.715
70	406	-.193	.101	.189	-.624
70	407	-.216	.106	.172	-.702
70	408	-.278	.106	.075	-.638
70	409	-.217	.089	.032	-.549
70	410	-.192	.097	.098	-.546
70	411	-.213	.097	.074	-.535
70	412	-.216	.098	.085	-.538
70	413	-.249	.097	.118	-.594
70	414	-.279	.101	.084	-.645
70	415	-.222	.107	.127	-.622
70	416	-.228	.107	.109	-.671
70	417	-.210	.103	.105	-.582
70	418	-.183	.084	.093	-.513

APPENDIX A -- PRESSURE DATA: BASS BROTHERS BUILDING - PHASE II, DALLAS

WD	TAP	CPMEAN	CPRMS	CPMAX	CPMIN
70	419	-.171	.095	.152	-.518
70	420	-.201	.102	.129	-.600
70	421	-.195	.103	.136	-.600
70	422	-.281	.102	.048	-.645
70	423	-.282	.103	.082	-.668
70	424	-.151	.092	.118	-.475
70	425	-.163	.091	.119	-.494
70	426	-.191	.092	.104	-.515
70	427	-.177	.093	.110	-.516
70	428	-.151	.095	.157	-.531
70	429	-.143	.109	.253	-.635
70	430	-.285	.135	.154	-.995
70	431	-.230	.115	.133	-.680
70	432	-.201	.090	.063	-.483
70	433	-.199	.104	.192	-.545
70	434	-.196	.104	.144	-.582
70	435	-.226	.113	.079	-.664
70	436	-.191	.089	.092	-.609
70	437	-.159	.099	.183	-.581
70	438	-.292	.124	.152	-.849
70	439	-.324	.123	.079	-.778
70	440	-.314	.125	.067	-.763
70	441	-.146	.107	.178	-.671
70	442	-.204	.117	.152	-.689
70	443	-.190	.108	.174	-.520
70	444	-.209	.104	.150	-.557
70	445	-.126	.104	.238	-.574
70	446	-.196	.118	.238	-.752
70	447	-.222	.119	.241	-.713
70	448	-.209	.121	.255	-.670
70	449	-.215	.111	.125	-.633
70	450	-.230	.130	.248	-.621
70	451	-.187	.117	.303	-.637
70	452	-.131	.110	.295	-.519
70	453	-.194	.112	.189	-.710
70	454	-.202	.112	.177	-.646
70	455	-.199	.117	.268	-.636
70	456	-.177	.113	.208	-.800
70	457	-.155	.102	.205	-.530
70	458	-.229	.119	.172	-.876
70	459	-.290	.139	.209	-.784
70	460	-.284	.131	.162	-.727
70	461	-.159	.106	.270	-.512
70	801	-.359	.139	.152	-.823
70	802	-.332	.144	.095	-.898
70	803	-.407	.137	-.012	-1.222
70	804	-.115	.098	.215	-.529
70	805	-.117	.106	.241	-.561
70	806	-.082	.121	.279	-.619
70	807	-.352	.143	.162	-.895

WD	TAP	CPMEAN	CPRMS	CPMAX	CPMIN
70	808	-.271	.106	.103	-.699
70	809	-.008	.154	.762	-.466
70	810	-.043	.178	.542	-.708
70	901	-.003	.158	.619	-.697
70	902	-.085	.142	.342	-.839
70	903	-.425	.137	-.046	-1.011
70	904	-.365	.128	.089	-.940
70	905	-.300	.139	.110	-1.059
70	906	-.329	.137	.169	-.976
70	907	-.337	.129	.066	-.947
70	908	-.375	.124	.027	-.942
70	909	-.265	.087	.062	-.599
70	910	-.342	.123	.054	-.917
70	911	-.303	.112	.073	-.765
70	912	-.314	.119	.071	-.782
70	913	-.294	.094	.004	-.626
80	101	-.379	.113	-.044	-.776
80	102	-.441	.129	.028	-.929
80	103	-.451	.126	-.071	-.898
80	104	-.454	.121	-.097	-.937
80	105	-.338	.111	.057	-.746
80	106	-.297	.123	.152	-.657
80	107	-.289	.122	.102	-.685
80	108	-.439	.136	-.037	-1.055
80	109	-.376	.117	.035	-.731
80	110	-.431	.128	-.022	-.847
80	111	-.419	.130	-.019	-.836
80	112	-.446	.136	-.042	-.950
80	113	-.499	.170	-.041	-1.353
80	114	-.588	.176	-.097	-1.296
80	115	-.591	.183	-.088	-1.426
80	116	-.419	.124	-.015	-.960
80	117	-.306	.154	.178	-.956
80	118	-.309	.137	.160	-.738
80	119	-.413	.122	-.020	-.904
80	120	-.417	.118	-.045	-.858
80	121	-.434	.123	-.065	-.903
80	122	-.357	.111	.023	-.784
80	123	-.379	.126	.177	-.829
80	124	-.368	.124	.121	-.825
80	125	-.386	.121	.071	-.847
80	126	-.273	.095	.087	-.607
80	127	-.400	.115	-.017	-.799
80	128	-.430	.123	-.019	-.883
80	129	-.447	.124	-.050	-1.046
80	130	-.370	.114	-.053	-.858
80	131	-.339	.120	.174	-.812
80	132	-.347	.115	.120	-.819
80	133	-.278	.115	.229	-.648
80	134	-.364	.117	.171	-.832

WD	TAP	CPMEAN	CPRMS	CPMAX	CPMIN
80	135	-.302	.103	.054	-.630
80	136	-.382	.120	.077	-.807
80	137	-.379	.130	.355	-.798
80	138	-.372	.136	.383	-.845
80	139	-.300	.154	.609	-1.086
80	140	-.313	.134	.257	-.672
80	141	-.319	.128	.219	-.671
80	142	-.322	.139	.393	-.684
80	143	-.261	.128	.200	-.702
80	144	-.269	.117	.145	-.624
80	145	-.351	.134	.148	-.770
80	146	-.344	.155	.337	-.836
80	147	-.334	.173	.331	-.818
80	148	-.266	.169	.578	-.833
80	149	-.322	.142	.194	-.770
80	150	-.329	.134	.131	-.736
80	151	-.233	.099	.236	-.540
80	152	-.312	.124	.205	-.806
80	153	-.366	.122	.126	-.759
80	154	-.360	.122	.200	-.740
80	155	-.369	.126	.174	-.773
80	156	-.272	.111	.163	-.677
80	157	-.344	.123	.136	-.798
80	158	-.286	.126	.227	-.707
80	159	-.283	.122	.153	-.701
80	160	-.309	.104	.017	-.714
80	161	-.399	.121	.118	-.865
80	162	-.390	.135	.271	-.837
80	163	-.395	.143	.418	-.913
80	164	-.316	.147	.396	-.898
80	165	-.293	.112	.136	-.714
80	166	-.296	.112	.148	-.785
80	167	-.323	.113	.126	-.765
80	168	-.282	.103	.061	-.755
80	169	-.338	.128	.103	-1.045
80	170	-.356	.135	.068	-.957
80	171	-.372	.140	.166	-1.138
80	172	-.329	.121	.178	-.833
80	173	-.358	.157	.154	-1.117
80	174	-.312	.112	.040	-.672
80	176	-.258	.097	.052	-.687
80	177	-.302	.122	.167	-.776
80	178	-.288	.124	.206	-.773
80	179	-.325	.128	.202	-.886
80	180	-.306	.104	.015	-.698
80	181	-.328	.129	.102	-.834
80	182	-.349	.127	.109	-.968
80	183	-.359	.124	.073	-.990
80	184	-.283	.097	-.015	-.666
80	185	-.319	.115	.029	-.791

APPENDIX A -- PRESSURE DATA: BASS BROTHERS BUILDING - PHASE II, DALLAS

WD	TAP	CPMEAN	CPRMS	CPMAX	CPMIN
80	186	-.454	.240	.125	-1.568
80	187	-.399	.165	.069	-1.108
80	188	-.290	.121	.099	-.811
80	189	-.292	.122	.134	-.717
80	190	-.298	.128	.145	-.743
80	191	-.136	.148	.442	-.636
80	192	-.148	.088	.177	-.489
80	193	-.373	.155	.050	-1.394
80	194	-.305	.120	.077	-.779
80	195	-.300	.112	.093	-.753
80	196	-.279	.097	.044	-.631
80	197	-.312	.117	.057	-.728
80	198	-.319	.129	.141	-.824
80	201	.360	.208	1.256	-.450
80	202	.246	.223	1.068	-.431
80	203	.215	.203	1.100	-.386
80	204	.139	.128	.644	-.354
80	205	.043	.149	.646	-.408
80	206	.089	.137	.595	-.357
80	207	-.024	.124	.451	-.396
80	208	.411	.158	.899	-.187
80	209	.274	.150	.805	-.173
80	210	.271	.143	.782	-.164
80	211	-.057	.252	.850	-.613
80	212	.354	.170	.979	-.124
80	213	.297	.179	1.007	-.229
80	214	.014	.174	.742	-.787
80	215	-.265	.169	.320	-.830
80	216	.444	.153	.892	.009
80	217	.411	.162	.974	-.059
80	218	.390	.172	1.049	-.123
80	219	.051	.213	.714	-.828
80	220	.118	.181	.797	-.393
80	221	.452	.148	.928	-.004
80	222	.353	.150	.928	-.203
80	223	.029	.168	.615	-.672
80	224	.389	.169	.941	-.046
80	225	.439	.142	.999	-.125
80	226	.434	.152	1.023	-.200
80	227	.449	.155	.980	-.085
80	228	.401	.148	.932	-.134
80	229	.353	.123	.811	.005
80	230	.228	.164	.737	-.238
80	231	.108	.116	.495	-.252
80	232	-.030	.106	.288	-.346
80	233	.314	.146	.943	-.155
80	234	.369	.153	1.014	-.091
80	235	.368	.151	.980	-.096
80	236	.381	.152	.989	-.101
80	237	.357	.120	.841	.020

WD	TAP	CPMEAN	CPRMS	CPMAX	CPMIN
80	238	.300	.124	.747	-.080
80	239	.257	.105	.653	-.109
80	240	.086	.107	.416	-.281
80	241	.010	.108	.448	-.352
80	242	.181	.160	.724	-.246
80	243	.069	.119	.522	-.303
80	244	-.080	.117	.373	-.471
80	245	.042	.118	.420	-.338
80	247	.165	.124	.719	-.215
80	248	.218	.130	.841	-.191
80	249	.322	.122	.766	-.087
80	250	.322	.129	.798	-.106
80	251	.354	.139	.932	-.066
80	252	.283	.127	.767	-.105
80	253	.266	.123	.690	-.136
80	254	.131	.132	.619	-.337
80	255	.051	.117	.463	-.329
80	256	-.007	.115	.408	-.359
80	257	-.104	.095	.241	-.448
80	258	.238	.138	.742	-.216
80	259	.301	.110	.731	-.009
80	260	.298	.131	.809	-.076
80	261	.327	.133	.840	-.056
80	262	.297	.132	.816	-.097
80	263	.274	.102	.625	-.055
80	264	.101	.111	.498	-.266
80	265	-.032	.109	.351	-.376
80	266	.149	.152	.703	-.438
80	267	.241	.104	.641	-.136
80	268	.341	.134	.829	-.094
80	269	.276	.129	.743	-.124
80	270	-.076	.104	.272	-.507
80	271	.181	.105	.524	-.307
80	272	-.018	.134	.495	-.621
80	273	.141	.126	.618	-.421
80	274	.198	.134	.675	-.442
80	275	.164	.109	.537	-.323
80	276	.060	.130	.563	-.656
80	277	-.094	.148	.534	-.789
80	278	.125	.146	.589	-.552
80	279	.240	.109	.658	-.053
80	280	.252	.136	.758	-.098
80	281	.129	.121	.596	-.222
80	301	-.242	.123	.126	-.838
80	302	-.638	.181	-.016	-1.354
80	303	-.258	.110	.100	-.745
80	304	-.223	.099	.109	-.599
80	305	-.155	.119	.270	-.574
80	306	-.066	.123	.358	-.791
80	307	-.031	.181	.608	-.725

WD	TAP	CPMEAN	CPRMS	CPMAX	CPMIN
80	308	.125	.248	.826	-.730
80	309	.049	.221	.706	-1.379
80	310	-.258	.131	.166	-.770
80	311	.025	.115	.491	-.477
80	312	.065	.148	.662	-.560
80	313	.146	.168	.612	-.644
80	314	.080	.154	.486	-.551
80	315	-.003	.116	.300	-.565
80	316	-.212	.141	.283	-.931
80	317	.061	.133	.535	-.522
80	318	.209	.155	.750	-.571
80	319	.263	.137	.728	-.250
80	320	.194	.146	.690	-.428
80	321	.102	.189	.571	-.762
80	322	-.011	.210	.732	-.747
80	323	-.027	.184	.661	-.658
80	324	-.172	.117	.227	-.651
80	325	.086	.120	.510	-.391
80	326	.172	.137	.644	-.422
80	327	.205	.145	.670	-.455
80	328	.196	.129	.584	-.304
80	329	.145	.168	.705	-.585
80	330	.014	.212	.657	-.911
80	331	-.005	.187	.605	-.743
80	332	-.239	.121	.189	-.693
80	333	.068	.106	.479	-.340
80	334	.143	.120	.662	-.375
80	335	.200	.127	.715	-.321
80	336	.130	.123	.501	-.407
80	337	.061	.140	.519	-.613
80	338	.037	.179	.515	-.624
80	339	-.044	.180	.469	-.958
80	340	-.245	.103	.115	-.604
80	341	-.305	.128	.078	-.752
80	342	.010	.096	.411	-.298
80	343	.097	.119	.537	-.319
80	344	.135	.139	.559	-.326
80	345	.085	.133	.485	-.384
80	346	.090	.124	.497	-.463
80	347	.022	.162	.552	-.803
80	348	-.026	.163	.557	-.875
80	349	-.249	.104	.086	-.643
80	350	-.181	.102	.227	-.559
80	351	.126	.116	.534	-.280
80	352	-.043	.105	.352	-.430
80	353	-.075	.110	.278	-.503
80	354	.010	.125	.504	-.483
80	355	-.111	.088	.211	-.415
80	356	-.060	.095	.298	-.376
80	357	-.035	.100	.297	-.412

APPENDIX A -- PRESSURE DATA: BASS BROTHERS BUILDING - PHASE II, DALLAS

WD	TAP	CPMEAN	CPRMS	CPMAX	CPMIN
80	358	-.050	.106	.315	-.490
80	359	.071	.101	.448	-.230
80	360	.061	.139	.586	-.612
80	361	.011	.149	.503	-.625
80	362	-.118	.083	.137	-.398
80	363	-.168	.094	.112	-.531
80	364	-.056	.101	.272	-.422
80	365	-.096	.126	.254	-.538
80	366	.128	.098	.504	-.262
80	401	-.409	.118	-.007	-.823
80	402	-.381	.131	.030	-.851
80	403	-.356	.118	.024	-.852
80	404	-.292	.104	.041	-.735
80	405	-.301	.108	.051	-.675
80	406	-.184	.102	.146	-.547
80	407	-.209	.107	.152	-.608
80	408	-.336	.124	.044	-.790
80	409	-.279	.101	.059	-.879
80	410	-.252	.110	.114	-.759
80	411	-.266	.109	.096	-.630
80	412	-.246	.104	.087	-.572
80	413	-.245	.106	.094	-.672
80	414	-.266	.112	.134	-.696
80	415	-.248	.117	.170	-.650
80	416	-.272	.120	.145	-.722
80	417	-.244	.114	.150	-.700
80	418	-.184	.088	.089	-.487
80	419	-.162	.098	.173	-.510
80	420	-.178	.112	.175	-.723
80	421	-.168	.112	.196	-.658
80	422	-.222	.110	.161	-1.034
80	423	-.272	.118	.144	-.866
80	424	-.214	.105	.194	-.675
80	425	-.173	.095	.224	-.465
80	426	-.188	.096	.205	-.520
80	427	-.170	.096	.188	-.508
80	428	-.128	.099	.298	-.439
80	429	-.118	.115	.435	-.508
80	430	-.272	.123	.346	-.793
80	431	-.255	.111	.134	-.690
80	432	-.218	.093	.103	-.519
80	433	-.209	.105	.163	-.557
80	434	-.224	.104	.174	-.561
80	435	-.192	.102	.229	-.570
80	436	-.152	.090	.115	-.488
80	437	-.148	.107	.173	-.565
80	438	-.268	.123	.179	-.843
80	439	-.295	.132	.138	-.869
80	440	-.283	.128	.134	-.818
80	441	-.221	.105	.098	-.605
80	442	-.225	.113	.095	-.607
80	443	-.237	.116	.134	-.604
80	444	-.252	.110	.132	-.598
80	445	-.230	.098	.154	-.617
80	446	-.246	.108	.186	-.710
80	447	-.266	.112	.171	-.741
80	448	-.260	.112	.178	-.712
80	449	-.222	.104	.173	-.548
80	450	-.206	.116	.247	-.604
80	451	-.223	.112	.231	-.613
80	452	-.218	.099	.111	-.532
80	453	-.232	.099	.119	-.567
80	454	-.212	.101	.105	-.603
80	455	-.244	.103	.064	-.618
80	456	-.238	.109	.184	-.622
80	457	-.263	.109	.062	-.723
80	458	-.257	.120	.112	-.677
80	459	-.269	.115	.098	-.972
80	460	-.276	.113	.117	-.723
80	461	-.274	.119	.087	-.659
80	801	-.292	.118	.109	-.667
80	802	-.292	.127	.243	-.747
80	803	-.344	.114	-.026	-.829
80	804	-.165	.090	.177	-.468
80	805	-.090	.095	.298	-.378
80	806	.017	.107	.360	-.312
80	807	-.295	.123	.117	-.976
80	808	-.257	.102	.106	-.630
80	809	-.058	.133	.501	-.605
80	810	.096	.122	.526	-.359
80	901	.107	.140	.877	-.431
80	902	.099	.107	.494	-.389
80	903	-.617	.213	.015	-1.470
80	904	-.355	.140	.154	-.856
80	905	-.283	.131	.086	-.991
80	906	-.350	.153	.088	-.976
80	907	-.349	.139	.145	-.929
80	908	-.380	.127	.037	-.813
80	909	-.276	.099	.077	-.645
80	910	-.374	.140	.162	-1.224
80	911	-.318	.119	.059	-.810
80	912	-.350	.132	.107	-.818
80	913	-.336	.109	-.007	-.921
90	101	-.219	.109	.135	-.635
90	102	-.287	.131	.147	-.763
90	103	-.295	.125	.115	-.718
90	104	-.284	.115	.085	-.665
90	105	-.215	.099	.123	-.638
90	106	-.284	.107	.044	-.691
90	107	-.286	.103	.037	-.655
90	108	-.338	.113	-.015	-.974
90	109	-.242	.096	.150	-.568
90	110	-.324	.106	.093	-.771
90	111	-.316	.104	.093	-.669
90	112	-.344	.109	.003	-.739
90	113	-.328	.144	.092	-.885
90	114	-.396	.156	.067	-.914
90	115	-.339	.140	.106	-.988
90	116	-.250	.090	.049	-.535
90	117	-.212	.109	.132	-.618
90	118	-.207	.104	.162	-.580
90	119	-.252	.116	.089	-.630
90	120	-.284	.112	.046	-.658
90	121	-.298	.112	.047	-.710
90	122	-.218	.098	.151	-.597
90	123	-.274	.097	.051	-.662
90	124	-.232	.109	.115	-.595
90	125	-.239	.106	.089	-.597
90	126	-.163	.079	.097	-.422
90	127	-.237	.106	.110	-.650
90	128	-.317	.115	.069	-.782
90	129	-.318	.111	.055	-.723
90	130	-.227	.104	.198	-.629
90	131	-.188	.115	.379	-.594
90	132	-.208	.111	.339	-.605
90	133	-.183	.100	.160	-.485
90	134	-.217	.112	.341	-.641
90	135	-.168	.120	.186	-.646
90	136	-.248	.131	.134	-.777
90	137	-.270	.137	.276	-.843
90	138	-.265	.132	.181	-.757
90	139	-.223	.104	.311	-.592
90	140	-.235	.115	.161	-.641
90	141	-.256	.113	.141	-.646
90	142	-.261	.118	.205	-.668
90	143	-.231	.101	.115	-.533
90	144	-.211	.104	.139	-.549
90	145	-.290	.118	.163	-.665
90	146	-.308	.130	.275	-.740
90	147	-.279	.130	.295	-.734
90	148	-.203	.130	.368	-.848
90	149	-.291	.118	.102	-.754
90	150	-.315	.114	.040	-.740
90	151	-.235	.087	.082	-.527
90	152	-.305	.107	.101	-.759
90	153	-.354	.112	.058	-.712
90	154	-.369	.111	.089	-.756
90	155	-.365	.113	.125	-.736
90	156	-.266	.096	.066	-.606
90	157	-.337	.109	.028	-.708

APPENDIX A -- PRESSURE DATA: BASS BROTHERS BUILDING - PHASE II, DALLAS

WD	TAP	CPMEAN	CPRMS	CPMAX	CPMIN
90	158	-.329	.099	.145	-.633
90	159	-.316	.096	.150	-.623
90	160	-.301	.106	.086	-.827
90	161	-.389	.120	.071	-.846
90	162	-.408	.123	.061	-.821
90	163	-.412	.120	.068	-.818
90	164	-.321	.120	.215	-.921
90	165	-.290	.098	.047	-.630
90	166	-.289	.098	.054	-.640
90	167	-.311	.099	.020	-.686
90	168	-.274	.084	-.016	-.556
90	169	-.327	.105	.006	-.706
90	170	-.364	.117	.003	-.915
90	171	-.394	.120	.032	-.906
90	172	-.359	.099	-.039	-.829
90	173	-.407	.129	-.044	-1.177
90	174	-.317	.095	-.035	-.716
90	176	-.241	.080	.016	-.553
90	177	-.306	.103	.030	-.801
90	178	-.283	.103	.052	-.696
90	179	-.308	.102	.017	-.665
90	180	-.265	.096	.084	-.638
90	181	-.316	.093	-.036	-.671
90	182	-.329	.098	-.027	-.744
90	183	-.359	.099	-.056	-.728
90	184	-.290	.085	.033	-.650
90	185	-.315	.104	.072	-.751
90	186	-.346	.131	.075	-1.273
90	187	-.362	.135	.079	-1.002
90	188	-.285	.095	-.002	-.732
90	189	-.315	.108	.033	-.672
90	190	-.312	.107	.016	-.700
90	191	-.265	.140	.185	-.909
90	192	-.187	.085	.154	-.515
90	193	-.358	.117	-.005	-.912
90	194	-.338	.112	.033	-.772
90	195	-.337	.108	.017	-.723
90	196	-.278	.082	-.009	-.541
90	197	-.315	.100	.006	-.647
90	198	-.325	.100	-.041	-.770
90	201	.353	.171	.938	-.212
90	202	.273	.174	.873	-.310
90	203	.238	.183	.918	-.419
90	204	.192	.117	.642	-.188
90	205	.027	.132	.542	-.454
90	206	.036	.124	.431	-.403
90	207	-.040	.117	.328	-.455
90	208	.410	.146	1.058	-.069
90	209	.206	.132	.758	-.275
90	210	.217	.140	.789	-.262

WD	TAP	CPMEAN	CPRMS	CPMAX	CPMIN
90	211	-.185	.132	.482	-.633
90	212	.336	.149	.834	-.065
90	213	.266	.156	.794	-.185
90	214	-.076	.165	.482	-.789
90	215	-.244	.123	.257	-.675
90	216	.427	.153	1.006	-.110
90	217	.401	.149	.906	-.116
90	218	.366	.171	.978	-.175
90	219	-.054	.189	.540	-.601
90	220	.018	.196	.810	-.521
90	221	.431	.142	.967	-.039
90	222	.298	.138	.798	-.200
90	223	-.157	.155	.421	-.768
90	224	.440	.164	1.038	-.124
90	225	.368	.140	.866	-.039
90	226	.363	.153	.914	-.080
90	227	.396	.161	.954	-.057
90	228	.354	.145	.839	-.105
90	229	.299	.117	.715	-.127
90	230	.170	.155	.716	-.377
90	231	.076	.108	.556	-.303
90	232	-.021	.096	.395	-.363
90	233	.367	.123	.814	-.062
90	234	.307	.132	.726	-.105
90	235	.303	.134	.738	-.120
90	236	.335	.136	.769	-.127
90	237	.332	.122	.722	-.022
90	238	.259	.123	.716	-.118
90	239	.204	.099	.633	-.163
90	240	.030	.104	.439	-.350
90	241	-.020	.096	.305	-.350
90	242	.121	.147	.578	-.393
90	243	.007	.106	.397	-.362
90	244	-.122	.104	.241	-.488
90	245	-.017	.107	.359	-.349
90	247	.101	.120	.616	-.300
90	248	.312	.147	.899	-.115
90	249	.304	.133	.727	-.073
90	250	.306	.145	.754	-.118
90	251	.322	.139	.835	-.158
90	252	.272	.133	.690	-.121
90	253	.215	.110	.682	-.154
90	254	.047	.118	.434	-.381
90	255	-.019	.102	.365	-.360
90	256	-.077	.100	.315	-.424
90	257	-.139	.089	.181	-.481
90	258	.263	.143	.860	-.243
90	259	.266	.104	.749	-.142
90	260	.251	.125	.825	-.119
90	261	.285	.128	.907	-.124

WD	TAP	CPMEAN	CPRMS	CPMAX	CPMIN
90	262	.237	.119	.769	-.102
90	263	.203	.089	.590	-.065
90	264	.023	.098	.441	-.286
90	265	-.095	.096	.292	-.401
90	266	.214	.125	.662	-.156
90	267	.249	.103	.635	-.155
90	268	.289	.125	.753	-.171
90	269	.203	.110	.590	-.220
90	270	-.111	.097	.266	-.441
90	271	.207	.111	.550	-.238
90	272	-.051	.135	.459	-.586
90	273	.191	.114	.605	-.278
90	274	.221	.123	.626	-.230
90	275	.142	.094	.508	-.231
90	276	.028	.112	.488	-.563
90	277	-.155	.134	.269	-.784
90	278	.174	.129	.684	-.368
90	279	.270	.100	.652	-.036
90	280	.218	.116	.610	-.145
90	281	.040	.108	.499	-.347
90	301	-.229	.110	.138	-.618
90	302	-.382	.214	.411	-1.074
90	303	-.264	.099	.070	-.597
90	304	-.234	.089	.059	-.595
90	305	-.143	.099	.266	-.556
90	306	-.020	.111	.394	-.412
90	307	.164	.138	.639	-.245
90	308	.386	.167	.888	-.509
90	309	.310	.177	.865	-.428
90	310	-.304	.125	.094	-.827
90	311	.032	.094	.368	-.305
90	312	.087	.114	.557	-.343
90	313	.284	.133	.734	-.100
90	314	.231	.119	.604	-.127
90	315	.153	.117	.533	-.330
90	316	-.259	.122	.089	-.789
90	317	.104	.123	.554	-.255
90	318	.303	.149	.806	-.116
90	319	.357	.134	.848	-.019
90	320	.303	.133	.797	-.066
90	321	.307	.121	.801	-.122
90	322	.277	.201	.830	-.483
90	323	.257	.218	.893	-.616
90	324	-.267	.104	.080	-.654
90	325	.093	.108	.493	-.304
90	326	.223	.131	.659	-.202
90	327	.311	.141	.741	-.141
90	328	.256	.106	.615	-.044
90	329	.248	.118	.655	-.236
90	330	.209	.171	.686	-.452

APPENDIX A -- PRESSURE DATA:

BASS BROTHERS BUILDING - PHASE II, DALLAS

WD	TAP	CPMEAN	CPRMS	CPMAX	CPMIN
90	331	.187	.179	.741	-.445
90	332	-.333	.117	.092	-.785
90	333	.066	.095	.484	-.305
90	334	.172	.107	.709	-.193
90	335	.273	.113	.873	-.117
90	336	.244	.100	.623	-.154
90	337	.170	.123	.601	-.222
90	338	.238	.141	.691	-.328
90	339	.225	.182	.755	-.489
90	340	-.350	.101	.023	-.689
90	341	-.442	.134	.149	-.948
90	342	-.040	.086	.219	-.398
90	343	.116	.099	.430	-.246
90	344	.195	.108	.529	-.151
90	345	.158	.100	.515	-.189
90	346	.164	.100	.505	-.170
90	347	.166	.133	.608	-.350
90	348	.119	.153	.651	-.446
90	349	-.323	.117	.087	-.812
90	350	-.237	.111	.238	-.648
90	351	.190	.113	.638	-.152
90	352	-.062	.128	.361	-.763
90	353	-.049	.126	.358	-.591
90	354	.095	.125	.502	-.306
90	355	-.128	.102	.304	-.479
90	356	-.044	.099	.286	-.372
90	357	.010	.102	.367	-.320
90	358	-.024	.113	.350	-.441
90	359	.125	.101	.456	-.240
90	360	.175	.117	.595	-.268
90	361	.140	.119	.511	-.301
90	362	-.149	.080	.116	-.432
90	363	-.245	.104	.082	-.686
90	364	-.042	.100	.322	-.401
90	365	-.032	.123	.423	-.429
90	366	.150	.108	.687	-.245
90	401	-.307	.100	.069	-.652
90	402	-.313	.113	.086	-.750
90	403	-.281	.105	.065	-.707
90	404	-.253	.097	.050	-.637
90	405	-.285	.100	.086	-.597
90	406	-.212	.099	.113	-.578
90	407	-.254	.106	.081	-.611
90	408	-.243	.102	.090	-.623
90	409	-.214	.095	.090	-.577
90	410	-.206	.105	.148	-.581
90	411	-.242	.106	.113	-.590
90	412	-.235	.102	.116	-.602
90	413	-.259	.095	.047	-.615
90	414	-.226	.090	.132	-.551
90	415	-.225	.096	.092	-.543
90	416	-.265	.099	.081	-.579
90	417	-.241	.097	.087	-.553
90	418	-.203	.083	.076	-.532
90	419	-.195	.094	.118	-.602
90	420	-.235	.100	.095	-.636
90	421	-.224	.100	.119	-.607
90	422	-.225	.098	.117	-.671
90	423	-.309	.097	.012	-.700
90	424	-.296	.093	.004	-.621
90	425	-.211	.098	.101	-.533
90	426	-.252	.099	.029	-.579
90	427	-.238	.098	.059	-.573
90	428	-.221	.085	.058	-.495
90	429	-.214	.098	.103	-.530
90	430	-.349	.110	.016	-.836
90	431	-.330	.105	.032	-.799
90	432	-.278	.093	.008	-.563
90	433	-.271	.106	.063	-.613
90	434	-.312	.107	.028	-.633
90	435	-.281	.105	.031	-.603
90	436	-.237	.081	.033	-.525
90	437	-.237	.097	.099	-.587
90	438	-.334	.120	.105	-.792
90	439	-.377	.124	.060	-.976
90	440	-.371	.117	-.016	-.888
90	441	-.341	.103	-.051	-.720
90	442	-.307	.105	-.016	-.696
90	443	-.320	.106	-.031	-.698
90	444	-.321	.106	-.029	-.706
90	445	-.337	.092	-.059	-.677
90	446	-.319	.099	-.015	-.681
90	447	-.349	.103	-.027	-.730
90	448	-.339	.103	-.019	-.713
90	449	-.339	.093	-.035	-.662
90	450	-.306	.098	.027	-.663
90	451	-.337	.099	-.008	-.702
90	452	-.292	.098	-.002	-.625
90	453	-.312	.101	.014	-.728
90	454	-.292	.106	.045	-.690
90	455	-.336	.111	.030	-.790
90	456	-.338	.116	.012	-.761
90	457	-.399	.129	-.001	-.935
90	458	-.352	.133	.063	-.929
90	459	-.343	.116	-.011	-.829
90	460	-.313	.108	.047	-.674
90	461	-.488	.121	-.158	-.922
90	801	-.288	.100	.069	-.656
90	802	-.306	.107	.045	-.727
90	803	-.314	.101	.005	-.693
90	804	-.263	.088	.041	-.537
90	805	-.102	.091	.219	-.406
90	806	.055	.112	.464	-.252
90	807	-.314	.096	-.023	-.635
90	808	-.298	.087	-.012	-.576
90	809	-.147	.115	.276	-.531
90	810	.143	.110	.539	-.226
90	901	.166	.115	.645	-.238
90	902	.199	.097	.618	-.120
90	903	-.551	.160	-.040	-1.220
90	904	-.370	.152	.090	-.921
90	905	-.210	.097	.143	-.551
90	906	-.240	.137	.194	-.934
90	907	-.268	.121	.131	-.785
90	908	-.273	.115	.069	-.695
90	909	-.261	.091	.012	-.583
90	910	-.281	.120	.125	-.834
90	911	-.298	.106	.091	-.707
90	912	-.264	.115	.194	-.692
90	913	-.245	.091	.029	-.715
100	101	-.207	.103	.197	-.596
100	102	-.232	.107	.199	-.587
100	103	-.251	.106	.178	-.592
100	104	-.252	.104	.185	-.594
100	105	-.181	.097	.148	-.590
100	106	-.293	.104	.037	-.726
100	107	-.306	.103	-.006	-.760
100	108	-.294	.109	.078	-.697
100	109	-.203	.090	.113	-.502
100	110	-.274	.099	.079	-.609
100	111	-.290	.102	.057	-.670
100	112	-.306	.105	.046	-.701
100	113	-.210	.103	.094	-.564
100	114	-.248	.105	.103	-.637
100	115	-.254	.099	.062	-.616
100	116	-.209	.079	.034	-.496
100	117	-.247	.095	.039	-.589
100	118	-.237	.094	.056	-.574
100	119	-.224	.097	.103	-.629
100	120	-.255	.096	.040	-.660
100	121	-.259	.097	.047	-.650
100	122	-.206	.098	.162	-.559
100	123	-.273	.099	.026	-.593
100	124	-.243	.104	.091	-.754
100	125	-.239	.100	.081	-.610
100	126	-.193	.070	.034	-.508
100	127	-.240	.099	.074	-.594
100	128	-.296	.101	.014	-.677
100	129	-.291	.100	.070	-.641
100	130	-.225	.093	.087	-.573

APPENDIX A -- PRESSURE DATA: BASS BROTHERS BUILDING - PHASE II, DALLAS

WD	TAP	CPMEAN	CPRMS	CPMAX	CPMIN
100	131	-.236	.099	.118	-.597
100	132	-.265	.097	.089	-.617
100	133	-.233	.087	.064	-.644
100	134	-.266	.098	.080	-.596
100	135	-.194	.088	.126	-.499
100	136	-.249	.097	.106	-.563
100	137	-.283	.103	.085	-.640
100	138	-.279	.099	.078	-.642
100	139	-.255	.091	.086	-.644
100	140	-.266	.104	.076	-.626
100	141	-.296	.104	.052	-.657
100	142	-.293	.104	.069	-.673
100	143	-.282	.091	.012	-.638
100	144	-.239	.092	.052	-.528
100	145	-.296	.102	.023	-.641
100	146	-.327	.106	.027	-.711
100	147	-.312	.105	.069	-.718
100	148	-.249	.097	.058	-.576
100	149	-.319	.101	.066	-.685
100	150	-.352	.098	-.035	-.707
100	151	-.275	.081	-.019	-.528
100	152	-.349	.103	-.033	-.838
100	153	-.358	.116	.104	-.789
100	154	-.381	.117	.097	-.792
100	155	-.369	.115	.089	-.780
100	156	-.296	.098	.030	-.651
100	157	-.353	.110	.012	-.749
100	158	-.335	.103	.000	-.716
100	159	-.320	.100	-.026	-.693
100	160	-.330	.102	-.043	-.749
100	161	-.391	.113	-.063	-.833
100	162	-.407	.115	-.022	-.832
100	163	-.389	.113	.010	-.817
100	164	-.314	.105	.044	-.729
100	165	-.343	.101	-.054	-.701
100	166	-.341	.101	-.053	-.688
100	167	-.364	.103	-.062	-.723
100	168	-.306	.086	-.015	-.619
100	169	-.364	.108	.002	-.762
100	170	-.395	.116	.004	-.838
100	171	-.414	.124	-.023	-1.041
100	172	-.353	.098	-.041	-.777
100	173	-.386	.122	.013	-.974
100	174	-.354	.096	-.020	-.791
100	176	-.273	.085	.100	-.566
100	177	-.331	.108	.017	-.714
100	178	-.311	.108	.055	-.667
100	179	-.332	.110	-.003	-.738
100	180	-.291	.089	-.027	-.673
100	181	-.354	.103	-.034	-.783
100	182	-.354	.102	-.053	-.778
100	183	-.393	.106	-.069	-.855
100	184	-.313	.088	-.059	-.678
100	185	-.341	.104	-.052	-.729
100	186	-.370	.125	-.023	-1.061
100	187	-.380	.130	-.011	-.961
100	188	-.315	.097	-.019	-.839
100	189	-.346	.107	.030	-.762
100	190	-.339	.104	-.007	-.752
100	191	-.333	.132	.086	-.836
100	192	-.217	.079	.038	-.521
100	193	-.373	.112	-.015	-.872
100	194	-.351	.106	.016	-.806
100	195	-.352	.103	-.005	-.730
100	196	-.295	.081	-.037	-.580
100	197	-.332	.099	.023	-.693
100	198	-.345	.100	-.018	-.749
100	201	.302	.150	.831	-.264
100	202	.168	.141	.672	-.285
100	203	.067	.159	.737	-.455
100	204	.182	.114	.565	-.178
100	205	-.034	.112	.440	-.423
100	206	-.054	.108	.412	-.450
100	207	-.097	.098	.292	-.441
100	208	.279	.169	.919	-.463
100	209	.122	.127	.578	-.347
100	210	.109	.132	.608	-.396
100	211	-.186	.099	.166	-.541
100	212	.272	.148	.866	-.218
100	213	.198	.140	.745	-.274
100	214	-.228	.149	.289	-.848
100	215	-.252	.095	.080	-.594
100	216	.222	.161	.837	-.215
100	217	.359	.152	.818	-.118
100	218	.314	.182	.881	-.225
100	219	-.265	.115	.222	-.626
100	220	-.195	.119	.479	-.636
100	221	.377	.137	.830	-.066
100	222	.227	.130	.711	-.219
100	223	-.234	.152	.261	-.890
100	224	.270	.221	.926	-.629
100	225	.242	.145	.742	-.354
100	226	.229	.157	.786	-.442
100	227	.239	.173	.843	-.301
100	228	.313	.152	.868	-.176
100	229	.243	.107	.556	-.088
100	230	.117	.135	.525	-.352
100	231	-.012	.097	.356	-.304
100	232	-.102	.087	.204	-.343
100	233	.266	.186	.850	-.573
100	234	.199	.137	.702	-.406
100	235	.186	.138	.718	-.358
100	236	.198	.148	.757	-.328
100	237	.278	.121	.679	-.187
100	238	.198	.111	.582	-.143
100	239	.125	.083	.405	-.201
100	240	-.046	.091	.327	-.343
100	241	-.095	.083	.178	-.372
100	242	.061	.125	.445	-.423
100	243	-.080	.094	.227	-.400
100	244	-.199	.094	.135	-.505
100	245	-.123	.100	.281	-.463
100	247	.028	.104	.434	-.352
100	248	.152	.183	.830	-.582
100	249	.179	.127	.694	-.173
100	250	.175	.138	.720	-.244
100	251	.207	.144	.759	-.464
100	252	.189	.130	.655	-.160
100	253	.161	.098	.480	-.200
100	254	-.022	.108	.322	-.557
100	255	-.090	.096	.229	-.404
100	256	-.146	.096	.193	-.445
100	257	-.217	.090	.143	-.525
100	258	.155	.171	.698	-.445
100	259	.175	.099	.494	-.182
100	260	.156	.120	.603	-.275
100	261	.199	.127	.794	-.201
100	262	.188	.118	.614	-.214
100	263	.142	.088	.507	-.155
100	264	-.040	.092	.323	-.409
100	265	-.157	.091	.157	-.495
100	266	.136	.143	.639	-.445
100	267	.168	.118	.589	-.188
100	268	.193	.137	.705	-.264
100	269	.140	.118	.649	-.231
100	270	-.176	.098	.136	-.523
100	271	.120	.087	.491	-.237
100	272	-.138	.124	.375	-.759
100	273	.106	.118	.497	-.473
100	274	.116	.105	.513	-.278
100	275	.069	.093	.580	-.200
100	276	-.047	.107	.445	-.440
100	277	-.251	.130	.163	-.785
100	278	.162	.123	.695	-.220
100	279	.179	.110	.546	-.323
100	280	.145	.107	.516	-.220
100	281	-.030	.092	.291	-.364
100	301	-.285	.116	.177	-.681
100	302	-.101	.224	.498	-.941
100	303	-.303	.108	.064	-.669

APPENDIX A -- PRESSURE DATA:

BASS BROTHERS BUILDING - PHASE II, DALLAS

WD	TAP	CPMEAN	CPRMS	CPMAX	CPMIN
100	304	-.275	.094	.009	-.641
100	305	-.164	.104	.184	-.521
100	306	-.018	.106	.312	-.361
100	307	.196	.132	.705	-.203
100	308	.422	.149	.999	-.057
100	309	.412	.161	1.027	-.077
100	310	-.317	.146	.165	-.844
100	311	.035	.101	.385	-.337
100	312	.079	.118	.523	-.331
100	313	.296	.136	.831	-.163
100	314	.270	.127	.753	-.136
100	315	.260	.117	.650	-.109
100	316	-.321	.140	.122	-.880
100	317	.093	.116	.504	-.306
100	318	.299	.139	.753	-.089
100	319	.386	.122	.886	-.017
100	320	.356	.127	.767	-.044
100	321	.368	.138	.850	-.003
100	322	.417	.153	.908	-.068
100	323	.437	.161	.963	-.251
100	324	-.372	.122	-.006	-.876
100	325	.098	.107	.542	-.263
100	326	.249	.129	.787	-.118
100	327	.349	.136	.910	-.009
100	328	.325	.111	.681	-.053
100	329	.348	.125	.744	-.086
100	330	.378	.148	.859	-.135
100	331	.387	.161	.909	-.187
100	332	-.396	.130	.024	-.897
100	333	.067	.097	.400	-.262
100	334	.175	.110	.563	-.198
100	335	.284	.118	.754	-.092
100	336	.280	.110	.711	-.017
100	337	.235	.125	.648	-.250
100	338	.310	.128	.772	-.107
100	339	.324	.128	.773	-.265
100	340	-.403	.110	-.053	-.909
100	341	-.521	.168	-.003	-1.067
100	342	-.062	.105	.313	-.410
100	343	.124	.111	.488	-.219
100	344	.209	.118	.661	-.113
100	345	.197	.115	.636	-.154
100	346	.209	.106	.611	-.121
100	347	.241	.122	.662	-.247
100	348	.211	.137	.610	-.305
100	349	-.348	.130	.149	-.908
100	350	-.237	.129	.353	-.689
100	351	.246	.116	.767	-.242
100	352	-.019	.152	.475	-.515
100	353	.082	.143	.539	-.575
100	354	.145	.118	.710	-.206
100	355	-.117	.096	.259	-.412
100	356	-.027	.101	.291	-.344
100	357	.060	.107	.438	-.283
100	358	.092	.142	.508	-.364
100	359	.192	.135	.623	-.168
100	360	.207	.137	.733	-.136
100	361	.171	.128	.721	-.202
100	362	-.174	.085	.100	-.488
100	363	-.243	.118	.145	-.682
100	364	-.012	.110	.385	-.374
100	365	.093	.154	.607	-.415
100	366	.211	.123	.649	-.157
100	401	-.279	.105	.091	-.616
100	402	-.341	.138	.109	-1.274
100	403	-.284	.126	.132	-.867
100	404	-.287	.096	-.006	-.690
100	405	-.307	.100	.057	-.663
100	406	-.237	.092	.089	-.573
100	407	-.285	.099	.079	-.666
100	408	-.287	.114	.067	-.737
100	409	-.287	.099	.003	-.683
100	410	-.271	.106	.026	-.693
100	411	-.305	.107	.025	-.750
100	412	-.285	.096	.050	-.614
100	413	-.304	.100	.017	-.598
100	414	-.277	.094	.001	-.675
100	415	-.272	.096	.034	-.581
100	416	-.314	.099	.010	-.619
100	417	-.284	.097	.038	-.592
100	418	-.245	.082	.132	-.507
100	419	-.233	.093	.177	-.550
100	420	-.278	.100	.162	-.635
100	421	-.264	.099	.169	-.636
100	422	-.304	.098	-.005	-.752
100	423	-.359	.105	-.004	-.862
100	424	-.366	.099	-.083	-.705
100	425	-.277	.099	.045	-.651
100	426	-.323	.101	.012	-.709
100	427	-.308	.101	.031	-.690
100	428	-.266	.086	.006	-.567
100	429	-.255	.098	.052	-.608
100	430	-.370	.111	-.009	-.842
100	431	-.349	.103	-.005	-.764
100	432	-.326	.089	.020	-.639
100	433	-.306	.099	.070	-.637
100	434	-.352	.102	.030	-.733
100	435	-.325	.099	.039	-.686
100	436	-.278	.081	-.041	-.561
100	437	-.273	.097	.011	-.611
100	438	-.390	.111	-.063	-.816
100	439	-.437	.115	-.096	-.852
100	440	-.411	.111	-.059	-.891
100	441	-.416	.101	-.062	-.772
100	442	-.359	.100	-.020	-.754
100	443	-.389	.103	-.031	-.793
100	444	-.374	.102	-.019	-.772
100	445	-.402	.099	-.055	-.740
100	446	-.365	.104	-.004	-.711
100	447	-.414	.109	-.024	-.801
100	448	-.396	.108	-.004	-.801
100	449	-.404	.104	.007	-.754
100	450	-.346	.105	.099	-.721
100	451	-.396	.105	-.018	-.780
100	452	-.345	.106	.041	-.753
100	453	-.362	.108	.020	-.764
100	454	-.347	.105	-.004	-.733
100	455	-.414	.111	-.037	-.802
100	456	-.449	.140	-.005	-.947
100	457	-.448	.136	.045	-.946
100	458	-.404	.132	-.008	-1.020
100	459	-.404	.111	-.028	-.847
100	460	-.358	.103	-.014	-.757
100	461	-.609	.139	-.231	-1.100
100	801	-.321	.102	-.008	-.728
100	802	-.365	.107	-.039	-.804
100	803	-.356	.103	-.050	-.739
100	804	-.252	.103	.059	-.627
100	805	-.066	.101	.292	-.420
100	806	.046	.119	.598	-.367
100	807	-.335	.109	.031	-.699
100	808	-.341	.100	.000	-.683
100	809	-.220	.124	.254	-.742
100	810	.124	.109	.526	-.355
100	901	.196	.120	.956	-.175
100	902	.270	.107	.678	-.078
100	903	-.559	.155	-.112	-1.163
100	904	-.429	.141	.019	-.939
100	905	-.224	.096	.130	-.534
100	906	-.234	.123	.209	-.790
100	907	-.289	.116	.124	-.738
100	908	-.224	.118	.165	-.558
100	909	-.260	.095	.076	-.635
100	910	-.242	.112	.130	-.734
100	911	-.292	.115	.187	-.829
100	912	-.276	.124	.185	-.802
100	913	-.226	.097	.091	-.709
110	101	-.211	.104	.173	-.549
110	102	-.205	.107	.158	-.577
110	103	-.228	.106	.138	-.598

APPENDIX A -- PRESSURE DATA: BASS BROTHERS BUILDING - PHASE II, DALLAS

WD	TAP	CPMEAN	CPRMS	CPMAX	CPMIN
110	104	-.226	.105	.124	-.592
110	105	-.173	.096	.179	-.504
110	106	-.295	.102	.039	-.620
110	107	-.311	.102	.035	-.687
110	108	-.292	.115	.096	-.859
110	109	-.195	.095	.114	-.531
110	110	-.260	.102	.050	-.631
110	111	-.275	.106	.098	-.713
110	112	-.296	.113	.078	-.712
110	113	-.175	.092	.110	-.540
110	114	-.211	.096	.071	-.556
110	115	-.232	.095	.056	-.613
110	116	-.188	.076	.082	-.535
110	117	-.239	.094	.072	-.634
110	118	-.232	.094	.079	-.621
110	119	-.207	.100	.080	-.552
110	120	-.239	.100	.063	-.600
110	121	-.238	.100	.076	-.576
110	122	-.202	.096	.151	-.508
110	123	-.265	.098	.063	-.664
110	124	-.239	.103	.131	-.609
110	125	-.232	.098	.135	-.551
110	126	-.178	.078	.073	-.494
110	127	-.222	.093	.077	-.566
110	128	-.286	.098	.028	-.643
110	129	-.274	.096	.036	-.652
110	130	-.196	.096	.163	-.560
110	131	-.200	.101	.169	-.557
110	132	-.230	.100	.122	-.602
110	133	-.214	.096	.082	-.563
110	134	-.230	.099	.142	-.594
110	135	-.180	.087	.088	-.533
110	136	-.227	.097	.090	-.649
110	137	-.261	.105	.127	-.699
110	138	-.259	.101	.091	-.651
110	139	-.244	.104	.115	-.677
110	140	-.254	.106	.092	-.641
110	141	-.286	.104	.060	-.652
110	142	-.285	.104	.071	-.662
110	143	-.286	.095	.033	-.605
110	144	-.262	.099	.164	-.596
110	145	-.314	.108	.127	-.693
110	146	-.352	.112	.104	-.745
110	147	-.342	.111	.134	-.707
110	148	-.273	.100	.129	-.628
110	149	-.314	.107	.084	-.699
110	150	-.348	.104	.028	-.721
110	151	-.260	.073	-.034	-.532
110	152	-.334	.101	-.012	-.714
110	153	-.338	.108	.059	-.786
110	154	-.368	.107	.024	-.823
110	155	-.355	.106	.041	-.786
110	156	-.309	.095	.009	-.627
110	157	-.357	.106	-.012	-.761
110	158	-.332	.102	-.031	-.782
110	159	-.311	.100	-.013	-.757
110	160	-.316	.094	.004	-.604
110	161	-.368	.105	-.032	-.767
110	162	-.399	.108	-.038	-.794
110	163	-.388	.106	-.056	-.772
110	164	-.335	.103	.026	-.671
110	165	-.302	.088	-.032	-.624
110	166	-.301	.088	-.033	-.641
110	167	-.319	.089	-.042	-.637
110	168	-.280	.081	-.026	-.551
110	169	-.331	.099	-.029	-.675
110	170	-.347	.104	-.012	-.739
110	171	-.368	.111	-.011	-.801
110	172	-.300	.084	.045	-.657
110	173	-.344	.103	-.008	-.850
110	174	-.307	.091	-.018	-.584
110	176	-.299	.077	-.029	-.577
110	177	-.308	.091	-.009	-.634
110	178	-.293	.090	-.012	-.603
110	179	-.301	.090	-.011	-.620
110	180	-.283	.094	.016	-.662
110	181	-.359	.101	-.041	-.708
110	182	-.334	.103	.025	-.792
110	183	-.360	.103	-.028	-.777
110	184	-.274	.083	-.016	-.547
110	185	-.311	.099	-.021	-.667
110	186	-.325	.110	.028	-.795
110	187	-.320	.111	-.006	-.852
110	188	-.257	.075	-.022	-.595
110	189	-.301	.089	-.037	-.620
110	190	-.301	.088	-.030	-.618
110	191	-.363	.111	.018	-.785
110	192	-.231	.079	.062	-.580
110	193	-.355	.105	-.010	-.866
110	194	-.323	.100	.009	-.778
110	195	-.325	.098	.011	-.712
110	196	-.249	.074	-.004	-.479
110	197	-.286	.088	.014	-.594
110	198	-.296	.092	.024	-.567
110	201	.247	.164	.847	-.370
110	202	.075	.143	.597	-.447
110	203	-.065	.168	.563	-.902
110	204	.160	.149	.699	-.456
110	205	-.039	.117	.375	-.533
110	206	-.090	.101	.261	-.421
110	207	-.118	.094	.200	-.425
110	208	.024	.224	.669	-.856
110	209	-.001	.163	.597	-.758
110	210	-.024	.165	.477	-.770
110	211	-.199	.103	.104	-.603
110	212	.272	.174	.904	-.239
110	213	.209	.161	.816	-.348
110	214	-.282	.154	.261	-.966
110	215	-.251	.097	.115	-.546
110	216	.044	.136	.610	-.448
110	217	.290	.213	.935	-.507
110	218	.288	.185	.980	-.296
110	219	-.298	.103	.044	-.641
110	220	-.237	.097	.094	-.633
110	221	.339	.161	.914	-.367
110	222	.202	.146	.759	-.699
110	223	-.268	.141	.259	-.860
110	224	-.024	.233	.719	-.950
110	225	.033	.147	.396	-.615
110	226	.016	.162	.410	-.739
110	227	.002	.161	.525	-.668
110	228	.175	.186	.768	-.546
110	229	.196	.113	.597	-.272
110	230	.076	.126	.504	-.434
110	231	-.052	.096	.339	-.463
110	232	-.121	.088	.204	-.438
110	233	-.013	.192	.571	-.858
110	234	.023	.155	.470	-.876
110	235	.006	.158	.495	-.975
110	236	.011	.153	.551	-.864
110	237	.156	.158	.659	-.615
110	238	.122	.129	.573	-.445
110	239	.069	.082	.337	-.249
110	240	-.083	.101	.292	-.460
110	241	-.108	.080	.196	-.368
110	242	.014	.110	.401	-.448
110	243	-.121	.089	.202	-.479
110	244	-.219	.091	.098	-.563
110	245	-.172	.094	.153	-.600
110	247	-.015	.097	.279	-.405
110	248	-.087	.184	.553	-.981
110	249	.020	.142	.528	-.536
110	250	.008	.156	.598	-.647
110	251	.046	.164	.607	-.757
110	252	.066	.158	.547	-.619
110	253	.098	.108	.516	-.320
110	254	-.081	.113	.290	-.644
110	255	-.125	.091	.208	-.437
110	256	-.170	.090	.153	-.466
110	257	-.229	.089	.097	-.521

APPENDIX A -- PRESSURE DATA: BASS BROTHERS BUILDING - PHASE II, DALLAS

WD	TAP	CPMEAN	CPRMS	CPMAX	CPMIN
110	258	-.010	.185	.551	-.935
110	259	.033	.124	.395	-.485
110	260	.007	.149	.448	-.668
110	261	.035	.151	.566	-.728
110	262	.079	.143	.548	-.485
110	263	.099	.084	.395	-.250
110	264	-.072	.087	.211	-.446
110	265	-.172	.086	.108	-.511
110	266	-.002	.151	.504	-.928
110	267	.002	.124	.380	-.556
110	268	.011	.148	.465	-.548
110	269	.054	.108	.496	-.341
110	270	-.179	.098	.162	-.545
110	271	.090	.093	.438	-.314
110	272	-.138	.115	.221	-.703
110	273	.032	.142	.572	-.718
110	274	.066	.109	.490	-.361
110	275	.013	.076	.295	-.254
110	276	-.101	.089	.230	-.404
110	277	-.299	.113	.088	-.769
110	278	.111	.117	.522	-.301
110	279	.061	.119	.535	-.371
110	280	.069	.108	.534	-.323
110	281	-.087	.093	.204	-.375
110	301	-.239	.133	.230	-.712
110	302	.162	.154	.604	-.350
110	303	-.309	.109	.015	-.798
110	304	-.264	.096	.089	-.621
110	305	-.146	.108	.231	-.621
110	306	.002	.113	.438	-.365
110	307	.184	.118	.707	-.209
110	308	.443	.144	1.052	-.014
110	309	.445	.155	1.122	-.046
110	310	-.211	.165	.212	-.942
110	311	.079	.113	.537	-.278
110	312	.107	.130	.615	-.284
110	313	.347	.157	.852	-.094
110	314	.336	.147	.814	-.080
110	315	.378	.128	.795	.046
110	316	-.365	.179	.240	-1.304
110	317	.128	.122	.613	-.256
110	318	.342	.139	.800	-.059
110	319	.398	.122	.779	-.021
110	320	.386	.131	.781	-.055
110	321	.441	.144	.872	.002
110	322	.431	.150	.978	-.108
110	323	.426	.151	1.010	-.098
110	324	-.364	.155	.095	-.973
110	325	.122	.120	.531	-.270
110	326	.264	.132	.680	-.158

WD	TAP	CPMEAN	CPRMS	CPMAX	CPMIN
110	327	.364	.137	.812	-.071
110	328	.357	.125	.877	-.018
110	329	.393	.140	1.004	-.019
110	330	.407	.163	1.118	-.013
110	331	.400	.164	1.118	-.021
110	332	-.398	.144	.108	-1.004
110	333	.108	.110	.502	-.252
110	334	.209	.120	.662	-.192
110	335	.316	.130	.780	-.073
110	336	.309	.109	.681	-.013
110	337	.296	.135	.856	-.116
110	338	.358	.134	.784	-.062
110	339	.341	.131	.885	-.083
110	340	-.413	.106	-.059	-.772
110	341	-.477	.186	.096	-1.128
110	342	.002	.121	.540	-.390
110	343	.194	.130	.719	-.289
110	344	.277	.148	.898	-.315
110	345	.285	.143	.876	-.284
110	346	.293	.123	.726	-.182
110	347	.318	.135	.794	-.194
110	348	.257	.141	.693	-.249
110	349	-.338	.133	.087	-.796
110	350	-.200	.135	.489	-.645
110	351	.295	.123	.806	-.094
110	352	.070	.157	.582	-.562
110	353	.187	.142	.677	-.789
110	354	.211	.112	.608	-.133
110	355	-.095	.110	.304	-.562
110	356	.010	.101	.347	-.303
110	357	.126	.103	.507	-.168
110	358	.190	.107	.684	-.205
110	359	.264	.113	.774	-.120
110	360	.239	.121	.762	-.159
110	361	.190	.118	.723	-.231
110	362	-.160	.087	.138	-.421
110	363	-.222	.120	.168	-.729
110	364	.017	.108	.435	-.348
110	365	.203	.133	.730	-.185
110	366	.281	.118	.722	-.009
110	401	-.269	.115	.118	-.742
110	402	-.380	.138	-.004	-1.037
110	403	-.295	.117	.056	-.777
110	404	-.276	.087	.038	-.592
110	405	-.306	.093	-.037	-.575
110	406	-.224	.093	.067	-.580
110	407	-.272	.099	.029	-.687
110	408	-.310	.116	.065	-.954
110	409	-.281	.097	.043	-.631
110	410	-.265	.104	.087	-.640

WD	TAP	CPMEAN	CPRMS	CPMAX	CPMIN
110	411	-.302	.105	.071	-.708
110	412	-.271	.100	.109	-.662
110	413	-.331	.101	.010	-.666
110	414	-.300	.104	.016	-.772
110	415	-.278	.103	.065	-.617
110	416	-.327	.107	.015	-.716
110	417	-.291	.102	.012	-.641
110	418	-.255	.084	.001	-.519
110	419	-.242	.094	.045	-.548
110	420	-.285	.101	.045	-.608
110	421	-.268	.101	.084	-.616
110	422	-.318	.099	.008	-.739
110	423	-.393	.112	-.043	-.862
110	424	-.374	.093	-.081	-.749
110	425	-.286	.097	.043	-.587
110	426	-.332	.100	-.005	-.630
110	427	-.313	.098	.040	-.616
110	428	-.293	.089	.066	-.560
110	429	-.282	.102	.117	-.601
110	430	-.391	.108	.017	-.803
110	431	-.368	.104	.055	-.767
110	432	-.320	.095	.018	-.640
110	433	-.302	.105	.074	-.660
110	434	-.356	.108	.025	-.732
110	435	-.328	.106	.056	-.702
110	436	-.287	.082	-.009	-.586
110	437	-.282	.097	.050	-.645
110	438	-.373	.105	-.027	-.749
110	439	-.453	.111	-.097	-.856
110	440	-.410	.106	-.065	-.828
110	441	-.392	.095	-.114	-.720
110	442	-.343	.098	-.045	-.684
110	443	-.409	.103	-.094	-.801
110	444	-.370	.099	-.066	-.741
110	445	-.381	.093	-.083	-.739
110	446	-.354	.099	-.032	-.757
110	447	-.438	.104	-.108	-.891
110	448	-.392	.102	-.073	-.831
110	449	-.430	.112	-.083	-.841
110	450	-.362	.113	-.004	-.853
110	451	-.447	.116	-.070	-.957
110	452	-.332	.110	.033	-.724
110	453	-.355	.112	.030	-.730
110	454	-.332	.114	.061	-.764
110	455	-.428	.122	-.015	-.877
110	456	-.474	.144	-.017	-1.097
110	457	-.453	.140	.014	-1.161
110	458	-.450	.134	-.028	-1.065
110	459	-.434	.106	-.101	-.840
110	460	-.347	.096	-.057	-.713

APPENDIX A -- PRESSURE DATA: BASS BROTHERS BUILDING - PHASE II, DALLAS

WD	TAP	CPMEAN	CPRMS	CPMAX	CPMIN
110	461	-.653	.148	-.232	-1.351
110	801	-.313	.101	.028	-.630
110	802	-.408	.111	-.010	-.760
110	803	-.345	.101	.026	-.652
110	804	-.227	.109	.435	-.692
110	805	-.030	.103	.315	-.347
110	806	.047	.119	.407	-.330
110	807	-.312	.108	.019	-.710
110	808	-.302	.093	.015	-.648
110	809	-.296	.117	.038	-.831
110	810	.054	.120	.502	-.488
110	901	.214	.106	.630	-.135
110	902	.337	.113	.749	.023
110	903	-.563	.165	-.101	-1.192
110	904	-.434	.136	.053	-.941
110	905	-.241	.087	.029	-.660
110	906	-.256	.110	.115	-.662
110	907	-.310	.100	-.019	-.753
110	908	-.125	.126	.446	-.557
110	909	-.274	.097	.186	-.681
110	910	-.205	.116	.217	-.646
110	911	-.291	.124	.201	-.899
110	912	-.271	.128	.262	-.874
110	913	-.203	.100	.088	-.621
120	101	-.217	.103	.212	-.555
120	102	-.167	.111	.216	-.609
120	103	-.192	.110	.191	-.598
120	104	-.186	.107	.178	-.583
120	105	-.136	.101	.304	-.469
120	106	-.280	.107	.132	-.663
120	107	-.307	.109	.091	-.724
120	108	-.287	.115	.264	-.673
120	109	-.199	.098	.141	-.585
120	110	-.264	.103	.212	-.653
120	111	-.268	.108	.102	-.662
120	112	-.301	.113	.148	-.744
120	113	-.146	.107	.212	-.543
120	114	-.177	.110	.186	-.552
120	115	-.202	.109	.204	-.574
120	116	-.143	.086	.155	-.421
120	117	-.168	.103	.166	-.539
120	118	-.165	.103	.181	-.544
120	119	-.177	.100	.165	-.544
120	120	-.222	.099	.123	-.574
120	121	-.223	.100	.094	-.553
120	122	-.211	.110	.235	-.631
120	123	-.256	.109	.130	-.653
120	124	-.207	.117	.226	-.644
120	125	-.193	.109	.225	-.549
120	126	-.121	.077	.128	-.380

WD	TAP	CPMEAN	CPRMS	CPMAX	CPMIN
120	127	-.174	.106	.182	-.573
120	128	-.250	.109	.078	-.784
120	129	-.244	.108	.104	-.786
120	130	-.189	.109	.227	-.573
120	131	-.143	.116	.273	-.594
120	132	-.170	.109	.212	-.572
120	133	-.140	.099	.218	-.472
120	134	-.171	.106	.271	-.558
120	135	-.135	.097	.164	-.458
120	136	-.188	.106	.194	-.530
120	137	-.228	.113	.166	-.614
120	138	-.231	.111	.194	-.607
120	139	-.217	.107	.194	-.609
120	140	-.216	.116	.221	-.702
120	141	-.246	.113	.206	-.626
120	142	-.250	.109	.148	-.613
120	143	-.201	.105	.163	-.545
120	144	-.192	.096	.140	-.547
120	145	-.244	.107	.157	-.649
120	146	-.287	.113	.137	-.716
120	147	-.277	.111	.172	-.660
120	148	-.238	.112	.215	-.633
120	149	-.268	.121	.171	-.918
120	150	-.297	.113	.111	-.670
120	151	-.191	.088	.098	-.493
120	152	-.276	.104	.063	-.641
120	153	-.306	.118	.055	-.759
120	154	-.338	.118	.042	-.773
120	155	-.327	.117	.098	-.734
120	156	-.258	.106	.077	-.916
120	157	-.294	.111	.068	-.728
120	158	-.260	.108	.073	-.606
120	159	-.236	.105	.080	-.567
120	160	-.264	.100	.031	-.630
120	161	-.312	.112	.028	-.691
120	162	-.350	.115	.074	-.730
120	163	-.343	.113	.053	-.743
120	164	-.293	.103	.095	-.649
120	165	-.235	.104	.112	-.611
120	166	-.237	.103	.116	-.614
120	167	-.256	.104	.083	-.631
120	168	-.207	.083	.090	-.479
120	169	-.259	.102	.105	-.589
120	170	-.273	.108	.097	-.992
120	171	-.294	.111	.101	-.749
120	172	-.244	.094	.106	-.705
120	173	-.306	.115	.068	-.793
120	174	-.248	.100	.071	-.621
120	175	-.253	.094	.049	-.739
120	177	-.225	.100	.082	-.655

WD	TAP	CPMEAN	CPRMS	CPMAX	CPMIN
120	178	-.216	.100	.093	-.647
120	179	-.227	.102	.088	-.629
120	180	-.221	.094	.091	-.513
120	181	-.289	.106	.091	-.784
120	182	-.253	.102	.102	-.632
120	183	-.273	.103	.089	-.637
120	184	-.213	.080	.060	-.591
120	185	-.257	.096	.071	-.602
120	186	-.255	.106	.070	-.663
120	187	-.251	.105	.083	-.674
120	188	-.182	.077	.057	-.523
120	189	-.232	.095	.040	-.664
120	190	-.239	.094	.038	-.695
120	191	-.320	.114	.017	-.843
120	192	-.177	.081	.140	-.431
120	193	-.257	.110	.102	-.624
120	194	-.239	.103	.133	-.584
120	195	-.248	.101	.132	-.598
120	196	-.194	.086	.161	-.536
120	197	-.240	.105	.124	-.821
120	198	-.252	.102	.074	-.692
120	201	.030	.226	.650	-.857
120	202	-.093	.144	.366	-.640
120	203	-.321	.214	.440	-1.177
120	204	.065	.193	.595	-.844
120	205	-.011	.137	.598	-.506
120	206	-.074	.118	.321	-.555
120	207	-.102	.110	.264	-.525
120	208	-.223	.173	.304	-.946
120	209	-.221	.192	.301	-1.044
120	210	-.267	.204	.295	-1.355
120	211	-.152	.108	.266	-.512
120	212	.235	.218	.945	-.573
120	213	.209	.213	.961	-.656
120	214	-.198	.163	.390	-.918
120	215	-.210	.105	.267	-.692
120	216	-.177	.168	.423	-.835
120	217	-.036	.270	.830	-.787
120	218	.197	.237	.991	-.842
120	219	-.243	.116	.207	-.643
120	220	-.208	.116	.203	-.687
120	221	.191	.215	.841	-.515
120	222	.156	.200	.854	-.605
120	223	-.186	.158	.354	-.920
120	224	-.214	.163	.324	-.980
120	225	-.136	.136	.359	-.791
120	226	-.160	.155	.416	-.916
120	227	-.184	.162	.345	-.713
120	228	-.096	.228	.581	-.841
120	229	.033	.168	.452	-.589

APPENDIX A -- PRESSURE DATA:

BASS BROTHERS BUILDING - PHASE II, DALLAS

WD	TAP	CPMEAN	CPRMS	CPMAX	CPMIN
120	230	-.007	.153	.479	-.553
120	231	-.070	.114	.357	-.544
120	232	-.102	.095	.251	-.426
120	233	-.201	.139	.348	-.764
120	234	-.176	.159	.367	-1.034
120	235	-.201	.164	.375	-.839
120	236	-.192	.161	.388	-.708
120	237	-.032	.188	.480	-.582
120	238	.020	.168	.496	-.637
120	239	.018	.109	.361	-.413
120	240	-.083	.108	.341	-.600
120	241	-.089	.088	.245	-.435
120	242	-.045	.129	.344	-.468
120	243	-.129	.100	.232	-.514
120	244	-.199	.098	.094	-.544
120	245	-.173	.099	.205	-.726
120	247	-.057	.120	.355	-.607
120	248	-.234	.165	.338	-.917
120	249	-.149	.137	.234	-.863
120	250	-.174	.159	.259	-1.343
120	251	-.176	.183	.315	-1.037
120	252	-.123	.186	.474	-.703
120	253	-.003	.155	.459	-.626
120	254	-.135	.152	.330	-1.023
120	255	-.139	.115	.223	-.670
120	256	-.163	.110	.214	-.577
120	257	-.180	.092	.169	-.562
120	258	-.217	.175	.350	-1.184
120	259	-.108	.143	.272	-.839
120	260	-.148	.175	.310	-.879
120	261	-.118	.161	.372	-.675
120	262	-.011	.164	.491	-.741
120	263	.040	.107	.413	-.338
120	264	-.069	.099	.247	-.448
120	265	-.142	.098	.226	-.511
120	266	-.214	.167	.280	-.914
120	267	-.100	.137	.296	-.676
120	268	-.100	.167	.463	-.888
120	269	.019	.121	.453	-.443
120	270	-.155	.103	.192	-.551
120	271	-.030	.127	.385	-.562
120	272	-.124	.097	.190	-.528
120	273	-.180	.206	.461	-.981
120	274	-.057	.141	.445	-.625
120	275	-.028	.078	.256	-.260
120	276	-.127	.093	.223	-.449
120	277	-.294	.114	.068	-.878
120	278	.020	.179	.642	-.371
120	279	-.083	.107	.232	-.438
120	280	-.013	.101	.324	-.361

WD	TAP	CPMEAN	CPRMS	CPMAX	CPMIN
120	281	-.116	.090	.184	-.393
120	301	-.072	.142	.357	-.650
120	302	.234	.154	.720	-.340
120	303	-.250	.113	.154	-.639
120	304	-.207	.107	.135	-.554
120	305	-.100	.116	.294	-.624
120	306	.049	.114	.514	-.297
120	307	.186	.127	.581	-.209
120	308	.422	.171	.943	-.050
120	309	.403	.186	1.011	-.125
120	310	-.098	.137	.362	-.746
120	311	.157	.128	.706	-.284
120	312	.155	.140	.691	-.335
120	313	.415	.162	.987	-.046
120	314	.417	.156	.951	-.060
120	315	.476	.148	.971	-.008
120	316	-.246	.201	.263	-1.037
120	317	.223	.136	.736	-.315
120	318	.411	.147	.915	-.026
120	319	.456	.132	.945	.091
120	320	.453	.142	.982	.053
120	321	.491	.156	1.001	-.007
120	322	.461	.167	1.048	-.014
120	323	.416	.165	1.053	-.062
120	324	-.236	.154	.265	-.825
120	325	.199	.128	.785	-.286
120	326	.318	.138	.836	-.139
120	327	.407	.140	.878	-.049
120	328	.424	.121	.862	.113
120	329	.452	.139	1.014	.115
120	330	.421	.164	1.032	.013
120	331	.359	.158	1.029	-.103
120	332	-.266	.241	.222	-.804
120	333	.175	.122	.754	-.177
120	334	.272	.131	.863	-.164
120	335	.368	.138	.920	-.118
120	336	.375	.113	.770	.015
120	337	.356	.147	.862	-.124
120	338	.355	.128	.794	-.054
120	339	.278	.133	.846	-.158
120	340	-.422	.113	-.058	-.907
120	341	-.336	.200	.270	-1.072
120	342	.069	.116	.503	-.271
120	343	.234	.118	.719	-.099
120	344	.260	.130	.786	-.150
120	345	.310	.125	.821	-.035
120	346	.307	.120	.769	-.025
120	347	.311	.126	.794	-.042
120	348	.190	.138	.728	-.196
120	349	-.276	.132	.121	-.852

WD	TAP	CPMEAN	CPRMS	CPMAX	CPMIN
120	350	-.146	.126	.318	-.634
120	351	.371	.138	.917	.002
120	352	.046	.170	.571	-.664
120	353	.193	.157	.645	-.412
120	354	.170	.116	.637	-.256
120	355	-.043	.104	.341	-.559
120	356	.048	.105	.446	-.477
120	357	.184	.106	.603	-.236
120	358	.219	.116	.575	-.155
120	359	.282	.117	.736	-.177
120	360	.223	.127	.807	-.170
120	361	.149	.130	.762	-.376
120	362	-.105	.082	.136	-.386
120	363	-.134	.116	.375	-.599
120	364	.042	.112	.502	-.310
120	365	.236	.130	.712	-.189
120	366	.276	.109	.681	-.206
120	401	-.263	.123	.111	-.849
120	402	-.373	.140	.045	-1.320
120	403	-.322	.115	.066	-.923
120	404	-.271	.094	.012	-.571
120	405	-.290	.108	.059	-.742
120	406	-.234	.104	.091	-.563
120	407	-.285	.110	.062	-.636
120	408	-.315	.123	.033	-.893
120	409	-.277	.093	.023	-.635
120	410	-.259	.101	.057	-.613
120	411	-.303	.104	.014	-.670
120	412	-.274	.101	.030	-.642
120	413	-.359	.107	-.032	-.753
120	414	-.301	.112	.059	-.736
120	415	-.279	.111	.126	-.683
120	416	-.327	.114	.077	-.753
120	417	-.286	.107	.134	-.660
120	418	-.230	.082	.055	-.509
120	419	-.212	.090	.110	-.504
120	420	-.254	.096	.056	-.587
120	421	-.234	.098	.071	-.574
120	422	-.299	.104	.051	-.912
120	423	-.367	.115	-.018	-.884
120	424	-.348	.101	-.036	-.707
120	425	-.259	.091	.050	-.578
120	426	-.309	.092	.004	-.635
120	427	-.289	.090	.009	-.595
120	428	-.248	.092	.016	-.574
120	429	-.233	.105	.080	-.616
120	430	-.358	.123	.032	-.960
120	431	-.333	.113	.009	-.746
120	432	-.291	.088	-.010	-.610
120	433	-.272	.097	.013	-.634

APPENDIX A -- PRESSURE DATA: BASS BROTHERS BUILDING - PHASE II, DALLAS

WD	TAP	CPMEAN	CPRMS	CPMAX	CPMIN
120	434	-.327	.100	-.039	-.692
120	435	-.295	.096	-.002	-.626
120	436	-.254	.080	.002	-.626
120	437	-.243	.093	.069	-.708
120	438	-.327	.115	.052	-.824
120	439	-.454	.134	-.023	-1.314
120	440	-.378	.124	.032	-1.206
120	441	-.371	.108	-.077	-.996
120	442	-.296	.102	-.025	-.737
120	443	-.390	.106	-.066	-.772
120	444	-.334	.103	-.010	-.711
120	445	-.342	.095	.041	-.672
120	446	-.306	.102	.112	-.655
120	447	-.417	.108	.045	-.783
120	448	-.342	.103	.109	-.703
120	449	-.407	.110	-.108	-.861
120	450	-.313	.107	.007	-.794
120	451	-.439	.111	-.125	-.836
120	452	-.297	.107	.059	-.754
120	453	-.324	.114	.035	-1.028
120	454	-.299	.108	.034	-.679
120	455	-.449	.127	-.085	-1.087
120	456	-.456	.142	-.040	-1.333
120	457	-.376	.145	.053	-1.015
120	458	-.340	.153	.185	-.928
120	459	-.372	.118	.030	-1.116
120	460	-.279	.104	.071	-.802
120	461	-.469	.138	-.048	-1.031
120	801	-.238	.105	.114	-.595
120	802	-.370	.115	.053	-.872
120	803	-.265	.100	.113	-.618
120	804	-.151	.119	.294	-.579
120	805	.041	.101	.470	-.263
120	806	.077	.118	.605	-.323
120	807	-.270	.104	.126	-.661
120	808	-.251	.089	.057	-.539
120	809	-.273	.102	.089	-.633
120	810	-.082	.148	.399	-.835
120	901	.256	.121	.792	-.096
120	902	.389	.119	.862	.032
120	903	-.667	.181	-.060	-1.256
120	904	-.412	.139	-.019	-1.004
120	905	-.259	.102	.045	-.690
120	906	-.291	.112	.046	-.691
120	907	-.300	.105	.083	-.624
120	908	.009	.175	.592	-.535
120	909	-.304	.110	.099	-.864
120	910	-.144	.124	.291	-.676
120	911	-.315	.121	.158	-.749
120	912	-.295	.119	.178	-.690

WD	TAP	CPMEAN	CPRMS	CPMAX	CPMIN
120	913	-.127	.114	.216	-.628
130	101	-.259	.110	.131	-.690
130	102	-.194	.125	.204	-.794
130	103	-.218	.121	.202	-.667
130	104	-.201	.115	.193	-.631
130	105	-.147	.107	.185	-.550
130	106	-.307	.117	.051	-.826
130	107	-.339	.119	.049	-.813
130	108	-.328	.127	.124	-.783
130	109	-.235	.097	.093	-.606
130	110	-.295	.107	.131	-.745
130	111	-.281	.106	.141	-.650
130	112	-.325	.112	.097	-.712
130	113	-.199	.135	.323	-.758
130	114	-.238	.140	.267	-.790
130	115	-.256	.136	.240	-.935
130	116	-.186	.091	.095	-.523
130	117	-.204	.127	.244	-.724
130	118	-.205	.125	.245	-.755
130	119	-.196	.107	.192	-.582
130	120	-.248	.107	.144	-.667
130	121	-.243	.107	.152	-.631
130	122	-.257	.111	.100	-.647
130	123	-.268	.104	.054	-.651
130	124	-.250	.158	.278	-1.309
130	125	-.229	.144	.287	-1.224
130	126	-.172	.090	.114	-.653
130	127	-.200	.114	.167	-.643
130	128	-.283	.122	.090	-.922
130	129	-.344	.133	.158	-.953
130	130	-.252	.117	.143	-.694
130	131	-.182	.157	.371	-1.395
130	132	-.187	.138	.329	-.977
130	133	-.154	.103	.291	-.570
130	134	-.153	.106	.261	-.557
130	135	-.128	.096	.213	-.551
130	136	-.196	.107	.323	-.630
130	137	-.246	.110	.185	-.725
130	138	-.264	.107	.235	-.693
130	139	-.286	.114	.124	-.729
130	140	-.144	.143	.372	-.885
130	141	-.145	.125	.307	-.721
130	142	-.131	.106	.236	-.517
130	143	-.143	.098	.262	-.469
130	144	-.112	.097	.250	-.547
130	145	-.173	.110	.306	-.634
130	146	-.219	.115	.216	-.758
130	147	-.233	.118	.383	-.800
130	148	-.219	.117	.313	-.711
130	149	-.185	.144	.346	-.926

WD	TAP	CPMEAN	CPRMS	CPMAX	CPMIN
130	150	-.192	.124	.295	-.728
130	151	-.102	.073	.254	-.393
130	152	-.162	.108	.320	-.516
130	153	-.194	.112	.139	-.623
130	154	-.227	.112	.108	-.649
130	155	-.220	.110	.090	-.630
130	156	-.178	.122	.194	-.945
130	157	-.191	.119	.242	-.838
130	158	-.157	.102	.172	-.528
130	159	-.137	.099	.165	-.441
130	160	-.135	.095	.217	-.514
130	161	-.186	.105	.171	-.631
130	162	-.245	.110	.133	-.636
130	163	-.243	.109	.135	-.611
130	164	-.211	.102	.229	-.604
130	165	-.158	.101	.182	-.732
130	166	-.155	.100	.295	-.567
130	167	-.153	.100	.378	-.546
130	168	-.104	.084	.185	-.366
130	169	-.174	.108	.205	-.649
130	170	-.235	.127	.191	-.732
130	171	-.265	.130	.122	-.828
130	172	-.223	.103	.114	-.706
130	173	-.275	.131	.116	-1.022
130	174	-.150	.109	.324	-.526
130	176	-.173	.112	.213	-.662
130	177	-.177	.108	.168	-.642
130	178	-.189	.107	.155	-.627
130	179	-.180	.103	.291	-.510
130	180	-.152	.095	.170	-.487
130	181	-.251	.129	.197	-.874
130	182	-.196	.112	.149	-.676
130	183	-.189	.119	.231	-.638
130	184	-.114	.096	.293	-.472
130	185	-.191	.111	.190	-.577
130	186	-.170	.121	.201	-.693
130	187	-.162	.117	.190	-.638
130	188	-.096	.099	.249	-.392
130	189	-.159	.123	.236	-.558
130	190	-.201	.115	.226	-.629
130	191	-.214	.133	.168	-.737
130	192	-.105	.087	.170	-.426
130	193	-.146	.112	.197	-.566
130	194	-.148	.111	.227	-.583
130	195	-.153	.114	.258	-.570
130	196	-.125	.090	.218	-.412
130	197	-.206	.125	.288	-.851
130	198	-.221	.118	.240	-.758
130	201	-.246	.221	.541	-1.099
130	202	-.184	.138	.262	-.980

APPENDIX A -- PRESSURE DATA: BASS BROTHERS BUILDING - PHASE II, DALLAS

WD	TAP	CPMEAN	CPRMS	CPMAX	CPMIN
130	203	-.433	.170	.076	-1.253
130	204	-.173	.205	.557	-.811
130	205	-.063	.157	.478	-.638
130	206	-.101	.124	.278	-.620
130	207	-.130	.114	.205	-.565
130	208	-.341	.169	.148	-1.005
130	209	-.384	.191	.176	-1.112
130	210	-.438	.198	.169	-1.415
130	211	-.183	.125	.260	-.730
130	212	.014	.256	1.094	-.837
130	213	.031	.269	.846	-.813
130	214	-.174	.168	.474	-.926
130	215	-.222	.133	.205	-.785
130	216	-.306	.144	.091	-.971
130	217	-.316	.180	.481	-.963
130	218	-.024	.261	.911	-1.239
130	219	-.251	.142	.169	-.837
130	220	-.226	.143	.362	-.802
130	221	-.173	.221	.590	-.859
130	222	-.145	.274	.859	-1.049
130	223	-.193	.174	.395	-.976
130	224	-.307	.129	.109	-.894
130	225	-.254	.118	.157	-.658
130	226	-.284	.135	.187	-.746
130	227	-.324	.138	.093	-.793
130	228	-.331	.168	.543	-1.037
130	229	-.275	.180	.392	-.856
130	230	-.228	.190	.396	-1.045
130	231	-.223	.196	.396	-1.014
130	232	-.224	.179	.292	-1.148
130	233	-.278	.124	.151	-.941
130	234	-.298	.139	.155	-1.072
130	235	-.331	.143	.139	-1.014
130	236	-.332	.143	.168	-.868
130	237	-.273	.154	.272	-.842
130	238	-.213	.192	.330	-.995
130	239	-.117	.141	.324	-.662
130	240	-.157	.166	.339	-.842
130	241	-.126	.167	.354	-1.190
130	242	-.144	.181	.428	-.856
130	243	-.155	.167	.303	-.809
130	244	-.169	.161	.344	-1.131
130	245	-.181	.123	.206	-.691
130	247	-.143	.167	.466	-.737
130	248	-.356	.166	.162	-1.191
130	249	-.291	.147	.162	-.834
130	250	-.326	.171	.194	-1.106
130	251	-.340	.179	.260	-1.281
130	252	-.326	.210	.457	-1.048
130	253	-.169	.181	.397	-.902

WD	TAP	CPMEAN	CPRMS	CPMAX	CPMIN
130	254	-.241	.214	.306	-1.442
130	255	-.161	.150	.336	-.801
130	256	-.158	.141	.276	-.760
130	257	-.147	.124	.231	-.787
130	258	-.352	.176	.146	-1.494
130	259	-.304	.157	.148	-.985
130	260	-.355	.199	.215	-1.642
130	261	-.314	.173	.191	-.975
130	262	-.189	.199	.490	-.875
130	263	-.012	.137	.393	-.481
130	264	-.037	.118	.415	-.484
130	265	-.085	.109	.344	-.553
130	266	-.366	.192	.177	-1.102
130	267	-.302	.155	.143	-1.204
130	268	-.301	.185	.299	-1.134
130	269	-.081	.180	.497	-.921
130	270	-.115	.099	.251	-.491
130	271	-.131	.143	.352	-.654
130	272	-.096	.102	.244	-.468
130	273	-.321	.215	.361	-1.121
130	274	-.147	.165	.325	-.827
130	275	-.044	.080	.229	-.392
130	276	-.118	.095	.256	-.470
130	277	-.235	.123	.226	-.748
130	278	-.090	.145	.522	-.764
130	279	-.151	.100	.199	-.506
130	280	-.058	.108	.334	-.518
130	281	-.102	.090	.172	-.404
130	301	.039	.141	.467	-.498
130	302	.238	.158	.757	-.230
130	303	-.217	.145	.499	-.638
130	304	-.159	.136	.274	-.660
130	305	-.085	.136	.608	-.551
130	306	.060	.124	.650	-.308
130	307	.168	.118	.645	-.167
130	308	.318	.163	.819	-.216
130	309	.264	.173	.787	-.232
130	310	-.015	.124	.423	-.520
130	311	.193	.130	.710	-.193
130	312	.162	.137	.686	-.277
130	313	.397	.159	.945	-.083
130	314	.412	.155	.927	-.050
130	315	.500	.144	1.056	.126
130	316	-.056	.166	.407	-.975
130	317	.292	.148	.874	-.139
130	318	.424	.150	.975	.010
130	319	.466	.144	.975	.069
130	320	.470	.157	1.046	.040
130	321	.479	.150	1.015	.044
130	322	.408	.168	1.016	.006

WD	TAP	CPMEAN	CPRMS	CPMAX	CPMIN
130	323	.331	.160	.888	-.074
130	324	-.097	.154	.301	-.846
130	325	.270	.139	.800	-.134
130	326	.353	.140	.817	-.057
130	327	.421	.140	.894	.003
130	328	.421	.133	.884	-.079
130	329	.443	.151	.983	-.119
130	330	.382	.171	.918	-.307
130	331	.282	.149	.780	-.203
130	332	-.151	.146	.407	-.637
130	333	.238	.130	.733	-.186
130	334	.312	.135	.837	-.134
130	335	.390	.138	.919	-.098
130	336	.385	.133	.798	.005
130	337	.337	.138	.838	-.067
130	338	.326	.140	.836	-.089
130	339	.195	.128	.665	-.234
130	340	-.465	.143	-.016	-1.360
130	341	-.210	.166	.279	-.972
130	342	.101	.126	.668	-.307
130	343	.252	.128	.798	-.161
130	344	.267	.150	.843	-.179
130	345	.308	.141	.857	-.118
130	346	.286	.119	.744	-.058
130	347	.269	.125	.819	-.134
130	348	.092	.144	.757	-.344
130	349	-.200	.136	.253	-.715
130	350	-.078	.132	.352	-.600
130	351	.333	.136	.975	-.029
130	352	.013	.170	.671	-.586
130	353	.119	.167	.751	-.410
130	354	.050	.132	.720	-.453
130	355	.017	.118	.402	-.893
130	356	.053	.137	.457	-.858
130	357	.195	.131	.595	-.522
130	358	.234	.119	.674	-.356
130	359	.266	.123	.714	-.324
130	360	.166	.130	.731	-.241
130	361	.027	.141	.519	-.643
130	362	-.056	.086	.307	-.396
130	363	.030	.138	.525	-.509
130	364	.121	.135	.661	-.313
130	365	.276	.134	.732	-.126
130	366	.254	.131	.803	-.168
130	401	-.344	.154	.051	-1.190
130	402	-.373	.140	.176	-.855
130	403	-.314	.128	.114	-.784
130	404	-.291	.099	-.002	-.745
130	405	-.309	.107	.069	-.718
130	406	-.284	.107	.060	-.737

APPENDIX A -- PRESSURE DATA: BASS BROTHERS BUILDING - PHASE II, DALLAS

WD	TAP	CPMEAN	CPRMS	CPMAX	CPMIN
130	407	-.337	.113	.026	-.825
130	408	-.328	.136	.082	-1.085
130	409	-.283	.113	.031	-.809
130	410	-.267	.120	.092	-.827
130	411	-.315	.121	.034	-.777
130	412	-.291	.113	.046	-.743
130	413	-.411	.109	.063	-.821
130	414	-.291	.112	.050	-.953
130	415	-.270	.115	.100	-1.042
130	416	-.319	.113	.062	-.808
130	417	-.287	.101	.073	-.687
130	418	-.255	.088	.033	-.573
130	419	-.241	.098	.107	-.592
130	420	-.293	.101	.030	-.659
130	421	-.272	.099	.051	-.618
130	422	-.298	.133	.033	-.974
130	423	-.368	.125	.086	-.816
130	424	-.354	.116	-.001	-.888
130	425	-.244	.112	.051	-.628
130	426	-.302	.114	.008	-.702
130	427	-.278	.110	.039	-.644
130	428	-.242	.099	.088	-.607
130	429	-.229	.109	.148	-.665
130	430	-.334	.180	.190	-1.222
130	431	-.309	.161	.229	-.898
130	432	-.306	.119	.136	-.828
130	433	-.307	.138	.062	-.986
130	434	-.354	.134	.017	-.975
130	435	-.341	.136	.005	-1.064
130	436	-.288	.100	.001	-.752
130	437	-.268	.113	.072	-.856
130	438	-.270	.154	.208	-1.573
130	439	-.474	.198	.170	-1.578
130	440	-.385	.177	.100	-1.305
130	441	-.377	.133	.040	-1.151
130	442	-.287	.121	.090	-.945
130	443	-.405	.121	-.014	-.879
130	444	-.339	.121	.035	-.865
130	445	-.377	.133	.028	-1.116
130	446	-.316	.142	.116	-1.443
130	447	-.474	.149	-.006	-1.345
130	448	-.374	.139	.074	-1.089
130	449	-.369	.146	.040	-1.076
130	450	-.274	.137	.142	-.975
130	451	-.431	.128	-.068	-.933
130	452	-.303	.124	.037	-.861
130	453	-.348	.143	.044	-1.079
130	454	-.289	.131	.085	-.925
130	455	-.509	.169	-.016	-1.217
130	456	-.493	.163	-.023	-1.249
130	457	-.328	.152	.115	-1.232
130	458	-.229	.164	.263	-1.080
130	459	-.395	.155	.041	-1.489
130	460	-.277	.135	.075	-1.161
130	461	-.413	.142	.130	-1.087
130	801	-.228	.128	.219	-.665
130	802	-.372	.150	.090	-.964
130	803	-.203	.117	.173	-.618
130	804	-.060	.114	.462	-.471
130	805	.088	.105	.560	-.260
130	806	.057	.127	.631	-.387
130	807	-.243	.119	.207	-.699
130	808	-.222	.103	.115	-.590
130	809	-.210	.121	.203	-.661
130	810	-.215	.167	.338	-.875
130	901	.276	.124	.946	-.085
130	902	.384	.130	.939	.065
130	903	-.725	.215	.075	-1.484
130	904	-.398	.136	-.016	-1.104
130	905	-.302	.112	.067	-.899
130	906	-.322	.124	.071	-.722
130	907	-.308	.114	.034	-.853
130	908	-.135	.171	.370	-.657
130	909	-.303	.111	.085	-.766
130	910	-.116	.119	.276	-.564
130	911	-.335	.125	.058	-.859
130	912	-.295	.119	.096	-.739
130	913	-.100	.106	.208	-.700
140	101	-.232	.116	.184	-.635
140	102	-.218	.131	.169	-.817
140	103	-.232	.124	.142	-.725
140	104	-.220	.118	.171	-.639
140	105	-.182	.110	.188	-.736
140	106	-.320	.131	.084	-.900
140	107	-.354	.137	.058	-.975
140	108	-.280	.126	.137	-.802
140	109	-.251	.106	.114	-.642
140	110	-.303	.118	.134	-.764
140	111	-.272	.114	.144	-.649
140	112	-.299	.124	.094	-.728
140	113	-.213	.122	.204	-.750
140	114	-.245	.123	.164	-.829
140	115	-.264	.119	.143	-.717
140	116	-.191	.090	.082	-.542
140	117	-.220	.114	.124	-.667
140	118	-.225	.110	.099	-.662
140	119	-.206	.102	.095	-.549
140	120	-.242	.102	.058	-.573
140	121	-.227	.102	.079	-.578
140	122	-.231	.118	.125	-.792
140	123	-.247	.121	.200	-.655
140	124	-.278	.139	.106	-.932
140	125	-.255	.122	.145	-.879
140	126	-.172	.086	.127	-.560
140	127	-.216	.105	.179	-.655
140	128	-.251	.113	.134	-.791
140	129	-.285	.126	.147	-.822
140	130	-.219	.111	.112	-.581
140	131	-.248	.139	.191	-.842
140	132	-.241	.117	.124	-.719
140	133	-.194	.099	.123	-.563
140	134	-.203	.103	.105	-.547
140	135	-.175	.098	.159	-.498
140	136	-.216	.113	.154	-.578
140	137	-.251	.121	.168	-.656
140	138	-.261	.123	.139	-.649
140	139	-.272	.126	.098	-.842
140	140	-.236	.150	.265	-.902
140	141	-.217	.128	.203	-.951
140	142	-.185	.107	.142	-.560
140	143	-.187	.099	.198	-.519
140	144	-.160	.094	.162	-.550
140	145	-.217	.112	.115	-.755
140	146	-.258	.117	.077	-.781
140	147	-.269	.121	.090	-.732
140	148	-.225	.122	.168	-.621
140	149	-.237	.154	.215	-.840
140	150	-.215	.127	.172	-.709
140	151	-.115	.083	.160	-.420
140	152	-.190	.114	.212	-.567
140	153	-.222	.112	.172	-.710
140	154	-.257	.112	.130	-.709
140	155	-.249	.111	.128	-.660
140	156	-.195	.127	.187	-.712
140	157	-.189	.123	.185	-.710
140	158	-.175	.099	.177	-.647
140	159	-.156	.099	.183	-.554
140	160	-.153	.102	.188	-.610
140	161	-.223	.120	.170	-.732
140	162	-.276	.130	.083	-.807
140	163	-.263	.127	.083	-.822
140	164	-.204	.117	.204	-.695
140	165	-.159	.136	.294	-.940
140	166	-.136	.121	.241	-.675
140	167	-.144	.117	.215	-.654
140	168	-.064	.092	.267	-.392
140	169	-.215	.131	.229	-.767
140	170	-.310	.148	.125	-1.298
140	171	-.311	.138	.115	-.876
140	172	-.224	.108	.066	-.829

APPENDIX A -- PRESSURE DATA:

BASS BROTHERS BUILDING - PHASE II, DALLAS

WD	TAP	CPMEAN	CPRMS	CPMAX	CPMIN
140	173	-.271	.133	.092	-1.093
140	174	-.150	.104	.241	-.572
140	176	-.142	.101	.238	-.600
140	177	-.149	.116	.224	-.786
140	178	-.210	.120	.159	-.680
140	179	-.185	.098	.139	-.498
140	180	-.127	.103	.158	-.604
140	181	-.234	.137	.252	-1.037
140	182	-.162	.127	.279	-.683
140	183	-.137	.131	.307	-.675
140	184	-.121	.099	.248	-.692
140	185	-.187	.113	.259	-.690
140	186	-.100	.111	.220	-.545
140	187	-.116	.112	.251	-.538
140	188	-.034	.097	.319	-.437
140	189	-.158	.135	.245	-.795
140	190	-.222	.131	.204	-.821
140	191	-.138	.124	.261	-.668
140	192	-.039	.090	.246	-.401
140	193	-.067	.107	.305	-.497
140	194	-.082	.112	.274	-.477
140	195	-.115	.121	.316	-.751
140	196	-.096	.089	.206	-.458
140	197	-.197	.128	.250	-.757
140	198	-.214	.118	.218	-.749
140	201	-.408	.186	.340	-1.119
140	202	-.261	.185	.206	-1.081
140	203	-.434	.159	.004	-1.107
140	204	-.353	.139	.185	-.874
140	205	-.245	.159	.403	-.934
140	206	-.216	.145	.242	-.874
140	207	-.214	.133	.186	-.840
140	208	-.340	.138	.074	-.817
140	209	-.383	.150	.058	-.927
140	210	-.428	.154	.009	-1.027
140	211	-.234	.133	.360	-.849
140	212	-.279	.189	.666	-.955
140	213	-.278	.224	.675	-1.207
140	214	-.299	.190	.258	-1.053
140	215	-.260	.140	.216	-.813
140	216	-.314	.120	.031	-.753
140	217	-.385	.135	.093	-1.016
140	218	-.247	.176	.519	-1.100
140	219	-.276	.140	.261	-.781
140	220	-.258	.144	.258	-.954
140	221	-.329	.144	.371	-1.039
140	222	-.348	.197	.584	-1.284
140	223	-.320	.180	.289	-1.099
140	224	-.337	.116	.036	-.771
140	225	-.291	.110	.082	-.795

WD	TAP	CPMEAN	CPRMS	CPMAX	CPMIN
140	226	-.318	.123	.121	-.864
140	227	-.357	.128	.116	-.902
140	228	-.377	.141	.039	-1.219
140	229	-.336	.135	.124	-.819
140	230	-.303	.147	.315	-.876
140	231	-.325	.166	.284	-1.081
140	232	-.330	.168	.202	-1.202
140	233	-.296	.107	.085	-.931
140	234	-.321	.121	.078	-.993
140	235	-.354	.125	.045	-1.131
140	236	-.356	.126	.052	-1.122
140	237	-.334	.134	.023	-.830
140	238	-.370	.159	.113	-1.123
140	239	-.241	.139	.255	-.735
140	240	-.302	.180	.368	-1.118
140	241	-.277	.190	.362	-1.619
140	242	-.284	.162	.297	-1.003
140	243	-.300	.190	.320	-1.207
140	244	-.304	.219	.232	-1.508
140	245	-.266	.137	.267	-.881
140	247	-.270	.180	.352	-.969
140	248	-.390	.150	.071	-1.012
140	249	-.325	.129	.047	-.932
140	250	-.358	.147	.063	-1.050
140	251	-.409	.170	.094	-1.199
140	252	-.404	.161	.036	-1.022
140	253	-.340	.149	.190	-.884
140	254	-.422	.214	.171	-1.373
140	255	-.294	.174	.355	-.901
140	256	-.275	.170	.313	-1.029
140	257	-.208	.159	.267	-.988
140	258	-.429	.170	.074	-1.179
140	259	-.382	.141	.026	-.945
140	260	-.438	.177	.062	-1.207
140	261	-.416	.166	.192	-1.191
140	262	-.341	.204	.599	-1.192
140	263	-.143	.148	.485	-.581
140	264	-.084	.138	.341	-.597
140	265	-.109	.128	.375	-.706
140	266	-.444	.177	.039	-1.305
140	267	-.368	.141	.050	-.945
140	268	-.392	.169	.132	-1.048
140	269	-.220	.214	.434	-1.060
140	270	-.090	.119	.339	-.576
140	271	-.304	.138	.178	-.783
140	272	-.109	.117	.254	-.593
140	273	-.497	.212	.276	-1.397
140	274	-.349	.179	.239	-1.087
140	275	-.057	.101	.211	-.517
140	276	-.092	.109	.260	-.528

WD	TAP	CPMEAN	CPRMS	CPMAX	CPMIN
140	277	-.143	.118	.219	-.610
140	278	-.227	.141	.288	-.816
140	279	-.261	.125	.037	-.953
140	280	-.164	.165	.437	-1.014
140	281	-.095	.118	.346	-.630
140	301	.124	.144	.579	-.324
140	302	.218	.173	.902	-.275
140	303	-.069	.178	.661	-.688
140	304	-.028	.139	.524	-.475
140	305	-.004	.150	.633	-.481
140	306	.105	.131	.639	-.314
140	307	.209	.113	.646	-.231
140	308	.321	.147	.738	-.170
140	309	.236	.146	.692	-.264
140	310	.087	.134	.522	-.552
140	311	.261	.130	.743	-.139
140	312	.197	.138	.690	-.255
140	313	.439	.150	.989	.041
140	314	.459	.150	.990	.070
140	315	.523	.146	.939	.073
140	316	.064	.134	.539	-.504
140	317	.367	.149	.866	-.160
140	318	.458	.151	.939	.001
140	319	.470	.138	.930	.076
140	320	.474	.152	.981	.049
140	321	.488	.153	1.060	.022
140	322	.354	.148	.916	-.082
140	323	.255	.137	.767	-.161
140	324	.021	.113	.424	-.440
140	325	.336	.135	.927	-.123
140	326	.380	.138	.903	-.088
140	327	.423	.135	.879	-.047
140	328	.417	.114	.783	.047
140	329	.417	.126	.822	.017
140	330	.325	.138	.832	-.186
140	331	.196	.120	.741	-.309
140	332	-.092	.140	.581	-.562
140	333	.263	.128	.782	-.115
140	334	.302	.133	.793	-.129
140	335	.355	.134	.782	-.052
140	336	.368	.100	.731	.091
140	337	.335	.132	.738	-.031
140	338	.262	.117	.650	-.118
140	339	.108	.120	.526	-.298
140	340	-.568	.188	.260	-1.860
140	341	-.152	.153	.507	-.902
140	342	.122	.128	.640	-.255
140	343	.260	.124	.809	-.104
140	344	.243	.143	.863	-.186
140	345	.293	.132	.841	-.085

APPENDIX A -- PRESSURE DATA:

BASS BROTHERS BUILDING - PHASE II, DALLAS

WD	TAP	CPMEAN	CPRMS	CPMAX	CPMIN
140	346	.268	.143	.762	-.140
140	347	.205	.136	.678	-.205
140	348	-.038	.148	.445	-.519
140	349	-.158	.136	.277	-.688
140	350	-.045	.135	.474	-.550
140	351	.407	.134	.991	.051
140	352	.005	.182	.655	-.740
140	353	.100	.171	.706	-.617
140	354	-.046	.128	.489	-.536
140	355	.027	.137	.473	-.737
140	356	.056	.164	.585	-.612
140	357	.209	.160	.786	-.574
140	358	.222	.134	.789	-.319
140	359	.249	.138	.867	-.264
140	360	.136	.147	.873	-.446
140	361	-.052	.149	.388	-.844
140	362	-.038	.091	.278	-.390
140	363	.093	.139	.622	-.508
140	364	.174	.142	.740	-.294
140	365	.320	.139	.839	-.191
140	366	.217	.137	.977	-.350
140	401	-.314	.131	.104	-.865
140	402	-.335	.140	.061	-1.009
140	403	-.250	.140	.227	-.916
140	404	-.293	.121	.145	-.732
140	405	-.361	.135	.003	-1.014
140	406	-.296	.133	.150	-.877
140	407	-.339	.134	.132	-.976
140	408	-.267	.161	.343	-1.217
140	409	-.254	.123	.288	-.773
140	410	-.255	.130	.296	-.816
140	411	-.317	.132	.078	-1.105
140	412	-.313	.127	.086	-.813
140	413	-.485	.147	.007	-1.082
140	414	-.298	.163	.239	-1.052
140	415	-.292	.170	.386	-1.065
140	416	-.331	.152	.382	-.942
140	417	-.290	.126	.233	-.817
140	418	-.288	.122	.077	-.843
140	419	-.269	.127	.105	-.815
140	420	-.309	.123	.062	-.719
140	421	-.288	.121	.071	-.697
140	422	-.269	.163	.179	-1.243
140	423	-.372	.198	.398	-1.156
140	424	-.390	.161	.437	-.997
140	425	-.246	.122	.285	-.700
140	426	-.347	.133	.078	-1.000
140	427	-.318	.125	.066	-.995
140	428	-.281	.108	.112	-.718
140	429	-.264	.119	.179	-.723

WD	TAP	CPMEAN	CPRMS	CPMAX	CPMIN
140	430	-.270	.180	.255	-1.104
140	431	-.260	.187	.516	-.992
140	432	-.245	.150	.362	-.738
140	433	-.270	.159	.301	-.853
140	434	-.363	.169	.123	-1.234
140	435	-.367	.180	.074	-1.471
140	436	-.314	.125	.016	-.963
140	437	-.290	.135	.082	-.976
140	438	-.188	.150	.317	-.807
140	439	-.350	.236	.439	-1.418
140	440	-.281	.221	.495	-1.334
140	441	-.363	.168	.277	-1.082
140	442	-.296	.155	.258	-1.137
140	443	-.463	.157	.011	-1.159
140	444	-.390	.164	.039	-1.100
140	445	-.444	.178	-.011	-1.405
140	446	-.362	.178	.154	-1.219
140	447	-.567	.194	-.085	-1.743
140	448	-.441	.175	.036	-1.399
140	449	-.323	.154	.382	-1.064
140	450	-.232	.153	.361	-.929
140	451	-.466	.156	-.006	-1.157
140	452	-.304	.150	.116	-1.214
140	453	-.380	.177	.048	-1.252
140	454	-.293	.167	.221	-1.012
140	455	-.563	.221	.003	-1.905
140	456	-.471	.211	.072	-1.585
140	457	-.281	.160	.144	-1.126
140	458	-.150	.151	.327	-.873
140	459	-.377	.170	.092	-1.031
140	460	-.266	.148	.170	-.930
140	461	-.461	.146	-.059	-1.135
140	801	-.203	.133	.224	-.792
140	802	-.362	.151	.096	-.977
140	803	-.217	.126	.178	-.702
140	804	-.045	.119	.496	-.481
140	805	.115	.103	.463	-.314
140	806	.065	.129	.495	-.381
140	807	-.236	.127	.157	-.877
140	808	-.201	.117	.233	-.742
140	809	-.110	.122	.261	-.669
140	810	-.350	.162	.299	-.917
140	901	.330	.149	1.417	-.128
140	902	.409	.137	1.005	-.006
140	903	-.647	.203	.069	-1.473
140	904	-.406	.129	.050	-.901
140	905	-.293	.104	.067	-.835
140	906	-.309	.127	.187	-.784
140	907	-.316	.116	.045	-.736
140	908	-.247	.136	.281	-.649

WD	TAP	CPMEAN	CPRMS	CPMAX	CPMIN
140	909	-.281	.114	.170	-.787
140	910	-.155	.123	.271	-.649
140	911	-.309	.134	.145	-.967
140	912	-.268	.149	.326	-1.188
140	913	-.150	.106	.193	-.764
150	101	-.219	.106	.101	-.586
150	102	-.217	.123	.165	-.843
150	103	-.230	.115	.137	-.700
150	104	-.221	.109	.125	-.610
150	105	-.174	.096	.143	-.539
150	106	-.329	.132	.135	-.991
150	107	-.366	.139	.130	-1.133
150	108	-.217	.111	.161	-.600
150	109	-.202	.097	.086	-.552
150	110	-.231	.108	.072	-.601
150	111	-.220	.109	.098	-.632
150	112	-.223	.116	.138	-.737
150	113	-.189	.108	.208	-.658
150	114	-.216	.112	.149	-.600
150	115	-.235	.110	.115	-.599
150	116	-.181	.081	.055	-.493
150	117	-.205	.099	.118	-.589
150	118	-.212	.098	.079	-.559
150	119	-.198	.102	.191	-.528
150	120	-.228	.102	.177	-.569
150	121	-.213	.103	.201	-.568
150	122	-.179	.106	.119	-.516
150	123	-.219	.109	.178	-.733
150	124	-.247	.113	.153	-.731
150	125	-.229	.104	.144	-.611
150	126	-.164	.078	.097	-.417
150	127	-.195	.103	.149	-.605
150	128	-.219	.109	.099	-.611
150	129	-.229	.113	.085	-.740
150	130	-.177	.100	.167	-.663
150	131	-.234	.119	.132	-.876
150	132	-.234	.101	.100	-.623
150	133	-.201	.096	.103	-.513
150	134	-.206	.096	.118	-.575
150	135	-.168	.090	.098	-.599
150	136	-.199	.102	.116	-.632
150	137	-.224	.109	.109	-.623
150	138	-.219	.109	.121	-.626
150	139	-.221	.118	.148	-.743
150	140	-.260	.138	.289	-.913
150	141	-.255	.117	.121	-.780
150	142	-.224	.107	.187	-.595
150	143	-.220	.100	.092	-.568
150	144	-.168	.098	.149	-.561
150	145	-.209	.111	.148	-.624

APPENDIX A -- PRESSURE DATA: BASS BROTHERS BUILDING - PHASE II, DALLAS

WD	TAP	CPMEAN	CPRMS	CPMAX	CPMIN
150	146	-.233	.115	.129	-.743
150	147	-.226	.116	.125	-.666
150	148	-.172	.114	.172	-.821
150	149	-.249	.132	.176	-.777
150	150	-.237	.113	.103	-.793
150	151	-.117	.083	.188	-.388
150	152	-.211	.106	.190	-.711
150	153	-.256	.126	.128	-.753
150	154	-.279	.125	.113	-.799
150	155	-.266	.123	.120	-.822
150	156	-.211	.123	.155	-.753
150	157	-.217	.123	.199	-.803
150	158	-.184	.107	.191	-.631
150	159	-.162	.105	.179	-.533
150	160	-.174	.109	.164	-.672
150	161	-.251	.128	.136	-.761
150	162	-.287	.141	.145	-.929
150	163	-.254	.134	.144	-.836
150	164	-.196	.126	.208	-.736
150	165	-.127	.125	.250	-.687
150	166	-.097	.118	.295	-.572
150	167	-.118	.111	.242	-.602
150	168	-.047	.089	.282	-.341
150	169	-.221	.141	.283	-.769
150	170	-.320	.159	.204	-1.136
150	171	-.316	.148	.149	-1.094
150	172	-.218	.113	.071	-.740
150	173	-.255	.141	.088	-1.194
150	174	-.140	.107	.265	-.538
150	176	-.152	.094	.154	-.543
150	177	-.103	.119	.392	-.742
150	178	-.212	.136	.184	-1.104
150	179	-.190	.107	.194	-.581
150	180	-.147	.102	.135	-.648
150	181	-.206	.122	.189	-.945
150	182	-.130	.122	.245	-.647
150	183	-.122	.117	.319	-.597
150	184	-.147	.098	.178	-.630
150	185	-.182	.107	.134	-.581
150	186	-.075	.108	.225	-.496
150	187	-.096	.111	.239	-.621
150	188	-.028	.094	.435	-.363
150	189	-.197	.136	.287	-.804
150	190	-.239	.123	.140	-.798
150	191	-.094	.113	.265	-.564
150	192	-.035	.095	.258	-.501
150	193	-.055	.109	.305	-.530
150	194	-.064	.116	.328	-.579
150	195	-.113	.124	.299	-.631
150	196	-.105	.089	.244	-.440

WD	TAP	CPMEAN	CPRMS	CPMAX	CPMIN
150	197	-.186	.119	.210	-.725
150	198	-.188	.111	.170	-.699
150	201	-.414	.155	.088	-.931
150	202	-.326	.200	.249	-.985
150	203	-.313	.121	.074	-.839
150	204	-.305	.136	.127	-1.142
150	205	-.298	.150	.248	-.971
150	206	-.272	.145	.226	-.878
150	207	-.252	.140	.162	-.831
150	208	-.240	.118	.119	-.799
150	209	-.280	.125	.115	-1.004
150	210	-.314	.128	.065	-1.086
150	211	-.260	.132	.172	-.811
150	212	-.285	.128	.146	-.941
150	213	-.320	.149	.273	-1.049
150	214	-.329	.152	.188	-.911
150	215	-.263	.129	.121	-.724
150	216	-.231	.107	.142	-.968
150	217	-.308	.126	.142	-.961
150	218	-.238	.137	.239	-1.195
150	219	-.278	.125	.121	-.749
150	220	-.256	.115	.157	-.745
150	221	-.307	.123	.088	-.916
150	222	-.347	.155	.101	-1.147
150	223	-.322	.147	.158	-.968
150	224	-.295	.112	.089	-.760
150	225	-.242	.102	.058	-.691
150	226	-.266	.113	.059	-.781
150	227	-.306	.117	.069	-.890
150	228	-.316	.125	.162	-1.041
150	229	-.293	.112	.051	-.828
150	230	-.281	.117	.099	-.872
150	231	-.330	.137	.119	-1.030
150	232	-.333	.142	.084	-1.215
150	233	-.286	.115	.101	-.706
150	234	-.306	.127	.125	-.758
150	235	-.345	.131	.084	-.958
150	236	-.340	.130	.090	-.997
150	237	-.297	.118	.077	-.905
150	238	-.352	.149	.182	-.965
150	239	-.275	.121	.260	-.732
150	240	-.335	.164	.224	-1.058
150	241	-.304	.151	.238	-.925
150	242	-.316	.144	.145	-.951
150	243	-.350	.160	.105	-1.034
150	244	-.348	.172	.163	-1.253
150	245	-.290	.126	.113	-.791
150	247	-.320	.164	.274	-.893
150	248	-.369	.141	.056	-1.373
150	249	-.327	.119	.099	-.819

WD	TAP	CPMEAN	CPRMS	CPMAX	CPMIN
150	250	-.352	.135	.155	-.964
150	251	-.384	.161	.073	-1.295
150	252	-.420	.146	.088	-1.076
150	253	-.374	.147	.062	-.884
150	254	-.511	.219	.187	-1.582
150	255	-.352	.166	.336	-1.149
150	256	-.330	.160	.359	-1.168
150	257	-.283	.153	.206	-.876
150	258	-.429	.169	.054	-1.421
150	259	-.360	.144	.046	-1.524
150	260	-.406	.178	.110	-1.768
150	261	-.402	.160	.150	-1.147
150	262	-.356	.151	.299	-.944
150	263	-.204	.126	.330	-.705
150	264	-.120	.138	.312	-.575
150	265	-.134	.142	.330	-.835
150	266	-.443	.167	.027	-1.466
150	267	-.382	.143	.077	-.939
150	268	-.399	.170	.126	-1.068
150	269	-.287	.180	.355	-1.000
150	270	-.068	.137	.421	-.755
150	271	-.304	.134	.146	-1.153
150	272	-.118	.128	.293	-.757
150	273	-.481	.212	.308	-1.390
150	274	-.351	.176	.321	-1.331
150	275	-.059	.110	.354	-.577
150	276	-.079	.120	.273	-.715
150	277	-.117	.122	.262	-.598
150	278	-.226	.138	.249	-.733
150	279	-.298	.134	.109	-.987
150	280	-.188	.171	.369	-1.271
150	281	-.083	.126	.311	-.870
150	301	.204	.134	.686	-.558
150	302	.235	.157	.913	-.406
150	303	.164	.195	.823	-.736
150	304	.135	.156	.581	-.367
150	305	.127	.181	.787	-.592
150	306	.158	.130	.585	-.284
150	307	.246	.124	.715	-.340
150	308	.361	.157	.950	-.298
150	309	.251	.145	.766	-.361
150	310	.176	.169	.784	-.677
150	311	.338	.153	.772	-.103
150	312	.267	.161	.758	-.229
150	313	.491	.182	1.060	-.156
150	314	.513	.180	1.086	-.140
150	315	.539	.159	.981	.005
150	316	.138	.153	.735	-.473
150	317	.418	.180	.978	-.144
150	318	.488	.175	1.025	-.027

APPENDIX A -- PRESSURE DATA: BASS BROTHERS BUILDING - PHASE II, DALLAS

WD	TAP	CPMEAN	CPRMS	CPMAX	CPMIN
150	319	.526	.154	1.208	.085
150	320	.528	.169	1.246	.036
150	321	.490	.153	.971	.008
150	322	.360	.164	1.028	-.140
150	323	.251	.150	.835	-.200
150	324	.052	.129	.485	-.606
150	325	.344	.159	1.003	-.137
150	326	.374	.170	1.026	-.121
150	327	.416	.169	1.107	-.084
150	328	.436	.148	.981	-.032
150	329	.432	.163	1.024	-.048
150	330	.319	.171	.898	-.352
150	331	.176	.139	.725	-.291
150	332	-.056	.148	.518	-.594
150	333	.284	.146	.788	-.201
150	334	.310	.153	.789	-.176
150	335	.360	.152	.872	-.178
150	336	.340	.124	.827	-.056
150	337	.313	.134	.768	-.124
150	338	.233	.127	.743	-.148
150	339	.064	.117	.513	-.340
150	340	-.501	.224	.455	-1.809
150	341	-.110	.148	.358	-.787
150	342	.086	.114	.496	-.338
150	343	.236	.118	.663	-.177
150	344	.208	.147	.777	-.211
150	345	.266	.136	.796	-.122
150	346	.220	.128	.679	-.218
150	347	.169	.125	.629	-.255
150	348	-.083	.145	.461	-.578
150	349	-.136	.140	.374	-.663
150	350	-.031	.136	.501	-.501
150	351	.353	.150	1.057	-.108
150	352	-.017	.174	.682	-.685
150	353	.063	.162	.659	-.540
150	354	-.106	.124	.409	-.540
150	355	.041	.142	.612	-.718
150	356	.015	.175	.548	-.897
150	357	.164	.164	.971	-.565
150	358	.155	.155	.672	-.561
150	359	.196	.159	.696	-.642
150	360	.094	.157	.679	-.691
150	361	-.076	.166	.395	-1.066
150	362	-.000	.093	.305	-.375
150	363	.128	.147	.648	-.596
150	364	.167	.149	.872	-.322
150	365	.293	.142	.895	-.136
150	366	.163	.151	.789	-.490
150	401	-.273	.122	.104	-.814
150	402	-.315	.139	.134	-.966

WD	TAP	CPMEAN	CPRMS	CPMAX	CPMIN
150	403	-.181	.134	.497	-.796
150	404	-.268	.152	.199	-.755
150	405	-.407	.158	.147	-1.083
150	406	-.403	.217	.434	-1.393
150	407	-.496	.233	.131	-1.745
150	408	-.204	.145	.262	-.858
150	409	-.057	.207	.581	-.725
150	410	-.075	.251	.875	-.800
150	411	-.250	.203	.540	-.963
150	412	-.351	.178	.279	-1.132
150	413	-.524	.176	.010	-1.310
150	414	-.180	.128	.210	-.924
150	415	-.141	.214	.483	-.918
150	416	-.216	.230	.544	-1.019
150	417	-.226	.184	.457	-.753
150	418	-.304	.159	.206	-.833
150	419	-.302	.155	.253	-.886
150	420	-.345	.134	.095	-.934
150	421	-.315	.128	.129	-.865
150	422	-.214	.155	.224	-1.043
150	423	-.220	.237	.600	-1.179
150	424	-.302	.215	.430	-.958
150	425	-.195	.184	.409	-.842
150	426	-.367	.202	.271	-1.044
150	427	-.357	.183	.255	-1.188
150	428	-.295	.137	.064	-1.123
150	429	-.268	.147	.137	-1.035
150	430	-.217	.154	.245	-1.175
150	431	-.152	.196	.457	-.952
150	432	-.164	.184	.527	-.744
150	433	-.189	.197	.567	-.839
150	434	-.318	.205	.294	-1.305
150	435	-.357	.221	.215	-1.351
150	436	-.318	.146	.203	-.975
150	437	-.285	.161	.289	-1.151
150	438	-.163	.143	.336	-.759
150	439	-.252	.209	.460	-1.284
150	440	-.174	.195	.514	-1.083
150	441	-.271	.164	.383	-.892
150	442	-.195	.160	.333	-.955
150	443	-.373	.161	.053	-1.017
150	444	-.301	.168	.144	-.996
150	445	-.398	.168	.039	-1.267
150	446	-.300	.175	.191	-1.001
150	447	-.512	.200	-.008	-1.789
150	448	-.385	.174	.084	-1.250
150	449	-.279	.137	.106	-1.040
150	450	-.155	.146	.366	-.805
150	451	-.394	.174	.064	-1.114
150	452	-.232	.165	.237	-1.032

WD	TAP	CPMEAN	CPRMS	CPMAX	CPMIN
150	453	-.316	.196	.194	-1.301
150	454	-.200	.165	.366	-.870
150	455	-.447	.211	.111	-1.660
150	456	-.379	.230	.201	-1.386
150	457	-.269	.167	.135	-1.335
150	458	-.119	.156	.314	-.919
150	459	-.318	.161	.122	-1.175
150	460	-.215	.136	.125	-.952
150	461	-.424	.161	-.007	-1.370
150	801	-.159	.118	.189	-.700
150	802	-.350	.149	.043	-1.075
150	803	-.239	.129	.196	-.830
150	804	-.024	.134	.533	-.452
150	805	.131	.104	.546	-.232
150	806	.073	.128	.613	-.303
150	807	-.220	.121	.129	-.826
150	808	-.157	.109	.187	-.631
150	809	-.044	.111	.370	-.548
150	810	-.326	.173	.333	-1.061
150	901	.330	.142	1.036	-.072
150	902	.407	.148	1.023	-.022
150	903	-.520	.206	.255	-1.275
150	904	-.428	.141	.037	-.941
150	905	-.347	.116	.062	-.762
150	906	-.322	.132	.103	-.889
150	907	-.362	.140	.150	-.872
150	908	-.243	.123	.206	-.720
150	909	-.255	.122	.139	-.828
150	910	-.180	.127	.293	-.673
150	911	-.285	.166	.269	-.987
150	912	-.236	.164	.476	-.919
150	913	-.165	.110	.211	-.625
160	101	-.202	.103	.124	-.659
160	102	-.201	.111	.178	-.608
160	103	-.216	.109	.125	-.659
160	104	-.205	.106	.134	-.612
160	105	-.167	.099	.143	-.582
160	106	-.324	.147	.183	-.918
160	107	-.366	.150	.113	-1.011
160	108	-.212	.111	.152	-.676
160	109	-.199	.097	.159	-.538
160	110	-.212	.105	.152	-.621
160	111	-.223	.111	.129	-.641
160	112	-.215	.108	.137	-.566
160	113	-.179	.099	.159	-.542
160	114	-.207	.106	.106	-.571
160	115	-.228	.105	.129	-.563
160	116	-.159	.082	.118	-.479
160	117	-.193	.095	.144	-.543
160	118	-.204	.096	.133	-.546

APPENDIX A -- PRESSURE DATA: BASS BROTHERS BUILDING - PHASE II, DALLAS

WD	TAP	CPMEAN	CPRMS	CPMAX	CPMIN
160	119	-.195	.101	.228	-.562
160	120	-.224	.103	.202	-.622
160	121	-.206	.104	.223	-.585
160	122	-.179	.098	.179	-.510
160	123	-.203	.104	.155	-.608
160	124	-.234	.102	.129	-.562
160	125	-.225	.099	.069	-.559
160	126	-.154	.079	.110	-.418
160	127	-.193	.096	.148	-.514
160	128	-.217	.102	.122	-.556
160	129	-.220	.103	.138	-.562
160	130	-.169	.101	.145	-.573
160	131	-.232	.109	.171	-.644
160	132	-.252	.104	.068	-.589
160	133	-.195	.097	.137	-.492
160	134	-.219	.102	.124	-.580
160	135	-.166	.093	.101	-.559
160	136	-.199	.103	.109	-.603
160	137	-.227	.107	.116	-.662
160	138	-.219	.105	.166	-.643
160	139	-.205	.108	.128	-.667
160	140	-.251	.113	.156	-.741
160	141	-.275	.104	.095	-.725
160	142	-.247	.099	.080	-.624
160	143	-.238	.106	.159	-.629
160	144	-.204	.101	.102	-.605
160	145	-.239	.109	.121	-.648
160	146	-.259	.111	.115	-.683
160	147	-.248	.108	.116	-.690
160	148	-.184	.102	.147	-.604
160	149	-.267	.119	.086	-.691
160	150	-.282	.111	.078	-.732
160	151	-.210	.088	.071	-.539
160	152	-.271	.116	.116	-.657
160	153	-.276	.122	.131	-.807
160	154	-.306	.122	.089	-.916
160	155	-.285	.120	.091	-.819
160	156	-.237	.115	.108	-.694
160	157	-.266	.129	.161	-.795
160	158	-.239	.116	.137	-.660
160	159	-.217	.115	.216	-.674
160	160	-.239	.119	.167	-.697
160	161	-.293	.130	.171	-.750
160	162	-.325	.135	.148	-.893
160	163	-.295	.128	.145	-.968
160	164	-.235	.122	.135	-.830
160	165	-.182	.126	.282	-.715
160	166	-.141	.125	.246	-.612
160	167	-.183	.124	.264	-.709
160	168	-.082	.103	.293	-.559

WD	TAP	CPMEAN	CPRMS	CPMAX	CPMIN
160	169	-.271	.134	.136	-.891
160	170	-.329	.154	.127	-1.287
160	171	-.320	.146	.123	-1.116
160	172	-.261	.118	.062	-.959
160	173	-.294	.144	.091	-1.160
160	174	-.200	.116	.240	-.682
160	176	-.223	.102	.091	-.628
160	177	-.113	.121	.327	-.571
160	178	-.238	.155	.309	-.979
160	179	-.225	.116	.132	-.658
160	180	-.212	.126	.114	-.984
160	181	-.295	.137	.059	-1.127
160	182	-.176	.131	.236	-.812
160	183	-.156	.110	.218	-.530
160	184	-.170	.099	.126	-.607
160	185	-.217	.113	.141	-.689
160	186	-.096	.124	.315	-.649
160	187	-.121	.126	.249	-.753
160	188	-.024	.084	.273	-.323
160	189	-.173	.123	.176	-.847
160	190	-.224	.117	.109	-.644
160	191	-.098	.116	.278	-.633
160	192	-.040	.095	.273	-.478
160	193	-.061	.108	.255	-.516
160	194	-.070	.113	.255	-.519
160	195	-.098	.114	.238	-.563
160	196	-.125	.086	.123	-.430
160	197	-.196	.108	.149	-.602
160	198	-.205	.111	.153	-.729
160	201	-.364	.148	.247	-.863
160	202	-.387	.161	.172	-.968
160	203	-.260	.116	.166	-.701
160	204	-.227	.117	.158	-1.174
160	205	-.256	.131	.233	-1.064
160	206	-.263	.119	.187	-.768
160	207	-.246	.119	.137	-.791
160	208	-.181	.104	.144	-.651
160	209	-.215	.110	.149	-.702
160	210	-.254	.111	.111	-.721
160	211	-.251	.114	.185	-.738
160	212	-.243	.109	.106	-.736
160	213	-.282	.124	.086	-.876
160	214	-.321	.131	.054	-.995
160	215	-.279	.125	.118	-.790
160	216	-.186	.095	.165	-.516
160	217	-.248	.111	.172	-.647
160	218	-.196	.119	.218	-.904
160	219	-.258	.111	.068	-.678
160	220	-.248	.111	.109	-.742
160	221	-.275	.112	.085	-.765

WD	TAP	CPMEAN	CPRMS	CPMAX	CPMIN
160	222	-.305	.129	.098	-1.019
160	223	-.311	.136	.099	-1.267
160	224	-.270	.110	.105	-.675
160	225	-.221	.095	.104	-.549
160	226	-.243	.105	.116	-.607
160	227	-.282	.107	.095	-.653
160	228	-.286	.109	.071	-.651
160	229	-.268	.107	.102	-.680
160	230	-.256	.112	.101	-.757
160	231	-.302	.122	.076	-.966
160	232	-.300	.120	.047	-.894
160	233	-.243	.104	.117	-.662
160	234	-.262	.114	.137	-.682
160	235	-.299	.117	.092	-.709
160	236	-.292	.115	.091	-.708
160	237	-.281	.104	.149	-.714
160	238	-.338	.125	.177	-.764
160	239	-.261	.100	.137	-.764
160	240	-.346	.126	.033	-.851
160	241	-.296	.120	.109	-.966
160	242	-.321	.129	.094	-.979
160	243	-.367	.139	.187	-.918
160	244	-.369	.150	.238	-1.117
160	245	-.292	.127	.225	-.969
160	247	-.322	.132	.124	-.764
160	248	-.341	.136	.078	-.906
160	249	-.309	.115	.051	-.829
160	250	-.333	.129	.059	-1.015
160	251	-.346	.137	.106	-1.216
160	252	-.401	.144	.030	-1.124
160	253	-.361	.132	.093	-.927
160	254	-.520	.196	.151	-1.415
160	255	-.371	.147	.253	-.898
160	256	-.350	.144	.236	-.871
160	257	-.298	.139	.123	-.871
160	258	-.390	.149	.046	-1.291
160	259	-.316	.126	.061	-.871
160	260	-.360	.154	.091	-1.122
160	261	-.365	.147	.088	-.956
160	262	-.346	.149	.287	-1.018
160	263	-.236	.116	.295	-.976
160	264	-.191	.142	.253	-.834
160	265	-.217	.166	.271	-1.086
160	266	-.397	.157	.061	-1.096
160	267	-.351	.124	.029	-.961
160	268	-.371	.143	.046	-1.079
160	269	-.336	.161	.208	-1.090
160	270	-.106	.146	.416	-.827
160	271	-.316	.129	.138	-.915
160	272	-.191	.135	.213	-.749

APPENDIX A -- PRESSURE DATA: BASS BROTHERS BUILDING - PHASE II, DALLAS

WD	TAP	CPMEAN	CPRMS	CPMAX	CPMIN
160	273	-.446	.206	.142	-1.857
160	274	-.370	.177	.156	-1.412
160	275	-.099	.116	.314	-.735
160	276	-.109	.127	.314	-.678
160	277	-.138	.122	.283	-.709
160	278	-.237	.132	.281	-.754
160	279	-.297	.125	.066	-.964
160	280	-.215	.172	.476	-1.081
160	281	-.115	.149	.342	-.929
160	301	.259	.149	.735	-.260
160	302	.181	.150	.752	-.346
160	303	.220	.240	1.007	-.627
160	304	.133	.166	.739	-.423
160	305	.251	.209	.918	-.443
160	306	.186	.130	.671	-.225
160	307	.282	.121	.682	-.065
160	308	.361	.162	.914	-.142
160	309	.235	.143	.772	-.220
160	310	.322	.153	.874	-.214
160	311	.396	.140	.865	-.076
160	312	.339	.146	.854	-.196
160	313	.525	.172	1.094	.003
160	314	.528	.170	1.095	.009
160	315	.490	.148	.969	-.041
160	316	.298	.164	1.016	-.222
160	317	.449	.175	1.029	-.061
160	318	.472	.167	1.102	-.047
160	319	.493	.152	.932	.064
160	320	.483	.162	.973	.008
160	321	.451	.166	1.094	-.095
160	322	.271	.144	.860	-.178
160	323	.168	.130	.682	-.248
160	324	.204	.147	.728	-.555
160	325	.395	.157	.911	-.107
160	326	.386	.157	.893	-.105
160	327	.409	.154	.962	-.062
160	328	.376	.124	.810	-.011
160	329	.348	.135	.832	-.139
160	330	.214	.146	.652	-.337
160	331	.075	.122	.538	-.433
160	332	.051	.142	.587	-.475
160	333	.276	.134	.750	-.196
160	334	.280	.137	.758	-.149
160	335	.322	.135	.807	-.137
160	336	.306	.115	.701	-.084
160	337	.214	.116	.610	-.215
160	338	.147	.113	.573	-.194
160	339	-.006	.111	.526	-.413
160	340	-.309	.192	.573	-1.151
160	341	-.012	.133	.539	-.620

WD	TAP	CPMEAN	CPRMS	CPMAX	CPMIN
160	342	.081	.115	.537	-.286
160	343	.217	.112	.648	-.156
160	344	.173	.133	.661	-.185
160	345	.228	.121	.662	-.100
160	346	.135	.111	.556	-.182
160	347	.091	.105	.610	-.268
160	348	-.156	.125	.518	-.679
160	349	-.061	.130	.356	-.694
160	350	.007	.122	.488	-.481
160	351	.307	.133	.835	-.056
160	352	-.034	.153	.512	-.630
160	353	.016	.143	.492	-.885
160	354	-.163	.117	.190	-.785
160	355	.053	.140	.500	-.702
160	356	.011	.169	.578	-.848
160	357	.125	.162	.681	-.681
160	358	.067	.144	.478	-.672
160	359	.106	.144	.561	-.618
160	360	.039	.146	.511	-.535
160	361	-.124	.176	.451	-1.080
160	362	.072	.086	.345	-.242
160	363	.207	.135	.965	-.318
160	364	.182	.157	1.026	-.311
160	365	.254	.144	.858	-.227
160	366	.043	.146	.512	-.604
160	401	-.257	.119	.147	-.749
160	402	-.198	.148	.380	-.698
160	403	-.163	.127	.267	-.630
160	404	-.094	.137	.368	-.808
160	405	-.267	.179	.357	-1.028
160	406	-.124	.254	.650	-1.034
160	407	-.387	.274	.367	-1.329
160	408	-.253	.159	.274	-.877
160	409	.134	.160	.776	-.528
160	410	.197	.225	.887	-.601
160	411	.031	.213	.730	-.833
160	412	-.102	.218	.483	-1.045
160	413	-.337	.203	.232	-1.151
160	414	-.192	.125	.196	-.719
160	415	.028	.178	.719	-.710
160	416	.047	.234	.743	-.795
160	417	.002	.210	.667	-.635
160	418	-.103	.206	.425	-.877
160	419	-.181	.215	.456	-1.062
160	420	-.289	.165	.211	-1.255
160	421	-.261	.154	.218	-1.237
160	422	-.231	.137	.259	-.772
160	423	-.056	.169	.572	-1.047
160	424	-.068	.191	.608	-.962
160	425	.045	.182	.582	-.579

WD	TAP	CPMEAN	CPRMS	CPMAX	CPMIN
160	426	-.137	.207	.411	-.915
160	427	-.208	.203	.416	-.962
160	428	-.238	.143	.270	-.940
160	429	-.215	.153	.310	-.986
160	430	-.301	.176	.309	-.968
160	431	-.047	.146	.541	-.843
160	432	.024	.136	.526	-.493
160	433	.018	.163	.490	-.624
160	434	-.107	.162	.423	-.896
160	435	-.165	.173	.258	-1.113
160	436	-.198	.147	.168	-.962
160	437	-.187	.165	.215	-1.130
160	438	-.203	.147	.231	-.962
160	439	-.201	.154	.350	-.808
160	440	-.093	.146	.543	-.634
160	441	-.225	.113	.154	-.662
160	442	-.092	.117	.274	-.602
160	443	-.254	.121	.110	-.738
160	444	-.175	.118	.156	-.640
160	445	-.269	.127	.112	-.771
160	446	-.179	.139	.220	-.810
160	447	-.342	.168	.200	-1.118
160	448	-.236	.145	.184	-.825
160	449	-.271	.109	.095	-.846
160	450	-.100	.110	.306	-.641
160	451	-.231	.130	.236	-.725
160	452	-.100	.120	.244	-.556
160	453	-.178	.146	.265	-.928
160	454	-.067	.114	.328	-.630
160	455	-.247	.136	.124	-1.018
160	456	-.199	.154	.226	-1.012
160	457	-.154	.123	.198	-.830
160	458	-.014	.121	.341	-.597
160	459	-.218	.114	.157	-.824
160	460	-.151	.103	.179	-.565
160	461	-.319	.135	.029	-.787
160	801	-.210	.120	.128	-.781
160	802	-.432	.153	.025	-1.201
160	803	-.304	.133	.061	-.817
160	804	.019	.117	.484	-.364
160	805	.144	.105	.523	-.167
160	806	.069	.126	.509	-.269
160	807	-.188	.105	.120	-.502
160	808	-.178	.115	.263	-.994
160	809	-.071	.120	.385	-.581
160	810	-.287	.153	.262	-.914
160	901	.265	.147	.894	-.260
160	902	.329	.130	1.054	-.163
160	903	-.317	.198	.306	-1.032
160	904	-.378	.143	.095	-.854

APPENDIX A -- PRESSURE DATA: BASS BROTHERS BUILDING - PHASE II, DALLAS

WD	TAP	CPMEAN	CPRMS	CPMAX	CPMIN
160	905	-.370	.122	-.011	-.874
160	906	-.319	.133	.111	-.790
160	907	-.357	.141	.179	-.941
160	908	-.251	.113	.127	-.657
160	909	-.148	.114	.269	-.503
160	910	-.173	.118	.261	-.689
160	911	-.238	.150	.222	-1.299
160	912	-.254	.139	.285	-.895
160	913	-.166	.103	.180	-.574
170	101	-.194	.103	.116	-.546
170	102	-.185	.116	.178	-.771
170	103	-.218	.115	.139	-.737
170	104	-.205	.112	.144	-.670
170	105	-.161	.106	.205	-.563
170	106	-.200	.131	.255	-.998
170	107	-.267	.133	.159	-1.004
170	108	-.191	.103	.172	-.540
170	109	-.173	.097	.119	-.696
170	110	-.186	.103	.137	-.715
170	111	-.214	.107	.142	-.589
170	112	-.195	.103	.138	-.578
170	113	-.166	.103	.171	-.624
170	114	-.203	.111	.147	-.720
170	115	-.237	.111	.118	-.839
170	116	-.138	.080	.144	-.519
170	117	-.160	.091	.154	-.535
170	118	-.179	.093	.145	-.548
170	119	-.181	.104	.178	-.550
170	120	-.222	.107	.120	-.630
170	121	-.196	.102	.131	-.534
170	122	-.178	.102	.120	-.619
170	123	-.180	.101	.168	-.550
170	124	-.232	.106	.079	-.702
170	125	-.222	.103	.071	-.667
170	126	-.135	.080	.115	-.426
170	127	-.189	.102	.143	-.584
170	128	-.224	.106	.108	-.630
170	129	-.222	.107	.083	-.610
170	130	-.139	.096	.153	-.473
170	131	-.188	.104	.118	-.632
170	132	-.229	.101	.049	-.596
170	133	-.182	.098	.158	-.511
170	134	-.195	.098	.087	-.512
170	135	-.167	.095	.183	-.502
170	136	-.197	.105	.172	-.557
170	137	-.232	.109	.168	-.642
170	138	-.217	.106	.156	-.605
170	139	-.194	.106	.127	-.664
170	140	-.228	.111	.164	-.855
170	141	-.274	.107	.070	-.660

WD	TAP	CPMEAN	CPRMS	CPMAX	CPMIN
170	142	-.248	.104	.118	-.647
170	143	-.220	.106	.103	-.613
170	144	-.195	.100	.171	-.531
170	145	-.233	.107	.096	-.597
170	146	-.262	.109	.090	-.636
170	147	-.246	.109	.138	-.667
170	148	-.177	.112	.175	-.875
170	149	-.214	.122	.174	-.739
170	150	-.227	.113	.146	-.627
170	151	-.168	.082	.087	-.485
170	152	-.220	.105	.116	-.563
170	153	-.265	.125	.069	-.753
170	154	-.305	.126	.037	-.792
170	155	-.281	.122	.058	-.747
170	156	-.166	.113	.180	-.693
170	157	-.180	.121	.230	-.609
170	158	-.190	.109	.170	-.829
170	159	-.181	.108	.176	-.789
170	160	-.202	.108	.139	-.647
170	161	-.282	.123	.086	-.861
170	162	-.333	.135	.054	-.955
170	163	-.289	.125	.070	-1.004
170	164	-.221	.127	.192	-1.066
170	165	-.105	.108	.272	-.553
170	166	-.073	.104	.278	-.430
170	167	-.110	.110	.300	-.508
170	168	-.041	.093	.363	-.377
170	169	-.223	.132	.160	-.830
170	170	-.325	.165	.080	-1.266
170	171	-.326	.161	.119	-1.375
170	172	-.237	.113	.105	-.743
170	173	-.265	.136	.140	-.886
170	174	-.160	.107	.158	-.592
170	176	-.196	.098	.075	-.657
170	177	-.074	.104	.291	-.481
170	178	-.164	.128	.200	-1.177
170	179	-.175	.103	.133	-.551
170	180	-.239	.120	.096	-.831
170	181	-.251	.137	.132	-.875
170	182	-.135	.121	.253	-.835
170	183	-.113	.102	.232	-.516
170	184	-.096	.085	.252	-.427
170	185	-.153	.099	.256	-.511
170	186	-.073	.102	.320	-.498
170	187	-.090	.104	.299	-.524
170	188	-.021	.083	.260	-.357
170	189	-.098	.109	.296	-.513
170	190	-.141	.113	.205	-.496
170	191	-.076	.104	.270	-.490
170	192	-.024	.079	.256	-.350

WD	TAP	CPMEAN	CPRMS	CPMAX	CPMIN
170	193	-.041	.093	.290	-.397
170	194	-.058	.096	.269	-.429
170	195	-.069	.098	.256	-.437
170	196	-.066	.080	.190	-.378
170	197	-.108	.102	.203	-.489
170	198	-.154	.100	.168	-.556
170	201	-.214	.153	.311	-.861
170	202	-.278	.135	.218	-.814
170	203	-.215	.114	.154	-.734
170	204	-.167	.111	.166	-.704
170	205	-.196	.124	.155	-.854
170	206	-.226	.121	.145	-.821
170	207	-.209	.119	.132	-.798
170	208	-.135	.101	.221	-.522
170	209	-.170	.106	.188	-.542
170	210	-.215	.107	.147	-.580
170	211	-.200	.107	.142	-.638
170	212	-.181	.101	.150	-.654
170	213	-.219	.113	.196	-.748
170	214	-.263	.116	.199	-.878
170	215	-.209	.114	.200	-.759
170	216	-.134	.081	.157	-.440
170	217	-.187	.093	.124	-.535
170	218	-.131	.097	.211	-.470
170	219	-.211	.092	.095	-.556
170	220	-.202	.098	.108	-.684
170	221	-.203	.094	.058	-.618
170	222	-.231	.107	.078	-.720
170	223	-.235	.111	.119	-.749
170	224	-.217	.099	.083	-.567
170	225	-.162	.085	.133	-.435
170	226	-.181	.093	.146	-.484
170	227	-.219	.095	.124	-.533
170	228	-.222	.095	.116	-.535
170	229	-.215	.102	.169	-.692
170	230	-.218	.106	.167	-.826
170	231	-.254	.109	.143	-.668
170	232	-.250	.103	.109	-.626
170	233	-.200	.098	.107	-.577
170	234	-.215	.107	.136	-.628
170	235	-.254	.110	.107	-.669
170	236	-.245	.108	.122	-.657
170	237	-.212	.098	.148	-.578
170	238	-.266	.113	.212	-.776
170	239	-.230	.084	.032	-.535
170	240	-.277	.118	.192	-.959
170	241	-.230	.110	.149	-.704
170	242	-.249	.118	.101	-.768
170	243	-.298	.130	.184	-.795
170	244	-.299	.136	.141	-.797

APPENDIX A -- PRESSURE DATA: BASS BROTHERS BUILDING - PHASE II, DALLAS

WD	TAP	CPMEAN	CPRMS	CPMAX	CPMIN
170	245	-.232	.114	.125	-.657
170	247	-.288	.112	.080	-.685
170	248	-.278	.119	.130	-.755
170	249	-.262	.107	.058	-.670
170	250	-.283	.118	.036	-.709
170	251	-.302	.112	.029	-.862
170	252	-.349	.134	-.005	-.951
170	253	-.292	.124	.099	-.694
170	254	-.446	.174	.104	-1.170
170	255	-.310	.139	.139	-.963
170	256	-.295	.138	.165	-.911
170	257	-.232	.139	.192	-.897
170	258	-.348	.130	.016	-1.141
170	259	-.267	.110	.037	-.739
170	260	-.299	.132	.064	-.914
170	261	-.308	.127	.046	-.816
170	262	-.285	.132	.204	-1.010
170	263	-.145	.100	.231	-.684
170	264	-.099	.112	.280	-.611
170	265	-.123	.126	.281	-.725
170	266	-.334	.133	.040	-1.146
170	267	-.280	.110	.018	-.672
170	268	-.293	.124	.052	-.746
170	269	-.254	.148	.181	-.870
170	270	-.059	.114	.319	-.569
170	271	-.240	.110	.095	-.778
170	272	-.129	.116	.226	-.625
170	273	-.361	.175	.037	-1.367
170	274	-.275	.144	.150	-1.451
170	275	-.063	.090	.229	-.701
170	276	-.076	.099	.255	-.566
170	277	-.107	.103	.242	-.693
170	278	-.195	.110	.206	-.661
170	279	-.231	.122	.106	-.681
170	280	-.124	.137	.484	-.650
170	281	-.076	.107	.339	-.556
170	301	.260	.185	.887	-.314
170	302	.134	.165	.698	-.396
170	303	.283	.233	1.140	-.438
170	304	.219	.170	.796	-.352
170	305	.205	.198	.910	-.394
170	306	.197	.150	.692	-.254
170	307	.287	.148	.824	-.141
170	308	.282	.201	.905	-.351
170	309	.208	.170	.909	-.419
170	310	.331	.196	.985	-.200
170	311	.274	.135	.739	-.132
170	312	.274	.143	.795	-.131
170	313	.351	.170	.923	-.107
170	314	.352	.168	.961	-.055
170	315	.361	.169	.866	-.219
170	316	.212	.145	.818	-.251
170	317	.266	.175	.884	-.236
170	318	.292	.171	.892	-.207
170	319	.321	.153	.879	-.093
170	320	.318	.167	.943	-.096
170	321	.315	.164	.888	-.098
170	322	.152	.142	.648	-.291
170	323	.079	.122	.516	-.370
170	324	.104	.115	.492	-.405
170	325	.187	.149	.781	-.255
170	326	.169	.154	.799	-.274
170	327	.195	.153	.790	-.240
170	328	.200	.119	.642	-.139
170	329	.197	.132	.763	-.193
170	330	.096	.152	.615	-.385
170	331	.024	.110	.448	-.391
170	332	.009	.102	.352	-.358
170	333	.162	.107	.590	-.218
170	334	.152	.113	.595	-.211
170	335	.190	.114	.626	-.157
170	336	.191	.109	.630	-.210
170	337	.138	.125	.681	-.223
170	338	.084	.116	.481	-.269
170	339	-.020	.107	.454	-.369
170	340	-.146	.134	.296	-.850
170	341	-.012	.097	.333	-.511
170	342	-.014	.104	.366	-.320
170	343	.134	.107	.642	-.183
170	344	.080	.133	.616	-.330
170	345	.137	.124	.663	-.228
170	346	.032	.115	.431	-.315
170	347	.056	.107	.452	-.285
170	348	-.145	.121	.328	-.555
170	349	-.013	.105	.343	-.470
170	350	-.007	.104	.329	-.447
170	351	.204	.140	1.038	-.176
170	352	-.052	.139	.424	-.914
170	353	.007	.129	.524	-.479
170	354	-.178	.113	.231	-.602
170	355	.018	.113	.475	-.533
170	356	-.051	.130	.320	-.620
170	357	.033	.128	.471	-.577
170	358	-.041	.133	.477	-.578
170	359	.043	.133	.520	-.424
170	360	-.019	.134	.567	-.473
170	361	-.128	.157	.317	-.963
170	362	.059	.077	.296	-.234
170	363	.154	.114	.709	-.295
170	364	.101	.134	.637	-.297
170	365	.158	.124	.619	-.219
170	366	-.035	.126	.458	-.519
170	401	-.232	.111	.116	-.634
170	402	-.125	.129	.303	-.564
170	403	-.164	.113	.188	-.809
170	404	.003	.098	.349	-.486
170	405	-.072	.168	.502	-1.009
170	406	.148	.221	.779	-.879
170	407	-.053	.279	.689	-1.365
170	408	-.235	.141	.168	-.803
170	409	.112	.115	.545	-.349
170	410	.214	.155	.824	-.533
170	411	.164	.160	.778	-.547
170	412	.095	.137	.667	-.696
170	413	-.108	.162	.421	-1.299
170	414	-.214	.115	.161	-.738
170	415	.032	.108	.423	-.490
170	416	.110	.139	.554	-.502
170	417	.132	.140	.580	-.362
170	418	.094	.122	.436	-.522
170	419	.047	.166	.419	-.799
170	420	-.093	.207	.458	-1.220
170	421	-.102	.193	.494	-.976
170	422	-.223	.129	.204	-.756
170	423	-.055	.116	.402	-.581
170	424	-.056	.120	.478	-.530
170	425	.098	.116	.612	-.253
170	426	.010	.123	.427	-.464
170	427	-.021	.137	.402	-.643
170	428	-.066	.141	.319	-.658
170	429	-.062	.150	.402	-.788
170	430	-.265	.150	.183	-1.134
170	431	-.052	.101	.362	-.579
170	432	.044	.091	.465	-.288
170	433	.078	.104	.480	-.492
170	434	-.009	.105	.344	-.497
170	435	-.018	.121	.415	-.668
170	436	-.046	.105	.307	-.709
170	437	-.046	.121	.379	-.877
170	438	-.177	.139	.294	-1.002
170	439	-.183	.121	.264	-.646
170	440	-.088	.108	.367	-.449
170	441	-.179	.099	.191	-.535
170	442	-.021	.095	.293	-.411
170	443	-.133	.101	.226	-.469
170	444	-.071	.096	.248	-.415
170	445	-.189	.098	.094	-.592
170	446	-.063	.105	.251	-.582
170	447	-.176	.133	.233	-1.091
170	448	-.102	.118	.261	-.736

APPENDIX A -- PRESSURE DATA: BASS BROTHERS BUILDING - PHASE II, DALLAS

WD	TAP	CPMEAN	CPRMS	CPMAX	CPMIN
170	449	-.233	.101	.118	-.555
170	450	-.053	.096	.270	-.418
170	451	-.109	.107	.292	-.563
170	452	-.057	.100	.262	-.500
170	453	-.072	.109	.244	-.786
170	454	-.008	.109	.363	-.484
170	455	-.127	.130	.307	-.871
170	456	-.070	.117	.311	-.724
170	457	-.110	.106	.271	-.562
170	458	.025	.102	.461	-.352
170	459	-.138	.104	.213	-.546
170	460	-.083	.097	.224	-.417
170	461	-.201	.131	.164	-.796
170	801	-.176	.117	.186	-.734
170	802	-.360	.153	.116	-1.008
170	803	-.245	.126	.148	-.750
170	804	-.013	.099	.378	-.353
170	805	.106	.091	.472	-.205
170	806	.036	.109	.501	-.330
170	807	-.134	.101	.178	-.516
170	808	-.167	.092	.157	-.490
170	809	-.041	.093	.336	-.348
170	810	-.223	.132	.452	-.657
170	901	.146	.126	.726	-.220
170	902	.226	.135	.854	-.213
170	903	-.211	.183	.416	-1.057
170	904	-.233	.144	.268	-.797
170	905	-.295	.130	.082	-.860
170	906	-.310	.151	.152	-.905
170	907	-.283	.140	.176	-.873
170	908	-.216	.115	.181	-.628
170	909	-.007	.110	.442	-.445
170	910	-.120	.111	.240	-.626
170	911	-.153	.112	.193	-.686
170	912	-.238	.127	.122	-.704
170	913	-.130	.093	.289	-.445
180	101	-.201	.110	.179	-.691
180	102	-.173	.123	.255	-.726
180	103	-.220	.123	.210	-.732
180	104	-.206	.119	.226	-.668
180	105	-.182	.122	.190	-.878
180	106	-.123	.117	.273	-.607
180	107	-.199	.121	.235	-.655
180	108	-.197	.102	.167	-.597
180	109	-.195	.113	.141	-.651
180	110	-.203	.115	.153	-.646
180	111	-.238	.116	.131	-.704
180	112	-.209	.111	.131	-.645
180	113	-.144	.109	.156	-.606
180	114	-.188	.118	.136	-.690
180	115	-.238	.119	.101	-.773
180	116	-.151	.086	.097	-.497
180	117	-.165	.095	.091	-.568
180	118	-.188	.099	.071	-.599
180	119	-.194	.106	.138	-.600
180	120	-.249	.109	.076	-.639
180	121	-.207	.103	.116	-.573
180	122	-.187	.111	.233	-.640
180	123	-.196	.106	.110	-.617
180	124	-.251	.123	.216	-.730
180	125	-.227	.117	.216	-.660
180	126	-.141	.086	.147	-.431
180	127	-.186	.105	.150	-.608
180	128	-.232	.112	.112	-.652
180	129	-.226	.115	.129	-.684
180	130	-.166	.105	.189	-.588
180	131	-.208	.120	.179	-.736
180	132	-.259	.114	.125	-.665
180	133	-.187	.105	.136	-.606
180	134	-.217	.107	.159	-.607
180	135	-.190	.103	.136	-.546
180	136	-.221	.111	.119	-.614
180	137	-.268	.118	.093	-.712
180	138	-.245	.113	.114	-.772
180	139	-.203	.114	.121	-.745
180	140	-.200	.115	.224	-.697
180	141	-.241	.124	.254	-.677
180	142	-.229	.124	.167	-.704
180	143	-.219	.117	.132	-.635
180	144	-.206	.115	.176	-.643
180	145	-.257	.135	.197	-.999
180	146	-.303	.139	.132	-1.124
180	147	-.278	.132	.140	-.957
180	148	-.223	.120	.112	-.834
180	149	-.202	.122	.121	-.698
180	150	-.197	.115	.174	-.624
180	151	-.133	.095	.153	-.512
180	152	-.193	.117	.319	-.708
180	153	-.290	.149	.111	-.968
180	154	-.352	.155	.056	-1.116
180	155	-.321	.149	.084	-1.049
180	156	-.147	.110	.193	-.680
180	157	-.106	.111	.299	-.589
180	158	-.119	.113	.376	-.600
180	159	-.119	.110	.390	-.647
180	160	-.135	.117	.206	-.634
180	161	-.258	.149	.175	-.850
180	162	-.417	.194	.042	-1.478
180	163	-.365	.175	.050	-1.204
180	164	-.307	.152	.070	-1.154
180	165	-.089	.102	.278	-.582
180	166	-.068	.097	.274	-.367
180	167	-.079	.101	.270	-.398
180	168	-.054	.083	.242	-.428
180	169	-.136	.114	.209	-.661
180	170	-.203	.140	.178	-.919
180	171	-.250	.147	.160	-1.151
180	172	-.263	.129	.090	-.928
180	173	-.342	.173	.215	-1.197
180	174	-.095	.100	.289	-.450
180	176	-.150	.099	.170	-.723
180	177	-.064	.093	.252	-.404
180	178	-.103	.102	.288	-.587
180	179	-.121	.098	.181	-.645
180	180	-.142	.106	.177	-.637
180	181	-.156	.141	.232	-.923
180	182	-.094	.099	.210	-.581
180	183	-.071	.092	.263	-.431
180	184	-.018	.076	.250	-.283
180	185	-.067	.099	.255	-.376
180	186	-.070	.096	.330	-.357
180	187	-.078	.097	.311	-.397
180	188	-.008	.081	.278	-.295
180	189	-.022	.102	.409	-.367
180	190	-.032	.107	.411	-.591
180	191	-.076	.095	.224	-.500
180	192	-.022	.080	.277	-.324
180	193	-.042	.094	.303	-.333
180	194	-.066	.098	.293	-.382
180	195	-.047	.094	.344	-.362
180	196	.002	.070	.254	-.217
180	197	-.016	.084	.304	-.281
180	198	-.056	.114	.344	-.560
180	201	-.112	.122	.321	-.639
180	202	-.193	.118	.239	-.807
180	203	-.196	.121	.224	-.717
180	204	-.143	.105	.204	-.659
180	205	-.164	.118	.209	-.675
180	206	-.210	.124	.188	-.868
180	207	-.192	.122	.179	-1.131
180	208	-.108	.097	.204	-.509
180	209	-.135	.102	.184	-.526
180	210	-.188	.104	.139	-.561
180	211	-.161	.105	.163	-.569
180	212	-.136	.098	.199	-.495
180	213	-.168	.108	.205	-.561
180	214	-.220	.112	.151	-.619
180	215	-.163	.111	.200	-.639
180	216	-.107	.084	.166	-.373
180	217	-.153	.095	.139	-.470

APPENDIX A -- PRESSURE DATA:

BASS BROTHERS BUILDING - PHASE II, DALLAS

WD	TAP	CPMEAN	CPRMS	CPMAX	CPMIN
180	218	-.094	.097	.217	-.506
180	219	-.184	.096	.118	-.504
180	220	-.182	.090	.089	-.505
180	221	-.154	.093	.149	-.616
180	222	-.175	.104	.165	-.673
180	223	-.191	.095	.110	-.560
180	224	-.175	.101	.154	-.644
180	225	-.131	.084	.161	-.404
180	226	-.145	.091	.172	-.417
180	227	-.182	.092	.134	-.475
180	228	-.184	.094	.137	-.521
180	229	-.154	.090	.142	-.536
180	230	-.175	.097	.140	-.517
180	231	-.208	.100	.110	-.577
180	232	-.203	.094	.080	-.574
180	233	-.147	.101	.187	-.599
180	234	-.161	.110	.213	-.602
180	235	-.196	.113	.201	-.612
180	236	-.186	.109	.204	-.584
180	237	-.171	.095	.178	-.534
180	238	-.217	.111	.116	-.631
180	239	-.179	.082	.072	-.484
180	240	-.245	.111	.135	-.753
180	241	-.189	.099	.178	-.540
180	242	-.191	.106	.270	-.602
180	243	-.245	.123	.322	-.821
180	244	-.239	.126	.274	-.840
180	245	-.168	.118	.166	-.759
180	247	-.197	.107	.133	-.601
180	248	-.202	.115	.137	-.714
180	249	-.176	.100	.145	-.551
180	250	-.193	.111	.153	-.600
180	251	-.248	.118	.089	-.727
180	252	-.220	.114	.122	-.703
180	253	-.176	.104	.162	-.589
180	254	-.320	.152	.104	-.962
180	255	-.229	.129	.177	-.677
180	256	-.218	.130	.196	-.702
180	257	-.182	.125	.140	-.982
180	258	-.234	.114	.124	-.791
180	259	-.196	.107	.087	-.681
180	260	-.222	.129	.120	-.801
180	261	-.231	.124	.101	-.917
180	262	-.217	.120	.102	-.951
180	263	-.115	.086	.135	-.510
180	264	-.092	.097	.282	-.566
180	265	-.118	.112	.265	-.811
180	266	-.240	.125	.102	-1.034
180	267	-.206	.108	.101	-.762
180	268	-.212	.122	.157	-.799
180	269	-.218	.142	.183	-.857
180	270	-.076	.103	.279	-.466
180	271	-.208	.124	.069	-1.176
180	272	-.120	.108	.179	-.574
180	273	-.258	.157	.137	-1.112
180	274	-.225	.142	.166	-1.009
180	275	-.054	.092	.249	-.505
180	276	-.064	.101	.258	-.517
180	277	-.094	.102	.206	-.590
180	278	-.161	.108	.193	-.622
180	279	-.177	.113	.124	-.812
180	280	-.084	.117	.359	-.604
180	281	-.067	.099	.263	-.404
180	301	.259	.206	.930	-.283
180	302	.075	.168	.688	-.467
180	303	.261	.223	1.170	-.378
180	304	.261	.172	.893	-.208
180	305	.209	.161	.751	-.343
180	306	.232	.183	.879	-.285
180	307	.312	.168	.835	-.115
180	308	.056	.205	.903	-.518
180	309	.139	.200	.918	-.468
180	310	.336	.228	1.009	-.444
180	311	.161	.138	.659	-.335
180	312	.221	.159	.767	-.327
180	313	.270	.191	1.068	-.297
180	314	.256	.169	.932	-.218
180	315	.196	.142	.721	-.222
180	316	.162	.168	.752	-.642
180	317	.094	.142	.601	-.538
180	318	.125	.145	.644	-.545
180	319	.161	.130	.919	-.203
180	320	.162	.129	.869	-.284
180	321	.129	.120	.586	-.318
180	322	.019	.113	.524	-.360
180	323	-.022	.104	.442	-.374
180	324	.026	.108	.530	-.496
180	325	.035	.103	.472	-.526
180	326	.005	.108	.458	-.531
180	327	.039	.109	.508	-.496
180	328	.068	.091	.522	-.224
180	329	.065	.100	.583	-.239
180	330	-.026	.129	.430	-.413
180	331	-.043	.102	.316	-.423
180	332	-.055	.107	.345	-.414
180	333	.032	.090	.333	-.254
180	334	.008	.093	.315	-.299
180	335	.057	.093	.341	-.220
180	336	.038	.079	.332	-.186
180	337	-.020	.098	.314	-.354
180	338	-.022	.092	.415	-.326
180	339	-.079	.095	.238	-.451
180	340	-.035	.101	.323	-.382
180	341	-.061	.102	.282	-.403
180	342	-.020	.087	.324	-.303
180	343	-.022	.095	.337	-.339
180	344	-.013	.097	.365	-.310
180	345	-.010	.095	.394	-.306
180	346	.010	.084	.311	-.269
180	347	-.060	.091	.334	-.364
180	348	-.118	.096	.286	-.449
180	349	-.007	.090	.270	-.318
180	350	-.022	.090	.266	-.298
180	351	.040	.115	.591	-.323
180	352	-.049	.098	.358	-.410
180	353	-.068	.098	.291	-.415
180	354	-.101	.095	.226	-.444
180	355	-.016	.092	.277	-.321
180	356	-.031	.094	.296	-.387
180	357	-.041	.097	.267	-.396
180	358	-.036	.086	.244	-.362
180	359	-.073	.095	.242	-.408
180	360	-.050	.095	.256	-.421
180	361	-.136	.111	.241	-.653
180	362	.026	.084	.346	-.289
180	363	.005	.097	.348	-.343
180	364	-.013	.102	.522	-.355
180	365	-.011	.103	.418	-.363
180	366	-.041	.091	.284	-.317
180	401	-.232	.116	.105	-.828
180	402	-.089	.116	.413	-.542
180	403	-.143	.108	.162	-.663
180	404	.026	.089	.402	-.322
180	405	.059	.178	.818	-.447
180	406	.259	.175	.845	-.296
180	407	.180	.191	.870	-.650
180	408	-.189	.161	.305	-.885
180	409	.129	.121	.612	-.287
180	410	.223	.162	.839	-.239
180	411	.198	.166	.829	-.247
180	412	.156	.133	.737	-.267
180	413	.097	.137	.583	-.509
180	414	-.191	.133	.200	-.792
180	415	.044	.109	.488	-.271
180	416	.122	.128	.643	-.216
180	417	.157	.132	.697	-.197
180	418	.132	.097	.521	-.202
180	419	.130	.107	.608	-.258
180	420	.084	.139	.708	-.581
180	421	.074	.155	.715	-.610

APPENDIX A -- PRESSURE DATA: BASS BROTHERS BUILDING - PHASE II, DALLAS

WD	TAP	CPMEAN	CPRMS	CPMAX	CPMIN
180	422	-.222	.165	.270	-.948
180	423	-.023	.124	.488	-.421
180	424	.075	.096	.500	-.282
180	425	.131	.106	.570	-.185
180	426	.068	.102	.481	-.242
180	427	.067	.102	.479	-.309
180	428	.060	.098	.374	-.422
180	429	.063	.117	.416	-.620
180	430	-.210	.183	.376	-1.142
180	431	-.020	.110	.383	-.554
180	432	.067	.091	.591	-.223
180	433	.102	.101	.650	-.210
180	434	.046	.101	.516	-.284
180	435	.048	.107	.496	-.415
180	436	.047	.076	.308	-.220
180	437	.035	.090	.411	-.287
180	438	-.081	.141	.359	-.841
180	439	-.025	.112	.344	-.503
180	440	-.017	.102	.311	-.327
180	441	.009	.095	.346	-.330
180	442	.023	.100	.369	-.309
180	443	.022	.100	.383	-.330
180	444	.018	.096	.371	-.322
180	445	.028	.079	.319	-.257
180	446	.013	.088	.338	-.335
180	447	-.001	.092	.339	-.318
180	448	-.010	.090	.318	-.320
180	449	-.020	.093	.263	-.370
180	450	.000	.104	.362	-.426
180	451	.039	.091	.307	-.318
180	452	.035	.093	.405	-.286
180	453	.006	.092	.405	-.347
180	454	-.004	.092	.325	-.352
180	455	.038	.094	.335	-.275
180	456	.027	.092	.337	-.372
180	457	.012	.082	.258	-.322
180	458	.014	.088	.275	-.343
180	459	.008	.091	.290	-.328
180	460	.006	.090	.289	-.362
180	461	.025	.080	.302	-.277
180	801	-.072	.117	.316	-.485
180	802	-.153	.142	.242	-.762
180	803	-.088	.106	.216	-.478
180	804	.005	.089	.254	-.298
180	805	.016	.098	.292	-.310
180	806	.001	.103	.309	-.387
180	807	-.055	.102	.290	-.417
180	808	-.050	.089	.268	-.378
180	809	-.056	.098	.281	-.595
180	810	-.119	.109	.271	-.584

WD	TAP	CPMEAN	CPRMS	CPMAX	CPMIN
180	901	.016	.101	.355	-.343
180	902	.090	.104	.519	-.225
180	903	-.188	.166	.395	-.864
180	904	-.063	.146	.362	-1.162
180	905	-.207	.118	.163	-.691
180	906	-.384	.158	.148	-1.046
180	907	-.283	.171	.239	-1.498
180	908	-.177	.111	.195	-.570
180	909	.026	.104	.341	-.374
180	910	-.092	.121	.321	-.974
180	911	-.117	.104	.243	-.478
180	912	-.216	.131	.190	-.852
180	913	-.074	.096	.284	-.480
190	101	-.252	.112	.072	-.606
190	102	-.207	.126	.157	-.841
190	103	-.258	.126	.141	-.729
190	104	-.234	.120	.116	-.682
190	105	-.215	.116	.152	-.772
190	106	-.085	.121	.489	-.506
190	107	-.195	.124	.179	-.746
190	108	-.226	.104	.212	-.618
190	109	-.244	.112	.103	-.632
190	110	-.245	.116	.129	-.628
190	111	-.264	.117	.138	-.733
190	112	-.230	.113	.132	-.688
190	113	-.173	.116	.179	-.661
190	114	-.218	.122	.117	-.652
190	115	-.281	.125	.049	-.793
190	116	-.178	.085	.164	-.554
190	117	-.187	.095	.151	-.517
190	118	-.220	.098	.167	-.559
190	119	-.222	.111	.192	-.704
190	120	-.279	.114	.172	-.729
190	121	-.222	.108	.204	-.700
190	122	-.203	.099	.139	-.575
190	123	-.205	.103	.170	-.676
190	124	-.305	.126	.088	-.838
190	125	-.275	.116	.074	-.824
190	126	-.171	.080	.103	-.450
190	127	-.213	.101	.113	-.545
190	128	-.252	.107	.076	-.680
190	129	-.234	.108	.100	-.806
190	130	-.181	.107	.139	-.564
190	131	-.257	.132	.177	-1.088
190	132	-.314	.122	.037	-.766
190	133	-.209	.099	.161	-.592
190	134	-.255	.110	.078	-.690
190	135	-.199	.100	.123	-.582
190	136	-.225	.110	.127	-.624
190	137	-.279	.117	.105	-.766

WD	TAP	CPMEAN	CPRMS	CPMAX	CPMIN
190	138	-.250	.111	.101	-.758
190	139	-.215	.103	.209	-.616
190	140	-.273	.135	.125	-.896
190	141	-.335	.129	.025	-.867
190	142	-.291	.122	.080	-.777
190	143	-.263	.107	.062	-.656
190	144	-.247	.111	.093	-.757
190	145	-.277	.121	.127	-.728
190	146	-.332	.122	.077	-.809
190	147	-.301	.116	.081	-.755
190	148	-.224	.113	.137	-.878
190	149	-.251	.123	.192	-.738
190	150	-.310	.125	.199	-.801
190	151	-.237	.102	.109	-.655
190	152	-.307	.129	.179	-.850
190	153	-.316	.135	.076	-.944
190	154	-.381	.136	-.010	-.940
190	155	-.340	.130	.010	-.858
190	156	-.225	.112	.080	-.748
190	157	-.230	.141	.308	-.865
190	158	-.226	.133	.378	-.752
190	159	-.217	.128	.329	-.712
190	160	-.252	.126	.205	-.788
190	161	-.324	.143	.095	-1.028
190	162	-.394	.155	.090	-1.154
190	163	-.350	.141	.091	-1.176
190	164	-.288	.141	.090	-1.289
190	165	-.183	.129	.254	-.750
190	166	-.109	.119	.354	-.870
190	167	-.174	.138	.319	-.801
190	168	-.131	.093	.239	-.532
190	169	-.248	.130	.207	-.795
190	170	-.315	.146	.163	-1.019
190	171	-.342	.160	.146	-1.224
190	172	-.288	.131	.123	-1.048
190	173	-.321	.163	.193	-1.406
190	174	-.201	.125	.233	-.697
190	176	-.279	.115	.057	-.700
190	177	-.129	.109	.213	-.594
190	178	-.178	.134	.298	-.856
190	179	-.220	.120	.136	-.689
190	180	-.256	.131	.134	-.969
190	181	-.320	.175	.159	-1.271
190	182	-.175	.125	.188	-.881
190	183	-.125	.103	.304	-.478
190	184	-.057	.087	.227	-.409
190	185	-.154	.118	.224	-.677
190	186	-.156	.118	.260	-.553
190	187	-.163	.120	.243	-.643
190	188	-.050	.079	.227	-.381

APPENDIX A -- PRESSURE DATA: BASS BROTHERS BUILDING - PHASE II, DALLAS

WD	TAP	CPMEAN	CPRMS	CPMAX	CPMIN
190	189	-.040	.095	.309	-.432
190	190	-.023	.120	.484	-.590
190	191	-.142	.100	.190	-.502
190	192	-.079	.087	.236	-.451
190	193	-.104	.105	.274	-.506
190	194	-.130	.110	.265	-.558
190	195	-.081	.100	.252	-.371
190	196	-.020	.085	.249	-.307
190	197	-.039	.104	.297	-.385
190	198	-.161	.134	.256	-.693
190	201	-.144	.117	.268	-.614
190	202	-.217	.116	.152	-.666
190	203	-.202	.112	.158	-.615
190	204	-.142	.095	.188	-.572
190	205	-.161	.111	.240	-.634
190	206	-.220	.118	.263	-.683
190	207	-.196	.117	.297	-.833
190	208	-.137	.098	.199	-.527
190	209	-.159	.102	.179	-.525
190	210	-.221	.103	.109	-.583
190	211	-.188	.106	.167	-.675
190	212	-.154	.099	.128	-.486
190	213	-.181	.108	.129	-.540
190	214	-.238	.113	.090	-.646
190	215	-.172	.109	.140	-.561
190	216	-.126	.089	.158	-.405
190	217	-.169	.101	.133	-.485
190	218	-.119	.104	.219	-.450
190	219	-.207	.102	.120	-.548
190	220	-.201	.105	.189	-.607
190	221	-.176	.085	.089	-.516
190	222	-.195	.097	.133	-.614
190	223	-.203	.107	.138	-.579
190	224	-.197	.091	.145	-.564
190	225	-.149	.084	.112	-.440
190	226	-.161	.092	.121	-.483
190	227	-.203	.095	.093	-.555
190	228	-.195	.093	.088	-.560
190	229	-.173	.090	.103	-.513
190	230	-.187	.097	.135	-.480
190	231	-.217	.100	.094	-.533
190	232	-.208	.092	.070	-.534
190	233	-.176	.098	.204	-.529
190	234	-.185	.106	.229	-.562
190	235	-.225	.109	.202	-.604
190	236	-.212	.106	.213	-.559
190	237	-.175	.087	.142	-.490
190	238	-.204	.100	.167	-.604
190	239	-.179	.081	.110	-.528
190	240	-.235	.107	.145	-.699
190	241	-.207	.095	.091	-.497
190	242	-.228	.110	.096	-.595
190	243	-.265	.111	.071	-.643
190	244	-.264	.112	.072	-.755
190	245	-.223	.120	.198	-.703
190	247	-.206	.097	.115	-.647
190	248	-.222	.112	.244	-.939
190	249	-.193	.104	.108	-.541
190	250	-.209	.113	.133	-.584
190	251	-.234	.105	.147	-.778
190	252	-.236	.116	.104	-.678
190	253	-.194	.096	.117	-.580
190	254	-.362	.150	.046	-.961
190	255	-.265	.120	.083	-.728
190	256	-.250	.117	.126	-.667
190	257	-.206	.105	.123	-.645
190	258	-.233	.108	.147	-1.158
190	259	-.189	.093	.119	-.563
190	260	-.211	.111	.148	-.711
190	261	-.223	.111	.130	-.690
190	262	-.219	.115	.151	-.669
190	263	-.168	.090	.151	-.479
190	264	-.165	.105	.185	-.625
190	265	-.202	.120	.147	-.750
190	266	-.262	.122	.058	-.836
190	267	-.201	.102	.147	-.602
190	268	-.213	.112	.191	-.612
190	269	-.243	.122	.078	-.807
190	270	-.106	.104	.202	-.552
190	271	-.214	.109	.135	-.763
190	272	-.163	.114	.219	-.602
190	273	-.254	.135	.157	-.973
190	274	-.238	.132	.206	-.973
190	275	-.110	.093	.278	-.577
190	276	-.118	.101	.220	-.646
190	277	-.161	.107	.143	-.698
190	278	-.202	.112	.153	-.623
190	279	-.189	.104	.086	-.699
190	280	-.156	.119	.274	-.771
190	281	-.129	.104	.349	-.623
190	301	.220	.176	.820	-.315
190	302	-.029	.138	.555	-.492
190	303	.199	.198	.887	-.638
190	304	.161	.178	.937	-.348
190	305	.115	.197	.927	-.585
190	306	.228	.167	.824	-.324
190	307	.323	.172	.862	-.209
190	308	-.098	.147	.762	-.595
190	309	-.021	.174	.728	-.628
190	310	.132	.316	.997	-1.213
190	311	.012	.159	.520	-.870
190	312	.081	.172	.675	-.697
190	313	.198	.205	1.120	-.522
190	314	.235	.158	.920	-.284
190	315	.095	.121	.584	-.364
190	316	-.060	.237	.762	-.942
190	317	-.057	.182	.577	-.885
190	318	-.034	.183	.603	-.817
190	319	.032	.140	.604	-.509
190	320	.137	.127	.556	-.359
190	321	.106	.111	.565	-.246
190	322	-.025	.099	.436	-.373
190	323	-.062	.094	.343	-.384
190	324	-.152	.152	.542	-.863
190	325	-.092	.145	.411	-.799
190	326	-.128	.150	.395	-.851
190	327	-.083	.138	.412	-.655
190	328	.020	.125	.465	-.578
190	329	.039	.111	.484	-.371
190	330	-.056	.126	.426	-.509
190	331	-.089	.101	.322	-.444
190	332	-.165	.134	.296	-.858
190	333	-.085	.112	.318	-.936
190	334	-.117	.116	.296	-.620
190	335	-.072	.116	.280	-.526
190	336	-.025	.107	.376	-.468
190	337	-.063	.105	.282	-.484
190	338	-.054	.096	.287	-.431
190	339	-.103	.087	.194	-.409
190	340	.039	.125	.595	-.418
190	341	-.158	.122	.259	-.764
190	342	-.104	.096	.199	-.453
190	343	-.089	.104	.266	-.552
190	344	-.068	.104	.303	-.417
190	345	-.076	.106	.261	-.426
190	346	-.079	.093	.202	-.459
190	347	-.109	.094	.192	-.514
190	348	-.142	.097	.180	-.481
190	349	-.090	.116	.225	-.718
190	350	-.092	.112	.246	-.658
190	351	-.017	.122	.503	-.449
190	352	-.075	.102	.393	-.494
190	353	-.114	.096	.228	-.519
190	354	-.146	.086	.135	-.492
190	355	-.059	.106	.269	-.492
190	356	-.050	.100	.288	-.534
190	357	-.083	.100	.270	-.594
190	358	-.096	.088	.188	-.423
190	359	-.127	.099	.174	-.490
190	360	-.077	.102	.288	-.441

APPENDIX A -- PRESSURE DATA:

BASS BROTHERS BUILDING - PHASE II, DALLAS

WD	TAP	CPMEAN	CPRMS	CPMAX	CPMIN
190	361	-.129	.103	.174	-.543
190	362	-.000	.094	.311	-.399
190	363	-.036	.099	.300	-.397
190	364	-.087	.105	.264	-.614
190	365	-.066	.104	.315	-.538
190	366	-.125	.089	.157	-.453
190	401	-.283	.117	.150	-.681
190	402	-.042	.148	.483	-.582
190	403	-.190	.121	.220	-.620
190	404	.016	.100	.357	-.309
190	405	.063	.182	.813	-.452
190	406	.313	.189	855	-.343
190	407	.288	.204	.885	-.320
190	408	-.140	.162	.372	-.833
190	409	.197	.140	.735	-.258
190	410	.289	.168	.890	-.233
190	411	.273	.171	.925	-.261
190	412	.258	.156	.827	-.193
190	413	.240	.154	.771	-.197
190	414	-.158	.156	.261	-.780
190	415	.142	.130	.562	-.233
190	416	.237	.140	.734	-.216
190	417	.275	.139	.786	-.087
190	418	.271	.131	.699	-.089
190	419	.277	.147	.785	-.128
190	420	.249	.168	.936	-.348
190	421	.232	.171	.939	-.327
190	422	-.155	.166	.351	-.821
190	423	.085	.136	.592	-.367
190	424	.164	.120	.719	-.199
190	425	.249	.131	.744	-.115
190	426	.202	.130	.780	-.192
190	427	.206	.133	.757	-.185
190	428	.204	.123	.683	-.128
190	429	.163	.136	.716	-.412
190	430	-.198	.192	.414	-.959
190	431	.075	.135	.620	-.365
190	432	.178	.106	.658	-.133
190	433	.213	.118	.724	-.183
190	434	.165	.115	.686	-.207
190	435	.168	.133	.685	-.299
190	436	.156	.097	.507	-.170
190	437	.103	109	.541	-.234
190	438	-.088	.155	.436	-.777
190	439	.011	.131	.540	-.539
190	440	.004	.123	.452	-.476
190	441	.010	.102	.360	-.446
190	442	.059	.113	.526	-.401
190	443	.112	.117	.562	-.365
190	444	.100	.107	.534	-.377

WD	TAP	CPMEAN	CPRMS	CPMAX	CPMIN
190	445	.108	.105	.526	-.222
190	446	.112	.122	.614	-.292
190	447	.104	.127	.582	-.291
190	448	.055	.120	.504	-.306
190	449	-.079	.100	.292	-.462
190	450	-.035	.124	.303	-.584
190	451	.159	.105	.585	-.179
190	452	.115	.099	.543	-.239
190	453	.075	.099	.448	-.286
190	454	.023	.112	.483	-.489
190	455	.152	.116	.624	-.209
190	456	.097	.098	.461	-.269
190	457	-.009	.088	.291	-.352
190	458	-.002	.090	.282	-.321
190	459	.051	.096	.406	-.310
190	460	.044	.101	.452	-.329
190	461	.058	.093	.402	-.252
190	801	-.261	.152	.123	-1.083
190	802	-.296	.167	.147	-1.262
190	803	-.226	.130	.171	-.760
190	804	-.037	.089	.272	-.376
190	805	.029	.101	.402	-.320
190	806	.006	.105	.381	-.355
190	807	-.132	.121	.313	-.623
190	808	-.119	.089	.204	-.409
190	809	-.113	.100	.235	-.560
190	810	-.152	.112	.248	-.516
190	901	-.062	.115	.397	-.585
190	902	.028	.115	.530	-.316
190	903	-.266	.147	.304	-.882
190	904	.025	.150	.540	-.655
190	905	-.179	.109	.147	-.561
190	906	-.404	.166	.131	-1.112
190	907	-.486	.261	.170	-1.401
190	908	-.095	.114	.292	-.513
190	909	-.015	.118	.420	-.425
190	910	-.121	.117	.282	-.550
190	911	-.132	.099	219	-.518
190	912	-.275	.128	.104	-.826
190	913	-.064	.100	.352	-.462
200	101	-.295	.122	.033	-1.089
200	102	-.222	.127	.176	-.775
200	103	-.291	.129	.177	-.793
200	104	-.263	.127	.216	-.761
200	105	-.278	.142	.207	-1.060
200	106	-.115	.138	.278	-.958
200	107	-.257	.133	.186	-.993
200	108	-.264	.118	.145	-.771
200	109	-.304	.123	.032	-.799
200	110	-.293	.121	.096	-.715

WD	TAP	CPMEAN	CPRMS	CPMAX	CPMIN
200	111	-.307	.121	.066	-.781
200	112	-.267	.118	.145	-.769
200	113	-.215	.118	.239	-.782
200	114	-.255	.120	.182	-.710
200	115	-.342	.124	.077	-.786
200	116	-.252	.103	.064	-.822
200	117	-.248	.114	.093	-.687
200	118	-.290	.121	.080	-.775
200	119	-.279	.122	.076	-.903
200	120	-.346	.126	.005	-.910
200	121	-.265	.113	.087	-.618
200	122	-.233	.108	.188	-.750
200	123	-.256	.119	.079	-.725
200	124	-.371	.151	.151	-1.013
200	125	-.325	.132	.155	-.832
200	126	-.239	.095	.026	-.652
200	127	-.262	.116	.149	-.740
200	128	-.294	.118	.127	-.731
200	129	-.271	.118	.135	-.684
200	130	-.220	.109	.144	-.662
200	131	-.303	.136	.117	-.865
200	132	-.365	.126	.031	-.805
200	133	-.261	.106	.055	-.583
200	134	-.293	.110	.052	-.687
200	135	-.241	.099	.252	-.630
200	136	-.254	.107	.241	-.673
200	137	-.318	.115	.189	-.715
200	138	-.275	.109	.224	-.660
200	139	-.247	.109	.130	-.781
200	140	-.296	.142	.074	-1.235
200	141	-.366	.136	.066	-1.037
200	142	-.308	.118	.059	-.865
200	143	-.300	.104	-.001	-.698
200	144	-.261	.109	.059	-.621
200	145	-.284	.118	.051	-.819
200	146	-.349	.121	.011	-.741
200	147	-.306	.115	.047	-.680
200	148	-.249	.102	.120	-.729
200	149	-.302	.137	.100	-.961
200	150	-.373	.127	.046	-.917
200	151	-.280	.098	.015	-.622
200	152	-.336	.118	.033	-.767
200	153	-.306	.122	.078	-.851
200	154	-.378	.125	.035	-.897
200	155	-.330	.118	.071	-.816
200	156	-.263	.114	.153	-.662
200	157	-.300	.141	.141	-.812
200	158	-.326	.128	.296	-.834
200	159	-.320	.126	.263	-.791
200	160	-.293	.124	.056	-.758

APPENDIX A -- PRESSURE DATA: BASS BROTHERS BUILDING - PHASE II, DALLAS

WD	TAP	CPMEAN	CPRMS	CPMAX	CPMIN
200	161	-.315	.130	.097	-.795
200	162	-.377	.132	.063	-.886
200	163	-.333	.125	.065	-.772
200	164	-.295	.124	.039	-.837
200	165	-.243	.117	.095	-.776
200	166	-.202	.135	.197	-.992
200	167	-.263	.149	.238	-.982
200	168	-.200	.098	.128	-.614
200	169	-.279	.134	.098	-.921
200	170	-.323	.140	.062	-1.254
200	171	-.327	.144	.068	-.962
200	172	-.294	.123	.068	-.904
200	173	-.319	.146	.130	-.945
200	174	-.301	.144	.134	-.925
200	176	-.351	.109	.001	-.794
200	177	-.238	.112	.115	-.803
200	178	-.302	.144	.080	-1.166
200	179	-.314	.126	.058	-.762
200	180	-.314	.138	.042	-.843
200	181	-.388	.182	.201	-1.362
200	182	-.263	.122	.172	-.831
200	183	-.178	.109	.230	-.568
200	184	-.090	.095	.249	-.410
200	185	-.197	.133	.194	-.774
200	186	-.225	.112	.112	-.855
200	187	-.232	.114	.114	-.780
200	188	-.101	.077	.211	-.384
200	189	-.071	.094	.308	-.447
200	190	-.044	.138	.523	-.516
200	191	-.231	.104	.123	-.797
200	192	-.172	.089	.117	-.470
200	193	-.203	.108	.127	-.573
200	194	-.239	.115	.117	-.635
200	195	-.137	.102	.218	-.468
200	196	-.071	.082	.240	-.331
200	197	-.092	.104	.296	-.426
200	198	-.311	.175	.187	-1.139
200	201	-.161	.105	.184	-.582
200	202	-.247	.108	.086	-.634
200	203	-.213	.107	.180	-.623
200	204	-.153	.091	.151	-.510
200	205	-.171	.107	.240	-.658
200	206	-.248	.118	.111	-.713
200	207	-.219	.117	.145	-.684
200	208	-.135	.097	.147	-.501
200	209	-.155	.101	.140	-.519
200	210	-.223	.104	.063	-.598
200	211	-.187	.103	.149	-.550
200	212	-.161	.095	.199	-.571
200	213	-.187	.103	.207	-.644
200	214	-.257	.110	.165	-.789
200	215	-.182	.104	.183	-.703
200	216	-.120	.087	.139	-.405
200	217	-.161	.097	.141	-.514
200	218	-.117	.098	.204	-.519
200	219	-.208	.100	.110	-.533
200	220	-.248	.106	.131	-.622
200	221	-.171	.086	.110	-.459
200	222	-.187	.096	.135	-.510
200	223	-.223	.104	.127	-.688
200	224	-.199	.095	.140	-.493
200	225	-.171	.089	.090	-.480
200	226	-.179	.096	.113	-.520
200	227	-.218	.098	.091	-.560
200	228	-.213	.098	.096	-.550
200	229	-.174	.086	.156	-.495
200	230	-.209	.100	.163	-.581
200	231	-.230	.099	.138	-.634
200	232	-.227	.092	.087	-.588
200	233	-.173	.085	.111	-.532
200	234	-.184	.092	.125	-.501
200	235	-.223	.094	.103	-.551
200	236	-.212	.093	.103	-.539
200	237	-.182	.091	.106	-.530
200	238	-.202	.100	.109	-.570
200	239	-.213	.088	.076	-.531
200	240	-.252	.106	.100	-.624
200	241	-.219	.088	.031	-.540
200	242	-.250	.100	.061	-.609
200	243	-.271	.097	.044	-.595
200	244	-.270	.099	.080	-.608
200	245	-.247	.097	.091	-.617
200	247	-.233	.102	.090	-.561
200	248	-.237	.100	.116	-.735
200	249	-.201	.094	.131	-.550
200	250	-.210	.102	.147	-.572
200	251	-.229	.104	.064	-.563
200	252	-.245	.103	.088	-.611
200	253	-.212	.089	.114	-.503
200	254	-.313	.120	.033	-.776
200	255	-.279	.102	.031	-.639
200	256	-.264	.101	.040	-.619
200	257	-.244	.102	.105	-.591
200	258	-.253	.109	.120	-.671
200	259	-.198	.089	.060	-.551
200	260	-.218	.105	.106	-.611
200	261	-.242	.107	.109	-.602
200	262	-.249	.110	.097	-.635
200	263	-.193	.089	.119	-.525
200	264	-.208	.102	.117	-.624
200	265	-.239	.109	.086	-.668
200	266	-.251	.108	.109	-.766
200	267	-.200	.089	.074	-.623
200	268	-.213	.103	.102	-.689
200	269	-.256	.111	.086	-.721
200	270	-.191	.108	.113	-.710
200	271	-.224	.102	.212	-.778
200	272	-.220	.113	.296	-.692
200	273	-.256	.118	.174	-.762
200	274	-.256	.120	.201	-.899
200	275	-.201	.098	.227	-.692
200	276	-.218	.116	.162	-.747
200	277	-.261	.116	.084	-.715
200	278	-.235	.111	.121	-.801
200	279	-.215	.094	.087	-.571
200	280	-.218	.109	.115	-.707
200	281	-.233	.112	.150	-.851
200	301	.266	.159	.853	-.307
200	302	-.084	.117	.289	-.501
200	303	.222	.180	.779	-.624
200	304	.090	.141	.614	-.447
200	305	-.026	.176	.781	-.762
200	306	.265	.156	.754	-.283
200	307	.381	.154	1.136	-.207
200	308	-.173	.113	.510	-.541
200	309	-.154	.125	.591	-.523
200	310	-.088	.318	.897	-1.405
200	311	-.031	.161	.458	-.835
200	312	-.018	.158	.524	-.815
200	313	.113	.201	.874	-.667
200	314	.317	.159	.850	-.187
200	315	.110	.104	.489	-.223
200	316	-.146	.241	.642	-1.365
200	317	-.081	.180	.453	-1.508
200	318	-.067	.173	.360	-1.057
200	319	-.038	.151	.405	-.665
200	320	.168	.175	.786	-.543
200	321	.139	.120	.541	-.391
200	322	-.031	.106	.358	-.491
200	323	-.076	.100	.255	-.437
200	324	-.212	.182	.575	-.958
200	325	-.114	.162	.421	-.902
200	326	-.158	.169	.386	-.850
200	327	-.132	.154	.418	-.689
200	328	.063	.150	.522	-.550
200	329	.066	.122	.488	-.527
200	330	-.043	.117	.340	-.475
200	331	-.106	.096	.202	-.425
200	332	-.193	.172	.498	-1.057
200	333	-.086	.122	.352	-.670

APPENDIX A -- PRESSURE DATA: BASS BROTHERS BUILDING - PHASE II, DALLAS

WD	TAP	CPMEAN	CPRMS	CPMAX	CPMIN
200	334	-.122	.126	.345	-.719
200	335	-.095	.126	.337	-.658
200	336	-.026	.125	.420	-.520
200	337	-.059	.115	.378	-.495
200	338	-.075	.095	.254	-.513
200	339	-.132	.091	.190	-.459
200	340	.120	.148	.639	-.513
200	341	-.229	.157	.285	-.998
200	342	-.148	.120	.226	-.701
200	343	-.122	.129	.320	-.776
200	344	-.055	.128	.388	-.651
200	345	-.064	.127	.377	-.518
200	346	-.089	.098	.225	-.440
200	347	-.124	.101	.368	-.548
200	348	-.134	.098	.243	-.547
200	349	-.134	.142	.355	-.815
200	350	-.106	.130	.337	-.643
200	351	-.040	.130	.527	-.591
200	352	-.051	.109	.369	-.466
200	353	-.140	.104	.201	-.594
200	354	-.170	.092	.149	-.471
200	355	-.051	.116	.306	-.497
200	356	-.008	.110	.295	-.390
200	357	-.062	.108	.267	-.403
200	358	-.111	.087	.175	-.387
200	359	-.166	.101	.173	-.566
200	360	-.062	.106	.388	-.507
200	361	-.119	.097	.209	-.456
200	362	.044	.110	.366	-.303
200	363	-.029	.111	.384	-.454
200	364	-.082	.106	.285	-.472
200	365	-.058	.109	.326	-.473
200	366	-.170	.091	.131	-.455
200	401	-.357	.131	.100	-.831
200	402	.006	.162	.719	-.550
200	403	-.234	.137	.251	-.765
200	404	-.008	.108	.332	-.476
200	405	.034	.163	.901	-.560
200	406	.418	.168	.948	-.229
200	407	.415	.182	1.008	-.335
200	408	-.233	.204	.383	-1.046
200	409	.207	.134	.691	-.212
200	410	.310	.159	.879	-.205
200	411	.306	.160	.916	-.211
200	412	.298	.149	.795	-.145
200	413	.311	.136	.803	-.135
200	414	-.283	.171	.204	-1.245
200	415	.139	.132	.733	-.298
200	416	.301	.164	1.018	-.194
200	417	.367	.171	1.089	-.129

WD	TAP	CPMEAN	CPRMS	CPMAX	CPMIN
200	418	.391	.136	.833	.006
200	419	.421	.156	.902	-.041
200	420	.454	.183	1.016	-.065
200	421	.441	.186	1.011	-.063
200	422	-.297	.167	.217	-.871
200	423	.066	.122	.588	-.292
200	424	.207	.120	.709	-.124
200	425	.318	.135	.825	-.035
200	426	.269	.135	.755	-.123
200	427	.291	.138	.810	-.087
200	428	.320	.153	.893	-.070
200	429	.285	.173	.890	-.174
200	430	-.348	.218	.299	-1.122
200	431	.031	.126	.473	-.390
200	432	.206	.110	.660	-.123
200	433	.276	.126	.757	-.152
200	434	.211	.125	.681	-.180
200	435	.256	.134	.746	-.196
200	436	.255	.122	.745	-.111
200	437	.195	.143	.845	-.276
200	438	-.202	.185	.368	-1.093
200	439	.001	.124	.464	-.466
200	440	-.004	.119	.470	-.474
200	441	-.012	.109	.423	-.377
200	442	.040	.118	.588	-.338
200	443	.122	.126	.553	-.301
200	444	.106	.120	.521	-.340
200	445	.103	.112	.520	-.301
200	446	.144	.139	.605	-.400
200	447	.164	.146	.732	-.434
200	448	.091	.142	.628	-.460
200	449	-.132	.114	.277	-.563
200	450	-.086	.147	.365	-.742
200	451	.210	.121	.760	-.146
200	452	.138	.117	.577	-.236
200	453	.120	.132	.570	-.293
200	454	.045	.120	.531	-.330
200	455	.171	.100	.580	-.150
200	456	.141	.124	.529	-.287
200	457	.024	.111	.436	-.309
200	458	.013	.109	.388	-.302
200	459	.050	.105	.480	-.314
200	460	.021	.119	.467	-.372
200	461	.076	.109	.590	-.240
200	801	-.356	.179	.117	-1.172
200	802	-.306	.161	.186	-1.103
200	803	-.272	.144	.165	-.990
200	804	-.011	.091	.357	-.289
200	805	.058	.101	.401	-.261
200	806	.067	.103	.430	-.271

WD	TAP	CPMEAN	CPRMS	CPMAX	CPMIN
200	807	-.198	.128	.151	-.767
200	808	-.216	.093	.116	-.537
200	809	-.214	.100	.158	-.544
200	810	-.182	.102	.177	-.569
200	901	-.086	.133	.432	-.638
200	902	.017	.110	.606	-.368
200	903	-.296	.134	.161	-.891
200	904	.026	.141	.550	-.831
200	905	-.208	.107	.132	-.631
200	906	-.438	.165	.191	-1.024
200	907	-.775	.274	-.078	-2.195
200	908	-.069	.113	.353	-.395
200	909	-.066	.117	.299	-.596
200	910	-.145	.120	.241	-.582
200	911	-.163	.115	.288	-.646
200	912	-.353	.146	.106	-1.096
200	913	-.080	.111	.365	-.446
210	101	-.308	.127	.068	-.813
210	102	-.224	.124	.207	-.844
210	103	-.304	.128	.358	-.901
210	104	-.265	.127	.334	-.811
210	105	-.238	.133	.316	-.859
210	106	-.085	.140	.408	-.675
210	107	-.199	.170	.479	-1.005
210	108	-.285	.130	.151	-1.088
210	109	-.292	.113	.036	-.771
210	110	-.290	.112	.147	-.787
210	111	-.342	.114	.121	-.700
210	112	-.307	.116	.147	-.838
210	113	-.206	.113	.263	-.750
210	114	-.230	.116	.277	-.758
210	115	-.325	.123	.205	-.878
210	116	-.256	.106	.066	-.958
210	117	-.237	.110	.113	-.850
210	118	-.278	.118	.100	-.897
210	119	-.251	.113	.132	-.660
210	120	-.338	.115	.027	-.838
210	121	-.266	.106	.110	-.751
210	122	-.259	.118	.158	-.983
210	123	-.292	.126	.216	-.899
210	124	-.354	.147	.078	-1.075
210	125	-.305	.133	.180	-1.110
210	126	-.233	.095	.072	-.675
210	127	-.249	.107	.099	-.626
210	128	-.324	.124	.044	-1.033
210	129	-.295	.130	.078	-1.118
210	130	-.255	.123	.180	-1.554
210	131	-.276	.142	.085	-.944
210	132	-.357	.135	.032	-.953
210	133	-.250	.112	.094	-.678

APPENDIX A -- PRESSURE DATA: BASS BROTHERS BUILDING - PHASE II, DALLAS

WD	TAP	CPMEAN	CPRMS	CPMAX	CPMIN
210	134	-.278	.111	.052	-.697
210	135	-.247	.121	.163	-.714
210	136	-.264	.134	.167	-.920
210	137	-.336	.140	.142	-1.047
210	138	-.283	.127	.191	-.803
210	139	-.267	.112	.137	-.683
210	140	-.263	.134	.084	-.930
210	141	-.346	.130	.060	-.904
210	142	-.290	.118	.158	-.736
210	143	-.291	.117	.058	-.749
210	144	-.273	.114	.070	-.845
210	145	-.292	.124	.126	-.981
210	146	-.364	.125	.066	-.888
210	147	-.313	.116	.081	-.869
210	148	-.261	.109	.085	-.687
210	149	-.218	.114	.135	-.776
210	150	-.295	.123	.274	-.782
210	151	-.252	.098	.149	-.770
210	152	-.306	.128	.082	-.872
210	153	-.342	.145	.125	-1.307
210	154	-.430	.148	.018	-1.130
210	155	-.366	.138	.051	-.954
210	156	-.196	.097	.125	-.529
210	157	-.175	.131	.325	-.770
210	158	-.218	.136	.385	-.693
210	159	-.212	.100	.130	-.556
210	160	-.244	.114	.116	-.624
210	161	-.331	.133	.066	-.997
210	162	-.427	.146	.018	-1.224
210	163	-.361	.130	.052	-1.014
210	164	-.333	.136	.019	-1.016
210	165	-.215	.108	.111	-.720
210	166	-.137	.112	.274	-.567
210	167	-.165	.129	.262	-.929
210	168	-.153	.091	.120	-.529
210	169	-.240	.120	.078	-.740
210	170	-.326	.129	.043	-1.021
210	171	-.380	.154	.057	-1.221
210	172	-.366	.166	.095	-1.259
210	173	-.398	.214	.097	-1.631
210	174	-.212	.131	.254	-.727
210	176	-.370	.122	-.006	-.966
210	177	-.208	.110	.132	-.700
210	178	-.222	.121	.164	-.739
210	179	-.270	.122	.142	-.727
210	180	-.288	.129	.120	-1.071
210	181	-.330	.170	.155	-1.271
210	182	-.242	.113	.108	-.796
210	183	-.151	.099	.156	-.510
210	184	-.057	.087	.261	-.405
210	185	-.144	.118	.231	-.633
210	186	-.212	.106	.199	-.645
210	187	-.229	.110	.199	-.923
210	188	-.108	.084	.177	-.417
210	189	-.066	.099	.276	-.459
210	190	-.033	.123	.439	-.483
210	191	-.212	.109	.143	-.655
210	192	-.157	.078	.095	-.429
210	193	-.176	.094	.126	-.501
210	194	-.211	.097	.104	-.568
210	195	-.129	.094	.228	-.475
210	196	-.059	.080	.204	-.324
210	197	-.069	.099	.267	-.398
210	198	-.202	.144	.266	-.799
210	201	-.159	.106	.198	-.569
210	202	-.251	.111	.100	-.648
210	203	-.200	.108	.163	-.551
210	204	-.160	.088	.131	-.488
210	205	-.163	.102	.215	-.633
210	206	-.253	.110	.078	-.878
210	207	-.216	.107	.106	-.842
210	208	-.162	.095	.123	-.539
210	209	-.164	.098	.136	-.570
210	210	-.238	.101	.083	-.648
210	211	-.202	.099	.129	-.595
210	212	-.157	.091	.163	-.451
210	213	-.167	.098	.168	-.615
210	214	-.248	.105	.100	-.749
210	215	-.177	.097	.161	-.670
210	216	-.123	.087	.155	-.402
210	217	-.158	.096	.161	-.465
210	218	-.115	.099	.187	-.446
210	219	-.206	.099	.149	-.560
210	220	-.226	.105	.123	-.635
210	221	-.155	.096	.125	-.613
210	222	-.168	.106	.134	-.693
210	223	-.202	.101	.152	-.573
210	224	-.188	.105	.126	-.704
210	225	-.150	.088	.168	-.436
210	226	-.158	.095	.194	-.470
210	227	-.197	.098	.150	-.525
210	228	-.187	.096	.149	-.520
210	229	-.162	.082	.167	-.457
210	230	-.211	.099	.155	-.587
210	231	-.229	.100	.146	-.624
210	232	-.224	.092	.117	-.562
210	233	-.157	.096	.133	-.619
210	234	-.160	.101	.153	-.569
210	235	-.198	.103	.124	-.581
210	236	-.181	.100	.135	-.514
210	237	-.161	.085	.119	-.453
210	238	-.173	.092	.137	-.500
210	239	-.207	.083	.071	-.553
210	240	-.227	.100	.097	-.531
210	241	-.200	.094	.065	-.607
210	242	-.226	.104	.087	-.533
210	243	-.237	.102	.081	-.595
210	244	-.228	.103	.110	-.595
210	245	-.220	.092	.052	-.578
210	247	-.202	.095	.143	-.587
210	248	-.218	.098	.098	-.591
210	249	-.181	.093	.134	-.529
210	250	-.191	.101	.164	-.574
210	251	-.224	.103	.107	-.654
210	252	-.201	.097	.120	-.539
210	253	-.181	.087	.130	-.468
210	254	-.305	.118	.083	-.717
210	255	-.243	.101	.117	-.571
210	256	-.226	.100	.128	-.554
210	257	-.191	.093	.111	-.507
210	258	-.223	.100	.122	-.623
210	259	-.176	.092	.116	-.502
210	260	-.188	.107	.164	-.566
210	261	-.205	.110	.145	-.606
210	262	-.207	.110	.153	-.651
210	263	-.154	.079	.097	-.455
210	264	-.189	.099	.101	-.525
210	265	-.217	.104	.088	-.595
210	266	-.225	.099	.075	-.598
210	267	-.171	.091	.104	-.486
210	268	-.183	.106	.160	-.566
210	269	-.228	.112	.120	-.624
210	270	-.147	.097	.162	-.574
210	271	-.185	.088	.101	-.630
210	272	-.183	.099	.160	-.493
210	273	-.221	.106	.121	-.763
210	274	-.220	.105	.144	-.748
210	275	-.140	.086	.145	-.494
210	276	-.155	.100	.186	-.473
210	277	-.222	.105	.094	-.588
210	278	-.199	.101	.103	-.578
210	279	-.169	.089	.150	-.494
210	280	-.179	.108	.202	-.824
210	281	-.180	.098	.225	-.526
210	301	.182	.175	.778	-.472
210	302	-.139	.110	.276	-.531
210	303	-.001	.254	.699	-.878
210	304	-.044	.147	.486	-.883
210	305	-.170	.170	.487	-1.238
210	306	.142	.187	.731	-.721

APPENDIX A -- PRESSURE DATA: BASS BROTHERS BUILDING - PHASE II, DALLAS

WD	TAP	CPMEAN	CPRMS	CPMAX	CPMIN
210	307	.288	.180	.804	-.520
210	308	-.179	.108	.221	-.551
210	309	-.196	.110	.177	-.563
210	310	-.328	.301	.727	-2.084
210	311	-.214	.181	.304	-1.109
210	312	-.180	.182	.427	-1.189
210	313	-.068	.207	.806	-.869
210	314	.140	.209	.883	-.814
210	315	.037	.106	.392	-.467
210	316	-.225	.219	.557	-1.225
210	317	-.185	.176	.303	-1.055
210	318	-.169	.173	.307	-.965
210	319	-.141	.145	.345	-.645
210	320	.006	.210	.600	-.765
210	321	.027	.139	.526	-.429
210	322	-.070	.112	.275	-.544
210	323	-.093	.102	.177	-.651
210	324	-.218	.164	.428	-.997
210	325	-.139	.154	.331	-.768
210	326	-.185	.158	.334	-.881
210	327	-.160	.144	.390	-.754
210	328	-.065	.156	.545	-.561
210	329	-.033	.142	.412	-.551
210	330	-.114	.133	.349	-.584
210	331	-.130	.102	.271	-.525
210	332	-.241	.160	.477	-1.097
210	333	-.153	.135	.261	-.676
210	334	-.199	.143	.287	-.917
210	335	-.176	.149	.297	-.969
210	336	-.105	.128	.338	-.582
210	337	-.114	.124	.305	-.674
210	338	-.103	.101	.212	-.511
210	339	-.142	.089	.178	-.481
210	340	-.002	.153	.608	-.570
210	341	-.223	.136	.255	-1.129
210	342	-.175	.111	.160	-.845
210	343	-.164	.125	.349	-.871
210	344	-.158	.120	.263	-.724
210	345	-.124	.121	.342	-.634
210	346	-.101	.102	.303	-.488
210	347	-.111	.099	.287	-.476
210	348	-.152	.099	.300	-.518
210	349	-.182	.142	.262	-.883
210	350	-.159	.136	.244	-.826
210	351	-.095	.133	.385	-.715
210	352	-.116	.116	.304	-.569
210	353	-.148	.100	.162	-.574
210	354	-.145	.089	.174	-.458
210	355	-.096	.118	.280	-.484
210	356	-.102	.124	.282	-.509
210	357	-.116	.115	.235	-.536
210	358	-.132	.088	.255	-.447
210	359	-.159	.094	.240	-.471
210	360	-.136	.104	.329	-.459
210	361	-.146	.099	.266	-.488
210	362	-.060	.117	.264	-.590
210	363	-.075	.103	.283	-.446
210	364	-.141	.100	.209	-.475
210	365	-.111	.104	.316	-.469
210	366	-.154	.078	.132	-.433
210	401	-.324	.152	.177	-1.116
210	402	-.054	.217	.797	-.913
210	403	-.211	.165	.417	-.970
210	404	-.011	.132	.612	-.465
210	405	.031	.184	.675	-.900
210	406	.268	.222	1.024	-.368
210	407	.250	.242	1.123	-.420
210	408	-.137	.219	.619	-1.269
210	409	.185	.147	.711	-.248
210	410	.250	.164	.908	-.173
210	411	.241	.165	.876	-.209
210	412	.243	.153	.790	-.180
210	413	.256	.166	1.040	-.216
210	414	-.167	.184	.449	-.965
210	415	.119	.145	.736	-.356
210	416	.205	.139	.743	-.287
210	417	.259	.139	.787	-.253
210	418	.261	.120	.685	-.112
210	419	.280	.140	.774	-.137
210	420	.262	.179	.905	-.245
210	421	.240	.193	1.014	-.331
210	422	-.174	.205	.377	-1.114
210	423	.075	.135	.682	-.310
210	424	.164	.110	.747	-.157
210	425	.255	.120	.825	-.151
210	426	.205	.119	.679	-.177
210	427	.222	.125	.793	-.144
210	428	.226	.143	.834	-.210
210	429	.176	.174	.963	-.367
210	430	-.199	.237	.523	-1.585
210	431	.076	.143	.633	-.421
210	432	.188	.102	.615	-.099
210	433	.227	.114	.786	-.157
210	434	.175	.114	.701	-.174
210	435	.186	.127	.784	-.270
210	436	.164	.118	.678	-.202
210	437	.102	.142	.704	-.366
210	438	-.061	.164	.599	-.785
210	439	.021	.130	.574	-.473
210	440	.020	.119	.509	-.392
210	441	.032	.108	.462	-.380
210	442	.089	.117	.590	-.350
210	443	.123	.117	.553	-.343
210	444	.120	.107	.549	-.315
210	445	.108	.101	.514	-.323
210	446	.101	.109	.560	-.311
210	447	.086	.124	.637	-.333
210	448	.043	.120	.566	-.336
210	449	-.059	.112	.341	-.511
210	450	-.009	.135	.382	-.542
210	451	.150	.110	.655	-.184
210	452	.119	.098	.544	-.229
210	453	.058	.099	.417	-.249
210	454	-.001	.126	.480	-.466
210	455	.121	.097	.496	-.234
210	456	.072	.096	.398	-.270
210	457	-.053	.105	.454	-.432
210	458	-.035	.103	.484	-.401
210	459	.030	.107	.440	-.357
210	460	.026	.111	.461	-.390
210	461	.011	.099	.379	-.301
210	801	-.259	.146	.140	-.833
210	802	-.339	.161	.155	-.969
210	803	-.214	.129	.226	-.659
210	804	-.075	.094	.268	-.371
210	805	-.009	.104	.373	-.393
210	806	-.055	.122	.341	-.448
210	807	-.149	.114	.280	-.571
210	808	-.187	.088	.093	-.491
210	809	-.173	.098	.141	-.549
210	810	-.177	.107	.167	-.630
210	901	-.162	.122	.298	-.619
210	902	-.063	.110	.513	-.485
210	903	-.277	.142	.220	-.938
210	904	.007	.166	.696	-.693
210	905	-.263	.119	.065	-.944
210	906	-.391	.173	.195	-1.181
210	907	-.615	.279	.070	-1.793
210	908	-.066	.116	.376	-.500
210	909	-.133	.130	.329	-.600
210	910	-.166	.110	.238	-.574
210	911	-.191	.122	.213	-.711
210	912	-.304	.155	.281	-.866
210	913	-.105	.099	.260	-.416
220	101	-.300	.134	.251	-.993
220	102	-.210	.138	.222	-.839
220	103	-.294	.144	.558	-.942
220	104	-.250	.139	.543	-.814
220	105	-.239	.144	.413	-.987
220	106	.006	.137	.528	-.431

APPENDIX A -- PRESSURE DATA:

BASS BROTHERS BUILDING - PHASE II, DALLAS

WD	TAP	CPMEAN	CPRMS	CPMAX	CPMIN
220	107	-.024	.176	.639	-.756
220	108	-.280	.135	.082	-1.207
220	109	-.273	.118	.106	-.698
220	110	-.270	.120	.106	-.706
220	111	-.325	.125	.059	-.774
220	112	-.296	.131	.085	-.938
220	113	-.223	.127	.185	-.859
220	114	-.237	.130	.248	-.807
220	115	-.333	.137	.148	-1.240
220	116	-.225	.107	.156	-.903
220	117	-.207	.113	.147	-.635
220	118	-.248	.120	.150	-.687
220	119	-.254	.116	.167	-.700
220	120	-.348	.123	.081	-.798
220	121	-.266	.111	.118	-.664
220	122	-.259	.123	.118	-.833
220	123	-.270	.128	.115	-1.037
220	124	-.355	.162	.062	-1.208
220	125	-.297	.141	.095	-.979
220	126	-.220	.094	.110	-.546
220	127	-.238	.115	.107	-.665
220	128	-.310	.124	.037	-1.001
220	129	-.271	.125	.077	-1.075
220	130	-.227	.120	.155	-.789
220	131	-.258	.147	.199	-.989
220	132	-.338	.138	.046	-.919
220	133	-.232	.111	.144	-.629
220	134	-.251	.113	.118	-.753
220	135	-.243	.111	.090	-.701
220	136	-.245	.122	.189	-.945
220	137	-.323	.129	.164	-1.028
220	138	-.267	.117	.160	-.807
220	139	-.248	.109	.087	-.725
220	140	-.273	.145	.164	-1.077
220	141	-.353	.137	.106	-.816
220	142	-.278	.118	.136	-.677
220	143	-.276	.110	.102	-.732
220	144	-.274	.126	.120	-.932
220	145	-.288	.139	.090	-1.307
220	146	-.364	.141	.030	-1.025
220	147	-.305	.128	.065	-.865
220	148	-.273	.114	.086	-.674
220	149	-.255	.140	.169	-.897
220	150	-.343	.134	.229	-.921
220	151	-.255	.099	.188	-.700
220	152	-.299	.129	.102	-.876
220	153	-.344	.140	.077	-1.483
220	154	-.436	.144	-.006	-1.452
220	155	-.363	.132	.036	-1.172
220	156	-.200	.100	.219	-.651
220	157	-.205	.134	.378	-.804
220	158	-.246	.121	.191	-.801
220	159	-.228	.116	.191	-.811
220	160	-.291	.127	.110	-.966
220	161	-.355	.146	.103	-1.257
220	162	-.443	.153	.059	-1.219
220	163	-.372	.136	.081	-1.094
220	164	-.313	.121	.040	-.808
220	165	-.196	.107	.147	-.628
220	166	-.110	.112	.409	-.469
220	167	-.130	.122	.355	-.591
220	168	-.136	.096	.188	-.636
220	169	-.246	.134	.157	-1.013
220	170	-.345	.149	.084	-1.491
220	171	-.392	.165	.048	-1.389
220	172	-.336	.133	.043	-.946
220	173	-.353	.153	.120	-1.077
220	174	-.216	.109	.118	-.577
220	176	-.387	.123	.008	-.951
220	177	-.210	.110	.153	-.605
220	178	-.212	.119	.253	-.692
220	179	-.266	.120	.131	-.656
220	180	-.309	.117	.057	-.764
220	181	-.351	.171	.244	-1.158
220	182	-.245	.110	.186	-.682
220	183	-.134	.097	.277	-.476
220	184	-.052	.081	.254	-.313
220	185	-.167	.106	.187	-.653
220	186	-.225	.098	.093	-.580
220	187	-.238	.101	.097	-.617
220	188	-.090	.083	.200	-.361
220	189	-.042	.098	.285	-.391
220	190	-.003	.130	.537	-.416
220	191	-.206	.106	.121	-.672
220	192	-.161	.076	.126	-.458
220	193	-.186	.092	.155	-.540
220	194	-.224	.096	.113	-.593
220	195	-.118	.090	.251	-.413
220	196	-.032	.077	.269	-.241
220	197	-.036	.095	.325	-.315
220	198	-.173	.129	.214	-.585
220	201	-.153	.105	.188	-.495
220	202	-.252	.109	.076	-.598
220	203	-.193	.104	.110	-.514
220	204	-.154	.090	.178	-.452
220	205	-.156	.101	.210	-.519
220	206	-.249	.114	.096	-.849
220	207	-.202	.114	.184	-.843
220	208	-.165	.107	.178	-.585
220	209	-.155	.109	.199	-.574
220	210	-.235	.115	.142	-.668
220	211	-.191	.118	.160	-.728
220	212	-.158	.098	.249	-.518
220	213	-.164	.104	.267	-.534
220	214	-.247	.113	.216	-.655
220	215	-.169	.107	.223	-.560
220	216	-.120	.086	.138	-.389
220	217	-.155	.095	.126	-.459
220	218	-.107	.099	.199	-.432
220	219	-.205	.104	.101	-.590
220	220	-.229	.106	.194	-.709
220	221	-.169	.088	.136	-.488
220	222	-.181	.098	.139	-.583
220	223	-.205	.099	.205	-.595
220	224	-.215	.113	.167	-1.319
220	225	-.162	.098	.147	-.791
220	226	-.164	.103	.174	-.770
220	227	-.200	.102	.148	-.611
220	228	-.189	.099	.161	-.542
220	229	-.146	.092	.173	-.532
220	230	-.185	.106	.150	-.552
220	231	-.208	.107	.162	-.628
220	232	-.202	.100	.144	-.548
220	233	-.192	.100	.119	-.767
220	234	-.176	.097	.119	-.637
220	235	-.212	.097	.063	-.537
220	236	-.186	.092	.079	-.486
220	237	-.162	.089	.110	-.472
220	238	-.170	.099	.125	-.535
220	239	-.173	.088	.145	-.451
220	240	-.218	.107	.116	-.627
220	241	-.190	.092	.108	-.529
220	242	-.215	.104	.129	-.625
220	243	-.227	.099	.106	-.595
220	244	-.224	.103	.120	-.691
220	245	-.210	.091	.076	-.554
220	247	-.178	.098	.145	-.498
220	248	-.239	.111	.080	-.825
220	249	-.192	.098	.170	-.635
220	250	-.195	.105	.199	-.606
220	251	-.216	.109	.173	-.653
220	252	-.187	.098	.192	-.593
220	253	-.156	.085	.139	-.417
220	254	-.259	.110	.076	-.642
220	255	-.218	.099	.142	-.542
220	256	-.200	.099	.166	-.563
220	257	-.163	.084	.107	-.490
220	258	-.201	.105	.163	-.571
220	259	-.139	.081	.119	-.425
220	260	-.151	.095	.153	-.496

APPENDIX A -- PRESSURE DATA: BASS BROTHERS BUILDING - PHASE II, DALLAS

WD	TAP	CPMEAN	CPRMS	CPMAX	CPMIN
220	261	-.169	.095	.127	-.534
220	262	-.174	.093	.110	-.525
220	263	-.135	.078	.105	-.410
220	264	-.160	.095	.128	-.488
220	265	-.186	.098	.111	-.539
220	266	-.181	.096	.152	-.516
220	267	-.146	.082	.124	-.459
220	268	-.149	.092	.160	-.523
220	269	-.202	.099	.164	-.615
220	270	-.170	.099	.149	-.527
220	271	-.155	.083	.153	-.442
220	272	-.181	.094	.141	-.490
220	273	-.207	.102	.132	-.569
220	274	-.198	.098	.152	-.550
220	275	-.150	.078	.181	-.447
220	276	-.177	.095	.212	-.520
220	277	-.230	.102	.149	-.656
220	278	-.200	.095	.180	-.591
220	279	-.149	.085	.121	-.490
220	280	-.155	.099	.181	-.529
220	281	-.194	.100	.189	-.584
220	301	.124	.158	.794	-.496
220	302	-.192	.111	.220	-.683
220	303	-.285	.222	.439	-.986
220	304	-.214	.171	.356	-.930
220	305	-.396	.212	.329	-1.280
220	306	-.057	.221	.586	-1.095
220	307	.115	.178	.701	-.739
220	308	-.159	.098	.139	-.484
220	309	-.202	.104	.120	-.537
220	310	-.614	.281	.235	-2.244
220	311	-.506	.226	.073	-1.488
220	312	-.439	.242	.251	-1.981
220	313	-.301	.248	.671	-1.242
220	314	-.070	.215	.604	-1.000
220	315	-.076	.114	.380	-.564
220	316	-.295	.164	.262	-1.402
220	317	-.336	.159	.217	-1.090
220	318	-.330	.159	.213	-1.044
220	319	-.305	.130	.054	-.815
220	320	-.267	.173	.485	-.864
220	321	-.168	.165	.385	-.854
220	322	-.164	.135	.269	-.811
220	323	-.150	.121	.205	-.832
220	324	-.256	.127	.099	-1.190
220	325	-.230	.133	.184	-1.046
220	326	-.284	.139	.138	-1.067
220	327	-.266	.134	.144	-1.074
220	328	-.258	.119	.258	-.759
220	329	-.197	.133	.259	-.657
220	330	-.220	.134	.181	-.774
220	331	-.203	.136	.170	-.840
220	332	-.288	.129	.109	-.901
220	333	-.216	.119	.164	-.690
220	334	-.267	.125	.136	-.755
220	335	-.254	.131	.161	-.921
220	336	-.254	.112	.055	-.674
220	337	-.313	.162	.143	-1.030
220	338	-.242	.126	.187	-.720
220	339	-.210	.118	.168	-.833
220	340	-.058	.150	.465	-.688
220	341	-.301	.138	.124	-.891
220	342	-.298	.114	.097	-.756
220	343	-.272	.125	.160	-.772
220	344	-.254	.124	.142	-.743
220	345	-.258	.126	.142	-.925
220	346	-.234	.114	.171	-.732
220	347	-.174	.120	.211	-.799
220	348	-.165	.120	.249	-.924
220	349	-.299	.147	.178	-1.304
220	350	-.302	.154	.123	-1.303
220	351	-.259	.150	.314	-1.020
220	352	-.201	.124	.250	-.852
220	353	-.206	.111	.178	-.820
220	354	-.178	.111	.171	-.834
220	355	-.210	.118	.186	-.634
220	356	-.180	.129	.211	-.733
220	357	-.206	.125	.182	-.689
220	358	-.213	.102	.084	-.593
220	359	-.202	.112	.136	-.602
220	360	-.177	.113	.232	-.649
220	361	-.191	.121	.173	-.824
220	362	-.138	.114	.256	-.601
220	363	-.145	.104	.178	-.513
220	364	-.189	.109	.146	-.619
220	365	-.183	.110	.146	-.611
220	366	-.188	.091	.096	-.516
220	401	-.297	.147	.247	-1.008
220	402	-.065	.259	.900	-.926
220	403	-.148	.148	.412	-.833
220	404	.049	.126	.516	-.483
220	405	.108	.179	.892	-.552
220	406	.196	.204	.853	-.580
220	407	.149	.207	.840	-.692
220	408	.057	.185	.600	-.695
220	409	.280	.160	.892	-.207
220	410	.318	.174	1.038	-.219
220	411	.296	.177	.960	-.222
220	412	.315	.177	.991	-.196
220	413	.361	.178	1.116	-.130
220	414	-.022	.143	.472	-.631
220	415	.239	.161	.878	-.273
220	416	.287	.156	.876	-.154
220	417	.327	.149	.979	-.098
220	418	.317	.125	.784	-.081
220	419	.324	.137	.888	-.127
220	420	.220	.144	.778	-.331
220	421	.147	.143	.694	-.362
220	422	-.020	.137	.503	-.608
220	423	.174	.153	.761	-.443
220	424	.226	.130	.828	-.173
220	425	.296	.122	.726	-.043
220	426	.250	.124	.708	-.077
220	427	.252	.122	.743	-.066
220	428	.169	.103	.508	-.182
220	429	.095	.117	.517	-.255
220	430	-.086	.154	.442	-.713
220	431	.139	.136	.682	-.341
220	432	.212	.116	.676	-.137
220	433	.256	.125	.779	-.142
220	434	.200	.126	.692	-.230
220	435	.218	.127	.737	-.235
220	436	.118	.089	.534	-.140
220	437	.040	.105	.595	-.317
220	438	-.036	.153	.579	-.787
220	439	.045	.136	.578	-.420
220	440	.024	.129	.523	-.440
220	441	.009	.116	.415	-.369
220	442	.079	.135	.606	-.342
220	443	.157	.136	.674	-.277
220	444	.148	.121	.549	-.338
220	445	.139	.107	.518	-.152
220	446	.093	.115	.465	-.294
220	447	.080	.129	.545	-.360
220	448	.008	.120	.503	-.455
220	449	-.067	.106	.340	-.443
220	450	-.039	.139	.483	-.785
220	451	.200	.124	.658	-.153
220	452	.143	.104	.568	-.191
220	453	.052	.105	.485	-.380
220	454	-.084	.118	.261	-.579
220	455	.159	.111	.599	-.182
220	456	.068	.102	.403	-.318
220	457	-.139	.110	.213	-.586
220	458	-.105	.102	.237	-.440
220	459	.089	.107	.451	-.312
220	460	.093	.110	.437	-.321
220	461	-.016	.097	.387	-.349
220	801	-.286	.137	.115	-.883
220	802	-.342	.151	.119	-.925

APPENDIX A -- PRESSURE DATA: BASS BROTHERS BUILDING - PHASE II, DALLAS

WD	TAP	CPMEAN	CPRMS	CPMAX	CPMIN
220	803	-.217	.121	.166	-.813
220	804	-.157	.091	.133	-.565
220	805	-.063	.103	.267	-.484
220	806	-.121	.114	.227	-.621
220	807	-.142	.113	.296	-.683
220	808	-.199	.087	.064	-.528
220	809	-.181	.094	.128	-.511
220	810	-.147	.094	.144	-.481
220	901	-.280	.130	.102	-.750
220	902	-.220	.122	.131	-.803
220	903	-.225	.167	.445	-1.014
220	904	.011	.155	.567	-.562
220	905	-.290	.133	.100	-.875
220	906	-.322	.162	.207	-.938
220	907	-.528	.268	.133	-1.753
220	908	-.143	.125	.280	-.564
220	909	-.195	.128	.214	-.740
220	910	-.189	.123	.282	-.716
220	911	-.200	.146	.211	-1.158
220	912	-.237	.144	.300	-.804
220	913	-.126	.107	.402	-.635
230	101	-.326	.154	.148	-1.051
230	102	-.232	.156	.335	-.992
230	103	-.314	.179	.402	-.927
230	104	-.266	.170	.531	-.827
230	105	-.272	.156	.421	-1.058
230	106	-.019	.132	.420	-.456
230	107	-.003	.160	.615	-.615
230	108	-.346	.152	.136	-1.138
230	109	-.299	.118	.082	-.777
230	110	-.305	.122	.114	-.817
230	111	-.364	.129	.062	-.916
230	112	-.336	.136	.081	-.960
230	113	-.245	.138	.215	-.966
230	114	-.261	.139	.269	-.927
230	115	-.366	.141	.143	-.980
230	116	-.258	.110	.136	-.673
230	117	-.239	.125	.244	-.696
230	118	-.285	.132	.246	-.797
230	119	-.287	.135	.344	-.799
230	120	-.395	.141	.088	-1.054
230	121	-.303	.126	.149	-.919
230	122	-.282	.117	.120	-.783
230	123	-.293	.124	.114	-.745
230	124	-.403	.184	.098	-1.428
230	125	-.334	.157	.198	-1.159
230	126	-.248	.100	.104	-.605
230	127	-.275	.125	.221	-.725
230	128	-.356	.134	.198	-.978
230	129	-.309	.131	.194	-.913
230	130	-.258	.122	.109	-.901
230	131	-.288	.169	.206	-1.229
230	132	-.377	.155	.160	-1.224
230	133	-.255	.113	.159	-.747
230	134	-.277	.117	.107	-.716
230	135	-.258	.112	.137	-.747
230	136	-.255	.116	.137	-.790
230	137	-.338	.123	.064	-.846
230	138	-.279	.112	.068	-.695
230	139	-.267	.107	.089	-.818
230	140	-.318	.171	.289	-1.184
230	141	-.404	.161	.050	-1.206
230	142	-.323	.136	.114	-.911
230	143	-.293	.113	.102	-.745
230	144	-.310	.118	.065	-.916
230	145	-.316	.128	.076	-1.185
230	146	-.400	.130	.047	-1.163
230	147	-.335	.119	.079	-.989
230	148	-.288	.121	.067	-.870
230	149	-.239	.130	.169	-.794
230	150	-.327	.138	.150	-.861
230	151	-.265	.102	.242	-.657
230	152	-.334	.136	.184	-.877
230	153	-.362	.154	.056	-1.266
230	154	-.466	.159	-.020	-1.239
230	155	-.389	.147	.023	-1.119
230	156	-.232	.110	.240	-.650
230	157	-.207	.152	.371	-.794
230	158	-.273	.145	.352	-.951
230	159	-.243	.136	.310	-.897
230	160	-.266	.129	.165	-.823
230	161	-.352	.151	.081	-1.008
230	162	-.465	.166	-.029	-1.200
230	163	-.387	.145	.003	-.975
230	164	-.361	.134	.014	-.919
230	165	-.221	.112	.127	-.827
230	166	-.122	.106	.256	-.534
230	167	-.121	.112	.365	-.645
230	168	-.120	.096	.356	-.429
230	169	-.219	.126	.265	-.760
230	170	-.329	.141	.090	-1.013
230	171	-.387	.152	.044	-1.227
230	172	-.380	.147	-.016	-1.070
230	173	-.414	.189	.048	-1.207
230	174	-.221	.125	.157	-.719
230	176	-.341	.119	-.030	-.813
230	177	-.225	.116	.103	-.720
230	178	-.213	.124	.216	-.851
230	179	-.247	.124	.109	-.728
230	180	-.302	.127	.053	-.802
230	181	-.384	.189	.249	-1.239
230	182	-.290	.124	.110	-.765
230	183	-.154	.105	.168	-.612
230	184	-.070	.087	.199	-.370
230	185	-.189	.117	.150	-.608
230	186	-.257	.108	.093	-.675
230	187	-.279	.119	.093	-.788
230	188	-.111	.081	.151	-.343
230	189	-.041	.095	.359	-.337
230	190	.020	.136	.659	-.458
230	191	-.242	.112	.096	-.698
230	192	-.191	.086	.111	-.491
230	193	-.212	.103	.144	-.595
230	194	-.255	.109	.125	-.675
230	195	-.127	.094	.206	-.416
230	196	-.037	.078	.235	-.302
230	197	-.031	.096	.317	-.359
230	198	-.168	.141	.267	-.757
230	201	-.174	.120	.193	-.598
230	202	-.282	.126	.123	-.734
230	203	-.205	.118	.168	-.829
230	204	-.170	.105	.166	-.598
230	205	-.166	.115	.199	-.638
230	206	-.267	.130	.143	-.878
230	207	-.217	.128	.195	-.716
230	208	-.206	.114	.174	-.742
230	209	-.181	.111	.189	-.632
230	210	-.263	.115	.116	-.702
230	211	-.216	.115	.133	-.779
230	212	-.170	.098	.118	-.581
230	213	-.173	.104	.146	-.602
230	214	-.274	.114	.071	-.857
230	215	-.201	.106	.148	-.719
230	216	-.153	.091	.154	-.424
230	217	-.183	.101	.159	-.507
230	218	-.129	.102	.205	-.457
230	219	-.242	.114	.158	-.651
230	220	-.252	.114	.138	-.626
230	221	-.183	.106	.242	-.648
230	222	-.194	.117	.265	-.787
230	223	-.225	.110	.151	-.677
230	224	-.265	.134	.133	-1.011
230	225	-.188	.100	.136	-.573
230	226	-.173	.102	.175	-.504
230	227	-.205	.103	.161	-.546
230	228	-.190	.100	.154	-.525
230	229	-.171	.099	.162	-.537
230	230	-.239	.122	.233	-.776
230	231	-.242	.117	.152	-.691
230	232	-.243	.110	.120	-.681

APPENDIX A -- PRESSURE DATA: BASS BROTHERS BUILDING - PHASE II, DALLAS

WD	TAP	CPMEAN	CPRMS	CPMAX	CPMIN
230	233	-.240	.123	.194	-.652
230	234	-.196	.112	.207	-.561
230	235	-.229	.111	.141	-.600
230	236	-.197	.107	.177	-.560
230	237	-.175	.092	.181	-.536
230	238	-.181	.099	.204	-.601
230	239	-.196	.088	.088	-.545
230	240	-.243	.115	.164	-.721
230	241	-.215	.102	.138	-.635
230	242	-.235	.111	.165	-.619
230	243	-.252	.110	.122	-.657
230	244	-.238	.112	.147	-.676
230	245	-.232	.097	.116	-.595
230	247	-.195	.099	.091	-.579
230	248	-.278	.125	.150	-.803
230	249	-.207	.095	.083	-.665
230	250	-.203	.101	.086	-.615
230	251	-.209	.107	.110	-.603
230	252	-.203	.093	.084	-.560
230	253	-.189	.086	.116	-.504
230	254	-.282	.110	.091	-.701
230	255	-.254	.101	.080	-.612
230	256	-.230	.100	.087	-.581
230	257	-.209	.095	.148	-.540
230	258	-.227	.111	.105	-.658
230	259	-.165	.087	.183	-.482
230	260	-.171	.101	.244	-.558
230	261	-.191	.104	.173	-.570
230	262	-.198	.106	.204	-.569
230	263	-.185	.089	.119	-.521
230	264	-.197	.105	.151	-.705
230	265	-.226	.110	.131	-.702
230	266	-.238	.114	.125	-.649
230	267	-.179	.099	.184	-.565
230	268	-.176	.109	.200	-.733
230	269	-.233	.113	.153	-.712
230	270	-.210	.104	.131	-.602
230	271	-.178	.086	.112	-.505
230	272	-.207	.104	.114	-.567
230	273	-.229	.106	.106	-.627
230	274	-.218	.104	.185	-.616
230	275	-.184	.081	.076	-.488
230	276	-.208	.095	.104	-.576
230	277	-.260	.105	.086	-.672
230	278	-.240	.107	.084	-.747
230	279	-.175	.088	.077	-.613
230	280	-.176	.100	.120	-.624
230	281	-.221	.104	.103	-.607
230	301	-.038	.197	.572	-.843
230	302	-.264	.134	.478	-.959

WD	TAP	CPMEAN	CPRMS	CPMAX	CPMIN
230	303	-.523	.203	.199	-1.476
230	304	-.263	.167	.177	-1.094
230	305	-.460	.187	.083	-1.342
230	306	-.360	.186	.209	-1.145
230	307	-.211	.200	.493	-1.170
230	308	-.189	.114	.308	-.644
230	309	-.255	.130	.220	-.741
230	310	-.423	.175	.108	-1.207
230	311	-.431	.169	.099	-1.451
230	312	-.403	.182	.226	-1.528
230	313	-.471	.189	.074	-1.255
230	314	-.367	.177	.262	-1.097
230	315	-.258	.148	.257	-.793
230	316	-.268	.128	.176	-.853
230	317	-.339	.135	.142	-.927
230	318	-.309	.131	.166	-.863
230	319	-.335	.131	.093	-.837
230	320	-.324	.155	.278	-.922
230	321	-.265	.132	.211	-.785
230	322	-.320	.168	.257	-.911
230	323	-.297	.178	.265	-.986
230	324	-.300	.115	.089	-.940
230	325	-.267	.127	.134	-1.030
230	326	-.337	.133	.076	-1.143
230	327	-.312	.129	.099	-.961
230	328	-.319	.126	.078	-.814
230	329	-.272	.141	.296	-.788
230	330	-.331	.161	.205	-1.141
230	331	-.305	.173	.249	-1.216
230	332	-.358	.143	.148	-1.083
230	333	-.287	.130	.184	-.728
230	334	-.358	.139	.142	-.816
230	335	-.335	.142	.180	-.912
230	336	-.379	.145	.048	-1.030
230	337	-.407	.169	.068	-1.308
230	338	-.336	.155	.158	-.923
230	339	-.283	.142	.143	-1.088
230	340	-.081	.168	.468	-.744
230	341	-.350	.153	.071	-1.261
230	342	-.348	.116	-.022	-.836
230	343	-.328	.127	.039	-.884
230	344	-.294	.126	.056	-1.023
230	345	-.324	.124	-.006	-1.039
230	346	-.272	.104	.045	-.774
230	347	-.214	.115	.320	-.670
230	348	-.186	.119	.195	-.871
230	349	-.348	.162	.118	-1.069
230	350	-.345	.166	.109	-1.247
230	351	-.335	.168	.058	-1.416
230	352	-.245	.131	.116	-.762

WD	TAP	CPMEAN	CPRMS	CPMAX	CPMIN
230	353	-.256	.122	.163	-.822
230	354	-.214	.109	.143	-.750
230	355	-.227	.122	.142	-.766
230	356	-.201	.121	.263	-.627
230	357	-.245	.118	.179	-.794
230	358	-.248	.104	.100	-.638
230	359	-.245	.115	.123	-.759
230	360	-.203	.115	.134	-.657
230	361	-.225	.127	.208	-.971
230	362	-.172	.117	.208	-.620
230	363	-.190	.101	.131	-.575
230	364	-.233	.113	.109	-.738
230	365	-.228	.110	.127	-.671
230	366	-.216	.097	.098	-.571
230	401	-.344	.154	.310	-1.045
230	402	-.339	.244	.623	-1.223
230	403	-.231	.162	.331	-1.022
230	404	.034	.111	.513	-.306
230	405	.152	.154	.791	-.389
230	406	.196	.186	.860	-.631
230	407	.135	.186	.878	-.666
230	408	.128	.155	.672	-.454
230	409	.351	.152	.902	-.145
230	410	.381	.162	.984	-.099
230	411	.348	.167	.975	-.128
230	412	.389	.169	.986	-.124
230	413	.406	.180	.990	-.129
230	414	.015	.133	.432	-.539
230	415	.345	.169	.946	-.173
230	416	.400	.181	1.017	-.082
230	417	.446	.176	1.089	-.045
230	418	.447	.155	1.042	-.032
230	419	.454	.166	1.126	-.046
230	420	.302	.162	.895	-.185
230	421	.200	.146	.824	-.253
230	422	-.047	.148	.414	-.641
230	423	.188	.151	.768	-.267
230	424	.261	.143	.762	-.120
230	425	.313	.148	.887	-.159
230	426	.265	.155	.892	-.216
230	427	.285	.153	.908	-.179
230	428	.213	.134	.670	-.193
230	429	.122	.134	.598	-.312
230	430	-.131	.179	.499	-.844
230	431	.130	.147	.823	-.307
230	432	.218	.122	.805	-.119
230	433	.274	.132	.889	-.079
230	434	.204	.141	.850	-.177
230	435	.248	.147	1.023	-.119
230	436	.149	.111	.568	-.166

APPENDIX A -- PRESSURE DATA:

BASS BROTHERS BUILDING - PHASE II, DALLAS

WD	TAP	CPMEAN	CPRMS	CPMAX	CPMIN
230	437	.049	.124	.573	-.377
230	438	-.051	.140	.380	-.609
230	439	.026	.116	.481	-.467
230	440	-.005	.113	.410	-.435
230	441	-.019	.110	.356	-.403
230	442	.041	.130	.569	-.451
230	443	.143	.143	.678	-.358
230	444	.146	.119	.563	-.258
230	445	.142	.113	.574	-.270
230	446	.094	.134	.580	-.354
230	447	.077	.143	.655	-.407
230	448	-.003	.134	.570	-.448
230	449	-.070	.101	.423	-.427
230	450	-.072	.144	.482	-.715
230	451	.217	.131	.827	-.328
230	452	.132	.120	.640	-.276
230	453	.035	.126	.530	-.432
230	454	-.108	.130	.485	-.571
230	455	.179	.116	.589	-.153
230	456	.051	.121	.500	-.362
230	457	-.162	.115	.203	-.583
230	458	-.137	.108	.216	-.523
230	459	.079	.102	.565	-.348
230	460	.087	.110	.518	-.235
230	461	-.040	.106	.313	-.470
230	801	-.306	.163	.176	-.998
230	802	-.331	.160	.090	-1.176
230	803	-.231	.139	.179	-.813
230	804	-.171	.095	.204	-.529
230	805	-.076	.112	.307	-.552
230	806	-.135	.121	.242	-.617
230	807	-.131	.123	.333	-.608
230	808	-.224	.102	.099	-.588
230	809	-.209	.111	.150	-.631
230	810	-.175	.110	.177	-.664
230	901	-.340	.142	.073	-.996
230	902	-.297	.138	.112	-1.191
230	903	-.163	.170	.494	-.882
230	904	-.173	.164	.381	-.788
230	905	-.481	.152	-.056	-1.187
230	906	-.350	.145	.094	-1.029
230	907	-.487	.184	-.052	-1.406
230	908	-.269	.119	.132	-.742
230	909	-.363	.123	-.023	-1.095
230	910	-.202	.133	.267	-.857
230	911	-.407	.145	.065	-1.132
230	912	-.317	.136	.102	-.809
230	913	-.171	.118	.225	-.683
240	101	-.367	.141	.106	-1.003
240	102	-.244	.141	.267	-.834
240	103	-.204	.171	.442	-.825
240	104	-.225	.187	.535	-.854
240	105	-.259	.175	.595	-.973
240	106	.006	.130	.415	-.544
240	107	.093	.141	.550	-.485
240	108	-.464	.179	.038	-1.129
240	109	-.345	.122	.055	-.819
240	110	-.350	.132	.190	-.765
240	111	-.336	.138	.166	-1.373
240	112	-.436	.174	.084	-1.216
240	113	-.244	.120	.144	-.793
240	114	-.246	.146	.373	-.844
240	115	-.273	.141	.418	-.966
240	116	-.268	.122	.301	-.737
240	117	-.247	.127	.315	-.824
240	118	-.292	.137	.290	-.828
240	119	-.327	.139	.205	-.791
240	120	-.355	.139	.114	-.991
240	121	-.342	.127	.059	-.885
240	122	-.341	.125	.140	-.843
240	123	-.338	.134	.089	-1.163
240	124	-.294	.169	.211	-1.211
240	125	-.320	.165	.248	-1.042
240	126	-.304	.120	.090	-.892
240	127	-.306	.140	.162	-.910
240	128	-.303	.129	.100	-.863
240	129	-.331	.130	.079	-.884
240	130	-.330	.114	-.002	-.843
240	131	-.335	.183	.097	-1.411
240	132	-.331	.156	.270	-1.126
240	133	-.299	.124	.082	-.808
240	134	-.312	.118	.076	-.744
240	135	-.322	.112	.010	-1.101
240	136	-.313	.123	.071	-.996
240	137	-.297	.120	.094	-.900
240	138	-.312	.115	.091	-.900
240	139	-.327	.119	.021	-.811
240	140	-.313	.175	.288	-1.237
240	141	-.316	.160	.292	-.991
240	142	-.340	.146	.204	-1.106
240	143	-.347	.131	.138	-.822
240	144	-.373	.125	.054	-.955
240	145	-.374	.140	.074	-1.121
240	146	-.351	.129	.066	-.924
240	147	-.368	.125	.043	-.866
240	148	-.359	.123	-.044	-1.059
240	149	-.257	.139	.217	-.944
240	150	-.218	.158	.455	-.802
240	151	-.264	.123	.157	-.822
240	152	-.301	.153	.288	-1.019
240	153	-.435	.163	.062	-1.341
240	154	-.425	.157	.041	-1.400
240	155	-.440	.155	.016	-1.297
240	156	-.288	.114	.156	-.796
240	157	-.145	.187	.596	-.950
240	158	-.212	.185	.499	-.785
240	159	-.176	.163	.457	-.743
240	160	-.305	.136	.159	-.856
240	161	-.467	.174	.031	-1.292
240	162	-.474	.173	.022	-1.349
240	163	-.479	.161	-.015	-1.188
240	164	-.486	.144	-.079	-1.178
240	165	-.248	.134	.127	-.965
240	166	-.118	.115	.286	-.487
240	167	-.077	.120	.355	-.470
240	168	-.061	.096	.363	-.468
240	169	-.155	.117	.315	-.664
240	170	-.321	.159	.187	-1.194
240	171	-.445	.194	.518	-1.412
240	172	-.460	.167	-.006	-1.323
240	173	-.518	.216	.014	-1.492
240	174	-.196	.113	.262	-.598
240	176	-.338	.115	.021	-.841
240	177	-.251	.119	.092	-.743
240	178	-.199	.111	.200	-.726
240	179	-.216	.114	.139	-.698
240	180	-.302	.129	.087	-.957
240	181	-.345	.169	.268	-1.287
240	182	-.321	.125	.099	-.928
240	183	-.162	.100	.283	-.530
240	184	-.065	.088	.226	-.382
240	185	-.165	.117	.241	-.615
240	186	-.272	.116	.106	-.748
240	187	-.311	.139	.093	-.976
240	188	-.129	.077	.118	-.398
240	189	-.056	.092	.311	-.332
240	190	.015	.121	.498	-.344
240	191	-.254	.105	.035	-.752
240	192	-.205	.090	.105	-.551
240	193	-.232	.107	.136	-.660
240	194	-.278	.113	.113	-.751
240	195	-.138	.096	.209	-.515
240	196	-.023	.080	.282	-.264
240	197	-.016	.099	.332	-.305
240	198	-.142	.130	.433	-.671
240	201	-.248	.138	.218	-.837
240	202	-.237	.132	.189	-.802
240	203	-.226	.120	.220	-.867
240	204	-.223	.108	.143	-.596
240	205	-.215	.126	.236	-.679

APPENDIX A -- PRESSURE DATA: BASS BROTHERS BUILDING - PHASE II, DALLAS

WD	TAP	CPMEAN	CPRMS	CPMAX	CPMIN
240	206	-.212	.127	.234	-.694
240	207	-.234	.131	.222	-.753
240	208	-.252	.117	.132	-.729
240	209	-.228	.119	.160	-.755
240	210	-.207	.113	.159	-.723
240	211	-.229	.117	.163	-.656
240	212	-.220	.104	.185	-.643
240	213	-.222	.116	.226	-.742
240	214	-.230	.123	.228	-.732
240	215	-.244	.130	.231	-.779
240	216	-.162	.094	.125	-.515
240	217	-.197	.103	.146	-.562
240	218	-.142	.107	.241	-.569
240	219	-.264	.127	.140	-.954
240	220	-.261	.121	.178	-.676
240	221	-.182	.100	.147	-.702
240	222	-.205	.112	.154	-.914
240	223	-.251	.118	.159	-.652
240	224	-.265	.125	.216	-.833
240	225	-.189	.092	.148	-.505
240	226	-.185	.095	.145	-.466
240	227	-.219	.097	.136	-.511
240	228	-.210	.096	.104	-.511
240	229	-.182	.086	.157	-.485
240	230	-.280	.120	.116	-.761
240	231	-.274	.113	.151	-.729
240	232	-.272	.110	.117	-.724
240	233	-.245	.113	.059	-.816
240	234	-.206	.100	.090	-.584
240	235	-.242	.098	.046	-.592
240	236	-.209	.094	.073	-.537
240	237	-.180	.092	.196	-.533
240	238	-.191	.100	.181	-.584
240	239	-.234	.095	.021	-.570
240	240	-.260	.116	.121	-.728
240	241	-.232	.102	.128	-.573
240	242	-.255	.107	.112	-.632
240	243	-.263	.109	.135	-.680
240	244	-.244	.111	.158	-.706
240	245	-.243	.098	.103	-.638
240	247	-.216	.105	.094	-.644
240	248	-.290	.128	.205	-.785
240	249	-.236	.094	.108	-.653
240	250	-.234	.102	.154	-.616
240	251	-.231	.111	.072	-.678
240	252	-.232	.098	.139	-.536
240	253	-.205	.101	.101	-.532
240	254	-.294	.123	.077	-.703
240	255	-.266	.117	.089	-.643
240	256	-.241	.115	.109	-.603

WD	TAP	CPMEAN	CPRMS	CPMAX	CPMIN
240	257	-.199	.096	.112	-.613
240	258	-.261	.123	.190	-.863
240	259	-.202	.093	.069	-.602
240	260	-.211	.105	.136	-.701
240	261	-.232	.108	.165	-.735
240	262	-.245	.110	.157	-.704
240	263	-.200	.089	.100	-.521
240	264	-.213	.103	.143	-.611
240	265	-.243	.109	.135	-.669
240	266	-.251	.113	.175	-.698
240	267	-.191	.097	.141	-.569
240	268	-.194	.105	.150	-.536
240	269	-.260	.113	.100	-.678
240	270	-.248	.113	.162	-.757
240	271	-.211	.085	.143	-.522
240	272	-.253	.111	.101	-.712
240	273	-.275	.110	.107	-.738
240	274	-.257	.104	.174	-.634
240	275	-.205	.095	.086	-.722
240	276	-.233	.112	.103	-.786
240	277	-.283	.116	.078	-.777
240	278	-.267	.123	.102	-.891
240	279	-.214	.097	.162	-.560
240	280	-.217	.106	.148	-.566
240	281	-.270	.116	.083	-.717
240	301	-.241	.150	.510	-.879
240	302	-.288	.148	.233	-1.033
240	303	-.496	.170	.013	-1.334
240	304	-.224	.164	.247	-.916
240	305	-.318	.153	.099	-1.311
240	306	-.335	.159	.096	-1.136
240	307	-.331	.156	.240	-1.209
240	308	-.225	.136	.265	-.794
240	309	-.321	.161	.265	-.998
240	310	-.309	.137	.253	-.841
240	311	-.298	.125	.050	-.832
240	312	-.275	.138	.101	-.874
240	313	-.358	.157	.050	-1.155
240	314	-.341	.162	.084	-1.131
240	315	-.297	.135	.083	-.784
240	316	-.221	.126	.160	-.746
240	317	-.306	.135	.138	-.898
240	318	-.263	.131	.145	-.795
240	319	-.268	.111	.024	-.665
240	320	-.255	.130	.082	-.813
240	321	-.270	.125	.108	-.821
240	322	-.368	.166	.156	-1.147
240	323	-.331	.176	.136	-1.420
240	324	-.272	.114	.081	-.980
240	325	-.241	.124	.172	-1.002

WD	TAP	CPMEAN	CPRMS	CPMAX	CPMIN
240	326	-.329	.131	.120	-1.144
240	327	-.290	.125	.138	-.807
240	328	-.316	.123	.046	-.946
240	329	-.295	.138	.290	-1.154
240	330	-.402	.166	.178	-1.150
240	331	-.372	.178	.182	-1.234
240	332	-.334	.146	.041	-1.215
240	333	-.259	.132	.210	-1.014
240	334	-.346	.142	.164	-1.088
240	335	-.309	.145	.157	-1.083
240	336	-.299	.129	.065	-.988
240	337	-.385	.169	.003	-1.064
240	338	-.367	.141	.086	-.910
240	339	-.322	.135	.070	-.997
240	340	-.221	.185	.347	-.903
240	341	-.364	.142	.069	-1.158
240	342	-.344	.131	.128	-.850
240	343	-.335	.146	.153	-.914
240	344	-.350	.150	.114	-.990
240	345	-.345	.148	.153	-.931
240	346	-.304	.126	.219	-.976
240	347	-.268	.135	.269	-1.186
240	348	-.290	.152	.119	-1.322
240	349	-.345	.168	.033	-1.243
240	350	-.343	.179	.053	-1.463
240	351	-.307	.168	.230	-1.165
240	352	-.299	.152	.131	-1.054
240	353	-.280	.136	.127	-.794
240	354	-.257	.122	.075	-.998
240	355	-.254	.141	.133	-.918
240	356	-.272	.132	.214	-.782
240	357	-.282	.126	.103	-.852
240	358	-.260	.107	.081	-.752
240	359	-.259	.120	.124	-.789
240	360	-.269	.124	.149	-.785
240	361	-.248	.131	.159	-.871
240	362	-.198	.114	.219	-.631
240	363	-.205	.108	.176	-.613
240	364	-.303	.122	.101	-.700
240	365	-.252	.120	.114	-.735
240	366	-.258	.102	.044	-.635
240	401	-.376	.154	.429	-.843
240	402	-.345	.210	.657	-.932
240	403	-.189	.146	.448	-.730
240	404	.032	.123	.464	-.323
240	405	.144	.146	.611	-.390
240	406	.194	.161	.747	-.316
240	407	.123	.164	.729	-.401
240	408	.179	.167	.791	-.348
240	409	.388	.145	.383	-.132

APPENDIX A -- PRESSURE DATA:

BASS BROTHERS BUILDING - PHASE II, DALLAS

WD	TAP	CPMEAN	CPRMS	CPMAX	CPMIN
240	410	.410	.149	1.003	-.100
240	411	.370	.156	.982	-.158
240	412	.419	.154	.998	-.058
240	413	.445	.165	1.093	-.057
240	414	.068	.135	.676	-.813
240	415	.381	.160	.878	-.098
240	416	.402	.165	.910	-.073
240	417	.446	.158	.942	-.042
240	418	.478	.154	1.016	.062
240	419	.479	.162	1.073	.053
240	420	.305	.162	.898	-.125
240	421	.208	.143	.733	-.180
240	422	.021	.152	.644	-.630
240	423	.278	.169	.921	-.297
240	424	.310	.128	.792	-.065
240	425	.370	.135	.859	-.004
240	426	.309	.143	.822	-.102
240	427	.322	.139	.824	-.046
240	428	.219	.131	.719	-.273
240	429	.120	.135	.684	-.374
240	430	-.064	.184	.559	-.818
240	431	.198	.154	.813	-.348
240	432	.270	.118	.645	-.098
240	433	.319	.122	.723	-.055
240	434	.231	.123	.683	-.182
240	435	.270	.128	.667	-.286
240	436	.112	.096	.505	-.236
240	437	.016	.114	.505	-.475
240	438	-.031	.154	.563	-.763
240	439	-.008	.124	.384	-.498
240	440	-.013	.118	.363	-.493
240	441	-.033	.101	.362	-.388
240	442	.034	.123	.627	-.463
240	443	.125	.139	.718	-.411
240	444	.161	.113	.660	-.268
240	445	.131	.099	.538	-.321
240	446	.052	.120	.616	-.418
240	447	-.013	.144	.631	-.513
240	448	-.048	.132	.529	-.530
240	449	-.052	.097	.290	-.436
240	450	-.083	.126	.433	-.666
240	451	.162	.118	.582	-.242
240	452	.134	.109	.581	-.184
240	453	.009	.112	.606	-.360
240	454	-.137	.134	.288	-.612
240	455	.152	.116	.598	-.184
240	456	.033	.109	.632	-.317
240	457	-.172	.116	.182	-.668
240	458	-.135	.114	.204	-.587
240	459	.049	.106	.410	-.283

WD	TAP	CPMEAN	CPRMS	CPMAX	CPMIN
240	460	.099	.114	.489	-.269
240	461	-.040	.100	.303	-.437
240	801	-.279	.144	.132	-.937
240	802	-.394	.154	.066	-1.124
240	803	-.212	.124	.157	-.859
240	804	-.169	.097	.187	-.494
240	805	-.073	.105	.291	-.444
240	806	-.180	.121	.216	-.668
240	807	-.116	.116	.287	-.491
240	808	-.261	.102	.063	-.724
240	809	-.237	.112	.081	-.696
240	810	-.250	.115	.087	-.724
240	901	-.363	.169	.083	-1.095
240	902	-.302	.139	.048	-1.322
240	903	-.229	.149	.373	-.803
240	904	-.262	.126	.132	-.749
240	905	-.458	.146	-.031	-1.023
240	906	-.351	.140	.185	-.889
240	907	-.551	.199	.051	-1.874
240	908	-.296	.119	.124	-.769
240	909	-.379	.120	.088	-.825
240	910	-.226	.142	.256	-.921
240	911	-.429	.146	.062	-.969
240	912	-.301	.157	.327	-1.020
240	913	-.178	.127	.373	-.642
250	101	-.396	.143	.101	-1.008
250	102	-.316	.151	.137	-1.048
250	103	-.084	.179	.624	-.792
250	104	-.055	.226	.739	-.906
250	105	-.157	.221	.762	-.795
250	106	.050	.141	.667	-.394
250	107	.168	.150	.806	-.331
250	108	-.591	.213	.023	-1.714
250	109	-.350	.134	.125	-.748
250	110	-.388	.131	.006	-.847
250	111	-.389	.136	.110	-.869
250	112	-.575	.185	-.021	-1.245
250	113	-.264	.131	.136	-.842
250	114	-.171	.183	.713	-.972
250	115	-.173	.201	.779	-.871
250	116	-.230	.146	.421	-.896
250	117	-.240	.133	.211	-.834
250	118	-.279	.154	.247	-.910
250	119	-.306	.181	.417	-1.127
250	120	-.382	.166	.301	-1.089
250	121	-.415	.141	.176	-.918
250	122	-.419	.173	.303	-1.298
250	123	-.384	.159	.039	-1.194
250	124	-.274	.164	.301	-1.020
250	125	-.253	.208	.570	-.966

WD	TAP	CPMEAN	CPRMS	CPMAX	CPMIN
250	126	-.308	.159	.337	-1.016
250	127	-.326	.177	.555	-.906
250	128	-.396	.149	.151	-1.026
250	129	-.422	.149	.186	-.981
250	130	-.382	.138	.068	-.991
250	131	-.310	.175	.192	-1.140
250	132	-.304	.176	.400	-1.001
250	133	-.320	.135	.371	-.810
250	134	-.314	.140	.196	-.795
250	135	-.377	.134	.099	-1.028
250	136	-.397	.154	.116	-1.202
250	137	-.350	.143	.120	-1.149
250	138	-.367	.131	.016	-1.050
250	139	-.369	.119	.020	-.819
250	140	-.313	.155	.187	-1.048
250	141	-.309	.165	.505	-1.033
250	142	-.352	.150	.286	-.971
250	143	-.361	.133	.232	-.867
250	144	-.407	.143	.026	-.982
250	145	-.430	.157	.009	-1.271
250	146	-.381	.139	.005	-1.051
250	147	-.404	.135	.023	-.985
250	148	-.380	.120	.003	-.864
250	149	-.278	.146	.213	-.972
250	150	-.162	.186	.439	-.885
250	151	-.264	.133	.274	-.703
250	152	-.322	.169	.374	-.931
250	153	-.504	.171	.132	-1.365
250	154	-.477	.160	-.031	-1.390
250	155	-.495	.160	-.016	-1.333
250	156	-.286	.115	.092	-.921
250	157	-.064	.171	.619	-.756
250	158	-.171	.188	.708	-.795
250	159	-.130	.156	.498	-.651
250	160	-.261	.149	.212	-.843
250	161	-.526	.172	-.019	-1.164
250	162	-.523	.166	-.007	-1.190
250	163	-.524	.156	-.053	-1.075
250	164	-.484	.144	-.103	-1.193
250	165	-.254	.123	.131	-.736
250	166	-.123	.111	.267	-.565
250	167	-.074	.121	.424	-.472
250	168	-.063	.090	.308	-.390
250	169	-.144	.105	.210	-.619
250	170	-.301	.149	.204	-1.037
250	171	-.437	.189	.051	-1.215
250	172	-.490	.162	.034	-1.249
250	173	-.564	.193	-.069	-1.649
250	174	-.183	.110	.202	-.630
250	176	-.363	.122	.039	-.822

APPENDIX A -- PRESSURE DATA:

BASS BROTHERS BUILDING - PHASE II, DALLAS

WD	TAP	CPMEAN	CPRMS	CPMAX	CPMIN
250	177	-.262	.121	.142	-.834
250	178	-.202	.114	.248	-.611
250	179	-.219	.112	.146	-.595
250	180	-.310	.127	.082	-.862
250	181	-.336	.177	.166	-1.006
250	182	-.337	.135	.070	-.888
250	183	-.175	.106	.211	-.522
250	184	-.075	.090	.250	-.388
250	185	-.155	.108	.228	-.574
250	186	-.275	.108	.044	-.675
250	187	-.314	.126	.009	-.758
250	188	-.133	.079	.149	-.405
250	189	-.054	.096	.246	-.389
250	190	.029	.125	.492	-.340
250	191	-.260	.104	.073	-.628
250	192	-.208	.085	.084	-.562
250	193	-.230	.102	.112	-.683
250	194	-.276	.108	.087	-.755
250	195	-.140	.096	.215	-.485
250	196	-.041	.081	.259	-.317
250	197	-.023	.099	.443	-.351
250	198	-.159	.126	.256	-.631
250	201	-.255	.125	.183	-.792
250	202	-.230	.117	.196	-.694
250	203	-.246	.114	.119	-.616
250	204	-.225	.101	.117	-.698
250	205	-.249	.122	.134	-.875
250	206	-.228	.114	.151	-.615
250	207	-.247	.117	.141	-.657
250	208	-.249	.121	.181	-.763
250	209	-.263	.127	.159	-.774
250	210	-.236	.122	.185	-.742
250	211	-.265	.136	.097	-.761
250	212	-.233	.105	.102	-.641
250	213	-.258	.116	.097	-.722
250	214	-.256	.119	.116	-.697
250	215	-.295	.133	.138	-.798
250	216	-.202	.098	.117	-.530
250	217	-.240	.109	.120	-.592
250	218	-.170	.114	.239	-.543
250	219	-.295	.128	.088	-.743
250	220	-.286	.127	.142	-.768
250	221	-.215	.110	.162	-.669
250	222	-.234	.123	.196	-.726
250	223	-.278	.123	.084	-.766
250	224	-.267	.123	.135	-.778
250	225	-.233	.103	.089	-.708
250	226	-.228	.109	.146	-.614
250	227	-.263	.111	.094	-.610
250	228	-.255	.113	.097	-.653

WD	TAP	CPMEAN	CPRMS	CPMAX	CPMIN
250	229	-.221	.101	.120	-.598
250	230	-.291	.128	.113	-.811
250	231	-.314	.130	.092	-.877
250	232	-.297	.120	.088	-.738
250	233	-.233	.104	.158	-.683
250	234	-.227	.108	.113	-.587
250	235	-.273	.109	.101	-.629
250	236	-.236	.104	.147	-.607
250	237	-.212	.102	.077	-.615
250	238	-.215	.108	.115	-.652
250	239	-.255	.090	.098	-.596
250	240	-.290	.122	.077	-.742
250	241	-.275	.114	.128	-.994
250	242	-.296	.120	.097	-.776
250	243	-.303	.119	.107	-.829
250	244	-.278	.120	.144	-.848
250	245	-.279	.104	.070	-.683
250	247	-.224	.100	.147	-.606
250	248	-.292	.123	.174	-.742
250	249	-.264	.106	.096	-.610
250	250	-.264	.114	.131	-.640
250	251	-.231	.100	.140	-.561
250	252	-.276	.112	.161	-.780
250	253	-.235	.098	.052	-.584
250	254	-.334	.121	.035	-.827
250	255	-.296	.114	.024	-.689
250	256	-.267	.112	.037	-.644
250	257	-.234	.106	.117	-.608
250	258	-.255	.118	.101	-.958
250	259	-.214	.093	.072	-.596
250	260	-.221	.104	.099	-.650
250	261	-.240	.105	.102	-.650
250	262	-.253	.106	.092	-.677
250	263	-.199	.085	.049	-.521
250	264	-.208	.100	.098	-.590
250	265	-.241	.106	.083	-.671
250	266	-.258	.117	.095	-.956
250	267	-.212	.090	.136	-.541
250	268	-.202	.099	.152	-.515
250	269	-.264	.106	.087	-.698
250	270	-.243	.105	.129	-.593
250	271	-.215	.086	.131	-.507
250	272	-.237	.105	.098	-.619
250	273	-.276	.114	.196	-.799
250	274	-.258	.104	.140	-.600
250	275	-.216	.096	.100	-.570
250	276	-.233	.111	.134	-.609
250	277	-.275	.115	.104	-.726
250	278	-.274	.120	.100	-.825
250	279	-.210	.092	.100	-.553

WD	TAP	CPMEAN	CPRMS	CPMAX	CPMIN
250	280	-.216	.105	.132	-.594
250	281	-.261	.110	.075	-.802
250	301	-.270	.147	.445	-1.089
250	302	-.321	.154	.266	-.986
250	303	-.459	.161	.180	-1.090
250	304	-.297	.145	.133	-.828
250	305	-.255	.118	.146	-.866
250	306	-.243	.116	.154	-.795
250	307	-.245	.110	.102	-.930
250	308	-.191	.111	.155	-.585
250	309	-.314	.132	.067	-.867
250	310	-.225	.107	.166	-.623
250	311	-.229	.099	.106	-.582
250	312	-.193	.106	.155	-.568
250	313	-.296	.114	.063	-.685
250	314	-.241	.110	.095	-.602
250	315	-.257	.105	.106	-.768
250	316	-.183	.103	.170	-.598
250	317	-.297	.113	.086	-.759
250	318	-.236	.108	.120	-.670
250	319	-.229	.102	.127	-.639
250	320	-.199	.113	.193	-.647
250	321	-.195	.107	.164	-.780
250	322	-.347	.147	.152	-1.172
250	323	-.290	.150	.171	-1.120
250	324	-.220	.106	.108	-.822
250	325	-.178	.114	.187	-.814
250	326	-.294	.124	.095	-.967
250	327	-.238	.117	.140	-.882
250	328	-.259	.107	.122	-.682
250	329	-.236	.120	.204	-.753
250	330	-.371	.156	.086	-1.439
250	331	-.319	.163	.154	-1.623
250	332	-.266	.122	.069	-.788
250	333	-.211	.120	.110	-.894
250	334	-.329	.132	.039	-.994
250	335	-.267	.129	.111	-1.227
250	336	-.280	.125	.045	-.936
250	337	-.317	.143	.150	-1.213
250	338	-.323	.124	.063	-.815
250	339	-.328	.141	.048	-1.253
250	340	-.219	.153	.272	-.835
250	341	-.278	.126	.133	-1.051
250	342	-.235	.119	.034	-1.084
250	343	-.262	.133	.082	-1.267
250	344	-.267	.132	.080	-1.186
250	345	-.285	.141	.052	-1.322
250	346	-.305	.116	.049	-.866
250	347	-.278	.133	.078	-1.048
250	348	-.292	.151	.132	-1.176

APPENDIX A -- PRESSURE DATA: BASS BROTHERS BUILDING - PHASE II, DALLAS

WD	TAP	CPMEAN	CPRMS	CPMAX	CPMIN
250	349	-.292	.145	.127	-.920
250	350	-.280	.146	.124	-.997
250	351	-.257	.139	.105	-1.104
250	352	-.263	.138	.107	-.966
250	353	-.269	.129	.115	-.967
250	354	-.277	.121	.067	-1.520
250	355	-.231	.130	.172	-.751
250	356	-.228	.124	.184	-.772
250	357	-.253	.122	.158	-.841
250	358	-.267	.107	.050	-.666
250	359	-.253	.117	.083	-.690
250	360	-.244	.125	.083	-.791
250	361	-.253	.134	.101	-1.216
250	362	-.201	.112	.100	-.648
250	363	-.196	.101	.133	-.555
250	364	-.290	.118	.083	-.751
250	365	-.241	.112	.153	-.692
250	366	-.265	.103	.086	-.660
250	401	-.359	.180	.464	-1.059
250	402	-.375	.267	1.179	-1.101
250	403	-.170	.171	.679	-.679
250	404	.050	.129	.521	-.370
250	405	.145	.162	.679	-.351
250	406	.153	.157	.797	-.354
250	407	.071	.156	.636	-.422
250	408	.229	.180	.888	-.388
250	409	.392	.155	.960	-.092
250	410	.406	.157	.967	-.062
250	411	.347	.172	.942	-.170
250	412	.398	.166	.999	-.076
250	413	.405	.162	.929	-.049
250	414	.110	.136	.627	-.475
250	415	.431	.169	.919	-.084
250	416	.421	.177	1.000	-.124
250	417	.465	.164	1.024	-.059
250	418	.464	.153	.997	.020
250	419	.454	.154	.961	.000
250	420	.233	.144	.724	-.186
250	421	.150	.123	.594	-.210
250	422	.092	.138	.733	-.406
250	423	.302	.155	.797	-.151
250	424	.347	.143	.861	-.050
250	425	.423	.148	.954	-.092
250	426	.343	.156	.879	-.220
250	427	.347	.142	.810	-.183
250	428	.179	.113	.672	-.138
250	429	.096	.110	.546	-.240
250	430	-.004	.180	.721	-.714
250	431	.255	.170	.918	-.299
250	432	.314	.146	.878	-.100

WD	TAP	CPMEAN	CPRMS	CPMAX	CPMIN
250	433	.360	.148	.898	-.064
250	434	.259	.158	.892	-.180
250	435	.280	.143	.844	-.126
250	436	.106	.095	.470	-.209
250	437	.022	.103	.407	-.340
250	438	.021	.144	.661	-.508
250	439	.038	.122	.486	-.506
250	440	.017	.117	.391	-.432
250	441	-.023	.102	.444	-.351
250	442	.066	.137	.831	-.366
250	443	.174	.148	.997	-.285
250	444	.186	.122	.881	-.185
250	445	.140	.106	.500	-.214
250	446	.032	.109	.442	-.397
250	447	.012	.142	.487	-.700
250	448	-.016	.126	.406	-.566
250	449	-.048	.097	.342	-.364
250	450	-.080	.133	.414	-.543
250	451	.213	.130	.769	-.184
250	452	.157	.110	.548	-.233
250	453	.011	.107	.353	-.480
250	454	-.140	.116	.268	-.535
250	455	.147	.108	.534	-.171
250	456	.038	.110	.368	-.361
250	457	-.187	.105	.189	-.564
250	458	-.117	.106	.258	-.530
250	459	.061	.111	.471	-.310
250	460	.108	.115	.526	-.229
250	461	-.046	.095	.252	-.403
250	801	-.287	.136	.108	-.898
250	802	-.424	.158	.011	-1.224
250	803	-.206	.124	.166	-.742
250	804	-.176	.095	.096	-.590
250	805	-.073	.106	.267	-.503
250	806	-.168	.123	.186	-.742
250	807	-.133	.107	.215	-.475
250	808	-.276	.099	.082	-.662
250	809	-.239	.104	.144	-.641
250	810	-.248	.105	.069	-.895
250	901	-.274	.138	.116	-.991
250	902	-.254	.123	.044	-.979
250	903	-.305	.133	.312	-.758
250	904	-.249	.115	.196	-.701
250	905	-.356	.115	.020	-.892
250	906	-.371	.148	.137	-.917
250	907	-.662	.220	-.124	-1.975
250	908	-.312	.125	.168	-.740
250	909	-.397	.119	-.028	-.798
250	910	-.252	.144	.255	-.913
250	911	-.451	.146	.081	-.990

WD	TAP	CPMEAN	CPRMS	CPMAX	CPMIN
250	912	-.268	.176	.424	-.837
250	913	-.112	.153	.445	-.701
260	101	-.300	.133	.118	-.880
260	102	-.379	.179	.245	-1.057
260	103	-.014	.158	.646	-.771
260	104	.098	.182	.717	-.993
260	105	.114	.210	.910	-.814
260	106	.093	.152	.638	-.385
260	107	.189	.155	.759	-.298
260	108	-.620	.243	.100	-1.786
260	109	-.169	.163	.423	-.771
260	110	-.344	.150	.177	-.877
260	111	-.416	.168	.139	-1.233
260	112	-.583	.199	.063	-1.435
260	113	-.320	.147	.184	-1.013
260	114	-.150	.168	.540	-.807
260	115	-.082	.190	.660	-.800
260	116	-.075	.165	.585	-.685
260	117	-.212	.125	.207	-.759
260	118	-.212	.150	.248	-.870
260	119	-.132	.200	.565	-1.538
260	120	-.280	.216	.378	-1.215
260	121	-.484	.185	.175	-1.189
260	122	-.401	.266	.564	-1.302
260	123	-.667	.338	.170	-2.296
260	124	-.293	.155	.301	-1.207
260	125	-.104	.166	.697	-.783
260	126	-.075	.152	.492	-.735
260	127	-.139	.184	.451	-.752
260	128	-.429	.169	.291	-1.151
260	129	-.463	.169	.156	-1.348
260	130	-.489	.155	-.003	-1.141
260	131	-.313	.144	.230	-.988
260	132	-.260	.163	.331	-.937
260	133	-.233	.138	.371	-.801
260	134	-.319	.143	.207	-.790
260	135	-.363	.134	.069	-.929
260	136	-.460	.153	.137	-1.163
260	137	-.407	.144	.113	-1.104
260	138	-.418	.135	.076	-.993
260	139	-.397	.133	-.002	-.902
260	140	-.293	.142	.149	-1.081
260	141	-.279	.145	.276	-1.075
260	142	-.289	.142	.166	-.906
260	143	-.260	.118	.150	-.794
260	144	-.332	.125	.006	-.854
260	145	-.393	.141	.003	-1.002
260	146	-.344	.129	.067	-.897
260	147	-.357	.124	.067	-.810
260	148	-.296	.105	.113	-.669

APPENDIX A -- PRESSURE DATA: BASS BROTHERS BUILDING - PHASE II, DALLAS

WD	TAP	CPMEAN	CPRMS	CPMAX	CPMIN
260	149	-.287	.130	.166	-1.002
260	150	-.243	.149	.326	-1.019
260	151	-.256	.106	.242	-.701
260	152	-.305	.144	.598	-.905
260	153	-.446	.165	.026	-1.048
260	154	-.417	.155	.027	-.980
260	155	-.431	.154	-.005	-.994
260	156	-.269	.114	.126	-.858
260	157	-.196	.188	.467	-.883
260	158	-.285	.155	.416	-.819
260	159	-.222	.138	.326	-.769
260	160	-.300	.131	.094	-.845
260	161	-.440	.164	.035	-1.299
260	162	-.411	.157	.050	-1.151
260	163	-.427	.150	.022	-1.026
260	164	-.391	.129	.075	-.836
260	165	-.234	.108	.154	-.666
260	166	-.124	.113	.292	-.463
260	167	-.103	.126	.618	-.570
260	168	-.108	.098	.247	-.552
260	169	-.190	.120	.211	-.798
260	170	-.311	.138	.087	-.919
260	171	-.386	.165	.068	-1.233
260	172	-.372	.136	.021	-.943
260	173	-.403	.165	.059	-1.187
260	174	-.182	.121	.363	-.678
260	176	-.334	.110	.018	-.793
260	177	-.235	.100	.159	-.594
260	178	-.195	.103	.206	-.612
260	179	-.220	.105	.181	-.603
260	180	-.274	.112	.084	-.747
260	181	-.308	.174	.303	-1.015
260	182	-.319	.120	.079	-.839
260	183	-.164	.100	.438	-.558
260	184	-.078	.088	.256	-.437
260	185	-.163	.106	.204	-.519
260	186	-.274	.100	.053	-.591
260	187	-.298	.108	.010	-.668
260	188	-.125	.076	.140	-.397
260	189	-.049	.091	.306	-.374
260	190	.013	.122	.523	-.390
260	191	-.248	.092	.085	-.574
260	192	-.198	.079	.034	-.501
260	193	-.216	.096	.066	-.591
260	194	-.264	.101	.034	-.644
260	195	-.127	.093	.145	-.490
260	196	-.031	.078	.240	-.296
260	197	-.013	.095	.307	-.327
260	198	-.129	.140	.371	-.687
260	201	-.274	.112	.096	-.793

WD	TAP	CPMEAN	CPRMS	CPMAX	CPMIN
260	202	-.252	.106	.094	-.667
260	203	-.277	.106	.099	-.618
260	204	-.238	.101	.076	-.610
260	205	-.279	.118	.100	-.920
260	206	-.260	.115	.150	-.692
260	207	-.274	.118	.154	-.691
260	208	-.252	.099	.047	-.815
260	209	-.284	.107	.015	-.842
260	210	-.263	.101	.017	-.747
260	211	-.312	.114	.109	-.757
260	212	-.253	.099	.120	-.649
260	213	-.291	.112	.126	-.722
260	214	-.286	.112	.124	-.701
260	215	-.367	.129	.030	-.817
260	216	-.223	.093	.059	-.694
260	217	-.252	.103	.086	-.778
260	218	-.188	.107	.176	-.667
260	219	-.300	.120	.095	-.909
260	220	-.311	.117	.031	-.778
260	221	-.226	.090	.102	-.556
260	222	-.236	.099	.068	-.599
260	223	-.294	.109	.036	-.753
260	224	-.285	.102	.080	-.640
260	225	-.250	.088	.065	-.547
260	226	-.248	.094	.061	-.568
260	227	-.287	.097	.037	-.595
260	228	-.273	.097	.046	-.603
260	229	-.248	.087	.051	-.641
260	230	-.296	.107	.061	-.795
260	231	-.328	.112	.057	-.880
260	232	-.307	.101	.030	-.787
260	233	-.240	.090	.033	-.603
260	234	-.243	.096	.098	-.588
260	235	-.290	.098	.057	-.684
260	236	-.257	.093	.071	-.620
260	237	-.233	.086	.069	-.564
260	238	-.235	.098	.105	-.644
260	239	-.243	.086	.047	-.576
260	240	-.286	.119	.075	-1.259
260	241	-.271	.102	.057	-.785
260	242	-.263	.100	.095	-.815
260	243	-.297	.104	.032	-.791
260	244	-.275	.105	.065	-.763
260	245	-.250	.096	.071	-.566
260	247	-.231	.096	.112	-.606
260	248	-.256	.110	.110	-.637
260	249	-.250	.097	.050	-.595
260	250	-.253	.106	.078	-.623
260	251	-.271	.104	.120	-.591
260	252	-.253	.100	.093	-.603

WD	TAP	CPMEAN	CPRMS	CPMAX	CPMIN
260	253	-.207	.086	.078	-.490
260	254	-.288	.101	.034	-.683
260	255	-.261	.100	.065	-.586
260	256	-.237	.099	.083	-.568
260	257	-.220	.093	.113	-.589
260	258	-.233	.112	.134	-.748
260	259	-.195	.084	.080	-.532
260	260	-.198	.096	.119	-.574
260	261	-.220	.101	.136	-.589
260	262	-.236	.098	.112	-.581
260	263	-.210	.083	.040	-.497
260	264	-.211	.097	.080	-.579
260	265	-.246	.103	.056	-.638
260	266	-.258	.115	.121	-.711
260	267	-.196	.087	.094	-.538
260	268	-.186	.096	.128	-.599
260	269	-.249	.099	.105	-.640
260	270	-.231	.100	.158	-.565
260	271	-.191	.082	.110	-.478
260	272	-.211	.094	.126	-.526
260	273	-.248	.109	.182	-.670
260	274	-.228	.097	.158	-.535
260	275	-.207	.083	.029	-.532
260	276	-.217	.097	.068	-.601
260	277	-.259	.102	.039	-.666
260	278	-.258	.112	.051	-.737
260	279	-.194	.084	.098	-.480
260	280	-.205	.096	.120	-.525
260	281	-.250	.100	.055	-.599
260	301	-.234	.114	.292	-.702
260	302	-.285	.121	.137	-.752
260	303	-.411	.131	-.002	-.917
260	304	-.344	.122	.022	-.753
260	305	-.230	.103	.123	-.624
260	306	-.227	.105	.143	-.629
260	307	-.232	.093	.084	-.635
260	308	-.182	.098	.151	-.590
260	309	-.312	.112	.073	-.877
260	310	-.224	.097	.142	-.583
260	311	-.225	.091	.088	-.672
260	312	-.180	.097	.151	-.656
260	313	-.291	.105	.063	-.730
260	314	-.226	.099	.096	-.594
260	315	-.230	.086	.089	-.554
260	316	-.162	.092	.164	-.498
260	317	-.286	.102	.077	-.666
260	318	-.218	.096	.123	-.566
260	319	-.222	.085	.067	-.563
260	320	-.178	.091	.145	-.501
260	321	-.178	.090	.105	-.597

APPENDIX A -- PRESSURE DATA: BASS BROTHERS BUILDING - PHASE II, DALLAS

WD	TAP	CPMEAN	CPRMS	CPMAX	CPMIN
260	322	-.324	.108	.053	-.766
260	323	-.256	.105	.102	-.739
260	324	-.208	.088	.098	-.532
260	325	-.157	.094	.171	-.502
260	326	-.284	.103	.038	-.652
260	327	-.219	.097	.086	-.562
260	328	-.235	.093	.094	-.572
260	329	-.200	.101	.154	-.558
260	330	-.333	.121	.059	-.868
260	331	-.267	.118	.119	-.797
260	332	-.249	.108	.104	-.822
260	333	-.179	.106	.212	-.582
260	334	-.306	.116	.142	-.778
260	335	-.238	.110	.178	-.765
260	336	-.259	.102	.041	-.798
260	337	-.304	.132	.105	-1.120
260	338	-.290	.109	.047	-.806
260	339	-.269	.116	.113	-.836
260	340	-.233	.145	.229	-.932
260	341	-.243	.116	.247	-1.021
260	342	-.261	.098	.018	-.617
260	343	-.231	.108	.066	-.658
260	344	-.227	.108	.091	-.681
260	345	-.255	.116	.133	-.915
260	346	-.275	.110	.097	-.800
260	347	-.257	.129	.161	-1.033
260	348	-.261	.145	.106	-1.498
260	349	-.247	.129	.140	-1.162
260	350	-.238	.133	.142	-1.237
260	351	-.240	.113	.070	-.806
260	352	-.248	.130	.117	-1.179
260	353	-.259	.122	.122	-.973
260	354	-.292	.120	.060	-.936
260	355	-.210	.125	.160	-.835
260	356	-.224	.121	.165	-.883
260	357	-.251	.122	.184	-.868
260	358	-.268	.108	.065	-.664
260	359	-.244	.117	.122	-.660
260	360	-.229	.120	.189	-.783
260	361	-.253	.131	.152	-1.046
260	362	-.199	.115	.276	-.669
260	363	-.202	.105	.126	-.520
260	364	-.278	.111	.066	-.662
260	365	-.241	.112	.140	-.658
260	366	-.278	.103	.084	-.683
260	401	-.194	.241	.986	-.903
260	402	-.151	.331	1.075	-1.023
260	403	-.048	.202	.712	-.762
260	404	.116	.143	.634	-.401
260	405	.177	.158	.854	-.298

WD	TAP	CPMEAN	CPRMS	CPMAX	CPMIN
260	406	.124	.150	.706	-.348
260	407	.029	.142	.520	-.446
260	408	.124	.223	1.055	-.899
260	409	.391	.174	1.150	-.196
260	410	.425	.167	1.279	-.049
260	411	.374	.182	1.225	-.163
260	412	.423	.168	1.227	-.101
260	413	.432	.158	1.020	-.054
260	414	-.012	.147	.497	-.805
260	415	.363	.166	.937	-.085
260	416	.375	.175	.954	-.085
260	417	.431	.162	.976	-.013
260	418	.445	.142	.920	-.075
260	419	.430	.140	.991	-.055
260	420	.185	.128	.698	-.273
260	421	.110	.108	.516	-.287
260	422	.054	.153	.539	-.694
260	423	.326	.168	.955	-.450
260	424	.362	.142	.930	-.028
260	425	.458	.150	.941	.034
260	426	.379	.161	.901	-.083
260	427	.372	.143	.857	-.009
260	428	.168	.106	.489	-.238
260	429	.090	.103	.410	-.281
260	430	.012	.172	.786	-.674
260	431	.253	.159	.864	-.295
260	432	.296	.128	.844	-.114
260	433	.348	.130	.869	-.077
260	434	.246	.141	.719	-.205
260	435	.275	.130	.692	-.123
260	436	.133	.101	.478	-.177
260	437	.043	.104	.425	-.293
260	438	.026	.143	.662	-.531
260	439	.050	.122	.594	-.389
260	440	.031	.119	.573	-.396
260	441	-.004	.109	.336	-.382
260	442	.091	.142	.649	-.399
260	443	.222	.150	.849	-.255
260	444	.221	.128	.684	-.227
260	445	.168	.112	.685	-.207
260	446	.051	.121	.582	-.352
260	447	.042	.144	.641	-.501
260	448	.012	.126	.586	-.404
260	449	-.037	.101	.393	-.331
260	450	-.064	.130	.376	-.567
260	451	.214	.129	.789	-.183
260	452	.156	.113	.543	-.233
260	453	.005	.110	.438	-.451
260	454	-.152	.116	.219	-.606
260	455	.186	.106	.642	-.143

WD	TAP	CPMEAN	CPRMS	CPMAX	CPMIN
260	456	.025	.114	.490	-.546
260	457	-.198	.107	.214	-.640
260	458	-.116	.106	.294	-.563
260	459	.077	.105	.448	-.367
260	460	.128	.116	.601	-.355
260	461	-.057	.101	.304	-.443
260	801	-.255	.138	.215	-.716
260	802	-.369	.139	.040	-.910
260	803	-.200	.116	.184	-.612
260	804	-.182	.099	.188	-.551
260	805	-.073	.112	.304	-.470
260	806	-.172	.114	.217	-.609
260	807	-.117	.120	.270	-.559
260	808	-.288	.090	.052	-.586
260	809	-.249	.094	.133	-.573
260	810	-.256	.095	.014	-.589
260	901	-.233	.108	.083	-.611
260	902	-.240	.108	.099	-.815
260	903	-.336	.124	.071	-.929
260	904	-.245	.110	.152	-.659
260	905	-.308	.101	.024	-.747
260	906	-.364	.130	.145	-.802
260	907	-.580	.216	.046	-1.658
260	908	-.321	.113	.074	-.788
260	909	-.329	.133	.185	-.771
260	910	-.282	.147	.199	-.825
260	911	-.389	.157	.204	-1.249
260	912	-.186	.213	.690	-1.089
260	913	-.035	.178	.583	-.566
270	101	-.187	.124	.290	-.623
270	102	-.292	.199	.430	-1.124
270	103	.050	.220	1.010	-.678
270	104	.145	.227	1.010	-.511
270	105	.202	.212	1.092	-.414
270	106	.201	.189	.974	-.453
270	107	.284	.194	1.015	-.564
270	108	-.394	.275	.730	-1.593
270	109	.067	.164	.805	-.461
270	110	-.168	.166	.456	-.851
270	111	-.285	.178	.292	-.976
270	112	-.392	.228	.431	-1.296
270	113	-.258	.155	.385	-.963
270	114	-.154	.167	.506	-.739
270	115	-.103	.160	.652	-.650
270	116	-.049	.153	.608	-.690
270	117	-.198	.127	.282	-.693
270	118	-.202	.157	.363	-.797
270	119	-.089	.177	.617	-.992
270	120	-.147	.170	.614	-.898
270	121	-.287	.175	.550	-.983

APPENDIX A -- PRESSURE DATA: BASS BROTHERS BUILDING - PHASE II, DALLAS

WD	TAP	CPMEAN	CPRMS	CPMAX	CPMIN
270	122	-.362	.242	.475	-1.618
270	123	-.489	.354	.434	-2.460
270	124	-.303	.173	.323	-1.047
270	125	-.143	.156	.645	-.620
270	126	-.046	.136	.485	-.514
270	127	-.065	.168	.635	-.652
270	128	-.375	.168	.211	-1.214
270	129	-.410	.179	.206	-1.312
270	130	-.400	.174	.142	-1.225
270	131	-.300	.135	.160	-1.008
270	132	-.215	.114	.229	-.715
270	133	-.160	.111	.248	-.538
270	134	-.224	.117	.207	-.669
270	135	-.235	.106	.226	-.676
270	136	-.369	.143	.046	-1.061
270	137	-.376	.140	.045	-.960
270	138	-.397	.137	.022	-1.079
270	139	-.339	.141	.133	-1.189
270	140	-.266	.124	.157	-.797
270	141	-.226	.111	.149	-.822
270	142	-.228	.111	.094	-.688
270	143	-.203	.104	.188	-.562
270	144	-.228	.096	.102	-.595
270	145	-.287	.112	.098	-1.072
270	146	-.266	.108	.121	-.742
270	147	-.279	.107	.103	-.658
270	148	-.229	.099	.081	-.598
270	149	-.248	.117	.165	-.770
270	150	-.213	.112	.155	-.616
270	151	-.157	.090	.171	-.624
270	152	-.229	.121	.206	-.691
270	153	-.259	.119	.088	-.776
270	154	-.245	.114	.048	-.727
270	155	-.259	.114	.043	-.723
270	156	-.205	.092	.148	-.537
270	157	-.202	.120	.266	-.665
270	158	-.233	.126	.168	-.677
270	159	-.168	.117	.175	-.595
270	160	-.171	.109	.182	-.763
270	161	-.247	.119	.117	-.806
270	162	-.241	.116	.122	-.680
270	163	-.251	.116	.122	-.670
270	164	-.210	.107	.079	-.861
270	165	-.215	.106	.131	-.672
270	166	-.134	.109	.250	-.529
270	167	-.109	.113	.352	-.489
270	168	-.122	.100	.176	-.686
270	169	-.169	.122	.191	-.732
270	170	-.240	.129	.145	-1.003
270	171	-.263	.142	.187	-.962
270	172	-.231	.113	.125	-.805
270	173	-.260	.145	.161	-1.163
270	174	-.140	.103	.244	-.477
270	176	-.268	.125	.144	-.876
270	177	-.219	.097	.116	-.620
270	178	-.170	.103	.157	-.538
270	179	-.166	.109	.279	-.569
270	180	-.200	.110	.131	-.678
270	181	-.181	.151	.235	-1.125
270	182	-.280	.122	.130	-.766
270	183	-.145	.107	.247	-.575
270	184	-.035	.085	.320	-.351
270	185	-.083	.101	.292	-.460
270	186	-.239	.101	.119	-.590
270	187	-.310	.115	.080	-.679
270	188	-.125	.081	.105	-.356
270	189	-.057	.098	.302	-.374
270	190	-.013	.122	.588	-.412
270	191	-.227	.097	.094	-.533
270	192	-.200	.076	.081	-.474
270	193	-.221	.090	.108	-.542
270	194	-.272	.095	.090	-.605
270	195	-.139	.088	.162	-.443
270	196	-.026	.087	.290	-.358
270	197	-.019	.105	.435	-.399
270	198	-.101	.129	.556	-.719
270	201	-.248	.118	.123	-.877
270	202	-.236	.109	.110	-.673
270	203	-.253	.107	.104	-.588
270	204	-.223	.094	.098	-.544
270	205	-.273	.117	.099	-.649
270	206	-.274	.118	.100	-.695
270	207	-.280	.119	.110	-.719
270	208	-.209	.097	.115	-.575
270	209	-.251	.105	.095	-.769
270	210	-.240	.102	.084	-.639
270	211	-.293	.124	.138	-.836
270	212	-.219	.094	.057	-.545
270	213	-.264	.108	.065	-.634
270	214	-.268	.110	.070	-.673
270	215	-.335	.124	.009	-.739
270	216	-.198	.088	.057	-.481
270	217	-.229	.100	.082	-.612
270	218	-.164	.101	.126	-.563
270	219	-.277	.119	.048	-.802
270	220	-.271	.119	.138	-.674
270	221	-.219	.090	.107	-.565
270	222	-.233	.102	.129	-.618
270	223	-.256	.114	.145	-.662
270	224	-.266	.100	.110	-.655
270	225	-.225	.087	.038	-.573
270	226	-.223	.093	.066	-.584
270	227	-.265	.096	.036	-.658
270	228	-.253	.097	.062	-.690
270	229	-.225	.095	.087	-.516
270	230	-.287	.118	.080	-.767
270	231	-.309	.122	.067	-.944
270	232	-.282	.113	.034	-.793
270	233	-.201	.091	.085	-.507
270	234	-.219	.098	.122	-.595
270	235	-.269	.100	.104	-.621
270	236	-.233	.097	.099	-.548
270	237	-.217	.087	.096	-.519
270	238	-.222	.099	.116	-.646
270	239	-.228	.088	.075	-.630
270	240	-.296	.126	.124	-.933
270	241	-.282	.130	.076	-1.320
270	242	-.238	.108	.130	-.773
270	243	-.292	.120	.049	-1.023
270	244	-.275	.123	.056	-.896
270	245	-.233	.089	.092	-.788
270	247	-.200	.099	.104	-.563
270	248	-.242	.099	.107	-.596
270	249	-.250	.089	.029	-.739
270	250	-.248	.099	.072	-.765
270	251	-.237	.102	.061	-.587
270	252	-.241	.093	.087	-.647
270	253	-.209	.081	.083	-.510
270	254	-.270	.106	.065	-.763
270	255	-.265	.098	.085	-.970
270	256	-.242	.098	.106	-.988
270	257	-.216	.093	.076	-1.051
270	258	-.208	.099	.125	-.512
270	259	-.182	.082	.098	-.514
270	260	-.191	.094	.137	-.483
270	261	-.218	.097	.113	-.533
270	262	-.225	.096	.080	-.549
270	263	-.177	.077	.081	-.487
270	264	-.186	.092	.123	-.591
270	265	-.223	.098	.101	-.651
270	266	-.221	.102	.104	-.608
270	267	-.180	.080	.062	-.446
270	268	-.179	.091	.077	-.462
270	269	-.238	.097	.039	-.563
270	270	-.215	.102	.113	-.554
270	271	-.173	.083	.121	-.471
270	272	-.204	.100	.101	-.563
270	273	-.232	.102	.153	-.610
270	274	-.212	.099	.144	-.558
270	275	-.182	.083	.109	-.498

APPENDIX A -- PRESSURE DATA: BASS BROTHERS BUILDING - PHASE II, DALLAS

WD	TAP	CPMEAN	CPRMS	CPMAX	CPMIN
270	276	-.194	.096	.143	-.575
270	277	-.237	.100	.112	-.656
270	278	-.221	.100	.104	-.634
270	279	-.175	.076	.076	-.468
270	280	-.195	.088	.119	-.530
270	281	-.242	.092	.048	-.610
270	301	-.200	.113	.195	-.606
270	302	-.264	.119	.111	-.908
270	303	-.368	.142	.088	-.919
270	304	-.320	.121	.065	-.724
270	305	-.205	.106	.092	-.563
270	306	-.183	.110	.174	-.655
270	307	-.198	.101	.087	-.773
270	308	-.143	.098	.159	-.495
270	309	-.276	.111	.049	-.664
270	310	-.195	.103	.114	-.775
270	311	-.191	.088	.115	-.500
270	312	-.141	.094	.199	-.482
270	313	-.262	.102	.104	-.609
270	314	-.193	.096	.148	-.533
270	315	-.197	.083	.059	-.503
270	316	-.135	.099	.175	-.804
270	317	-.260	.105	.059	-.832
270	318	-.187	.096	.107	-.579
270	319	-.190	.086	.092	-.501
270	320	-.144	.091	.144	-.477
270	321	-.149	.088	.159	-.438
270	322	-.291	.104	.061	-.711
270	323	-.218	.098	.101	-.594
270	324	-.196	.107	.122	-.906
270	325	-.137	.106	.219	-.597
270	326	-.263	.114	.127	-.690
270	327	-.193	.106	.155	-.579
270	328	-.188	.087	.128	-.506
270	329	-.153	.093	.163	-.434
270	330	-.274	.108	.081	-.647
270	331	-.209	.104	.111	-.572
270	332	-.220	.112	.110	-1.038
270	333	-.143	.096	.195	-.657
270	334	-.273	.107	.112	-.939
270	335	-.202	.102	.154	-.906
270	336	-.202	.093	.122	-.554
270	337	-.254	.109	.110	-.788
270	338	-.222	.094	.054	-.682
270	339	-.221	.100	.099	-.586
270	340	-.228	.159	.308	-.851
270	341	-.207	.108	.160	-.581
270	342	-.238	.090	.055	-.601
270	343	-.210	.100	.108	-.612
270	344	-.206	.099	.112	-.625
270	345	-.227	.100	.101	-.703
270	346	-.249	.096	.065	-.605
270	347	-.233	.111	.112	-.654
270	348	-.235	.118	.110	-.806
270	349	-.222	.114	.137	-.691
270	350	-.208	.113	.151	-.700
270	351	-.217	.110	.132	-.727
270	352	-.227	.118	.133	-.779
270	353	-.239	.113	.101	-.662
270	354	-.246	.100	.161	-.651
270	355	-.194	.111	.145	-.607
270	356	-.191	.111	.287	-.705
270	357	-.211	.111	.247	-.654
270	358	-.240	.101	.126	-.626
270	359	-.220	.109	.170	-.613
270	360	-.208	.109	.188	-.634
270	361	-.226	.117	.166	-.831
270	362	-.188	.112	.203	-.627
270	363	-.192	.109	.194	-.574
270	364	-.238	.113	.168	-.688
270	365	-.214	.113	.178	-.640
270	366	-.238	.092	.070	-.578
270	401	.012	.259	.919	-.873
270	402	.083	.296	.999	-.841
270	403	-.032	.217	.994	-.969
270	404	.116	.180	.845	-.457
270	405	.278	.210	1.133	-.516
270	406	.179	.186	.995	-.443
270	407	.078	.178	.811	-.556
270	408	-.169	.247	.678	-1.402
270	409	.116	.217	.860	-.533
270	410	.228	.215	.947	-.400
270	411	.226	.235	.982	-1.061
270	412	.336	.219	1.047	-.315
270	413	.400	.210	1.066	-.343
270	414	-.316	.194	.340	-1.297
270	415	.050	.207	.841	-.599
270	416	.126	.223	.958	-.428
270	417	.281	.199	.978	-.250
270	418	.327	.191	1.118	-.451
270	419	.398	.193	1.115	-.357
270	420	.224	.177	1.022	-.480
270	421	.152	.144	.747	-.490
270	422	-.193	.170	.354	-.748
270	423	.060	.192	.833	-.537
270	424	.202	.167	.756	-.326
270	425	.298	.168	.994	-.244
270	426	.229	.192	.973	-.460
270	427	.282	.179	.902	-.368
270	428	.190	.141	.647	-.344
270	429	.117	.132	.553	-.517
270	430	-.106	.215	.604	-1.026
270	431	.150	.189	.848	-.523
270	432	.194	.157	.972	-.266
270	433	.261	.167	1.056	-.306
270	434	.185	.179	1.061	-.339
270	435	.223	.175	1.008	-.462
270	436	.123	.123	.552	-.472
270	437	.059	.117	.528	-.373
270	438	.073	.173	.819	-.947
270	439	.079	.143	.685	-.580
270	440	.066	.135	.637	-.562
270	441	.071	.130	.620	-.391
270	442	.145	.155	.800	-.388
270	443	.209	.153	.799	-.406
270	444	.206	.140	.777	-.252
270	445	.101	.114	.581	-.398
270	446	-.007	.117	.415	-.443
270	447	-.002	.140	.529	-.482
270	448	-.015	.127	.457	-.467
270	449	.001	.122	.663	-.449
270	450	.016	.150	.699	-.413
270	451	.165	.135	.669	-.244
270	452	.103	.125	.564	-.296
270	453	-.049	.117	.500	-.424
270	454	-.178	.117	.151	-1.006
270	455	.106	.117	.645	-.241
270	456	-.040	.120	.338	-.466
270	457	-.220	.111	.109	-.867
270	458	-.138	.108	.213	-.543
270	459	.068	.127	.647	-.355
270	460	.095	.128	.705	-.313
270	461	-.100	.094	.213	-.424
270	801	-.182	.121	.181	-.605
270	802	-.242	.145	.186	-.937
270	803	-.147	.105	.186	-.551
270	804	-.185	.095	.133	-.613
270	805	-.102	.110	.285	-.547
270	806	-.200	.127	.193	-.809
270	807	-.076	.116	.357	-.547
270	808	-.267	.100	.072	-.636
270	809	-.218	.105	.123	-.595
270	810	-.217	.105	.121	-.645
270	901	-.219	.099	.125	-.561
270	902	-.189	.091	.081	-.551
270	903	-.237	.136	.258	-.675
270	904	-.119	.124	.271	-.537
270	905	-.273	.132	.318	-.875
270	906	-.317	.150	.242	-.905
270	907	-.306	.278	.531	-1.504

APPENDIX A -- PRESSURE DATA: BASS BROTHERS BUILDING - PHASE II, DALLAS

WD	TAP	CPMEAN	CPRMS	CPMAX	CPMIN
270	908	-.291	.115	.093	-.722
270	909	-.085	.179	.636	-.786
270	910	-.324	.157	.164	-.875
270	911	-.207	.190	.577	-1.388
270	912	-.120	.241	.625	-1.137
270	913	-.084	.174	.662	-.825
280	101	-.066	.142	.591	-.524
280	102	-.219	.182	.401	-1.124
280	103	-.038	.210	.776	-.703
280	104	.021	.228	.963	-.686
280	105	.102	.215	1.056	-.534
280	106	-.038	.226	.845	-.832
280	107	-.020	.255	1.022	-.818
280	108	-.140	.203	.750	-1.068
280	109	.071	.171	.794	-.433
280	110	-.044	.191	.716	-.580
280	111	-.191	.150	.349	-.856
280	112	-.180	.184	.504	-.928
280	113	-.183	.139	.391	-.793
280	114	-.159	.137	.528	-.648
280	115	-.136	.137	.448	-.638
280	116	-.089	.153	.513	-.944
280	117	-.176	.144	.390	-.768
280	118	-.205	.166	.469	-.888
280	119	-.163	.168	.491	-1.158
280	120	-.169	.158	.405	-1.108
280	121	-.190	.155	.459	-.799
280	122	-.207	.138	.397	-.772
280	123	-.198	.180	.701	-.979
280	124	-.228	.148	.412	-.874
280	125	-.181	.132	.383	-.674
280	126	-.086	.115	.342	-.553
280	127	-.125	.142	.385	-.617
280	128	-.242	.131	.212	-.760
280	129	-.256	.128	.177	-.730
280	130	-.210	.118	.195	-.821
280	131	-.229	.124	.213	-.951
280	132	-.197	.111	.168	-.658
280	133	-.138	.110	.217	-.514
280	134	-.180	.112	.180	-.531
280	135	-.155	.094	.106	-.675
280	136	-.229	.104	.097	-.974
280	137	-.239	.104	.061	-.617
280	138	-.264	.106	.111	-.781
280	139	-.275	.127	.172	-.904
280	140	-.222	.114	.185	-.751
280	141	-.189	.112	.212	-.714
280	142	-.179	.115	.229	-.668
280	143	-.172	.104	.239	-.574
280	144	-.162	.095	.115	-.521
280	145	-.260	.116	.103	-.661
280	146	-.275	.116	.083	-.724
280	147	-.290	.115	.093	-.730
280	148	-.233	.104	.116	-.785
280	149	-.210	.115	.376	-.608
280	150	-.174	.103	.284	-.527
280	151	-.128	.084	.154	-.445
280	152	-.187	.109	.278	-.581
280	153	-.294	.125	.126	-.766
280	154	-.316	.128	.037	-.866
280	155	-.324	.127	.029	-.881
280	156	-.157	.098	.284	-.462
280	157	-.148	.108	.330	-.494
280	158	-.165	.114	.299	-.609
280	159	-.110	.106	.355	-.504
280	160	-.119	.093	.140	-.424
280	161	-.233	.118	.139	-.731
280	162	-.373	.148	.051	-1.272
280	163	-.395	.148	.042	-1.141
280	164	-.327	.139	.086	-.983
280	165	-.160	.128	.460	-.636
280	166	-.109	.121	.422	-.578
280	167	-.108	.113	.288	-.531
280	168	-.091	.091	.271	-.505
280	169	-.146	.112	.190	-.731
280	170	-.246	.121	.135	-.930
280	171	-.302	.143	.108	-.995
280	172	-.310	.140	.026	-.869
280	173	-.433	.209	.079	-1.545
280	174	-.135	.106	.278	-.452
280	176	-.201	.123	.182	-.758
280	177	-.190	.105	.130	-.525
280	178	-.156	.107	.245	-.538
280	179	-.149	.109	.222	-.519
280	180	-.192	.105	.156	-.894
280	181	-.164	.133	.293	-.730
280	182	-.204	.106	.141	-.774
280	183	-.128	.097	.199	-.474
280	184	-.071	.085	.226	-.407
280	185	-.102	.103	.269	-.508
280	186	-.201	.103	.125	-.584
280	187	-.226	.112	.113	-.741
280	188	-.108	.078	.176	-.374
280	189	-.091	.092	.247	-.441
280	190	-.100	.104	.271	-.434
280	191	-.209	.093	.158	-.545
280	192	-.181	.084	.100	-.508
280	193	-.193	.101	.133	-.630
280	194	-.255	.113	.096	-.777
280	195	-.148	.094	.134	-.570
280	196	-.083	.080	.172	-.364
280	197	-.085	.095	.206	-.408
280	198	-.153	.122	.317	-.690
280	201	-.203	.118	.201	-.796
280	202	-.202	.111	.145	-1.126
280	203	-.204	.107	.154	-.809
280	204	-.158	.104	.233	-.533
280	205	-.210	.132	.259	-.659
280	206	-.231	.133	.260	-.677
280	207	-.236	.131	.259	-.751
280	208	-.159	.107	.195	-.646
280	209	-.199	.116	.179	-.714
280	210	-.198	.112	.151	-.709
280	211	-.240	.131	.263	-.914
280	212	-.160	.098	.130	-.510
280	213	-.207	.113	.133	-.599
280	214	-.222	.118	.127	-.727
280	215	-.260	.130	.154	-.783
280	216	-.162	.094	.161	-.549
280	217	-.189	.106	.166	-.599
280	218	-.137	.108	.270	-.578
280	219	-.239	.122	.197	-.960
280	220	-.243	.126	.208	-1.168
280	221	-.176	.096	.121	-.638
280	222	-.183	.109	.148	-.744
280	223	-.224	.117	.156	-.737
280	224	-.196	.094	.082	-.741
280	225	-.173	.085	.144	-.492
280	226	-.167	.091	.167	-.507
280	227	-.209	.096	.149	-.552
280	228	-.191	.096	.180	-.512
280	229	-.167	.083	.177	-.433
280	230	-.199	.100	.184	-.627
280	231	-.254	.109	.142	-.830
280	232	-.236	.101	.110	-.832
280	233	-.170	.093	.136	-.482
280	234	-.173	.099	.112	-.576
280	235	-.223	.102	.076	-.578
280	236	-.190	.099	.134	-.498
280	237	-.167	.087	.175	-.477
280	238	-.168	.096	.207	-.496
280	239	-.193	.084	.091	-.508
280	240	-.228	.104	.141	-.631
280	241	-.198	.096	.110	-.889
280	242	-.204	.104	.117	-.596
280	243	-.244	.107	.140	-.705
280	244	-.217	.106	.199	-.718
280	245	-.211	.093	.071	-.665
280	247	-.188	.101	.169	-.644
280	248	-.233	.095	.075	-.559

APPENDIX A -- PRESSURE DATA:

BASS BROTHERS BUILDING - PHASE II, DALLAS

WD	TAP	CPMEAN	CPRMS	CPMAX	CPMIN
280	249	-.207	.094	.061	-.594
280	250	-.205	.103	.090	-.607
280	251	-.231	.099	.162	-.622
280	252	-.210	.098	.063	-.557
280	253	-.178	.087	.137	-.498
280	254	-.251	.107	.112	-.616
280	255	-.239	.104	.135	-.627
280	256	-.213	.102	.156	-.615
280	257	-.182	.087	.125	-.529
280	258	-.190	.094	.161	-.569
280	259	-.153	.083	.102	-.480
280	260	-.163	.096	.133	-.510
280	261	-.191	.098	.117	-.535
280	262	-.219	.100	.116	-.574
280	263	-.191	.084	.106	-.530
280	264	-.199	.100	.164	-.568
280	265	-.235	.106	.145	-.615
280	266	-.171	.097	.182	-.521
280	267	-.148	.081	.193	-.478
280	268	-.157	.089	.194	-.462
280	269	-.244	.097	.045	-.596
280	270	-.215	.105	.159	-.588
280	271	-.144	.078	.153	-.463
280	272	-.197	.095	.157	-.556
280	273	-.170	.096	.154	-.584
280	274	-.156	.094	.182	-.528
280	275	-.178	.074	.097	-.440
280	276	-.189	.087	.114	-.486
280	277	-.228	.091	.078	-.533
280	278	-.180	.095	.145	-.641
280	279	-.120	.078	.186	-.430
280	280	-.167	.096	.157	-.493
280	281	-.223	.097	.114	-.665
280	301	-.174	.115	.208	-.713
280	302	-.246	.121	.115	-.738
280	303	-.253	.141	.189	-.851
280	304	-.224	.128	.186	-.802
280	305	-.183	.123	.223	-.679
280	306	-.165	.112	.198	-.634
280	307	-.185	.122	.206	-1.059
280	308	-.115	.103	.227	-.463
280	309	-.243	.118	.131	-.643
280	310	-.196	.125	.190	-.855
280	311	-.187	.112	.149	-.935
280	312	-.131	.115	.248	-.677
280	313	-.244	.118	.172	-.704
280	314	-.179	.111	.227	-.636
280	315	-.181	.090	.143	-.488
280	316	-.148	.122	.243	-.741
280	317	-.249	.119	.167	-1.021

WD	TAP	CPMEAN	CPRMS	CPMAX	CPMIN
280	318	-.172	.106	.227	-.549
280	319	-.161	.093	.142	-.497
280	320	-.112	.097	.227	-.456
280	321	-.117	.089	.151	-.437
280	322	-.234	.102	.134	-.597
280	323	-.170	.098	.181	-.558
280	324	-.172	.095	.197	-.552
280	325	-.109	.097	.305	-.438
280	326	-.226	.104	.229	-.581
280	327	-.159	.096	.268	-.493
280	328	-.167	.091	.088	-.515
280	329	-.128	.096	.148	-.511
280	330	-.238	.104	.045	-.697
280	331	-.175	.100	.102	-.618
280	332	-.197	.101	.158	-.608
280	333	-.114	.092	.168	-.445
280	334	-.235	.103	.092	-.592
280	335	-.168	.096	.127	-.471
280	336	-.184	.090	.080	-.485
280	337	-.228	.097	.076	-.599
280	338	-.191	.092	.113	-.487
280	339	-.176	.102	.133	-.692
280	340	-.210	.136	.226	-.827
280	341	-.202	.106	.196	-.559
280	342	-.227	.094	.054	-.663
280	343	-.198	.103	.125	-.684
280	344	-.197	.103	.116	-.666
280	345	-.208	.101	.093	-.626
280	346	-.220	.095	.053	-.551
280	347	-.196	.106	.104	-.575
280	348	-.199	.111	.109	-.680
280	349	-.202	.106	.114	-.619
280	350	-.190	.104	.115	-.573
280	351	-.207	.100	.068	-.551
280	352	-.203	.103	.076	-.578
280	353	-.198	.100	.074	-.616
280	354	-.226	.094	.063	-.614
280	355	-.181	.101	.104	-.516
280	356	-.183	.099	.122	-.548
280	357	-.190	.098	.120	-.547
280	358	-.203	.094	.077	-.563
280	359	-.169	.102	.132	-.512
280	360	-.172	.104	.135	-.547
280	361	-.198	.113	.107	-.663
280	362	-.140	.094	.181	-.474
280	363	-.157	.093	.237	-.476
280	364	-.170	.094	.199	-.493
280	365	-.171	.095	.191	-.494
280	366	-.191	.091	.127	-.480
280	401	.025	.234	.931	-.661

WD	TAP	CPMEAN	CPRMS	CPMAX	CPMIN
280	402	-.053	.245	.858	-1.305
280	403	-.080	.195	.632	-.742
280	404	-.114	.146	.574	-.853
280	405	-.108	.217	.904	-1.119
280	406	-.034	.209	.967	-.823
280	407	-.128	.225	.806	-1.028
280	408	-.188	.159	.418	-1.182
280	409	-.154	.133	.439	-.756
280	410	-.080	.145	.560	-.917
280	411	-.187	.181	.614	-1.142
280	412	-.101	.165	.764	-.608
280	413	-.075	.187	.742	-.741
280	414	-.255	.116	.093	-1.108
280	415	-.139	.108	.259	-.561
280	416	-.207	.128	.340	-.745
280	417	-.094	.130	.604	-.658
280	418	-.098	.136	.479	-.660
280	419	-.015	.172	.782	-.578
280	420	-.087	.206	.821	-.739
280	421	-.051	.180	.695	-.658
280	422	-.273	.120	.067	-.733
280	423	-.161	.127	.458	-.553
280	424	-.120	.129	.531	-.496
280	425	.013	.135	.634	-.390
280	426	-.086	.166	.738	-.707
280	427	.026	.168	.756	-.543
280	428	.047	.149	.655	-.421
280	429	.037	.145	.642	-.438
280	430	-.243	.189	.488	-1.200
280	431	-.010	.147	.612	-.537
280	432	.049	.134	.521	-.417
280	433	.096	.157	.630	-.421
280	434	.063	.160	.629	-.489
280	435	.103	.186	.812	-.666
280	436	.060	.129	.566	-.391
280	437	.035	.123	.544	-.397
280	438	-.019	.145	.522	-.666
280	439	.035	.125	.478	-.400
280	440	.031	.121	.503	-.398
280	441	.056	.118	.545	-.354
280	442	.112	.136	.696	-.338
280	443	.148	.140	.710	-.269
280	444	.133	.137	.709	-.321
280	445	.093	.135	.582	-.333
280	446	-.004	.131	.575	-.424
280	447	.007	.145	.565	-.569
280	448	.006	.135	.621	-.399
280	449	-.054	.112	.500	-.503
280	450	-.030	.133	.695	-.609
280	451	.085	.140	.718	-.359

APPENDIX A -- PRESSURE DATA: BASS BROTHERS BUILDING - PHASE II, DALLAS

WD	TAP	CPMEAN	CPRMS	CPMAX	CPMIN
280	452	.039	.124	.481	-.416
280	453	-.081	.114	.324	-.513
280	454	-.167	.120	.230	-.632
280	455	.022	.121	.537	-.312
280	456	-.077	.110	.353	-.561
280	457	-.197	.097	.106	-.639
280	458	-.134	.097	.204	-.491
280	459	-.037	.108	.435	-.359
280	460	-.017	.105	.503	-.331
280	461	-.106	.094	.201	-.466
280	801	-.181	.122	.215	-.658
280	802	-.185	.146	.232	-.846
280	803	-.146	.109	.207	-.519
280	804	-.177	.091	.119	-.496
280	805	-.109	.100	.228	-.473
280	806	-.160	.110	.167	-.620
280	807	-.143	.109	.251	-.633
280	808	-.222	.093	.100	-.570
280	809	-.190	.097	.129	-.561
280	810	-.161	.104	.156	-.490
280	901	-.205	.102	.120	-.548
280	902	-.177	.089	.143	-.557
280	903	-.167	.150	.450	-.715
280	904	-.135	.125	.344	-.556
280	905	-.135	.147	.520	-.603
280	906	-.106	.158	.458	-.868
280	907	-.102	.184	.656	-1.133
280	908	-.245	.125	.165	-.808
280	909	-.010	.181	.599	-.949
280	910	-.275	.176	.316	-.987
280	911	-.199	.169	.430	-1.210
280	912	-.109	.189	.566	-.756
280	913	-.122	.149	.531	-.625
290	101	-.040	.161	.580	-.769
290	102	-.189	.238	.842	-1.403
290	103	-.067	.255	1.002	-.925
290	104	-.039	.248	.967	-.790
290	105	.004	.223	1.120	-.614
290	106	-.076	.247	.983	-.753
290	107	-.129	.228	.892	-.858
290	108	-.170	.202	.682	-1.128
290	109	.018	.186	.745	-.433
290	110	-.075	.199	.712	-.603
290	111	-.194	.156	.658	-1.102
290	112	-.217	.181	.540	-1.002
290	113	-.167	.179	.586	-.821
290	114	-.167	.191	.712	-.781
290	115	-.168	.179	.685	-.739
290	116	-.122	.160	.505	-.810
290	117	-.159	.172	.531	-.786
290	118	-.189	.194	.628	-.941
290	119	-.171	.180	.476	-1.269
290	120	-.196	.165	.392	-1.295
290	121	-.197	.152	.383	-.922
290	122	-.190	.145	.429	-.769
290	123	-.228	.165	.356	-1.055
290	124	-.232	.176	.797	-.857
290	125	-.201	.156	.737	-.941
290	126	-.115	.136	.706	-.592
290	127	-.152	.151	.421	-.655
290	128	-.221	.140	.352	-.915
290	129	-.256	.140	.312	-.890
290	130	-.193	.114	.244	-.702
290	131	-.242	.151	.428	-1.382
290	132	-.229	.146	.304	-.892
290	133	-.139	.140	.589	-.828
290	134	-.195	.134	.354	-.736
290	135	-.148	.107	.283	-.592
290	136	-.213	.114	.179	-.628
290	137	-.231	.111	.259	-.641
290	138	-.251	.106	.089	-.661
290	139	-.258	.107	.082	-.950
290	140	-.240	.184	.582	-1.172
290	141	-.250	.178	.644	-1.222
290	142	-.219	.146	.501	-1.053
290	143	-.147	.146	.505	-.615
290	144	-.174	.107	.178	-.538
290	145	-.266	.122	.106	-.692
290	146	-.290	.121	.107	-.777
290	147	-.297	.121	.061	-.734
290	148	-.237	.106	.078	-.695
290	149	-.139	.194	.716	-.829
290	150	-.125	.172	.680	-.806
290	151	-.054	.121	.531	-.422
290	152	-.130	.148	.547	-.641
290	153	-.257	.142	.173	-.824
290	154	-.288	.144	.159	-.885
290	155	-.301	.145	.131	-.991
290	156	-.021	.153	.540	-.535
290	157	-.020	.183	.915	-.654
290	158	-.049	.167	.589	-.569
290	159	.027	.163	.665	-.421
290	160	-.055	.135	.551	-.602
290	161	-.183	.141	.373	-.931
290	162	-.282	.152	.146	-1.067
290	163	-.321	.174	.163	-1.069
290	164	-.271	.157	.134	-.853
290	165	-.031	.160	.629	-.713
290	166	.036	.190	.883	-.591
290	167	-.006	.162	.666	-.615
290	168	.033	.135	.699	-.470
290	169	-.048	.145	.521	-.696
290	170	-.162	.165	.449	-1.153
290	171	-.191	.157	.332	-.926
290	172	-.192	.137	.215	-.712
290	173	-.254	.201	.354	-1.308
290	174	-.054	.128	.531	-.536
290	176	-.045	.099	.274	-.440
290	177	-.171	.111	.186	-.578
290	178	-.089	.147	.545	-.832
290	179	-.034	.138	.570	-.472
290	180	-.052	.110	.325	-.459
290	181	-.023	.114	.411	-.499
290	182	-.213	.136	.284	-.935
290	183	-.130	.129	.283	-.693
290	184	-.068	.103	.338	-.556
290	185	-.051	.113	.370	-.479
290	186	-.176	.107	.216	-.492
290	187	-.190	.115	.192	-.627
290	188	-.076	.083	.229	-.370
290	189	-.060	.101	.272	-.389
290	190	-.062	.111	.307	-.442
290	191	-.208	.100	.151	-.566
290	192	-.192	.084	.088	-.512
290	193	-.188	.105	.127	-.639
290	194	-.270	.125	.120	-.825
290	195	-.127	.095	.174	-.472
290	196	-.039	.084	.214	-.441
290	197	-.036	.100	.276	-.498
290	198	-.064	.116	.341	-.557
290	201	-.217	.135	.175	-.862
290	202	-.225	.125	.165	-.699
290	203	-.233	.128	.221	-.775
290	204	-.172	.110	.237	-.730
290	205	-.236	.144	.275	-.760
290	206	-.277	.145	.262	-.936
290	207	-.278	.143	.255	-.997
290	208	-.180	.121	.184	-.779
290	209	-.222	.134	.335	-.980
290	210	-.235	.129	.155	-1.105
290	211	-.296	.153	.194	-1.212
290	212	-.186	.110	.219	-.639
290	213	-.236	.128	.214	-.785
290	214	-.270	.136	.260	-.905
290	215	-.309	.150	.275	-1.072
290	216	-.165	.094	.130	-.485
290	217	-.200	.109	.161	-.616
290	218	-.163	.117	.227	-.567
290	219	-.266	.148	.342	-.989
290	220	-.279	.152	.216	-1.055

APPENDIX A -- PRESSURE DATA: BASS BROTHERS BUILDING - PHASE II, DALLAS

WD	TAP	CPMEAN	CPRMS	CPMAX	CPMIN
290	221	-.199	.101	.126	-.747
290	222	-.217	.119	.174	-.922
290	223	-.248	.132	.139	-1.029
290	224	-.219	.106	.085	-.618
290	225	-.180	.089	.134	-.500
290	226	-.179	.095	.170	-.501
290	227	-.228	.099	.130	-.565
290	228	-.214	.103	.155	-.568
290	229	-.189	.105	.186	-.593
290	230	-.214	.129	.242	-.765
290	231	-.276	.132	.266	-.904
290	232	-.258	.124	.245	-1.135
290	233	-.180	.088	.154	-.506
290	234	-.181	.100	.198	-.678
290	235	-.237	.103	.173	-.698
290	236	-.205	.100	.169	-.569
290	237	-.182	.097	.118	-.532
290	238	-.205	.114	.174	-.650
290	239	-.197	.107	.174	-.687
290	240	-.267	.134	.143	-.868
290	241	-.242	.130	.203	-.765
290	242	-.220	.141	.279	-.787
290	243	-.287	.154	.194	-.950
290	244	-.271	.153	.235	-.896
290	245	-.232	.137	.219	-1.031
290	247	-.201	.132	.214	-.838
290	248	-.232	.113	.167	-.667
290	249	-.208	.104	.163	-.550
290	250	-.207	.116	.234	-.714
290	251	-.223	.103	.163	-.644
290	252	-.220	.112	.223	-.596
290	253	-.202	.107	.149	-.621
290	254	-.266	.141	.173	-.822
290	255	-.281	.133	.135	-.996
290	256	-.257	.133	.119	-.962
290	257	-.223	.122	.128	-.990
290	258	-.200	.102	.165	-.581
290	259	-.177	.083	.092	-.492
290	260	-.184	.094	.124	-.525
290	261	-.208	.096	.133	-.589
290	262	-.231	.099	.109	-.581
290	263	-.194	.087	.135	-.528
290	264	-.199	.103	.232	-.612
290	265	-.238	.110	.184	-.693
290	266	-.185	.099	.196	-.536
290	267	-.181	.092	.098	-.528
290	268	-.188	.102	.129	-.650
290	269	-.252	.114	.087	-.780
290	270	-.238	.115	.210	-.754
290	271	-.162	.085	.101	-.459
290	272	-.212	.106	.133	-.663
290	273	-.161	.104	.152	-.582
290	274	-.171	.103	.149	-.537
290	275	-.180	.080	.125	-.450
290	276	-.198	.094	.162	-.520
290	277	-.227	.097	.145	-.539
290	278	-.154	.095	.188	-.540
290	279	-.119	.080	.184	-.489
290	280	-.170	.095	.107	-.617
290	281	-.243	.100	.063	-.660
290	301	-.184	.125	.231	-.911
290	302	-.257	.135	.169	-1.081
290	303	-.253	.137	.265	-.934
290	304	-.216	.122	.147	-.855
290	305	-.189	.121	.230	-.705
290	306	-.164	.108	.189	-.626
290	307	-.185	.120	.224	-1.055
290	308	-.123	.108	.214	-.523
290	309	-.248	.122	.158	-.704
290	310	-.209	.131	.278	-.794
290	311	-.182	.106	.177	-.662
290	312	-.129	.110	.256	-.645
290	313	-.232	.110	.122	-.661
290	314	-.169	.102	.175	-.580
290	315	-.164	.093	.181	-.551
290	316	-.139	.115	.246	-.992
290	317	-.234	.116	.156	-.788
290	318	-.157	.105	.205	-.587
290	319	-.157	.089	.135	-.474
290	320	-.108	.093	.207	-.444
290	321	-.103	.086	.231	-.400
290	322	-.226	.103	.120	-.601
290	323	-.162	.097	.180	-.502
290	324	-.172	.102	.231	-.697
290	325	-.104	.101	.263	-.488
290	326	-.218	.108	.170	-.575
290	327	-.150	.100	.193	-.466
290	328	-.152	.084	.129	-.436
290	329	-.103	.089	.196	-.386
290	330	-.226	.098	.129	-.573
290	331	-.159	.093	.186	-.486
290	332	-.200	.097	.119	-.543
290	333	-.112	.088	.214	-.487
290	334	-.229	.098	.120	-.669
290	335	-.166	.093	.159	-.596
290	336	-.181	.090	.094	-.457
290	337	-.229	.093	.077	-.571
290	338	-.184	.092	.131	-.483
290	339	-.158	.095	.149	-.475
290	340	-.217	.136	.295	-.765
290	341	-.166	.104	.248	-.493
290	342	-.207	.092	.077	-.507
290	343	-.172	.100	.141	-.517
290	344	-.159	.099	.146	-.478
290	345	-.177	.100	.125	-.485
290	346	-.207	.088	.124	-.521
290	347	-.185	.104	.134	-.528
290	348	-.180	.107	.158	-.626
290	349	-.177	.104	.119	-.531
290	350	-.171	.105	.143	-.543
290	351	-.188	.103	.155	-.595
290	352	-.169	.103	.155	-.625
290	353	-.183	.106	.139	-.605
290	354	-.219	.094	.101	-.555
290	355	-.171	.102	.166	-.513
290	356	-.163	.100	.176	-.498
290	357	-.164	.100	.176	-.479
290	358	-.192	.099	.106	-.766
290	359	-.145	.101	.169	-.498
290	360	-.138	.101	.200	-.505
290	361	-.177	.111	.211	-.605
290	362	-.138	.090	.165	-.475
290	363	-.150	.094	.185	-.505
290	364	-.138	.094	.194	-.490
290	365	-.150	.096	.193	-.553
290	366	-.173	.091	.118	-.476
290	401	-.043	.255	1.085	-.728
290	402	-.070	.278	.843	-1.246
290	403	-.115	.223	.797	-.730
290	404	-.148	.169	.477	-1.101
290	405	-.180	.200	.691	-1.010
290	406	-.141	.149	.579	-.636
290	407	-.237	.170	.517	-.838
290	408	-.182	.162	.414	-.893
290	409	-.173	.133	.432	-.781
290	410	-.102	.138	.487	-.776
290	411	-.223	.163	.416	-.897
290	412	-.166	.148	.354	-.741
290	413	-.150	.146	.575	-.743
290	414	-.229	.100	.143	-.654
290	415	-.158	.103	.216	-.598
290	416	-.260	.117	.180	-.786
290	417	-.172	.114	.287	-.630
290	418	-.200	.112	.361	-.644
290	419	-.134	.127	.469	-.679
290	420	-.232	.148	.567	-.917
290	421	-.172	.141	.563	-.997
290	422	-.250	.095	.110	-.654
290	423	-.201	.118	.226	-.589
290	424	-.213	.105	.134	-.567

APPENDIX A -- PRESSURE DATA: BASS BROTHERS BUILDING - PHASE II, DALLAS

WD	TAP	CPMEAN	CPRMS	CPMAX	CPMIN
290	425	-.067	.113	.350	-.452
290	426	-.165	.139	.408	-.638
290	427	-.060	.146	.602	-.474
290	428	-.033	.136	.523	-.492
290	429	-.009	.135	.619	-.535
290	430	-.193	.143	.302	-.987
290	431	-.041	.131	.439	-.544
290	432	-.023	.120	.350	-.412
290	433	.006	.136	.462	-.466
290	434	.001	.140	.529	-.436
290	435	-.011	.160	.564	-.524
290	436	-.036	.126	.478	-.486
290	437	-.022	.126	.497	-.409
290	438	-.012	.149	.466	-.695
290	439	.022	.131	.466	-.585
290	440	.017	.128	.443	-.471
290	441	.027	.109	.506	-.336
290	442	.068	.124	.639	-.409
290	443	.106	.127	.705	-.396
290	444	.078	.131	.653	-.352
290	445	.023	.130	.678	-.367
290	446	-.072	.134	.454	-.631
290	447	-.068	.131	.463	-.494
290	448	-.016	.132	.465	-.442
290	449	-.039	.106	.423	-.396
290	450	-.020	.120	.486	-.405
290	451	.041	.116	.506	-.355
290	452	-.003	.119	.506	-.406
290	453	-.131	.118	.263	-.636
290	454	-.197	.116	.196	-.613
290	455	-.016	.108	.442	-.432
290	456	-.131	.113	.272	-.575
290	457	-.217	.098	.167	-.627
290	458	-.150	.099	.222	-.532
290	459	-.037	.097	.465	-.375
290	460	-.031	.101	.357	-.372
290	461	-.149	.087	.097	-.443
290	801	-.083	.110	.343	-.498
290	802	-.049	.099	.291	-.482
290	803	-.068	.114	.366	-.445
290	804	-.185	.091	.108	-.520
290	805	-.131	.100	.198	-.491
290	806	-.169	.098	.138	-.553
290	807	-.085	.105	.298	-.582
290	808	-.202	.090	.124	-.513
290	809	-.213	.096	.109	-.593
290	810	-.142	.078	.159	-.374
290	901	-.181	.094	.128	-.503
290	902	-.163	.081	.118	-.470
290	903	-.181	.155	.568	-.691

WD	TAP	CPMEAN	CPRMS	CPMAX	CPMIN
290	904	-.150	.130	.331	-.634
290	905	-.135	.145	.512	-.627
290	906	-.138	.166	.501	-.848
290	907	-.116	.211	.670	-1.071
290	908	-.252	.124	.257	-.702
290	909	-.081	.179	.562	-.745
290	910	-.235	.169	.279	-1.096
290	911	-.233	.164	.411	-.898
290	912	-.152	.185	.663	-1.004
290	913	-.168	.155	.420	-.914
300	101	-.030	.150	.745	-.643
300	102	.002	.229	.742	-1.134
300	103	.133	.277	1.140	-.877
300	104	.100	.245	.929	-.634
300	105	.072	.197	.861	-.473
300	106	-.015	.230	1.036	-.693
300	107	-.079	.210	.827	-.694
300	108	-.175	.190	.691	-.815
300	109	.041	.159	.694	-.428
300	110	-.049	.176	.754	-.566
300	111	-.169	.163	.465	-.727
300	112	-.221	.161	.423	-1.197
300	113	-.016	.198	.685	-.743
300	114	.026	.263	.838	-.827
300	115	-.019	.247	.763	-.928
300	116	.115	.191	.888	-.663
300	117	.031	.196	.637	-.691
300	118	.062	.236	.930	-.784
300	119	-.001	.240	.826	-.958
300	120	-.104	.205	.656	-1.237
300	121	-.138	.178	.689	-1.075
300	122	-.216	.127	.316	-1.026
300	123	-.201	.164	.483	-.884
300	124	-.077	.244	.780	-1.368
300	125	-.016	.243	1.030	-.785
300	126	.099	.194	.831	-.645
300	127	.003	.214	1.002	-.609
300	128	-.187	.164	.539	-.787
300	129	-.291	.169	.264	-1.217
300	130	-.221	.132	.276	-1.100
300	131	-.111	.219	.594	-.909
300	132	-.099	.232	.831	-1.039
300	133	.035	.205	.887	-.614
300	134	-.049	.188	.872	-.658
300	135	-.077	.138	.587	-.583
300	136	-.166	.127	.419	-.604
300	137	-.203	.117	.291	-.657
300	138	-.229	.107	.190	-.639
300	139	-.233	.115	.149	-1.129
300	140	-.092	.211	.708	-.807

WD	TAP	CPMEAN	CPRMS	CPMAX	CPMIN
300	141	-.076	.233	.995	-.819
300	142	-.046	.193	.899	-.892
300	143	.021	.184	.906	-.786
300	144	-.058	.139	.545	-.639
300	145	-.161	.129	.362	-.678
300	146	-.197	.115	.301	-.726
300	147	-.227	.107	.256	-.675
300	148	-.179	.093	.101	-.515
300	149	-.047	.201	.624	-.730
300	150	.024	.225	.924	-.851
300	151	.097	.170	.721	-.373
300	152	.063	.222	1.008	-.502
300	153	-.120	.132	.413	-.651
300	154	-.157	.125	.381	-.669
300	155	-.158	.121	.365	-.686
300	156	.044	.162	.596	-.555
300	157	.092	.221	.965	-.644
300	158	.135	.178	.891	-.383
300	159	.144	.178	.950	-.354
300	160	.081	.156	.735	-.410
300	161	-.063	.154	.596	-.583
300	162	-.162	.146	.385	-.588
300	163	-.184	.132	.315	-.569
300	164	-.143	.105	.363	-.499
300	165	.017	.157	.631	-.614
300	166	.189	.195	1.095	-.637
300	167	.192	.177	.917	-.375
300	168	.167	.141	.740	-.399
300	169	.090	.171	.733	-.638
300	170	-.020	.182	.721	-.960
300	171	-.083	.166	.556	-.773
300	172	-.057	.124	.401	-.751
300	173	-.105	.141	.435	-1.063
300	174	.122	.175	.804	-.440
300	176	-.110	.144	.330	-.760
300	177	-.157	.129	.246	-.578
300	178	.101	.164	.699	-.570
300	179	.177	.176	.867	-.345
300	180	.012	.111	.451	-.371
300	181	-.119	.157	.331	-.973
300	182	-.206	.181	.272	-1.134
300	183	-.139	.169	.424	-.939
300	184	-.125	.139	.297	-.735
300	185	-.115	.138	.405	-.794
300	186	-.118	.116	.326	-.623
300	187	-.121	.111	.200	-.495
300	188	-.064	.084	.234	-.392
300	189	-.026	.115	.384	-.457
300	190	-.049	.122	.357	-.545
300	191	-.190	.097	.164	-.548

APPENDIX A -- PRESSURE DATA: BASS BROTHERS BUILDING - PHASE II, DALLAS

WD	TAP	CPMEAN	CPRMS	CPMAX	CPMIN
300	192	-.165	.088	.130	-.513
300	193	-.094	.103	.244	-.456
300	194	-.131	.123	.287	-.575
300	195	-.038	.128	.447	-.420
300	196	.042	.114	.463	-.305
300	197	-.002	.110	.439	-.369
300	198	-.088	.107	.315	-.537
300	201	-.184	.124	.199	-.787
300	202	-.208	.119	.196	-.797
300	203	-.226	.124	.209	-.747
300	204	-.197	.115	.139	-.710
300	205	-.269	.145	.179	-.908
300	206	-.319	.145	.106	-.969
300	207	-.302	.142	.110	-.965
300	208	-.164	.104	.149	-.665
300	209	-.207	.119	.174	-.791
300	210	-.239	.119	.171	-.787
300	211	-.370	.199	.139	-1.772
300	212	-.215	.114	.139	-.666
300	213	-.260	.131	.145	-.784
300	214	-.310	.142	.156	-.960
300	215	-.402	.189	.114	-1.289
300	216	-.186	.094	.098	-.516
300	217	-.227	.108	.096	-.644
300	218	-.187	.117	.261	-.655
300	219	-.366	.206	.246	-1.250
300	220	-.402	.210	.113	-1.464
300	221	-.245	.120	.128	-.733
300	222	-.268	.142	.169	-.924
300	223	-.267	.129	.133	-.872
300	224	-.231	.123	.159	-.807
300	225	-.192	.105	.148	-.712
300	226	-.194	.111	.149	-.631
300	227	-.250	.113	.089	-.639
300	228	-.244	.120	.119	-.677
300	229	-.208	.111	.120	-.613
300	230	-.239	.136	.149	-.834
300	231	-.308	.144	.119	-1.032
300	232	-.288	.126	.054	-.881
300	233	-.191	.107	.177	-.613
300	234	-.193	.119	.208	-.750
300	235	-.252	.122	.176	-.700
300	236	-.223	.115	.152	-.650
300	237	-.206	.110	.145	-.640
300	238	-.231	.128	.201	-.735
300	239	-.229	.111	.165	-.680
300	240	-.302	.150	.138	-.932
300	241	-.292	.149	.149	-1.030
300	242	-.264	.144	.217	-1.085
300	243	-.344	.162	.133	-1.426
300	244	-.326	.167	.121	-1.403
300	245	-.266	.135	.202	-1.002
300	247	-.235	.129	.187	-.839
300	248	-.253	.121	.124	-.835
300	249	-.246	.125	.117	-.790
300	250	-.248	.139	.238	-.982
300	251	-.254	.116	.154	-.738
300	252	-.269	.122	.079	-.799
300	253	-.252	.118	.102	-.770
300	254	-.296	.152	.154	-1.259
300	255	-.346	.157	.126	-1.232
300	256	-.314	.155	.125	-1.263
300	257	-.274	.122	.117	-.851
300	258	-.240	.111	.125	-.786
300	259	-.194	.087	.071	-.493
300	260	-.205	.100	.096	-.558
300	261	-.243	.102	.092	-.609
300	262	-.265	.109	.053	-.624
300	263	-.219	.091	.061	-.568
300	264	-.220	.106	.173	-.644
300	265	-.263	.112	.154	-.675
300	266	-.200	.102	.219	-.576
300	267	-.187	.096	.201	-.554
300	268	-.212	.104	.173	-.586
300	269	-.276	.113	.090	-.677
300	270	-.247	.111	.205	-.701
300	271	-.203	.090	.086	-.623
300	272	-.252	.115	.097	-.726
300	273	-.200	.103	.184	-.656
300	274	-.212	.106	.145	-.612
300	275	-.209	.092	.129	-.669
300	276	-.257	.117	.100	-.747
300	277	-.222	.103	.163	-.613
300	278	-.196	.099	.203	-.671
300	279	-.142	.082	.117	-.454
300	280	-.182	.098	.155	-.531
300	281	-.320	.129	.084	-.814
300	301	-.159	.110	.214	-.662
300	302	-.235	.121	.160	-1.253
300	303	-.236	.121	.164	-.771
300	304	-.189	.111	.313	-.654
300	305	-.162	.114	.284	-.572
300	306	-.155	.106	.265	-.687
300	307	-.129	.105	.300	-.853
300	308	-.131	.102	.247	-.555
300	309	-.148	.106	.233	-.613
300	310	-.168	.118	.223	-.673
300	311	-.133	.098	.176	-.539
300	312	-.141	.109	.200	-.595
300	313	-.140	.099	.158	-.605
300	314	-.141	.098	.158	-.561
300	315	-.112	.083	.187	-.403
300	316	-.152	.104	.215	-.656
300	317	-.146	.097	.172	-.577
300	318	-.139	.096	.169	-.521
300	319	-.114	.077	.140	-.344
300	320	-.124	.087	.169	-.386
300	321	-.118	.092	.196	-.396
300	322	-.144	.095	.189	-.466
300	323	-.149	.096	.190	-.508
300	324	-.133	.090	.172	-.519
300	325	-.125	.096	.202	-.495
300	326	-.134	.096	.202	-.478
300	327	-.131	.094	.208	-.449
300	328	-.124	.084	.179	-.451
300	329	-.130	.095	.206	-.437
300	330	-.161	.107	.201	-.553
300	331	-.157	.105	.209	-.573
300	332	-.216	.111	.193	-.701
300	333	-.154	.096	.153	-.447
300	334	-.165	.096	.130	-.466
300	335	-.172	.096	.132	-.481
300	336	-.162	.086	.103	-.499
300	337	-.234	.102	.142	-.596
300	338	-.176	.091	.133	-.500
300	339	-.150	.097	.153	-.484
300	340	-.157	.112	.215	-.532
300	341	-.164	.101	.177	-.482
300	342	-.200	.090	.087	-.547
300	343	-.167	.099	.145	-.552
300	344	-.143	.095	.160	-.516
300	345	-.167	.095	.123	-.566
300	346	-.203	.087	.075	-.519
300	347	-.175	.098	.135	-.519
300	348	-.164	.099	.147	-.519
300	349	-.166	.104	.212	-.550
300	350	-.150	.102	.236	-.545
300	351	-.171	.096	.173	-.526
300	352	-.145	.097	.199	-.572
300	353	-.168	.100	.171	-.544
300	354	-.208	.092	.116	-.519
300	355	-.173	.104	.203	-.584
300	356	-.141	.094	.195	-.446
300	357	-.157	.094	.174	-.479
300	358	-.188	.090	.126	-.519
300	359	-.155	.099	.156	-.528
300	360	-.136	.101	.170	-.526
300	361	-.170	.104	.119	-.719
300	362	-.108	.085	.195	-.410
300	363	-.150	.096	.170	-.532

APPENDIX A -- PRESSURE DATA:

BASS BROTHERS BUILDING - PHASE II, DALLAS

WD	TAP	CPMEAN	CPRMS	CPMAX	CPMIN
300	364	-.125	.095	.188	-.489
300	365	-.140	.098	.216	-.549
300	366	-.186	.095	.112	-.686
300	401	-.050	.215	.809	-.897
300	402	-.058	.225	.871	-.778
300	403	-.100	.191	.643	-.808
300	404	-.115	.144	.486	-.733
300	405	-.154	.205	.726	-1.105
300	406	-.170	.144	.515	-.778
300	407	-.150	.148	.541	-.786
300	408	-.196	.154	.428	-.988
300	409	-.172	.133	.334	-.807
300	410	-.161	.150	.417	-.807
300	411	-.172	.163	.462	-1.059
300	412	-.148	.143	.410	-.659
300	413	-.145	.124	.255	-.562
300	414	-.181	.090	.088	-.582
300	415	-.166	.098	.138	-.547
300	416	-.162	.099	.174	-.541
300	417	-.152	.101	.217	-.653
300	418	-.151	.088	.126	-.484
300	419	-.139	.103	.214	-.636
300	420	-.147	.106	.196	-.523
300	421	-.162	.108	.221	-.592
300	422	-.222	.102	.154	-.730
300	423	-.247	.106	.087	-.641
300	424	-.273	.090	.019	-.633
300	425	-.178	.105	.207	-.588
300	426	-.187	.108	.194	-.611
300	427	-.167	.113	.263	-.578
300	428	-.126	.097	.336	-.426
300	429	-.128	.108	.410	-.584
300	430	-.230	.142	.221	-2.260
300	431	-.220	.129	.217	-.987
300	432	-.179	.127	.217	-.714
300	433	-.198	.139	.284	-.674
300	434	-.095	.132	.357	-.555
300	435	-.177	.150	.488	-.669
300	436	-.138	.118	.288	-.558
300	437	-.094	.114	.361	-.484
300	438	-.222	.176	.279	-1.345
300	439	-.199	.159	.269	-.913
300	440	-.222	.165	.284	-.954
300	441	-.169	.137	.268	-1.051
300	442	-.110	.151	.370	-1.022
300	443	-.020	.127	.534	-.543
300	444	-.047	.128	.596	-.556
300	445	-.101	.123	.377	-.625
300	446	-.115	.128	.418	-.708
300	447	-.127	.126	.445	-.573

WD	TAP	CPMEAN	CPRMS	CPMAX	CPMIN
300	448	-.099	.133	.429	-.519
300	449	-.196	.140	.278	-.829
300	450	-.134	.136	.369	-.725
300	451	-.062	.118	.377	-.740
300	452	-.056	.131	.402	-.734
300	453	-.127	.125	.401	-.760
300	454	-.188	.100	.180	-.556
300	455	-.088	.112	.444	-.425
300	456	-.137	.122	.321	-.651
300	457	-.216	.089	.046	-.546
300	458	-.167	.094	.122	-.511
300	459	-.113	.124	.461	-.513
300	460	-.152	.122	.417	-.590
300	461	-.178	.096	.257	-.477
300	801	-.174	.149	.258	-.862
300	802	-.124	.157	.308	-.882
300	803	.011	.136	.551	-.490
300	804	-.185	.089	.128	-.455
300	805	-.152	.098	.183	-.450
300	806	-.150	.103	.205	-.501
300	807	-.103	.107	.233	-.485
300	808	-.133	.097	.176	-.489
300	809	-.220	.105	.126	-.635
300	810	-.148	.098	.125	-.524
300	901	-.177	.093	.140	-.539
300	902	-.165	.093	.144	-.555
300	903	-.114	.121	.349	-.601
300	904	-.130	.113	.248	-.640
300	905	-.078	.132	.599	-.584
300	906	-.159	.162	.483	-.841
300	907	-.019	.175	.633	-.678
300	908	-.271	.121	.073	-.900
300	909	-.085	.169	.515	-.801
300	910	-.321	.172	.353	-1.250
300	911	-.107	.156	.522	-.691
300	912	-.097	.160	.539	-.877
300	913	-.250	.159	.276	-.793
310	101	.095	.168	.716	-.419
310	102	.126	.150	.600	-.556
310	103	.352	.200	1.001	-.320
310	104	.305	.193	.969	-.329
310	105	.187	.152	.753	-.318
310	106	-.016	.209	.733	-.912
310	107	-.120	.196	.754	-.877
310	108	-.083	.234	.808	-.890
310	109	.051	.172	.867	-.429
310	110	-.011	.198	1.012	-.670
310	111	.121	.235	.981	-.530
310	112	-.109	.211	.667	-.845
310	113	.143	.127	.581	-.368

WD	TAP	CPMEAN	CPRMS	CPMAX	CPMIN
310	114	.399	.208	1.050	-.590
310	115	.378	.222	1.022	-.470
310	116	.366	.168	1.231	-.346
310	117	.117	.129	.834	-.424
310	118	.223	.152	1.234	-.307
310	119	.328	.211	1.197	-.411
310	120	.219	.225	1.049	-.421
310	121	.172	.211	.923	-.527
310	122	-.237	.146	.267	-.769
310	123	.069	.244	1.069	-.921
310	124	.136	.174	.920	-.766
310	125	.362	.207	1.143	-.403
310	126	.384	.155	.981	-.223
310	127	.356	.229	1.293	-.706
310	128	.074	.244	1.204	-.713
310	129	-.260	.291	.747	-1.443
310	130	-.110	.191	.692	-1.026
310	131	.090	.174	.702	-.710
310	132	.295	.231	1.115	-.767
310	133	.375	.172	1.063	-.262
310	134	.325	.209	1.099	-.483
310	135	.270	.203	.994	-.395
310	136	.102	.215	.934	-.675
310	137	-.024	.186	.772	-.584
310	138	-.136	.148	.571	-.588
310	139	-.153	.127	.301	-.538
310	140	.036	.180	.699	-.730
310	141	.215	.226	.923	-.860
310	142	.261	.200	.987	-.448
310	143	.311	.157	.878	-.358
310	144	.283	.175	.895	-.294
310	145	.152	.190	.838	-.431
310	146	.040	.174	.754	-.436
310	147	-.064	.151	.714	-.467
310	148	-.128	.111	.297	-.590
310	149	.017	.180	.707	-.838
310	150	.217	.222	.990	-.807
310	151	.347	.135	.961	-.575
310	152	.244	.174	.930	-.307
310	153	.103	.183	.838	-.447
310	154	.042	.178	.720	-.463
310	155	.046	.173	.693	-.465
310	156	.060	.154	.619	-.579
310	157	.222	.202	1.130	-.616
310	158	.333	.166	.942	-.250
310	159	.332	.166	.962	-.261
310	160	.282	.149	.895	-.227
310	161	.176	.173	.858	-.391
310	162	.054	.175	.652	-.537
310	163	-.011	.156	.587	-.513

APPENDIX A -- PRESSURE DATA: BASS BROTHERS BUILDING - PHASE II, DALLAS

WD	TAP	CPMEAN	CPRMS	CPMAX	CPMIN
310	164	-.059	.129	.453	-.532
310	165	-.059	.139	.461	-.614
310	166	.162	.151	.808	-.375
310	167	.225	.145	.905	-.298
310	168	.206	.129	.599	-.194
310	169	.174	.146	.708	-.238
310	170	.081	.153	.646	-.455
310	171	-.018	.151	.531	-.580
310	172	.000	.120	.466	-.535
310	173	-.046	.143	.532	-.654
310	174	.224	.170	1.080	-.267
310	176	-.525	.188	.119	-1.205
310	177	-.238	.128	.169	-.767
310	178	.126	.132	.583	-.315
310	179	.317	.169	1.132	-.179
310	180	.102	.139	.797	-.429
310	181	-.210	.179	.310	-1.268
310	182	-.266	.245	.580	-1.714
310	183	-.120	.202	.608	-1.539
310	184	-.067	.141	.404	-1.070
310	185	-.094	.145	.342	-1.041
310	186	-.022	.139	.430	-.849
310	187	-.021	.122	.345	-.518
310	188	.040	.098	.338	-.411
310	189	.107	.141	.533	-.451
310	190	.072	.145	.614	-.472
310	191	-.196	.111	.158	-.604
310	192	-.173	.105	.162	-.528
310	193	.001	.103	.382	-.294
310	194	-.010	.125	.416	-.532
310	195	.123	.128	.568	-.240
310	196	.198	.110	.594	-.108
310	197	.096	.122	.773	-.289
310	198	-.107	.111	.250	-.600
310	201	-.194	.126	.203	-.845
310	202	-.237	.125	.167	-.739
310	203	-.248	.129	.280	-.759
310	204	-.209	.103	.159	-.561
310	205	-.281	.128	.190	-.802
310	206	-.406	.155	.157	-.953
310	207	-.349	.142	.166	-.877
310	208	-.177	.113	.172	-.851
310	209	-.221	.127	.296	-.732
310	210	-.269	.125	.238	-.730
310	211	-.598	.287	.098	-1.670
310	212	-.227	.106	.073	-.687
310	213	-.260	.117	.063	-.756
310	214	-.311	.120	.031	-.830
310	215	-.499	.190	.142	-1.309
310	216	-.207	.101	.107	-.553
310	217	-.244	.114	.150	-.775
310	218	-.189	.118	.224	-.626
310	219	-.418	.202	.148	-1.363
310	220	-.355	.154	.102	-.998
310	221	-.243	.116	.088	-.705
310	222	-.263	.130	.143	-.894
310	223	-.277	.117	.111	-.699
310	224	-.271	.148	.172	-1.005
310	225	-.241	.123	.187	-.881
310	226	-.236	.124	.220	-.745
310	227	-.283	.117	.186	-.765
310	228	-.259	.120	.230	-.810
310	229	-.216	.103	.073	-.583
310	230	-.262	.120	.149	-.746
310	231	-.298	.121	.040	-.826
310	232	-.258	.107	.047	-.852
310	233	-.237	.131	.105	-.880
310	234	-.241	.130	.139	-.735
310	235	-.306	.128	.087	-.772
310	236	-.252	.112	.126	-.594
310	237	-.231	.107	.115	-.760
310	238	-.233	.113	.152	-.764
310	239	-.250	.092	.026	-.595
310	240	-.284	.123	.069	-.920
310	241	-.249	.125	.131	-.960
310	242	-.272	.117	.105	-.741
310	243	-.327	.129	.075	-1.089
310	244	-.289	.128	.116	-1.351
310	245	-.264	.117	.172	-.880
310	247	-.247	.107	.078	-.780
310	248	-.285	.134	.197	-.851
310	249	-.267	.124	.048	-.818
310	250	-.268	.136	.156	-.978
310	251	-.308	.124	.129	-.865
310	252	-.288	.117	.059	-.848
310	253	-.245	.099	.110	-.592
310	254	-.283	.122	.153	-1.324
310	255	-.329	.117	.085	-1.202
310	256	-.287	.117	.116	-1.397
310	257	-.243	.101	.101	-.816
310	258	-.289	.118	.098	-.851
310	259	-.244	.098	.084	-.656
310	260	-.248	.112	.132	-.672
310	261	-.294	.113	.114	-.803
310	262	-.300	.118	.059	-.775
310	263	-.249	.090	.061	-.640
310	264	-.244	.102	.085	-.657
310	265	-.293	.109	.045	-1.023
310	266	-.244	.100	.075	-.715
310	267	-.205	.097	.136	-.677
310	268	-.241	.108	.087	-.642
310	269	-.297	.118	.042	-.819
310	270	-.278	.125	.141	-.728
310	271	-.219	.095	.078	-.657
310	272	-.257	.121	.091	-.947
310	273	-.223	.104	.095	-.595
310	274	-.226	.106	.090	-.620
310	275	-.262	.102	.044	-.735
310	276	-.341	.136	.078	-1.026
310	277	-.245	.111	.117	-.658
310	278	-.231	.104	.087	-.572
310	279	-.177	.083	.113	-.563
310	280	-.202	.105	.182	-.645
310	281	-.402	.133	.092	-1.043
310	301	-.185	.104	.127	-.612
310	302	-.249	.110	.109	-.747
310	303	-.258	.117	.126	-.733
310	304	-.217	.109	.114	-.584
310	305	-.191	.112	.157	-.569
310	306	-.194	.112	.154	-1.078
310	307	-.179	.092	.119	-.558
310	308	-.162	.103	.208	-.507
310	309	-.170	.107	.221	-.557
310	310	-.216	.121	.137	-.739
310	311	-.189	.089	.114	-.457
310	312	-.178	.097	.171	-.473
310	313	-.166	.091	.141	-.455
310	314	-.176	.090	.161	-.531
310	315	-.175	.085	.149	-.443
310	316	-.222	.125	.190	-.711
310	317	-.209	.114	.189	-.727
310	318	-.206	.108	.181	-.601
310	319	-.180	.088	.130	-.529
310	320	-.171	.095	.185	-.566
310	321	-.166	.098	.186	-.562
310	322	-.160	.099	.237	-.605
310	323	-.171	.100	.235	-.642
310	324	-.199	.097	.087	-.656
310	325	-.183	.104	.137	-.743
310	326	-.179	.100	.155	-.769
310	327	-.180	.096	.159	-.553
310	328	-.157	.084	.114	-.426
310	329	-.145	.094	.157	-.446
310	330	-.161	.109	.182	-.529
310	331	-.162	.106	.155	-.547
310	332	-.251	.106	.049	-.654
310	333	-.170	.095	.138	-.519
310	334	-.170	.096	.147	-.517
310	335	-.187	.098	.135	-.532
310	336	-.193	.086	.110	-.495

APPENDIX A -- PRESSURE DATA: BASS BROTHERS BUILDING - PHASE II, DALLAS

WD	TAP	CPMEAN	CPRMS	CPMAX	CPMIN
310	337	-.233	.096	.081	-.584
310	338	-.169	.092	.184	-.462
310	339	-.169	.099	.173	-.530
310	340	-.210	.117	.156	-.650
310	341	-.205	.113	.150	-.644
310	342	-.235	.095	.077	-.552
310	343	-.199	.102	.145	-.554
310	344	-.160	.098	.173	-.527
310	345	-.193	.099	.128	-.532
310	346	-.234	.095	.067	-.586
310	347	-.206	.105	.149	-.616
310	348	-.183	.103	.173	-.642
310	349	-.185	.104	.148	-.577
310	350	-.164	.099	.133	-.522
310	351	-.201	.101	.159	-.573
310	352	-.162	.097	.181	-.532
310	353	-.191	.102	.157	-.558
310	354	-.231	.093	.099	-.505
310	355	-.205	.104	.119	-.609
310	356	-.155	.100	.165	-.538
310	357	-.172	.100	.152	-.562
310	358	-.230	.091	.146	-.531
310	359	-.205	.100	.138	-.537
310	360	-.166	.098	.196	-.493
310	361	-.193	.100	.191	-.523
310	362	-.146	.085	.146	-.419
310	363	-.196	.098	.184	-.560
310	364	-.160	.098	.181	-.503
310	365	-.185	.099	.143	-.551
310	366	-.238	.095	.054	-.760
310	401	-.117	.171	.450	-.870
310	402	-.261	.165	.340	-.994
310	403	-.281	.204	.520	-.877
310	404	-.289	.160	.292	-1.024
310	405	-.226	.212	.655	-1.577
310	406	-.261	.137	.153	-.849
310	407	-.229	.153	.351	-.874
310	408	-.343	.188	.155	-1.779
310	409	-.308	.141	.054	-1.048
310	410	-.294	.151	.104	-.998
310	411	-.299	.163	.172	-1.123
310	412	-.276	.151	.255	-1.040
310	413	-.207	.135	.257	-.735
310	414	-.245	.101	.073	-.629
310	415	-.237	.112	.089	-.659
310	416	-.237	.114	.088	-.635
310	417	-.245	.117	.103	-.804
310	418	-.257	.105	.097	-.861
310	419	-.218	.114	.223	-.768
310	420	-.181	.108	.155	-.703

WD	TAP	CPMEAN	CPRMS	CPMAX	CPMIN
310	421	-.195	.109	.122	-.697
310	422	-.231	.090	.069	-.584
310	423	-.250	.102	.116	-.620
310	424	-.287	.098	.065	-.624
310	425	-.218	.102	.131	-.607
310	426	-.231	.105	.166	-.581
310	427	-.224	.105	.114	-.637
310	428	-.175	.096	.155	-.573
310	429	-.168	.110	.208	-.678
310	430	-.266	.119	.104	-.960
310	431	-.285	.121	.084	-.811
310	432	-.289	.112	.059	-.758
310	433	-.302	.132	.126	-.864
310	434	-.267	.126	.135	-.786
310	435	-.345	.146	.166	-1.011
310	436	-.268	.116	.167	-.708
310	437	-.173	.107	.171	-.559
310	438	-.348	.170	.177	-1.502
310	439	-.296	.150	.186	-.987
310	440	-.333	.154	.150	-1.254
310	441	-.376	.148	.088	-1.272
310	442	-.253	.159	.267	-.824
310	443	-.108	.135	.472	-.536
310	444	-.141	.140	.366	-.578
310	445	-.189	.125	.273	-.611
310	446	-.211	.121	.165	-.657
310	447	-.207	.115	.192	-.625
310	448	-.206	.120	.190	-.648
310	449	-.525	.217	.024	-1.367
310	450	-.343	.169	.200	-1.330
310	451	-.151	.142	.356	-.780
310	452	-.107	.122	.421	-.494
310	453	-.289	.142	.138	-.908
310	454	-.229	.115	.142	-.733
310	455	-.098	.123	.335	-.627
310	456	-.301	.138	.088	-.927
310	457	-.266	.107	.116	-.675
310	458	-.232	.115	.188	-.661
310	459	-.215	.129	.194	-.715
310	460	-.264	.129	.143	-.692
310	461	-.209	.095	.113	-.560
310	801	-.359	.170	.111	-1.111
310	802	-.318	.182	.178	-1.110
310	803	.039	.128	.618	-.330
310	804	-.232	.092	.078	-.535
310	805	-.197	.103	.157	-.563
310	806	-.230	.113	.145	-.721
310	807	-.171	.114	.225	-.588
310	808	-.017	.108	.338	-.379
310	809	-.259	.122	.119	-.766

WD	TAP	CPMEAN	CPRMS	CPMAX	CPMIN
310	810	-.174	.102	.168	-.568
310	901	-.206	.099	.110	-.595
310	902	-.175	.085	.108	-.469
310	903	-.195	.123	.153	-.858
310	904	-.211	.116	.155	-.694
310	905	-.072	.148	.537	-.566
310	906	-.263	.136	.237	-.794
310	907	-.053	.167	.479	-.654
310	908	-.300	.119	.022	-.840
310	909	-.310	.181	.282	-.941
310	910	-.288	.137	.109	-.873
310	911	-.247	.236	.565	-1.063
310	912	-.298	.237	.430	-1.043
310	913	-.324	.124	.303	-1.061
320	101	.085	.169	.628	-.419
320	102	.116	.153	.796	-.435
320	103	.332	.174	1.005	-.254
320	104	.270	.162	.836	-.270
320	105	.113	.125	.552	-.262
320	106	-.108	.235	.824	-.979
320	107	-.216	.202	.505	-.980
320	108	.088	.193	.870	-1.120
320	109	-.124	.132	.478	-.608
320	110	-.189	.154	.438	-.736
320	111	.307	.187	1.187	-.238
320	112	.217	.204	.909	-.882
320	113	.132	.132	.629	-.359
320	114	.456	.174	1.169	-.122
320	115	.448	.186	1.181	-.221
320	116	.315	.153	.853	-.368
320	117	.075	.141	.561	-.422
320	118	.181	.155	.670	-.337
320	119	.374	.163	1.029	-.169
320	120	.317	.168	1.014	-.183
320	121	.359	.172	1.077	-.242
320	122	-.018	.154	.535	-.797
320	123	.255	.190	.907	-.513
320	124	.072	.167	.805	-.701
320	125	.337	.173	.938	-.336
320	126	.414	.158	.952	-.029
320	127	.421	.172	1.015	-.094
320	128	.436	.193	1.108	-.186
320	129	.314	.211	.921	-1.160
320	130	.255	.177	.852	-.467
320	131	.023	.133	.511	-.490
320	132	.316	.167	.900	-.332
320	133	.448	.179	1.024	-.067
320	134	.416	.176	.998	-.164
320	135	.477	.161	1.127	-.048
320	136	.424	.185	1.168	-.194

APPENDIX A -- PRESSURE DATA: BASS BROTHERS BUILDING - PHASE II, DALLAS

WD	TAP	CPMEAN	CPRMS	CPMAX	CPMIN
320	137	.307	.188	1.036	-.351
320	138	.157	.168	.884	-.406
320	139	.001	.139	.640	-.489
320	140	-.022	.136	.442	-.736
320	141	.267	.162	.878	-.192
320	142	.383	.163	1.060	-.091
320	143	.381	.172	1.088	-.098
320	144	.387	.139	1.124	-.052
320	145	.342	.155	1.329	-.118
320	146	.243	.157	1.267	-.233
320	147	.133	.144	.957	-.291
320	148	.053	.117	.628	-.327
320	149	-.066	.150	.654	-.629
320	150	.248	.164	.845	-.279
320	151	.377	.135	.941	-.055
320	152	.337	.159	.938	-.085
320	153	.295	.162	.919	-.184
320	154	.240	.164	.899	-.269
320	155	.252	.161	.882	-.264
320	156	-.016	.121	.408	-.515
320	157	.234	.145	.825	-.331
320	158	.346	.138	.818	-.011
320	159	.342	.139	.808	-.019
320	160	.327	.128	.771	-.100
320	161	.298	.144	.845	-.153
320	162	.214	.147	.776	-.284
320	163	.153	.140	.712	-.327
320	164	.067	.117	.481	-.313
320	165	-.075	.155	.485	-.667
320	166	.161	.146	.732	-.265
320	167	.222	.144	.775	-.216
320	168	.193	.120	.613	-.252
320	169	.152	.130	.576	-.327
320	170	.046	.128	.460	-.558
320	171	-.093	.127	.372	-.651
320	172	-.055	.103	.313	-.524
320	173	-.088	.124	.357	-.688
320	174	.253	.157	.840	-.192
320	176	-.709	.222	-.156	-1.675
320	177	-.258	.153	.232	-1.060
320	178	.154	.145	.714	-.278
320	179	.363	.176	1.348	-.150
320	180	.152	.145	.708	-.490
320	181	-.249	.183	.466	-1.071
320	182	-.322	.241	.402	-1.604
320	183	-.138	.176	.448	-1.533
320	184	-.011	.116	.387	-.524
320	185	-.055	.137	.499	-.623
320	186	-.010	.153	.452	-.859
320	187	.019	.136	.518	-.835
320	188	.087	.114	.382	-.342
320	189	.115	.163	.653	-.549
320	190	.058	.166	.563	-.523
320	191	-.211	.122	.178	-.775
320	192	-.162	.123	.239	-.666
320	193	.049	.118	.431	-.417
320	194	.066	.145	.521	-.708
320	195	.186	.135	.652	-.229
320	196	.232	.120	.810	-.118
320	197	.101	.133	.853	-.287
320	198	-.121	.112	.241	-.524
320	201	-.218	.119	.230	-.701
320	202	-.272	.120	.174	-.820
320	203	-.282	.125	.210	-.947
320	204	-.261	.122	.137	-.723
320	205	-.319	.146	.161	-.935
320	206	-.563	.174	.004	-1.137
320	207	-.485	.159	.050	-1.038
320	208	-.224	.124	.180	-.801
320	209	-.262	.141	.351	-.854
320	210	-.326	.143	.248	-.954
320	211	-.794	.282	.139	-1.766
320	212	-.287	.126	.069	-.946
320	213	-.319	.139	.092	-1.032
320	214	-.379	.143	.019	-1.140
320	215	-.543	.197	.071	-1.486
320	216	-.246	.106	.134	-.709
320	217	-.282	.116	.128	-.750
320	218	-.256	.130	.168	-.701
320	219	-.442	.193	.156	-1.277
320	220	-.417	.184	.110	-1.505
320	221	-.318	.144	.074	-.984
320	222	-.360	.174	.095	-1.063
320	223	-.358	.151	.068	-1.051
320	224	-.343	.177	.176	-1.196
320	225	-.295	.135	.143	-.942
320	226	-.280	.130	.195	-.953
320	227	-.325	.116	.082	-.717
320	228	-.299	.117	.061	-.744
320	229	-.254	.109	.099	-.674
320	230	-.290	.121	.092	-.863
320	231	-.329	.124	.086	-.851
320	232	-.283	.110	.063	-.724
320	233	-.291	.152	.138	-1.016
320	234	-.289	.147	.168	-.899
320	235	-.355	.140	.103	-.902
320	236	-.290	.117	.089	-.737
320	237	-.276	.111	.070	-.801
320	238	-.263	.113	.056	-.757
320	239	-.291	.101	.034	-.634
320	240	-.302	.115	.037	-.758
320	241	-.288	.105	.066	-.708
320	242	-.335	.119	.044	-.819
320	243	-.374	.120	.047	-.914
320	244	-.331	.115	.030	-.826
320	245	-.307	.109	.043	-.829
320	247	-.298	.121	.097	-.678
320	248	-.304	.139	.124	-.953
320	249	-.323	.142	.078	-.821
320	250	-.331	.162	.265	-.918
320	251	-.379	.169	.057	-1.268
320	252	-.338	.131	.067	-.876
320	253	-.293	.111	.059	-.767
320	254	-.314	.130	.079	-.994
320	255	-.361	.120	.059	-.836
320	256	-.317	.116	.076	-.977
320	257	-.298	.100	.016	-.882
320	258	-.282	.132	.148	-1.041
320	259	-.253	.112	.173	-.689
320	260	-.266	.133	.356	-.771
320	261	-.334	.130	.072	-.917
320	262	-.367	.151	.068	-.924
320	263	-.323	.125	-.003	-1.377
320	264	-.325	.136	.046	-1.123
320	265	-.378	.140	.012	-1.197
320	266	-.263	.116	.125	-.839
320	267	-.167	.122	.349	-.641
320	268	-.256	.135	.284	-.995
320	269	-.368	.166	.218	-1.201
320	270	-.313	.145	.128	-.919
320	271	-.249	.114	.127	-.726
320	272	-.347	.153	.122	-.928
320	273	-.267	.116	.160	-.773
320	274	-.249	.119	.152	-.744
320	275	-.304	.120	.110	-.877
320	276	-.403	.154	.017	-1.260
320	277	-.233	.131	.163	-.798
320	278	-.278	.120	.114	-.809
320	279	-.184	.090	.133	-.482
320	280	-.199	.114	.196	-.661
320	281	-.441	.159	.007	-1.024
320	301	-.225	.100	.130	-.656
320	302	-.291	.110	.049	-.773
320	303	-.308	.125	.143	-.800
320	304	-.288	.118	.123	-.693
320	305	-.226	.118	.175	-.621
320	306	-.218	.105	.126	-.585
320	307	-.192	.093	.093	-.625
320	308	-.175	.116	.204	-.831
320	309	-.176	.120	.213	-.876

APPENDIX A -- PRESSURE DATA:

BASS BROTHERS BUILDING - PHASE II, DALLAS

WD	TAP	CPMEAN	CPRMS	CPMAX	CPMIN
320	310	-.248	.141	.194	-.976
320	311	-.212	.111	.186	-.712
320	312	-.202	.118	.231	-.689
320	313	-.178	.107	.166	-.642
320	314	-.196	.105	.153	-.665
320	315	-.169	.090	.132	-.517
320	316	-.252	.122	.150	-.909
320	317	-.209	.110	.146	-.990
320	318	-.204	.105	.150	-.595
320	319	-.187	.086	.119	-.479
320	320	-.182	.095	.172	-.500
320	321	-.170	.096	.154	-.499
320	322	-.169	.103	.180	-.602
320	323	-.196	.108	.168	-.656
320	324	-.255	.111	.056	-.777
320	325	-.203	.110	.120	-.612
320	326	-.182	.105	.137	-.556
320	327	-.184	.103	.161	-.570
320	328	-.186	.087	.105	-.494
320	329	-.171	.099	.158	-.546
320	330	-.195	.122	.193	-.645
320	331	-.201	.115	.145	-.586
320	332	-.314	.125	.117	-.884
320	333	-.209	.109	.141	-.609
320	334	-.195	.108	.154	-.585
320	335	-.206	.111	.152	-.667
320	336	-.205	.089	.101	-.502
320	337	-.238	.098	.099	-.626
320	338	-.188	.100	.133	-.554
320	339	-.215	.107	.129	-.711
320	340	-.286	.128	.131	-.776
320	341	-.235	.117	.138	-.673
320	342	-.179	.098	.155	-.592
320	343	-.199	.106	.142	-.594
320	344	-.204	.106	.121	-.559
320	345	-.214	.106	.114	-.620
320	346	-.178	.082	.082	-.478
320	347	-.208	.093	.083	-.528
320	348	-.227	.095	.056	-.577
320	349	-.230	.115	.179	-.666
320	350	-.200	.107	.196	-.661
320	351	-.197	.094	.124	-.497
320	352	-.215	.098	.223	-.566
320	353	-.225	.098	.118	-.676
320	354	-.186	.090	.110	-.554
320	355	-.246	.117	.123	-.870
320	356	-.210	.099	.088	-.541
320	357	-.208	.099	.091	-.565
320	358	-.196	.098	.192	-.518
320	359	-.216	.109	.179	-.581
320	360	-.224	.109	.159	-.604
320	361	-.224	.108	.150	-.601
320	362	-.153	.085	.132	-.472
320	363	-.186	.100	.216	-.524
320	364	-.196	.102	.248	-.558
320	365	-.200	.102	.253	-.561
320	366	-.203	.091	.101	-.621
320	401	-.268	.142	.212	-.753
320	402	-.391	.147	.133	-1.025
320	403	-.418	.151	.169	-1.096
320	404	-.388	.148	.052	-.915
320	405	-.374	.202	.409	-1.617
320	406	-.294	.149	.245	-.913
320	407	-.275	.161	.242	-1.051
320	408	-.355	.140	.102	-.859
320	409	-.347	.128	.010	-.879
320	410	-.340	.142	.020	-.879
320	411	-.346	.153	.034	-1.156
320	412	-.387	.168	.075	-1.367
320	413	-.343	.148	.132	-.968
320	414	-.309	.117	.055	-.764
320	415	-.298	.129	.113	-.786
320	416	-.293	.129	.121	-.815
320	417	-.315	.131	.113	-.865
320	418	-.340	.113	-.034	-.826
320	419	-.323	.125	.054	-.860
320	420	-.282	.131	.201	-.738
320	421	-.304	.143	.135	-1.191
320	422	-.264	.105	.116	-.626
320	423	-.299	.102	.050	-.645
320	424	-.295	.099	.029	-.660
320	425	-.267	.117	.158	-.685
320	426	-.283	.120	.129	-.783
320	427	-.301	.123	.109	-.794
320	428	-.315	.109	.043	-.795
320	429	-.322	.132	.046	-1.016
320	430	-.325	.108	.034	-.671
320	431	-.341	.108	.012	-.698
320	432	-.309	.100	.014	-.704
320	433	-.313	.114	.057	-.835
320	434	-.331	.117	.048	-.788
320	435	-.400	.141	.007	-1.021
320	436	-.366	.134	.067	-.939
320	437	-.263	.131	.225	-.875
320	438	-.401	.141	.043	-.871
320	439	-.415	.143	.042	-1.070
320	440	-.417	.140	.042	-.892
320	441	-.387	.130	.000	-1.017
320	442	-.324	.131	.123	-.903
320	443	-.214	.122	.252	-.805
320	444	-.255	.127	.225	-.789
320	445	-.268	.115	.137	-.670
320	446	-.271	.120	.176	-.779
320	447	-.292	.125	.105	-.925
320	448	-.269	.124	.208	-.753
320	449	-.560	.209	-.055	-1.473
320	450	-.411	.152	.055	-1.145
320	451	-.260	.145	.353	-.932
320	452	-.105	.120	.305	-.564
320	453	-.329	.143	.090	-.914
320	454	-.232	.116	.149	-.769
320	455	-.141	.132	.332	-.603
320	456	-.314	.138	.163	-1.006
320	457	-.258	.106	.077	-.612
320	458	-.239	.120	.136	-.674
320	459	-.317	.155	.132	-1.078
320	460	-.325	.139	.099	-1.011
320	461	-.222	.095	.138	-.607
320	801	-.428	.163	.087	-1.178
320	802	-.444	.155	-.017	-1.229
320	803	-.021	.117	.504	-.518
320	804	-.244	.098	.050	-.600
320	805	-.204	.109	.132	-.625
320	806	-.298	.128	.147	-.768
320	807	-.200	.116	.173	-.632
320	808	.022	.097	.360	-.429
320	809	-.237	.113	.151	-.636
320	810	-.210	.099	.142	-.603
320	901	-.229	.107	.144	-.629
320	902	-.200	.090	.066	-.582
320	903	-.220	.117	.196	-.932
320	904	-.243	.112	.107	-.709
320	905	-.146	.141	.361	-.760
320	906	-.270	.131	.152	-.820
320	907	-.173	.156	.520	-.709
320	908	-.279	.121	.030	-.942
320	909	-.388	.138	.090	-1.137
320	910	-.357	.130	.084	-.808
320	911	-.391	.171	.233	-1.163
320	912	-.442	.162	.105	-1.075
320	913	-.379	.126	.040	-.879
330	101	.052	.172	.784	-.454
330	102	.166	.161	.684	-.379
330	103	.305	.175	.982	-.399
330	104	.224	.158	.852	-.333
330	105	.037	.118	.461	-.332
330	106	-.265	.164	.334	-1.018
330	107	-.331	.163	.303	-.976
330	108	.054	.152	.660	-.426
330	109	-.195	.116	.185	-.603

APPENDIX A -- PRESSURE DATA:

BASS BROTHERS BUILDING - PHASE II, DALLAS

WD	TAP	CPMEAN	CPRMS	CPMAX	CPMIN
330	110	-.248	.131	.212	-.705
330	111	.246	.155	.807	-.356
330	112	.198	.156	.823	-.340
330	113	.160	.138	.663	-.347
330	114	.463	.174	.995	-.099
330	115	.432	.186	.999	-.158
330	116	.294	.140	.799	-.156
330	117	.117	.150	.657	-.365
330	118	.227	.158	.871	-.304
330	119	.370	.169	.955	-.141
330	120	.299	.168	.881	-.187
330	121	.345	.167	.937	-.153
330	122	.056	.132	.641	-.394
330	123	.278	.160	.835	-.214
330	124	.082	.178	.548	-.847
330	125	.326	.168	.827	-.184
330	126	.395	.146	.975	-.015
330	127	.421	.166	.985	-.048
330	128	.451	.181	1.039	-.259
330	129	.383	.179	.986	-.320
330	130	.302	.146	.857	-.260
330	131	.025	.158	.535	-.616
330	132	.313	.166	.850	-.224
330	133	.429	.161	1.052	-.028
330	134	.405	.156	.956	-.105
330	135	.444	.154	1.012	-.008
330	136	.403	.167	.932	-.108
330	137	.315	.168	.902	-.211
330	138	.207	.148	.800	-.259
330	139	.057	.135	.705	-.379
330	140	-.021	.149	.500	-.662
330	141	.269	.158	.758	-.288
330	142	.381	.150	.845	-.031
330	143	.366	.148	.891	-.073
330	144	.380	.130	.881	-.069
330	145	.343	.144	.913	-.169
330	146	.258	.147	.842	-.236
330	147	.173	.132	.695	-.283
330	148	.088	.105	.442	-.267
330	149	-.070	.146	.524	-.549
330	150	.211	.151	.946	-.241
330	151	.367	.125	.834	-.079
330	152	.342	.162	.884	-.083
330	153	.302	.135	.749	-.164
330	154	.244	.137	.700	-.214
330	155	.260	.133	.708	-.187
330	156	.020	.129	.499	-.412
330	157	.279	.145	.784	-.545
330	158	.370	.153	.905	-.115
330	159	.363	.154	.884	-.124
330	160	.331	.132	.844	-.114
330	161	.303	.145	.888	-.210
330	162	.218	.148	.843	-.290
330	163	.162	.139	.784	-.299
330	164	.078	.111	.469	-.325
330	165	-.056	.151	.414	-.737
330	166	.186	.144	.711	-.272
330	167	.240	.136	.727	-.169
330	168	.229	.113	.568	-.183
330	169	.186	.123	.600	-.235
330	170	.063	.119	.467	-.348
330	171	-.064	.116	.328	-.568
330	172	-.023	.096	.304	-.408
330	173	-.058	.114	.362	-.561
330	174	.275	.147	1.015	-.130
330	176	-.698	.198	-.180	-1.454
330	177	-.250	.164	.251	-1.212
330	178	.164	.131	.730	-.247
330	179	.359	.159	1.166	-.115
330	180	.130	.133	.729	-.324
330	181	-.240	.168	.455	-1.021
330	182	-.257	.268	.401	-1.963
330	183	-.098	.192	.495	-1.125
330	184	-.006	.110	.368	-.531
330	185	-.046	.121	.378	-.587
330	186	-.002	.122	.536	-.455
330	187	.047	.107	.414	-.394
330	188	.129	.099	.480	-.270
330	189	.180	.146	.620	-.435
330	190	.095	.159	.613	-.705
330	191	-.234	.113	.238	-.676
330	192	-.176	.106	.200	-.586
330	193	.068	.105	.450	-.286
330	194	.095	.122	.519	-.441
330	195	.222	.127	.723	-.150
330	196	.287	.113	.691	-.132
330	197	.119	.127	.713	-.331
330	198	-.134	.115	.382	-.481
330	201	-.207	.125	.201	-.694
330	202	-.261	.128	.167	-.797
330	203	-.253	.138	.246	-.787
330	204	-.318	.136	.230	-1.140
330	205	-.356	.139	.135	-1.037
330	206	-.709	.168	-.144	-1.289
330	207	-.617	.149	-.128	-1.195
330	208	-.212	.133	.228	-.760
330	209	-.144	.171	.513	-1.024
330	210	-.201	.188	.592	-.958
330	211	-.788	.357	.261	-1.818
330	212	-.435	.132	-.036	-.906
330	213	-.464	.142	-.046	-.964
330	214	-.539	.146	-.086	-1.063
330	215	-.566	.232	.057	-1.496
330	216	-.288	.137	.225	-1.104
330	217	-.356	.148	.236	-1.063
330	218	-.407	.159	.204	-1.145
330	219	-.498	.280	.444	-1.508
330	220	-.541	.273	.245	-1.497
330	221	-.534	.149	-.077	-1.247
330	222	-.563	.165	-.052	-1.403
330	223	-.592	.198	.012	-1.414
330	224	-.331	.182	.207	-1.159
330	225	-.300	.155	.260	-1.012
330	226	-.297	.157	.381	-.908
330	227	-.373	.142	.187	-.961
330	228	-.405	.152	.063	-1.102
330	229	-.369	.124	.026	-.881
330	230	-.387	.132	.004	-.911
330	231	-.440	.139	-.006	-.959
330	232	-.390	.126	-.030	-.848
330	233	-.323	.164	.146	-1.120
330	234	-.321	.174	.312	-1.203
330	235	-.396	.167	.172	-1.055
330	236	-.343	.136	.151	-.846
330	237	-.353	.137	.045	-.930
330	238	-.334	.133	.048	-.873
330	239	-.346	.107	-.010	-.764
330	240	-.374	.129	.038	-.816
330	241	-.348	.112	.013	-.932
330	242	-.383	.134	.074	-1.046
330	243	-.425	.129	-.024	-.966
330	244	-.381	.123	.008	-.864
330	245	-.399	.144	.151	-1.535
330	247	-.342	.125	.053	-.828
330	248	-.323	.150	.120	-1.013
330	249	-.328	.156	.161	-1.010
330	250	-.343	.180	.269	-1.248
330	251	-.406	.171	.042	-1.316
330	252	-.388	.147	.230	-.963
330	253	-.378	.132	.045	-1.012
330	254	-.402	.150	.122	-1.233
330	255	-.451	.140	.035	-.951
330	256	-.403	.135	.068	-.984
330	257	-.345	.115	.011	-.898
330	258	-.301	.136	.089	-.896
330	259	-.232	.126	.225	-.747
330	260	-.253	.152	.431	-.893
330	261	-.341	.140	.330	-.890
330	262	-.403	.154	.058	-1.512
330	263	-.372	.134	.029	-.906

APPENDIX A -- PRESSURE DATA: BASS BROTHERS BUILDING - PHASE II, DALLAS

WD	TAP	CPMEAN	CPRMS	CPMAX	CPMIN
330	264	-.385	.148	.014	-1.031
330	265	-.442	.151	-.022	-1.094
330	266	-.287	.122	.067	-.730
330	267	-.123	.135	.378	-.742
330	268	-.254	.148	.270	-.853
330	269	-.409	.164	.121	-1.097
330	270	-.395	.153	.133	-1.238
330	271	-.243	.111	.071	-.695
330	272	-.397	.165	.048	-1.104
330	273	-.286	.114	.087	-.691
330	274	-.250	.112	.107	-.657
330	275	-.297	.115	.038	-.751
330	276	-.396	.145	.006	-1.018
330	277	-.194	.120	.184	-.642
330	278	-.290	.117	.059	-.742
330	279	-.208	.096	.153	-.613
330	280	-.221	.118	.186	-.631
330	281	-.500	.167	-.022	-1.116
330	301	-.195	.109	.131	-.605
330	302	-.271	.126	.136	-.754
330	303	-.282	.134	.162	-.820
330	304	-.267	.119	.111	-.945
330	305	-.224	.112	.139	-.637
330	306	-.212	.109	.159	-.617
330	307	-.192	.095	.150	-.546
330	308	-.184	.119	.236	-.631
330	309	-.180	.120	.248	-.601
330	310	-.247	.128	.158	-.951
330	311	-.214	.105	.093	-.845
330	312	-.207	.113	.140	-.822
330	313	-.171	.101	.134	-.588
330	314	-.187	.102	.122	-.612
330	315	-.172	.095	.155	-.478
330	316	-.247	.119	.216	-.705
330	317	-.191	.111	.179	-.609
330	318	-.191	.108	.186	-.633
330	319	-.176	.086	.173	-.519
330	320	-.174	.097	.240	-.552
330	321	-.176	.108	.158	-.548
330	322	-.185	.110	.203	-.576
330	323	-.208	.115	.165	-.649
330	324	-.271	.101	.068	-.591
330	325	-.213	.107	.118	-.555
330	326	-.191	.104	.118	-.544
330	327	-.195	.103	.103	-.550
330	328	-.185	.086	.145	-.487
330	329	-.187	.100	.166	-.574
330	330	-.243	.130	.142	-.706
330	331	-.237	.122	.140	-.761
330	332	-.343	.123	.065	-.759

WD	TAP	CPMEAN	CPRMS	CPMAX	CPMIN
330	333	-.228	.102	.293	-.665
330	334	-.204	.100	.154	-.682
330	335	-.205	.099	.165	-.622
330	336	-.201	.090	.087	-.528
330	337	-.265	.100	.052	-.596
330	338	-.219	.101	.127	-.582
330	339	-.244	.108	.111	-.662
330	340	-.296	.119	.045	-.711
330	341	-.276	.117	.152	-.708
330	342	-.321	.099	.034	-.691
330	343	-.229	.100	.116	-.596
330	344	-.221	.098	.102	-.566
330	345	-.244	.099	.086	-.625
330	346	-.332	.103	.069	-.675
330	347	-.242	.106	.155	-.612
330	348	-.242	.108	.146	-.610
330	349	-.249	.113	.065	-.638
330	350	-.224	.109	.108	-.623
330	351	-.229	.104	.137	-.617
330	352	-.240	.107	.120	-.690
330	353	-.257	.108	.195	-.765
330	354	-.338	.106	.069	-.736
330	355	-.256	.111	.084	-.674
330	356	-.236	.106	.172	-.656
330	357	-.249	.108	.144	-.737
330	358	-.347	.101	.009	-.791
330	359	-.258	.103	.106	-.705
330	360	-.245	.104	.121	-.708
330	361	-.257	.105	.104	-.723
330	362	-.192	.094	.104	-.570
330	363	-.244	.115	.127	-.671
330	364	-.235	.117	.140	-.684
330	365	-.249	.117	.092	-.655
330	366	-.336	.102	-.009	-.757
330	401	-.343	.136	.158	-.873
330	402	-.395	.146	.085	-.940
330	403	-.354	.130	.062	-1.011
330	404	-.343	.119	.038	-.811
330	405	-.365	.158	.133	-1.120
330	406	-.267	.139	.130	-.993
330	407	-.274	.153	.329	-1.034
330	408	-.279	.114	.060	-.720
330	409	-.268	.099	.162	-.675
330	410	-.263	.110	.228	-.724
330	411	-.260	.111	.229	-.746
330	412	-.310	.125	.186	-.828
330	413	-.333	.131	.053	-.871
330	414	-.269	.090	.028	-.576
330	415	-.270	.102	.051	-.659
330	416	-.265	.103	.057	-.644

WD	TAP	CPMEAN	CPRMS	CPMAX	CPMIN
330	417	-.286	.105	.031	-.731
330	418	-.292	.092	.020	-.593
330	419	-.308	.105	-.002	-.701
330	420	-.326	.121	.017	-.757
330	421	-.350	.126	.010	-.868
330	422	-.275	.094	.078	-.570
330	423	-.301	.103	.068	-.655
330	424	-.376	.103	.070	-.770
330	425	-.279	.103	.070	-.602
330	426	-.282	.104	.089	-.606
330	427	-.310	.107	.042	-.695
330	428	-.325	.109	.035	-.698
330	429	-.327	.125	.086	-1.004
330	430	-.310	.111	.105	-.758
330	431	-.330	.111	.080	-.789
330	432	-.294	.097	.031	-.639
330	433	-.288	.107	.062	-.680
330	434	-.300	.110	.067	-.710
330	435	-.347	.118	.021	-.820
330	436	-.381	.125	-.002	-.827
330	437	-.309	.127	.115	-.823
330	438	-.358	.122	.063	-.755
330	439	-.346	.122	.072	-.776
330	440	-.360	.123	.063	-.777
330	441	-.453	.122	-.116	-.937
330	442	-.361	.126	.013	-.972
330	443	-.263	.126	.219	-.674
330	444	-.296	.124	.165	-.821
330	445	-.394	.112	.002	-.800
330	446	-.326	.114	.053	-.765
330	447	-.302	.114	.085	-.831
330	448	-.314	.119	.105	-.794
330	449	-.605	.216	-.058	-1.633
330	450	-.432	.142	.041	-1.028
330	451	-.296	.132	.261	-.812
330	452	-.156	.127	.268	-.752
330	453	-.357	.146	.067	-1.188
330	454	-.302	.121	.106	-.826
330	455	-.216	.150	.406	-.807
330	456	-.345	.144	.069	-1.065
330	457	-.348	.112	.071	-.793
330	458	-.306	.116	.119	-.738
330	459	-.353	.148	.101	-1.010
330	460	-.387	.138	.032	-.974
330	461	-.292	.103	.060	-.649
330	801	-.466	.156	.013	-1.359
330	802	-.425	.148	.012	-1.062
330	803	-.006	.117	.512	-.458
330	804	-.283	.104	.005	-.800
330	805	-.244	.110	.073	-.744

APPENDIX A -- PRESSURE DATA:

BASS BROTHERS BUILDING - PHASE II, DALLAS

WD	TAP	CPMEAN	CPRMS	CPMAX	CPMIN
330	806	-.318	.134	.032	-.977
330	807	-.209	.116	.205	-.664
330	808	.072	.095	.397	-.227
330	809	-.283	.112	.049	-.705
330	810	-.251	.101	.062	-.668
330	901	-.269	.118	.122	-.769
330	902	-.219	.094	.105	-.520
330	903	-.193	.125	.202	-.690
330	904	-.251	.125	.154	-.737
330	905	-.182	.120	.249	-.733
330	906	-.268	.127	.114	-.705
330	907	-.230	.123	.225	-.777
330	908	-.269	.113	.054	-.785
330	909	-.329	.110	.049	-.693
330	910	-.407	.128	.105	-.995
330	911	-.362	.140	.240	-.907
330	912	-.353	.123	.074	-.815
330	913	-.504	.137	-.101	-1.021
340	101	.040	.167	.749	-.494
340	102	.266	.164	.837	-.215
340	103	.284	.163	.861	-.387
340	104	.194	.143	.656	-.386
340	105	.008	.106	.388	-.348
340	106	-.288	.140	.243	-.981
340	107	-.361	.149	.174	-1.025
340	108	.012	.135	.544	-.413
340	109	-.176	.107	.218	-.543
340	110	-.217	.123	.228	-.669
340	111	.246	.167	.845	-.301
340	112	.164	.158	.644	-.355
340	113	.283	.154	.803	-.283
340	114	.452	.171	.991	-.209
340	115	.389	.178	1.086	-.244
340	116	.229	.132	.679	-.264
340	117	.249	.172	.844	-.316
340	118	.315	.177	.959	-.235
340	119	.377	.167	.968	-.177
340	120	.288	.171	.925	-.315
340	121	.330	.170	1.015	-.200
340	122	-.003	.139	.458	-.490
340	123	.241	.153	.789	-.343
340	124	.205	.203	.952	-.593
340	125	.374	.178	1.006	-.212
340	126	.417	.153	.920	-.119
340	127	.405	.158	.968	-.131
340	128	.398	.175	.995	-.127
340	129	.289	.181	.922	-.322
340	130	.278	.144	.711	-.363
340	131	.059	.167	.703	-.652
340	132	.357	.175	.918	-.188
340	133	.461	.170	1.046	-.160
340	134	.435	.162	.943	-.060
340	135	.430	.140	.913	-.006
340	136	.385	.153	.909	-.125
340	137	.289	.157	.894	-.278
340	138	.193	.141	.737	-.340
340	139	.061	.130	.649	-.313
340	140	.051	.153	.738	-.826
340	141	.284	.156	.999	-.325
340	142	.362	.149	.965	-.089
340	143	.399	.159	.954	-.165
340	144	.384	.144	.902	-.048
340	145	.341	.158	.947	-.125
340	146	.247	.161	.911	-.206
340	147	.163	.147	.795	-.263
340	148	.087	.103	.445	-.333
340	149	-.009	.160	.547	-.589
340	150	.248	.152	.721	-.230
340	151	.370	.125	.814	.042
340	152	.298	.157	.915	-.182
340	153	.307	.149	.960	-.122
340	154	.239	.153	.901	-.183
340	155	.259	.148	.909	-.167
340	156	.080	.139	.662	-.456
340	157	.297	.141	.961	-.194
340	158	.367	.141	.819	-.076
340	159	.361	.142	.840	-.090
340	160	.332	.119	.793	-.063
340	161	.296	.132	.783	-.114
340	162	.197	.136	.670	-.260
340	163	.142	.129	.604	-.293
340	164	.051	.113	.570	-.402
340	165	-.018	.149	.494	-.658
340	166	.192	.136	.683	-.236
340	167	.236	.132	.697	-.247
340	168	.210	.119	.749	-.166
340	169	.171	.131	.749	-.198
340	170	.053	.130	.636	-.354
340	171	-.060	.123	.376	-.592
340	172	-.028	.098	.359	-.424
340	173	-.067	.114	.381	-.548
340	174	.228	.146	1.024	-.233
340	176	-.609	.177	-.153	-1.187
340	177	-.216	.170	.449	-.790
340	178	.190	.139	.952	-.208
340	179	.372	.160	1.188	-.064
340	180	.126	.134	.739	-.470
340	181	-.253	.170	.294	-.924
340	182	-.214	.238	.400	-1.488
340	183	-.098	.180	.480	-.994
340	184	-.025	.109	.385	-.426
340	185	-.052	.118	.352	-.534
340	186	.012	.109	.445	-.460
340	187	.063	.097	.422	-.375
340	188	.120	.090	.473	-.223
340	189	.155	.135	.655	-.500
340	190	.061	.150	.653	-.533
340	191	-.165	.115	.215	-.605
340	192	-.140	.113	.212	-.611
340	193	.092	.102	.437	-.259
340	194	.120	.117	.529	-.444
340	195	.232	.125	.663	-.143
340	196	.265	.118	.672	-.105
340	197	.104	.131	.612	-.294
340	198	-.145	.116	.331	-.485
340	201	-.183	.124	.197	-.662
340	202	-.242	.130	.175	-.846
340	203	-.185	.142	.239	-.908
340	204	-.215	.152	.263	-.828
340	205	-.289	.138	.194	-.843
340	206	-.599	.186	.062	-1.248
340	207	-.541	.142	-.113	-1.091
340	208	-.213	.130	.231	-.852
340	209	-.055	.200	.791	-.824
340	210	-.099	.229	.703	-.813
340	211	-.437	.390	.370	-1.741
340	212	-.384	.140	.019	-1.009
340	213	-.410	.146	.001	-1.044
340	214	-.497	.148	-.104	-1.173
340	215	-.307	.250	.457	-1.331
340	216	-.173	.143	.438	-.711
340	217	-.283	.146	.209	-.903
340	218	-.379	.162	.190	-1.166
340	219	-.210	.316	.591	-1.525
340	220	-.350	.358	.548	-1.810
340	221	-.457	.142	-.084	-1.073
340	222	-.443	.149	-.001	-1.119
340	223	-.539	.180	-.067	-1.550
340	224	-.290	.133	.140	-.793
340	225	-.131	.153	.329	-.737
340	226	-.081	.208	.649	-.841
340	227	-.197	.201	.627	-.931
340	228	-.316	.181	.294	-.984
340	229	-.406	.165	.174	-1.012
340	230	-.430	.169	.259	-1.168
340	231	-.520	.176	.010	-1.306
340	232	-.468	.161	.037	-1.249
340	233	-.291	.118	.112	-.874
340	234	-.212	.177	.466	-1.068
340	235	-.274	.200	.407	-1.026

APPENDIX A -- PRESSURE DATA: BASS BROTHERS BUILDING - PHASE II, DALLAS

WD	TAP	CPMEAN	CPRMS	CPMAX	CPMIN
340	236	-.266	.164	.327	-.942
340	237	-.315	.159	.236	-.931
340	238	-.335	.148	.131	-.869
340	239	-.400	.131	.094	-.945
340	240	-.388	.136	.052	-.907
340	241	-.359	.115	.009	-1.000
340	242	-.374	.146	.289	-1.037
340	243	-.427	.133	.101	-1.027
340	244	-.381	.126	.044	-.952
340	245	-.380	.146	.128	-.930
340	247	-.376	.148	.225	-1.097
340	248	-.305	.123	.088	-.953
340	249	-.272	.159	.204	-.892
340	250	-.258	.215	.459	-1.113
340	251	-.347	.218	.332	-1.468
340	252	-.364	.171	.320	-1.099
340	253	-.377	.146	.173	-1.066
340	254	-.400	.159	.156	-1.141
340	255	-.463	.142	-.007	-1.115
340	256	-.415	.137	-.005	-1.028
340	257	-.384	.119	-.052	-.906
340	258	-.344	.129	.078	-1.094
340	259	-.148	.130	.424	-.722
340	260	-.139	.170	.449	-.733
340	261	-.244	.159	.315	-.767
340	262	-.334	.172	.205	-1.130
340	263	-.313	.151	.103	-1.034
340	264	-.369	.158	.109	-1.099
340	265	-.430	.162	.051	-1.182
340	266	-.323	.125	.033	-.916
340	267	-.106	.130	.419	-.523
340	268	-.154	.161	.363	-.802
340	269	-.364	.188	.199	-1.225
340	270	-.405	.177	.097	-1.441
340	271	-.213	.100	.067	-.674
340	272	-.381	.151	.116	-1.005
340	273	-.311	.100	.057	-.674
340	274	-.232	.100	.086	-.636
340	275	-.234	.119	.120	-.619
340	276	-.325	.147	.111	-.869
340	277	-.151	.115	.246	-.612
340	278	-.311	.114	.032	-.701
340	279	-.206	.085	.081	-.509
340	280	-.169	.108	.165	-.538
340	281	-.401	.158	.049	-.962
340	301	-.190	.104	.158	-.663
340	302	-.268	.118	.153	-.775
340	303	-.270	.116	.099	-.767
340	304	-.237	.101	.068	-.615
340	305	-.212	.107	.132	-.610

WD	TAP	CPMEAN	CPRMS	CPMAX	CPMIN
340	306	-.215	.101	.100	-.581
340	307	-.180	.097	.132	-.552
340	308	-.195	.116	.215	-.600
340	309	-.184	.116	.235	-.581
340	310	-.227	.120	.122	-.835
340	311	-.201	.094	.145	-.618
340	312	-.205	.103	.165	-.587
340	313	-.169	.093	.160	-.516
340	314	-.187	.094	.148	-.541
340	315	-.165	.088	.081	-.467
340	316	-.213	.101	.152	-.531
340	317	-.186	.097	.159	-.500
340	318	-.197	.097	.125	-.512
340	319	-.168	.083	.160	-.440
340	320	-.180	.094	.169	-.488
340	321	-.188	.099	.133	-.592
340	322	-.178	.101	.188	-.518
340	323	-.188	.101	.170	-.551
340	324	-.229	.089	.172	-.521
340	325	-.223	.100	.215	-.620
340	326	-.208	.098	.205	-.541
340	327	-.220	.098	.198	-.553
340	328	-.207	.093	.128	-.581
340	329	-.216	.104	.145	-.619
340	330	-.252	.120	.154	-.703
340	331	-.241	.115	.172	-.725
340	332	-.374	.107	.002	-.811
340	333	-.232	.101	.060	-.578
340	334	-.214	.100	.084	-.548
340	335	-.218	.100	.064	-.544
340	336	-.213	.081	.068	-.532
340	337	-.278	.100	.009	-.632
340	338	-.240	.094	.118	-.589
340	339	-.243	.107	.107	-.653
340	340	-.340	.107	.021	-.726
340	341	-.320	.106	.032	-.697
340	342	-.296	.095	.026	-.643
340	343	-.284	.103	.070	-.622
340	344	-.290	.104	.044	-.622
340	345	-.290	.102	.037	-.622
340	346	-.292	.094	-.014	-.620
340	347	-.285	.105	.026	-.649
340	348	-.299	.107	.012	-.684
340	349	-.279	.106	.053	-.632
340	350	-.257	.103	.030	-.612
340	351	-.281	.105	.058	-.760
340	352	-.308	.107	.030	-.784
340	353	-.307	.107	.018	-.803
340	354	-.282	.096	.012	-.588
340	355	-.300	.107	-.001	-.770

WD	TAP	CPMEAN	CPRMS	CPMAX	CPMIN
340	356	-.294	.102	.027	-.616
340	357	-.290	.101	.020	-.604
340	358	-.284	.102	.018	-.651
340	359	-.265	.112	.051	-.677
340	360	-.276	.114	.050	-.690
340	361	-.272	.115	.067	-.670
340	362	-.229	.095	.107	-.625
340	363	-.277	.100	.043	-.677
340	364	-.287	.100	.039	-.629
340	365	-.286	.100	.038	-.658
340	366	-.295	.105	.103	-.773
340	401	-.314	.121	.121	-.751
340	402	-.362	.139	.127	-.868
340	403	-.275	.111	.079	-.669
340	404	-.264	.104	.071	-.692
340	405	-.334	.138	.100	-1.103
340	406	-.233	.121	.137	-.913
340	407	-.232	.131	.141	-.931
340	408	-.216	.106	.129	-.619
340	409	-.211	.092	.095	-.544
340	410	-.214	.102	.134	-.585
340	411	-.204	.102	.109	-.564
340	412	-.242	.107	.107	-.765
340	413	-.304	.113	.088	-.787
340	414	-.205	.077	.052	-.452
340	415	-.210	.089	.085	-.531
340	416	-.201	.089	.092	-.525
340	417	-.224	.090	.064	-.551
340	418	-.212	.091	.163	-.584
340	419	-.230	.104	.202	-.616
340	420	-.241	.111	.146	-.631
340	421	-.271	.115	.110	-.725
340	422	-.223	.081	.014	-.524
340	423	-.288	.106	.078	-.681
340	424	-.307	.097	.043	-.652
340	425	-.235	.092	.035	-.550
340	426	-.237	.091	.023	-.553
340	427	-.266	.095	.028	-.603
340	428	-.282	.099	.044	-.637
340	429	-.294	.114	.037	-.767
340	430	-.251	.102	.104	-.595
340	431	-.270	.104	.083	-.600
340	432	-.255	.088	.093	-.553
340	433	-.253	.098	.137	-.597
340	434	-.256	.098	.140	-.622
340	435	-.283	.099	.102	-.652
340	436	-.310	.093	-.029	-.717
340	437	-.298	.099	.033	-.654
340	438	-.315	.116	.050	-.802
340	439	-.324	.116	.062	-.768

APPENDIX A -- PRESSURE DATA:

BASS BROTHERS BUILDING - PHASE II, DALLAS

WD	TAP	CPMEAN	CPRMS	CPMAX	CPMIN
340	440	-.324	.115	.063	-.740
340	441	-.376	.114	.096	-.838
340	442	-.341	.125	.172	-.898
340	443	-.321	.122	.154	-.822
340	444	-.322	.123	.139	-.872
340	445	-.368	.104	-.039	-.717
340	446	-.328	.111	.023	-.716
340	447	-.335	.113	.027	-.750
340	448	-.337	.115	.006	-.748
340	449	-.449	.146	-.076	-1.203
340	450	-.394	.130	.009	-1.002
340	451	-.328	.131	.044	-.884
340	452	-.249	.120	.202	-.736
340	453	-.384	.145	.071	-.984
340	454	-.295	.119	.089	-.780
340	455	-.262	.146	.211	-.887
340	456	-.406	.148	.073	-1.163
340	457	-.370	.104	-.006	-.810
340	458	-.318	.112	.090	-.771
340	459	-.388	.148	.100	-1.143
340	460	-.396	.133	.015	-.966
340	461	-.348	.104	-.000	-.736
340	801	-.456	.160	.131	-1.130
340	802	-.390	.140	.070	-1.001
340	803	-.012	.120	.369	-.477
340	804	-.358	.101	-.048	-.656
340	805	-.286	.111	.039	-.655
340	806	-.402	.133	-.056	-.917
340	807	-.229	.118	.202	-.601
340	808	.033	.103	.451	-.340
340	809	-.227	.134	.170	-.732
340	810	-.294	.113	.096	-.744
340	901	-.293	.107	.080	-.730
340	902	-.266	.084	.001	-.697
340	903	-.126	.113	.281	-.534
340	904	-.248	.111	.087	-.683
340	905	-.217	.109	.175	-.729
340	906	-.264	.115	.144	-.793
340	907	-.230	.110	.111	-.877
340	908	-.289	.116	.042	-.845
340	909	-.270	.102	.062	-.665
340	910	-.368	.122	.043	-.775
340	911	-.301	.121	.124	-.874
340	912	-.283	.106	.085	-.627
340	913	-.497	.133	-.029	-1.056
350	101	.013	.161	.587	-.462
350	102	.327	.177	.960	-.295
350	103	.163	.166	.723	-.457
350	104	.107	.140	.577	-.397
350	105	-.025	.107	.371	-.440

WD	TAP	CPMEAN	CPRMS	CPMAX	CPMIN
350	106	-.280	.122	.244	-.852
350	107	-.363	.132	.163	-1.042
350	108	-.046	.137	.423	-.532
350	109	-.178	.108	.194	-.505
350	110	-.223	.126	.209	-.593
350	111	.239	.173	.823	-.307
350	112	.069	.140	.665	-.358
350	113	.396	.165	1.063	-.096
350	114	.399	.173	1.034	-.124
350	115	.308	.184	1.016	-.303
350	116	.164	.128	.646	-.339
350	117	.384	.180	.916	-.264
350	118	.411	.187	.944	-.224
350	119	.388	.170	.960	-.092
350	120	.280	.170	.882	-.185
350	121	.325	.171	1.049	-.124
350	122	-.080	.130	.357	-.530
350	123	.219	.161	.889	-.442
350	124	.354	.188	1.010	-.316
350	125	.411	.168	1.131	-.115
350	126	.424	.144	.946	.038
350	127	.399	.162	.955	-.124
350	128	.361	.178	.983	-.268
350	129	.182	.192	.751	-.567
350	130	.170	.144	.679	-.322
350	131	.271	.176	.955	-.374
350	132	.401	.173	1.068	-.198
350	133	.458	.168	1.025	-.023
350	134	.437	.165	1.049	-.148
350	135	.452	.155	.992	.013
350	136	.389	.165	.980	-.055
350	137	.283	.167	.820	-.189
350	138	.175	.144	.650	-.242
350	139	.011	.126	.419	-.420
350	140	.196	.173	.822	-.398
350	141	.362	.180	.958	-.313
350	142	.409	.169	1.042	-.245
350	143	.403	.165	.954	-.039
350	144	.416	.136	.999	.049
350	145	.356	.145	.977	-.072
350	146	.246	.148	.898	-.205
350	147	.143	.134	.714	-.288
350	148	.056	.112	.431	-.292
350	149	.109	.165	.690	-.496
350	150	.269	.156	.807	-.188
350	151	.370	.126	.864	.001
350	152	.323	.146	.915	-.109
350	153	.270	.140	.755	-.126
350	154	.199	.145	.696	-.209
350	155	.220	.140	.691	-.177

WD	TAP	CPMEAN	CPRMS	CPMAX	CPMIN
350	156	.219	.151	.840	-.245
350	157	.335	.155	.843	-.218
350	158	.365	.143	.883	.003
350	159	.362	.146	.888	-.011
350	160	.343	.119	.747	.002
350	161	.295	.132	.737	-.146
350	162	.183	.136	.683	-.252
350	163	.119	.130	.639	-.276
350	164	.014	.108	.412	-.322
350	165	.113	.155	.607	-.461
350	166	.216	.130	.703	-.136
350	167	.222	.121	.639	-.120
350	168	.218	.110	.597	-.185
350	169	.173	.121	.560	-.230
350	170	.045	.123	.482	-.359
350	171	-.057	.119	.362	-.474
350	172	-.035	.086	.328	-.364
350	173	-.081	.101	.348	-.427
350	174	.233	.131	.829	-.187
350	176	-.530	.163	-.136	-1.071
350	177	-.036	.162	.472	-.759
350	178	.220	.143	.664	-.213
350	179	.330	.158	.909	-.141
350	180	.095	.132	.602	-.484
350	181	-.319	.194	.269	-1.080
350	182	-.123	.220	.631	-1.805
350	183	-.102	.182	.506	-1.267
350	184	-.067	.110	.297	-.495
350	185	-.086	.118	.347	-.505
350	186	.036	.104	.402	-.486
350	187	.070	.098	.377	-.309
350	188	.132	.086	.542	-.166
350	189	.159	.123	.658	-.283
350	190	.059	.140	.569	-.536
350	191	-.080	.106	.269	-.465
350	192	-.011	.102	.387	-.404
350	193	.117	.105	.511	-.218
350	194	.120	.119	.521	-.317
350	195	.182	.130	.585	-.222
350	196	.220	.114	.591	-.079
350	197	.046	.125	.652	-.339
350	198	-.174	.111	.346	-.623
350	201	-.194	.120	.227	-.723
350	202	-.262	.131	.176	-.846
350	203	-.162	.141	.419	-.724
350	204	-.095	.141	.405	-.705
350	205	-.196	.139	.268	-.904
350	206	-.329	.235	.289	-1.132
350	207	-.400	.171	.342	-.960
350	208	-.209	.123	.284	-.720

APPENDIX A -- PRESSURE DATA: BASS BROTHERS BUILDING - PHASE II, DALLAS

WD	TAP	CPMEAN	CPRMS	CPMAX	CPMIN
350	209	-.020	.192	.716	-.780
350	210	-.059	.222	.876	-.737
350	211	-.000	.252	.634	-1.423
350	212	-.247	.118	.134	-.781
350	213	-.283	.125	.120	-.837
350	214	-.379	.131	.053	-.931
350	215	-.048	.210	.688	-.917
350	216	.013	.157	.574	-.620
350	217	-.113	.159	.392	-.790
350	218	-.237	.163	.289	-.867
350	219	.069	.250	.673	-1.302
350	220	.055	.257	.807	-1.226
350	221	-.348	.139	.119	-.901
350	222	-.344	.150	.186	-.941
350	223	-.428	.173	.157	-1.189
350	224	-.329	.138	.106	-1.000
350	225	-.025	.125	.408	-.558
350	226	.106	.174	.646	-.584
350	227	.062	.203	.689	-.737
350	228	-.042	.194	.539	-.754
350	229	-.155	.199	.412	-.898
350	230	-.224	.218	.393	-1.111
350	231	-.357	.206	.317	-1.266
350	232	-.309	.181	.231	-1.062
350	233	-.306	.119	.032	-.776
350	234	-.067	.147	.424	-.714
350	235	-.050	.187	.627	-.711
350	236	-.031	.191	.595	-.804
350	237	-.124	.195	.390	-.836
350	238	-.197	.191	.363	-.750
350	239	-.236	.166	.233	-.922
350	240	-.307	.153	.284	-.975
350	241	-.267	.138	.448	-.851
350	242	-.253	.182	.441	-1.082
350	243	-.338	.159	.431	-1.274
350	244	-.294	.145	.478	-.995
350	245	-.212	.211	.386	-1.161
350	247	-.223	.183	.297	-1.013
350	248	-.345	.122	.026	-.856
350	249	-.166	.136	.273	-.701
350	250	-.072	.199	.509	-1.007
350	251	-.110	.204	.447	-1.023
350	252	-.174	.193	.396	-.951
350	253	-.181	.163	.353	-.813
350	254	-.199	.195	.425	-1.023
350	255	-.326	.164	.300	-.881
350	256	-.290	.150	.275	-.841
350	257	-.260	.138	.329	-.902
350	258	-.394	.132	.013	-1.051
350	259	-.112	.118	.290	-.519

WD	TAP	CPMEAN	CPRMS	CPMAX	CPMIN
350	260	-.052	.157	.438	-.658
350	261	-.097	.177	.402	-.699
350	262	-.144	.173	.319	-.793
350	263	-.137	.149	.245	-.725
350	264	-.233	.167	.273	-1.026
350	265	-.304	.164	.232	-1.171
350	266	-.373	.122	-.019	-.939
350	267	-.137	.106	.381	-.451
350	268	-.048	.148	.384	-.584
350	269	-.192	.171	.304	-.899
350	270	-.210	.177	.327	-1.329
350	271	-.169	.092	.109	-.580
350	272	-.228	.161	.186	-.982
350	273	-.276	.102	.071	-.610
350	274	-.153	.103	.193	-.456
350	275	-.109	.107	.236	-.531
350	276	-.185	.132	.256	-.716
350	277	-.066	.106	.261	-.429
350	278	-.320	.108	.061	-.767
350	279	-.186	.080	.113	-.486
350	280	-.094	.107	.346	-.551
350	281	-.279	.146	.268	-.839
350	301	-.201	.100	.152	-.593
350	302	-.276	.110	.140	-.658
350	303	-.281	.106	.086	-.751
350	304	-.256	.104	.076	-.635
350	305	-.237	.110	.128	-.713
350	306	-.201	.108	.154	-.666
350	307	-.184	.098	.158	-.575
350	308	-.193	.113	.155	-.675
350	309	-.181	.113	.158	-.674
350	310	-.243	.118	.214	-.827
350	311	-.223	.095	.076	-.757
350	312	-.224	.105	.125	-.692
350	313	-.179	.098	.151	-.592
350	314	-.199	.098	.102	-.605
350	315	-.178	.093	.219	-.488
350	316	-.218	.107	.255	-.644
350	317	-.199	.103	.193	-.631
350	318	-.210	.102	.225	-.647
350	319	-.189	.088	.113	-.490
350	320	-.195	.098	.151	-.526
350	321	-.194	.093	.239	-.524
350	322	-.185	.101	.129	-.514
350	323	-.194	.102	.136	-.504
350	324	-.243	.092	.039	-.575
350	325	-.234	.099	.104	-.538
350	326	-.216	.097	.097	-.524
350	327	-.225	.099	.076	-.552
350	328	-.233	.085	.020	-.569

WD	TAP	CPMEAN	CPRMS	CPMAX	CPMIN
350	329	-.235	.096	.051	-.608
350	330	-.257	.108	.051	-.625
350	331	-.244	.105	.064	-.609
350	332	-.359	.104	-.021	-.736
350	333	-.253	.093	.076	-.571
350	334	-.234	.092	.088	-.599
350	335	-.239	.091	.108	-.564
350	336	-.236	.082	.027	-.524
350	337	-.308	.092	-.049	-.612
350	338	-.267	.088	.027	-.588
350	339	-.258	.097	.038	-.618
350	340	-.336	.099	-.018	-.694
350	341	-.334	.098	.019	-.644
350	342	-.438	.098	-.103	-.821
350	343	-.303	.098	.019	-.600
350	344	-.299	.099	.020	-.602
350	345	-.304	.097	-.001	-.632
350	346	-.438	.098	-.130	-.831
350	347	-.305	.098	.035	-.705
350	348	-.306	.100	.058	-.730
350	349	-.313	.105	.055	-.659
350	350	-.292	.103	.070	-.644
350	351	-.280	.108	.090	-.668
350	352	-.302	.109	.084	-.721
350	353	-.305	.111	.070	-.714
350	354	-.407	.103	-.026	-.701
350	355	-.332	.108	.027	-.686
350	356	-.290	.101	.020	-.625
350	357	-.290	.101	.048	-.613
350	358	-.439	.105	-.123	-.861
350	359	-.282	.104	.038	-.735
350	360	-.276	.106	.051	-.740
350	361	-.282	.107	.050	-.729
350	362	-.256	.094	.060	-.592
350	363	-.288	.104	.037	-.634
350	364	-.287	.105	.037	-.646
350	365	-.296	.106	.015	-.657
350	366	-.424	.098	-.094	-.764
350	401	-.295	.126	.258	-.788
350	402	-.355	.147	.179	-.879
350	403	-.271	.106	.099	-.599
350	404	-.266	.094	.048	-.555
350	405	-.298	.119	.110	-.913
350	406	-.251	.115	.125	-.742
350	407	-.253	.123	.147	-.740
350	408	-.222	.100	.186	-.573
350	409	-.215	.087	.057	-.519
350	410	-.218	.097	.091	-.551
350	411	-.210	.097	.080	-.533
350	412	-.247	.100	.074	-.559

APPENDIX A -- PRESSURE DATA:

BASS BROTHERS BUILDING - PHASE II, DALLAS

WD	TAP	CPMEAN	CPRMS	CPMAX	CPMIN
350	413	-.286	.103	.054	-.656
350	414	-.218	.083	.104	-.511
350	415	-.224	.096	.135	-.569
350	416	-.214	.095	.131	-.561
350	417	-.238	.096	.088	-.611
350	418	-.227	.086	.087	-.552
350	419	-.242	.098	.104	-.614
350	420	-.258	.105	.092	-.693
350	421	-.290	.112	.074	-.790
350	422	-.231	.086	.069	-.524
350	423	-.295	.099	.020	-.635
350	424	-.447	.105	-.062	-.813
350	425	-.241	.096	.103	-.614
350	426	-.240	.095	.074	-.588
350	427	-.270	.097	.016	-.600
350	428	-.312	.093	-.014	-.666
350	429	-.329	.109	-.014	-.854
350	430	-.275	.099	.029	-.653
350	431	-.295	.100	.012	-.682
350	432	-.269	.091	.064	-.575
350	433	-.269	.101	.094	-.602
350	434	-.272	.101	.083	-.597
350	435	-.300	.103	.046	-.699
350	436	-.290	.094	-.034	-.697

WD	TAP	CPMEAN	CPRMS	CPMAX	CPMIN
350	437	-.289	.104	.025	-.725
350	438	-.313	.114	.129	-.737
350	439	-.310	.113	.119	-.895
350	440	-.320	.114	.095	-.835
350	441	-.493	.115	-.135	-.863
350	442	-.327	.114	.025	-.745
350	443	-.304	.114	.067	-.718
350	444	-.310	.114	.042	-.705
350	445	-.477	.116	-.116	-.890
350	446	-.321	.110	-.005	-.701
350	447	-.322	.110	.009	-.689
350	448	-.326	.112	.004	-.716
350	449	-.570	.147	-.146	-1.352
350	450	-.388	.120	.041	-.854
350	451	-.328	.126	.085	-.898
350	452	-.294	.118	.159	-.695
350	453	-.413	.135	.008	-1.110
350	454	-.324	.112	.124	-.967
350	455	-.293	.151	.205	-.809
350	456	-.441	.140	-.025	-.999
350	457	-.507	.109	-.181	-.891
350	458	-.339	.110	-.033	-.720
350	459	-.424	.147	.022	-1.023
350	460	-.404	.131	.003	-.927

WD	TAP	CPMEAN	CPRMS	CPMAX	CPMIN
350	461	-.470	.107	-.107	-.866
350	801	-.449	.154	.048	-.971
350	802	-.388	.138	.010	-.931
350	803	-.018	.113	.425	-.575
350	804	-.456	.105	-.059	-.831
350	805	-.289	.107	.087	-.673
350	806	-.396	.129	.017	-.949
350	807	-.233	.112	.124	-.624
350	808	-.023	.102	.290	-.340
350	809	-.117	.135	.356	-.646
350	810	-.303	.116	.024	-.765
350	901	-.310	.100	.011	-.731
350	902	-.257	.085	.025	-.572
350	903	-.114	.109	.289	-.491
350	904	-.240	.121	.146	-.751
350	905	-.234	.109	.108	-.692
350	906	-.264	.122	.161	-.768
350	907	-.237	.111	.090	-.670
350	908	-.426	.167	-.007	-.992
350	909	-.282	.105	.045	-.631
350	910	-.223	.129	.237	-.635
350	911	-.300	.115	.074	-.752
350	912	-.300	.112	.040	-.668
350	913	-.477	.143	-.012	-.943